PRODUCT BRIEF

XENSIV™ KP23x

Infineon's integrated pressure sensor IC for Barometric Air Pressure (BAP) measurement applications

The KP23x automotive pressure sensor family is a miniaturized absolute pressure sensor IC based on the capacitive principle. It is surface-micromachined with a monolithically integrated, fully digital signal conditioning circuit, implemented in state-of-the-art 0.5 µm BiCMOS technology, with analog output signal, broken-wire detection, optional clamping, and other useful features.

The Barometric Air Pressure (BAP) is an important parameter for computing the air-fuel ratio provided to the engine and for controlling spark advance to optimize engine efficiency for diesel and gasoline engines.

Other automotive applications include turbo protection and seat comfort, using a virtual differential pressure measurement.

The XENSIV™ KP23x pressure sensor is housed in a PG-DSOF-8-16 package with an integrated lid. Its high-accuracy and robust design makes it a perfect fit for automotive applications, including Manifold Air Pressure (MAP) measurements of up to 400 kPa. The KP21x/KP22x is a similar product family also targeting automotive applications.

Key features

- Absolute air pressure measurement based on capacitive principle
- Excellent accuracy of 1.0 kPa over a wide temperature range
- Ratiometric analog output
- Output clamping (optional)
- Pressure range from 40 to 165 kPa
- Temperature range from -40 to 125°C
- Open bond detection for supply and GND (OBD)
- Inverse polarity protection
- Green SMD package (PG-DSOF-8-16)

Typical applications

- Engine management
- Altimeters
- Industrial control
- Weather reporting devices
- Medical applications

Application circuit for the pressure sensor system

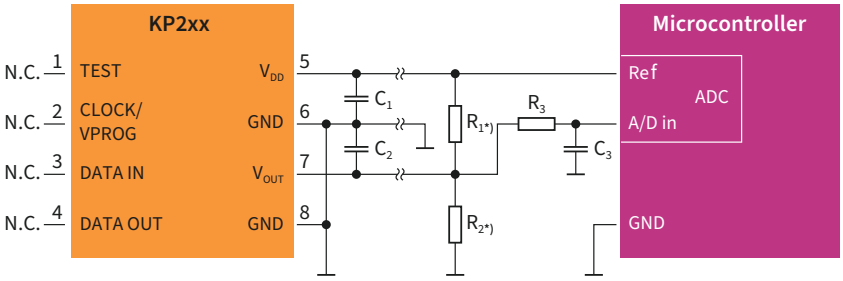

*) R_1 and R_2 alternatively

Infineon offers an extensive product portfolio for diesel engine management systems, from micromachined sensors to smart power ICs and microcontrollers. The XENSIV™ KP23x is an integrated pressure sensor for barometric pressure measurement and is a benchmark in terms of reliability, performance, and integration level.



www.infineon.com/bap-map-pressure

High integrated sensors – single chip

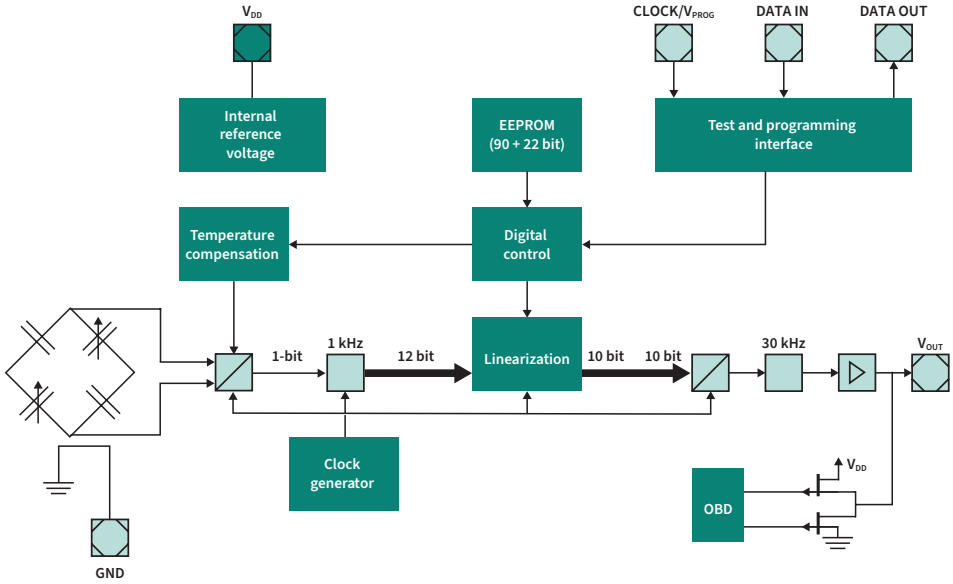

Parameter	Derivatives				Unit
	KP234	KP235	KP236	KP236N6165	
Basic accuracy	1.5% F:S	1.2	1.0	1.0	kPa
Transfer function pressure min.	15	40	40	60	kPa
Transfer function pressure max.	115	115	115	165	kPa
Transfer voltage pressure min.	0.2	0.5	0.5	0.2	V
Transfer voltage pressure max.	4.7	4.5	4.5	4.8	V
Order code	SP000700772	SP000700776	SP000700780	SP000700784	

Published by
Infineon Technologies AG
Am Campeon 1-15, 85579 Neubiberg
Germany

© 2026 Infineon Technologies AG.
All rights reserved.

Public

Date: 05/2026

Important notice
Products are sold or provided and delivered by Infineon Technologies AG and its affiliates ("Infineon") subject to the terms and conditions of the frame supply contract or other written agreement(s) executed by a customer and Infineon or, in the absence of the foregoing, the applicable Sales Conditions of Infineon. General terms and conditions of a customer or deviations from applicable Sales Conditions of Infineon shall only be binding for Infineon if and to the extent Infineon has given its express written consent.

To the fullest extent permissible pursuant to applicable law, with respect to any information given in this document or in any associated documentation, Infineon disclaims all warranties and liabilities of any kind, whether express or implied, including but not limited to any warranties of merchantability, suitability of the products for the intended application or the specific use, or non-infringement of third-party rights.

Subject to the development and release of the products for series supply by Infineon, the technical specifications of the products are set forth in the relevant final datasheet provided by Infineon and, if any, agreed and signed specifications. Infineon's customers are required to evaluate the suitability of the products for the intended application or specific use.

The information given in this document is subject to change by Infineon at any time without notice.

Scan QR code and explore offering
www.infineon.com/sensors