PRODUCT BRIEF

XENSIV™ KP21x

Infineon's integrated pressure sensor IC for manifold air pressure (MAP) measurement applications

The Manifold Air Pressure (MAP) is an important parameter for calculating the air-fuel ratio supplied to the engine, enabling better combustion, higher efficiency, and reduced emissions. For cost-sensitive engine systems, MAP sensors have the potential to complement or even replace Mass Air Flow (MAF) sensors. Additionally, manifold pressure data can be used to diagnose leaks and malfunctions in the Exhaust Gas Recirculation (EGR) system.

In automotive applications, where high production volumes are common, there is significant interest in sensors that offer precision, affordability, and full integration. In this context, the KP21x MAP sensor family is an optimal solution for aspirated or turbocharged diesel and gasoline engine management systems. Specifically, the KP212x series is tailored for the 2-wheeler market, enabling lower emissions, better combustion, and higher efficiency.

To address the need for more robust solutions in challenging environmental conditions, Infineon also offers KP21x variants with increased protective gel (IG), improving durability and robustness in harsh operating environments.

Infineon provides a comprehensive portfolio of products for diesel engine management systems, ranging from micro-machined sensors to smart power ICs and microcontrollers. The KP21x pressure sensor, as an integrated solution for manifold pressure measurement, stands out as a benchmark for reliability, performance, and integration.

Application circuit for the pressure sensor system

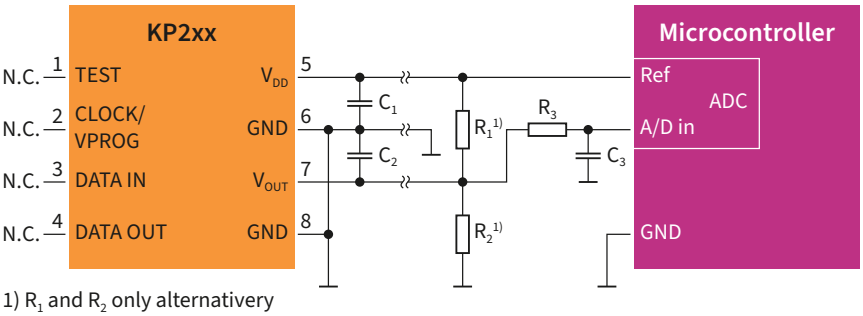

1) R_1 and R_2 only alternativery

Key features

- Absolute air pressure measurement
- Excellent accuracy of up to 1.0 kPa over a wide temperature range
- Ratiometric analog output
- Fully compensated ratiometric analog output signal
- Pressure ranges from 15 to 150 kPa
- Temperature range (ambient) from -40°C to +140°C
- SMD package (PG-DSOF-8)
- Optional output clamping
- Complete product family: KP212, KP214, KP215, KP216, KP219

Key applications

- Automotive applications
  - **MAP/TMAP** (Manifold Air Pressure)
  - **EGR** (Exhaust Gas Recirculation)
  - **ORVR** (Onboard Refueling Vapor Recovery)
  - **NGV** (Natural Gas Vehicle)
  - **DPF** (Diesel Particulate Filter)
  - **GPF** (Gasoline Particulate Filter)
- Industrial control
- Consumer applications
- Medical applications



MAP RoHS Hal AEC Qualified

www.infineon.com/bap-map-pressure

Highly integrated sensors – single chip

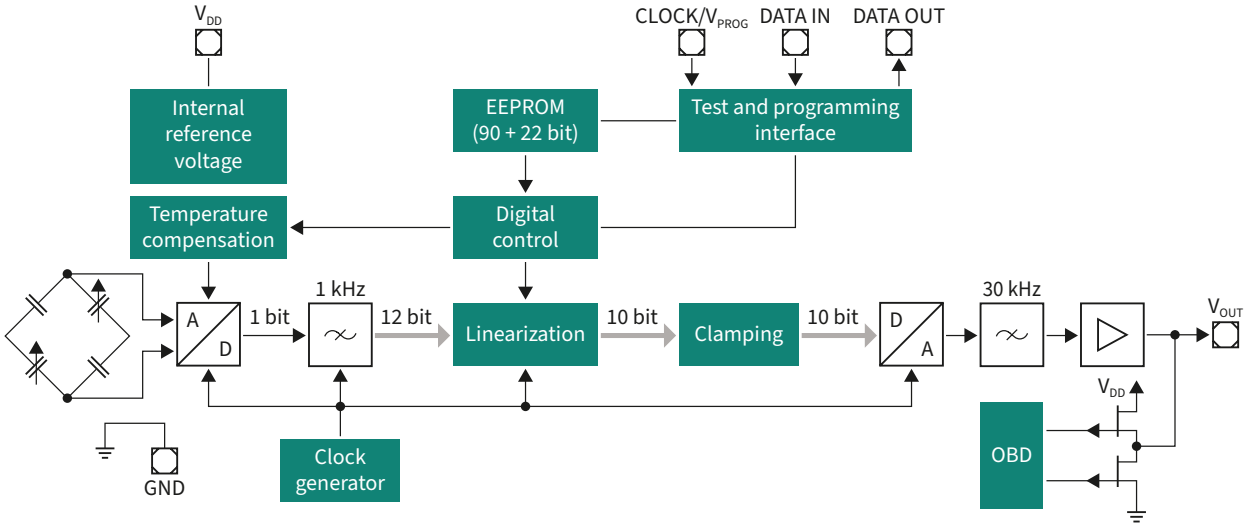

Product summary

Parameter	Range			Unit
	min.	typ.	max.	
Accuracy			1.0	% F.S.
Pressure range	10		150	kPa
Sensitivity	40		88	mV/kPa
Supply voltage	4.5	5.0	5.5	V
Output current			1.0	mA
Output voltage	0.1		4.85	V
Operating temperature	-40		+140	°C
Programmable transfer functions				
Transfer function pressure min.	15		60	kPa
Transfer function pressure max.	100		150	kPa
Transfer function voltage min.	0.1		0.5	V
Transfer function voltage max.	4.5		4.85	V

Published by
Infineon Technologies AG
Am Campeon 1-15, 85579 Neubiberg
Germany

© 2025 Infineon Technologies AG.
All rights reserved.

Public

Date: 12/2025

Important notice
Products are sold or provided and delivered by Infineon Technologies AG and its affiliates ("Infineon") subject to the terms and conditions of the frame supply contract or other written agreement(s) executed by a customer and Infineon or, in the absence of the foregoing, the applicable Sales Conditions of Infineon. General terms and conditions of a customer or deviations from applicable Sales Conditions of Infineon shall only be binding for Infineon if and to the extent Infineon has given its express written consent.

To the fullest extent permissible pursuant to applicable law, with respect to any information given in this document or in any associated documentation, Infineon disclaims all warranties and liabilities of any kind, whether express or implied, including but not limited to any warranties of merchantability, suitability of the products for the intended application or the specific use, or non-infringement of third-party rights.

Subject to the development and release of the products for series supply by Infineon, the technical specifications of the products are set forth in the relevant final datasheet provided by Infineon and, if any, agreed and signed specifications. Infineon's customers are required to evaluate the suitability of the products for the intended application or specific use.

The information given in this document is subject to change by Infineon at any time without notice.

Scan QR code and explore offering
www.infineon.com