PRODUCT BRIEF

KIT-CYW55310-EVAL

AIROC™ CYW55310 Bluetooth® Audio Development Kit

The KIT-CYW55310-EVAL enables the evaluation, prototyping, and development of a wide variety of Internet of Things (IoT) and audio applications using Infineon's AIROC™ CYW55310 Bluetooth® Audio SoC, a single-chip low-power device featuring Bluetooth® and Bluetooth® Low Energy 5.3. The device can support Bluetooth® Low Energy audio, with LC3 codec running on the device, for typical smart watch audio applications. A pair of time-division multiplexing (TDM) enables a flexible interface for various audio use cases, and a pulse-density modulation (PDM) interface is available for connecting digital microphones.

The AIROC™ CYW55310 operates over the −40°C to +85°C temperature range and is available in a 0.35 mm pitch WLBGA package with these major features:

- 3x Serial Control Blocks (SCB) and supporting I2C/SPI/UART
- 9x TCPWM blocks
- PDM interface for digital microphone support
- 12-bit ADC with seven-channel mux input for analog microphone support or seven channels of DC sensing
- 2x TDM interfaces enable a flexible interface for various audio use cases
- 4-wire UART

The KIT-CYW55310-EVAL together with ModusToolbox™ software, and tools form a powerful but easy-to-use toolset that helps to create Bluetooth® enabled IoT and audio solutions. It also offers footprint compatibility with Arduino shields. The development environment is compatible with Windows, macOS, and Linux operating systems. In addition, the kit features an onboard programmer/debugger (KitProg3).

ModusToolbox™ is a complementary software development ecosystem that includes the Eclipse IDE for ModusToolbox™, AIROC™ BTSTACK, Bluetooth® SDK, and Wi-Fi SDK to develop applications with Infineon IoT products. Eclipse IDE for ModusToolbox™ is a multi-platform, integrated development environment (IDE) used to create new applications, update application code, change middleware settings, and program or debug applications.

ModusToolbox™ helps enable and configure device resources and middleware libraries, write C source code, and program and debug the device. The build system infrastructure includes the new project creation wizard that can run independently of the Eclipse IDE, the make infrastructure, and other tools. Compiler, RTOS, and ecosystem can be chosen without compromising usability or access to industry leading AIROC™ Wi-Fi and Bluetooth®, CAPSENSE™ Human Machine Interface (HMI), security, among other available features.

For more Information visit: www.infineon.com/KIT-CYW55310-EVAL

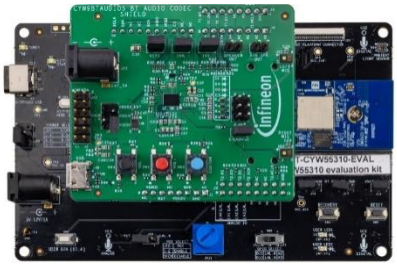

Kit Contents

- CYW55310 evaluation board (CYW9CPM2BASE1 + CYW55310 M.2 card)
- Audio shield board
- USB-A to USB-C cable
- Quick start guide via QR code

Benefits

- CYW55310 M.2 carrier module (Vela IF310 M.2 card from Ezurio)
- Audio shield board (CYW9BTAU-DIO5)
- Expansion headers compatible with Arduino shields
- One user button and two user LEDs
- One analog potentiometer and one digital ambient light sensor
- One user button and two user LEDs
- Onboard USB Type-C connector for powering, programming, and debugging
- Easy evaluation using ModusToolbox™ and code examples

PRODUCT BRIEF

Block diagram

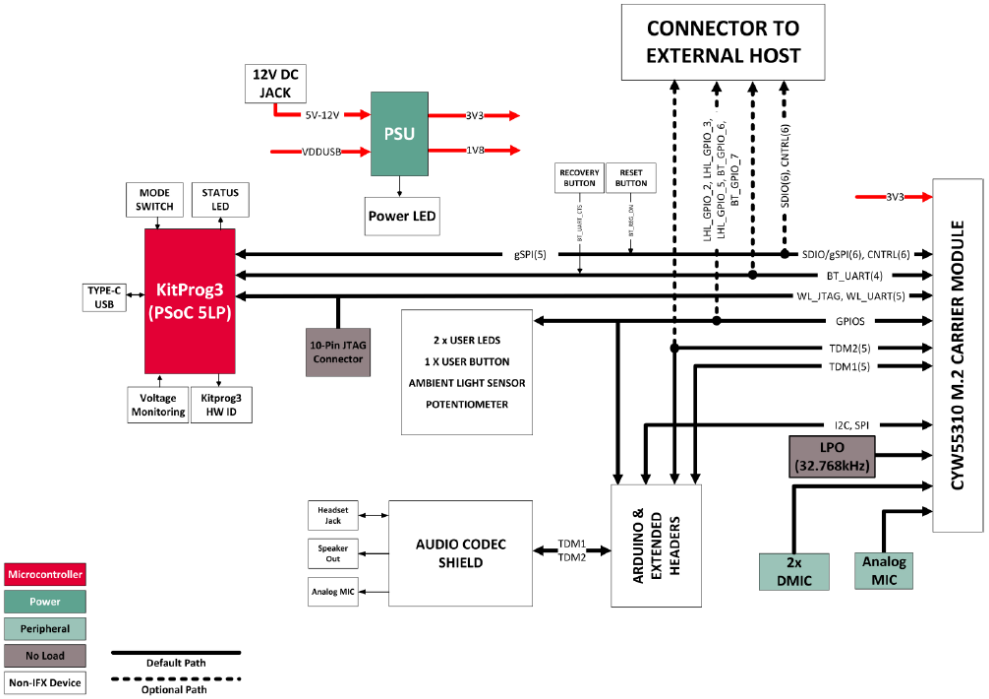

Part Numbers

Part Number	Description	Temp (Ta)	Package
KIT-CYW55310-EVAL	AIROC™ CYW55310 Bluetooth® Audio Development Kit	-40 to 85°C	Kit
CYW55310IUBGT	AIROC™ CYW55310 Bluetooth® Audio SoC	-40 to 85°C	143-ball WLBGA (3.57×5.32x0.35 mm)
Vela IF310	AIROC™ CYW55310 based SiP modules from Ezurio	-40 to 85°C	SMT (12x16x2 mm)

Key Applications

Wearables	Smart watch audio applications, hearing aid, wireless earbuds
IoT	Audio applications, wireless audio, accessory applications, speakers, soundbars, conference systems, and audio-sharing gateways

Published by
Infineon Technologies AG
Am Campeon 1-15, 85579 Neubiberg
Germany

© 2026 Infineon Technologies AG
All rights reserved.

Public

Version: V1.0_EN
Date: 06/2026

Scan QR code and explore offering
www.infineon.com

Please note!
This Document is for information purposes only and any information given herein shall in no event be regarded as a warranty, guarantee or description of any functionality, conditions and/or quality of our products or any suitability for a particular purpose. With regard to the technical specifications of our products, we kindly ask you to refer to the relevant product data sheets provided by us. Our customers and their technical departments are required to evaluate the suitability of our products for the intended application.

We reserve the right to change this document and/or the information given herein at any time.

Additional information
For further information on technologies, our products, the application of our products, delivery terms and conditions and/or prices, please contact your nearest Infineon Technologies office (www.infineon.com).

Warnings
Due to technical requirements, our products may contain dangerous substances. For information on the types in question, please contact your nearest Infineon Technologies office.

Except as otherwise explicitly approved by us in a written document signed by authorized representatives of Infineon Technologies, our products may not be used in any life-endangering applications, including but not limited to medical, nuclear, military, life-critical or any other applications where a failure of the product or any consequences of the use thereof can result in personal injury.