PRODUCT BRIEF

XENSIV™ - IM63D135A

Automotive qualified MEMS microphone

The Infineon IM63D135A is part of the 2nd generation automotive qualified high- performance MEMS microphones with a high Acoustic-Overload-Point (AOP) of 135 dB SPL. The device offers a digital PDM interface in a 3.50 x 2.65 x 0.98 mm3 package.
Infineon technical leadership in MEMS technology ensures best in class performance for this digital microphone. Due to its very high AOP the IM63D135A ensures stable performance in extremely loud environments. It is designed to serve as a specialized microphone for all exterior automotive applications.
The digital microphone ASIC contains a microphone specific distortion compensation algorithm for optimal THD (Total-Harmonic-Distortions) performance at higher sound pressure levels (SPL). This results in high linearity of the output signal and low distortions very close to the AOP.
Infineon's MEMS technology is based on a miniaturized microphone design. With its low equivalent noise floor, the microphone is no longer the limiting factor in the audio signal chain and enables high performance acoustic automotive applications.
The tight manufacturing tolerance, combined with the fact that each device is calibrated with an advanced Infineon calibration algorithm, results in small sensitivity and phase matching tolerances. This makes it well suited for beam forming arrays and multi-microphone applications.
The device is designed for exterior applications where a high acoustic overload point is required.



Key features

- Automotive qualification according to AEC-Q103-003
- Very high Acoustic Overload Point
- (AOP) of 135 dB SPL
- Flat frequency response
- down to 7 Hz
- Close sensitivity and phase matching
- Enlarged operating temperature range up to +105°C
- Acoustic characterization data over the whole temperature range available
- Digital PDM interface
- Environmental robust up to IP57

Key benefits

- Optimized for exterior applications due to very high AOP
- Reduced effort, risk, and costs of qualifications due to full AEC-Q103 qualification on device level
- Enabling best ANC performance due to flat frequency response down to 7 Hz and small group delay
- Individually calibrated microphone gives narrow sensitivity matching for optimal beam forming performance
- Extended availability to match long automotive design cycles
- Flexible use in different application environments due to increased operating temperature range



PRODUCT BRIEF

Potential applications

– Siren detection
– Road condition detection
– External voice control
– Active and road noise cancellation (ANC / RNC)

Block diagram

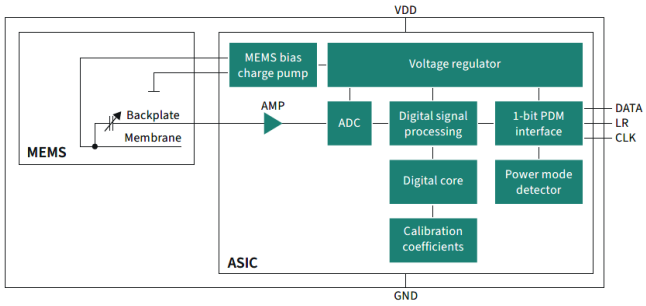

Product table

Parametrics	IM63D135A
Signal to Noise Ratio (SNR)	63 dB(A)
Acoustic Overload Point (AOP)	135 dB SPL
Total Harmonic Distortion (THD) @ 1%	~129 dB SPL
Sensitivity @ 1 kHz, 94 dB SPL	-41±1 dB(A)
Low Frequency Roll Off (LFRO)	7 Hz
Interface	Digital PDM
Current consumption	1100 µA
Supply voltage	1.62 to 3.6 V
Port location	Bottom port
Package dimensions	3.5 x 2.65 x 0.98 mm3
Ordering number	SP006031385

Published by
Infineon Technologies AG
Am Campeon 1-15, 85579 Neubiberg
Germany

© 2023 Infineon Technologies AG
All rights reserved.

Public

Date: 07/2024

Please note!
This Document is for information purposes only and any information given herein shall in no event be regarded as a warranty, guarantee or description of any functionality, conditions and/or quality of our products or any suitability for a particular purpose. With regard to the technical specifications of our products, we kindly ask you to refer to the relevant product data sheets provided by us. Our customers and their technical departments are required to evaluate the suitability of our products for the intended application.

We reserve the right to change this document and/or the information given herein at any time.

Additional information
For further information on technologies, our products, the application of our products, delivery terms and conditions and/or prices, please contact your nearest Infineon Technologies office (www.infineon.com).

Warnings
Due to technical requirements, our products may contain dangerous substances. For information on the types in question, please contact your nearest Infineon Technologies office.

Except as otherwise explicitly approved by us in a written document signed by authorized representatives of Infineon Technologies, our products may not be used in any life-endangering applications, including but not limited to medical, nuclear, military, life-critical or any other applications where a failure of the product or any consequences of the use thereof can result in personal injury.

Scan QR code and explore offering
www.infineon.com