PRODUCT BRIEF

EZ-USB™ SX3 – FIFO to USB 5Gbps controller

USB 5Gbps easily configured for UVC/UAC or USB3 Vision applications

EZ-USB™ SX3 is a USB 5Gbps peripheral controller optimized for UVC (USB Video Class) applications such as 1080p HDMI video capture or high-performance camera. It can be easily configured by tuning a wide range of parameters such as VID/PID, product strings, serial numbers, FIFO settings, GPIOs, USB endpoints and auxiliary interface via its dedicated easy-to-use graphic user interface (GUI) utility. The utility can also produce USB Video Class (UVC) and USB Audio Class (UAC) configurations that are spec-compliant without the need for firmware development, significantly shortening the time-to-market for end products. In addition to the configurable parameters, developers can also utilize the integrated 32-bit ARM9 processor to further customize their devices, differentiating in the market and gaining a competitive advantage.

Key features

- USB 5Gbps PHY compliant with USB 3.2 Gen 1
- Three physical endpoints
- 32-bit CPU ARM926EJ core with 200 MHz operation with 512 KB embedded SRAM
- Less than 60 µA with VBATT on and 20 µA with VBATT off
- Additional connectivity to SPI boot flash and I2C slaves at 100/400 kHz and 1 MHz
- Supports UVC, UAC, and USB vendor class protocol

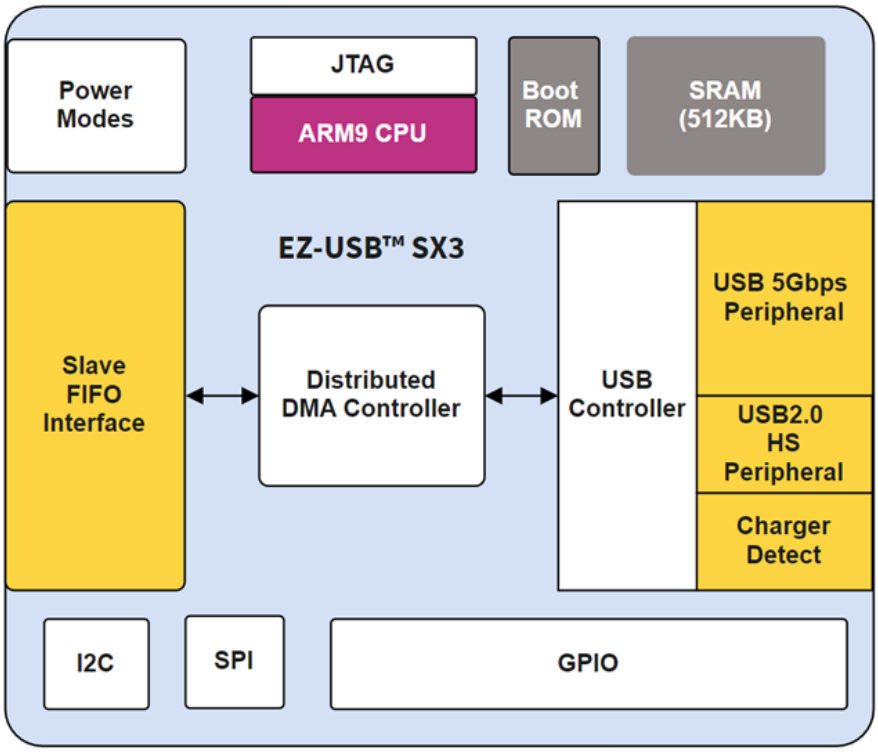

Key benefits

- Lowest total cost (bandwidth per dollar) solution for any high-speed system
- Turnkey solutions on industrial standards
- No firmware development needed
- Easy customization via configuration utility
- Quick time-to-market with low development costs



www.infineon.com/ez-usb-sx3

Evaluation kit

CY-SD4210 EZ-USB™ SX3 HDMI 4K to USB 5Gbps demo kit

EZ-USB™ SX3 HDMI 4K to USB 5Gbps Demo Kit is based on Infineon's EZ-USB™ SX3 and an FPGA to capture a video stream from the HDMI interface and transfer it via USB 5Gbps connection to a PC. The kit can be configured as a USB Video Class (UVC) device or a USB3 Vision device easily via EZ-USB™ SX3 Configuration Utility and supports up to 4K 30 frame-per-second uncompressed video stream.



Product table

Product	USB standard	USB speed [Gbit/s]	I/O type	Operating temperature range [°C]	Operating voltage min [V]	Operating voltage max [V]
CYUSB3015-BZXIT	USB 3.0	5	8/16/24/32-bit GPIF, DMA, GPIO, I2C, SPI	-40 to 85	1,7	3,6
CYUSB3016-BZXI	USB 3.0	5	8/16/24/32-bit GPIF, DMA, GPIO, I2C, SPI	-40 to 85	1,7	3,6
CYUSB3017-BZXIT	USB 3.0	5	8/16/24/32-bit GPIF, DMA, GPIO, I2C, SPI	-40 to 85	1,7	3,6
CYUSB3015-BZXC	USB 3.0	5	8/16/24/32-bit GPIF, DMA, GPIO, I2C, SPI	0 to 70	1,7	3,6
CYUSB3017-BZXC	USB 3.0	5	8/16/24/32-bit GPIF, DMA, GPIO, I2C, SPI	0 to 70	1,7	3,6
CYUSB3015-BZXCT	USB 3.0	5	8/16/24/32-bit GPIF, DMA, GPIO, I2C, SPI	0 to 70	1,7	3,6
CYUSB3017-BZXI	USB 3.0	5	8/16/24/32-bit GPIF, DMA, GPIO, I2C, SPI	-40 to 85	1,7	3,6
CYUSB3016-BZXC	USB 3.0	5	8/16/24/32-bit GPIF, DMA, GPIO, I2C, SPI	0 to 70	1,7	3,6
CYUSB3016-BZXIT	USB 3.0	5	8/16/24/32-bit GPIF, DMA, GPIO, I2C, SPI	-40 to 85	1,7	3,6
CYUSB3015-BZXI	USB 3.0	5	8/16/24/32-bit GPIF, DMA, GPIO, I2C, SPI	-40 to 85	1,7	3,6
CYUSB3017-BZXCT	USB 3.0	5	8/16/24/32-bit GPIF, DMA, GPIO, I2C, SPI	0 to 70	1,7	3,6
CYUSB3016-BZXCT	USB 3.0	5	8/16/24/32-bit GPIF, DMA, GPIO, I2C, SPI	0 to 70	1,7	3,6

www.infineon.com

Published by
Infineon Technologies AG
Am Campeon 1-15, 85579 Neubiberg
Germany

© 2023 Infineon Technologies AG
All rights reserved.

Public

Date: 09/2023

Please note!
This Document is for information purposes only and any information given herein shall in no event be regarded as a warranty, guarantee or description of any functionality, conditions and/or quality of our products or any suitability for a particular purpose. With regard to the technical specifications of our products, we kindly ask you to refer to the relevant product data sheets provided by us. Our customers and their technical departments are required to evaluate the suitability of our products for the intended application.

We reserve the right to change this document and/or the information given herein at any time.

Additional information
For further information on technologies, our products, the application of our products, delivery terms and conditions and/or prices, please contact your nearest Infineon Technologies office (www.infineon.com).

Warnings
Due to technical requirements, our products may contain dangerous substances. For information on the types in question, please contact your nearest Infineon Technologies office.

Except as otherwise explicitly approved by us in a written document signed by authorized representatives of Infineon Technologies, our products may not be used in any life-endangering applications, including but not limited to medical, nuclear, military, life-critical or any other applications where a failure of the product or any consequences of the use thereof can result in personal injury.