PRODUCT BRIEF

EZ-PD™ PMG1-B1

USB-C single-chip solution for battery-powered applications

EZ-PD™ PMG1-B1 is a single-chip solution integrating USB PD controller, high voltage microcontroller (MCU), buck-boost controller, battery charger, individual cell monitoring and protection. It enables the implementation of USB-C by replacing the main microcontroller and targets chargers that power from a high-voltage USB-C PD port and want to use an MCU to provide additional control capability. Applications include battery-powered appliances like power and garden tools, smart speakers, cameras, vacuum cleaners, cordless kitchen appliances, and personal care devices like hair dryers and electric shavers.

EZ-PD™ PMG1-B1 PD MCU supports a wide input voltage range of 4 V to 24 V with 40 V tolerance and programmable switching frequency (150 to 600 kHz) to deliver up to 100 W (20 V, 5 A) power to the USB-C port. This enables the charging of 2- to 5-cell batteries in an integrated USB-C PD MCU solution. With its high level of integration, the MCU provides a footprint-optimized single-chip solution and significantly reduces the bill-of-material (BOM) for customers.

To support the development of applications implementing the MCU, Infineon provides developers with the ModusToolbox™ firmware development environment. Together with the appropriate board support package (BSP) and the EZ-PD™ PMG1 software development kit (SDK), it eliminates the need for an expert-level understanding of the intricacies of the device resources.

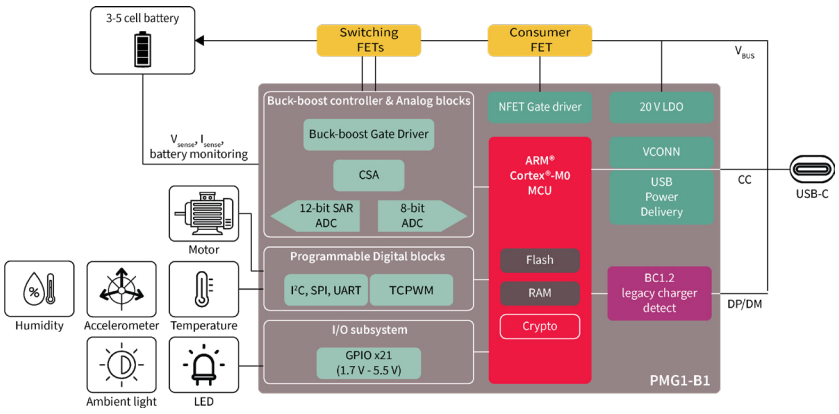

Key features

- Supports USB-C PD 3.1 spec up to 100 W
- USB-C PD sink, USB-C PD DRP
- Fully programmable ARM® Cortex® M0, 128 KB flash, 16 KB SRAM
- DCDC buck-boost
- Battery charge controller
- Support for CC / CV mode charging
- Support for 2S-5S cells
- Customizable battery charging algorithm
- High voltage protection circuits
- Highly configurable value-added features
- SDK on ModusToolbox™ and PMG1 kits

Benefits

- Reduced BOM & area
- Simplified development with multiple applications supported in the SDK
- Highly programmable solution
- Simplified customization with proprietary software suite
- Fully interoperable USB-C PD stack
- Hardware protection

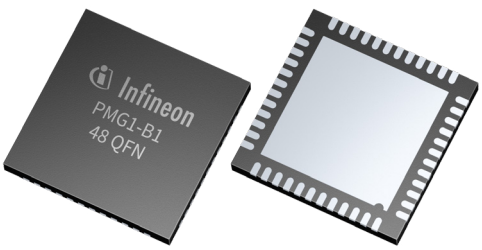

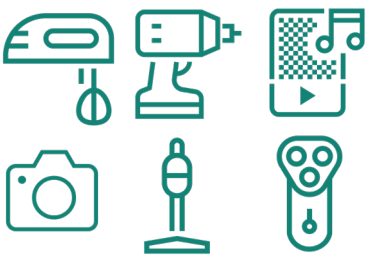

www.infineon.com/ez-pd-pmg1-b1

PMG1-B1 portable kitchen appliance application example

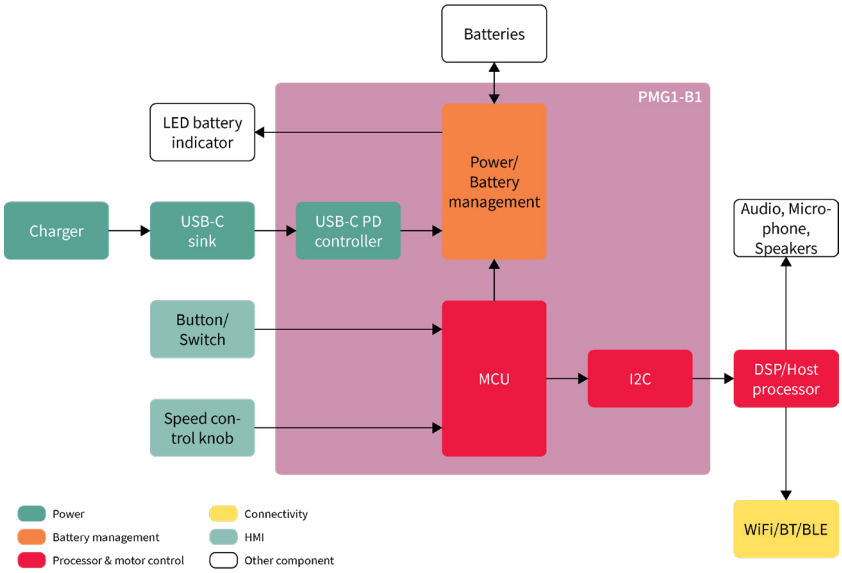

Getting started with EZ-PD™ PMG1-B1

EVAL_PMG1_B1_DRP is an evaluation board for EZ-PD™ PMG1-B1 USB-C PD MCU. It can be used to sink up to 100 W and source up to 27 W. The kit can also be used to charge 2 cell-5 cell batteries, and the battery charging algorithm is implemented as part of EZ-PD™ PMG1-B1 SDK.

1 **Purchase the EVAL_PMG1_B1_DRP kit**

2 **Download ModusToolbox™ suite**

3 **Download the Getting Started EZ-PD™ PMG1 app note to learn more**

Published by
Infineon Technologies AG
Am Campeon 1-15, 85579 Neubiberg
Germany

© 2023 Infineon Technologies AG.
All rights reserved.

Public

Document number:
B191-I1467-V1-7600-EU-EC
Date: 01/2024

Scan QR code and explore offering
www.infineon.com

Please note!
This Document is for information purposes only and any information given herein shall in no event be regarded as a warranty, guarantee or description of any functionality, conditions and/or quality of our products or any suitability for a particular purpose. With regard to the technical specifications of our products, we kindly ask you to refer to the relevant product data sheets provided by us. Our customers and their technical departments are required to evaluate the suitability of our products for the intended application.

We reserve the right to change this document and/or the information given herein at any time.

Additional information
For further information on technologies, our products, the application of our products, delivery terms and conditions and/or prices, please contact your nearest Infineon Technologies office (www.infineon.com).

Warnings
Due to technical requirements, our products may contain dangerous substances. For information on the types in question, please contact your nearest Infineon Technologies office.

Except as otherwise explicitly approved by us in a written document signed by authorized representatives of Infineon Technologies, our products may not be used in any life-endangering applications, including but not limited to medical, nuclear, military, life-critical or any other applications where a failure of the product or any consequences of the use thereof can result in personal injury.