PRODUCT BRIEF

CARKIT 8T8R EDGE

Infineon's RASIC™ 77 GHz radar module for rapid prototyping and radar data recording: accelerating radar module development

Infineon's CARKIT 8T8R EDGE is a complete 77 GHz radar module for 4D imaging radars featuring all components required for radar operation – from RF to signal processing to interfacing to application software – and ready for mounting on vehicles. It enables rapid prototyping, software optimization, and radar data acquisition and recording accelerating time-to-market.

CARKIT 8T8R EDGE is designed to detect cars in distances beyond 380 m while offering fine resolution in azimuth and elevation.

CARKIT 8T8R EDGE has the flexibility to support various E/E architectures by delivering either processed data up to detections or by streaming raw ADC, FFT1 (Range), FFT2 (Doppler), or point cloud data over 1 Gbps Ethernet. The radar module is IPX4 protected, and the housing offers protrusions ready for vehicle mounting.

The CARKIT's embedded SW includes signal processing of range, Doppler and angle. The Radar GUI eases configuration and data visualization of the radar module.

CARKIT 8T8R EDGE enables applications in Advanced Driver Assisted Systems (ADAS) and Autonomous Driving (AD) systems
- Front radar, e.g. Adaptive Cruise Control (ACC), Automatic Emergency Braking (AEB)
- Corner and rear radar, e.g. Automated Lane Change Assist (ALCA), parking assist

For more details, please contact your local Infineon sales.

Key features

CARKIT 8T8R EDGE enables 4D imaging radars for front and corner.
- 8 transmit & 8 receive channels
- Long range detection of > 380 m for cars
- 4D radar with fine resolution in azimuth and elevation
- Supports various E/E architectures
  - Full-processing up to detections/point cloud or Direction-of-Arrival (DoA)
  - Streaming of Raw ADC data, FFT1, FFT2, point cloud
- Flexibility to replace wave-guide antenna with custom design
- GUI for easy setup and re-al-time configuration & visu-alization
- Ready for synchronization with camera sensors
- IPX4 protection
- Small form factor: 83 x 97 x 53 mm^3
- Ready for vehicle mounting



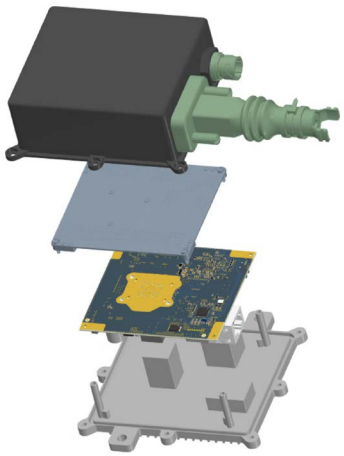

Key benefits

- Easy to use full radar module
- Ready for drive tests
- Enables rapid prototyping and radar data acquisition

www.infineon.com/radar-sensors

The CARKIT 8T8R EDGE is driven by Infineon's RASIC™ CTRX8188F radar MMIC and AURIX™ TC457 radar microcontroller.

The CTRX8188F featuring 8 transmitters and 8 receivers is part of Infineon's latest generation radar MMICs combining excellent RF performance, a high Signal-to-Noise Ratio (SNR) and linearity. The CARKIT 8T8R CENTR uses a waveguide antenna built with cutting-edge technology for optimal performance in transmitting RF signals.

AURIX™ TC457 radar microcontrollers feature a radar signal processing unit (SPU3.0), a Parallel Processing Unit (PPU at 400 MHz), Gbit Ethernet interfaces, security (HSM), and integrated non-volatile memory for on-chip program code storage.

The CARKIT software stack runs on the AURIX™ for configuring the CTRX8188F and processing the radar data delivering range, Doppler, distance and angle information.

Block diagram

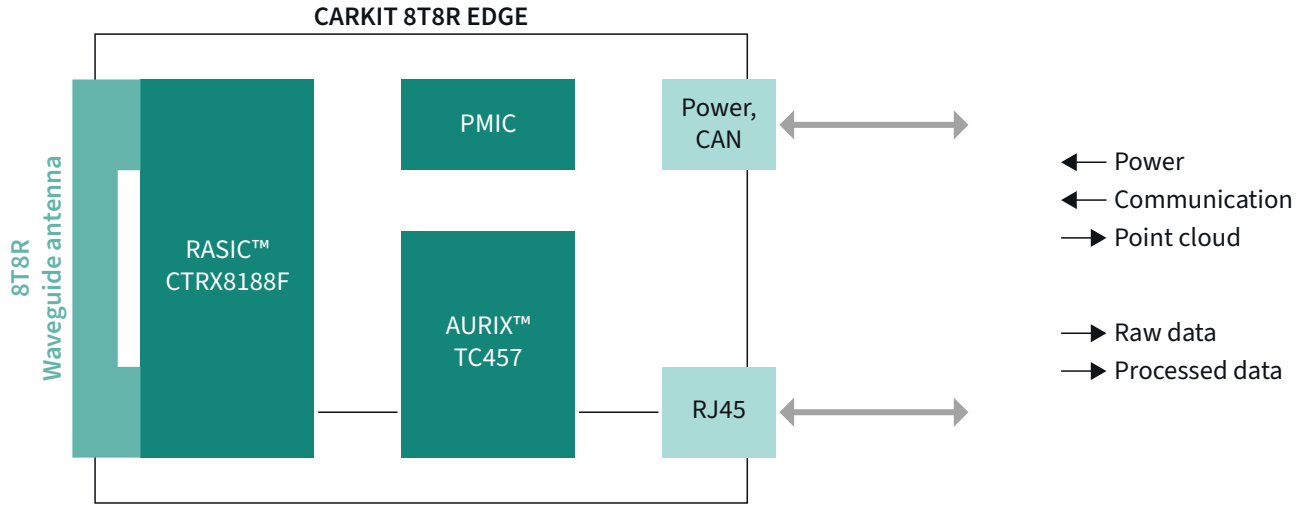

Published by
Infineon Technologies AG
Am Campeon 1-15, 85579 Neubiberg
Germany

© 2026 Infineon Technologies AG.
All rights reserved.

Public

Date: 10/2026

Important notice
Products are sold or provided and delivered by Infineon Technologies AG and its affiliates ("Infineon") subject to the terms and conditions of the frame supply contract or other written agreement(s) executed by a customer and Infineon or, in the absence of the foregoing, the applicable Sales Conditions of Infineon. General terms and conditions of a customer or deviations from applicable Sales Conditions of Infineon shall only be binding for Infineon if and to the extent Infineon has given its express written consent.

To the fullest extent permissible pursuant to applicable law, with respect to any information given in this document or in any associated documentation, Infineon disclaims all warranties and liabilities of any kind, whether express or implied, including but not limited to any warranties of merchantability, suitability of the products for the intended application or the specific use, or non-infringement of third-party rights.

Subject to the development and release of the products for series supply by Infineon, the technical specifications of the products are set forth in the relevant final datasheet provided by Infineon and, if any, agreed and signed specifications. Infineon's customers are required to evaluate the suitability of the products for the intended application or specific use.

The information given in this document is subject to change by Infineon at any time without notice.

Scan QR code and explore offering
www.infineon.com