PRODUCT BRIEF

XENSIV™ BGT60ATR24AIP

Infineon's 60 GHz radar sensor for automotive in-cabin sensing

The XENSIV™ BGT60ATR24AIP is an automotive-grade 60 GHz frequency-modulated continuous-wave (FMCW) radar sensor in a compact 8 × 8 mm² package with antenna-in-package (AIP) technology.

This fully integrated radar transceiver operates in the frequency band of 57.7 – 62.4 GHz. Its state-of-the-art integration includes 2 transmit channels, 4 receive channels, a low-noise phase-locked loop (PLL), an integrated loop filter (LF), a finite state machine (FSM) for ramp generation, an integrated Rx analog baseband (ABB) with analog-to-digital conversion (ADC), a built-in crystal oscillator (XOSC) and frequency doubler (FD), plus sensor ADCs for temperature and power monitoring. The digitized time-domain signals are forwarded via the quad serial peripheral interface (QSPI) to the application controller for further processing.

The radar's autonomous frame engine and fine grained power modes enable always available presence detection with minimum energy draw. This makes the XENSIV™ BGT60ATR24AIP suitable for scenarios requiring long standby times, such as parked vehicle, child presence monitoring or remote intrusion detection, while maintaining high detection confidence.

Operating across 57.7 – 62.4 GHz with up to 4.7 GHz chirp bandwidth, the device delivers precise range measurements and is capable of detecting extremely small motions. A 2-transmit / 4-receive multiple-input, multiple-output (MIMO) antenna arrangement enhances angle accuracy and target separation, ensuring reliable localization even in cluttered cabins and confined indoor spaces.

The compact antenna in package (AIP) design accelerates time to market, reduces system cost, and simplifies integration. Combined with high resolution and ultra low power operation, this makes it an ideal solution for short range use cases such as cabin occupancy, child presence alerts, driver monitoring, and intrusion/proximity detection.

The XENSIV™ BGT60ATR24AIP detects presence and micro-motions in occluded areas, such as footwells, under blankets, or when occupants are covered, by capturing subtle chest movements and respiratory pattern for vital-sign monitoring without a direct line of sight. This enables reliable seat-occupancy classification and child-presence detection, even in scenarios where other sensors, such as cameras or pressure sensors, may fail.

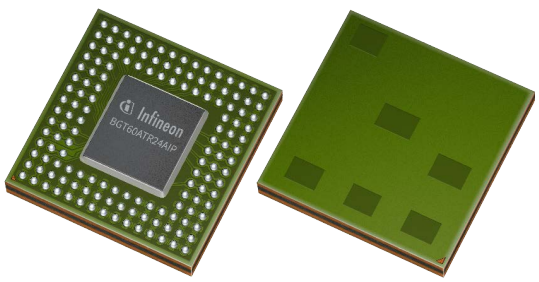

Key features

The BGT60ATR24AIP is an automotive-grade 60 GHz FMCW radar sensor with integrated antennas (AIP) designed for short-range in-vehicle sensing.

Key figures

- 8.0 × 8.0 × 0.86 mm³ package size
- 2 Tx / 4 Rx antennas-in-package
- 4.7 GHz chirp bandwidth
- 400 MHz/µs chirp slope
- 4 × 12-bit ADC channels
- 4 dBm output power
- 50 dB Tx-to-Rx isolation
- 50 MHz QSPI interface
- Built-in crystal oscillator
- 1.8 V and 3.3 V digital I/O support
- –40°C to +105°C operating temperature

Key benefits

- High resolution with 4.7 GHz bandwidth and steep chirps, enabling sub-centimeter range and micro-motion detection.
- Robust spatial sensing with 2 Tx / 4 Rx MIMO, providing reliable azimuth and elevation discrimination.
- Low power consumption thanks to an autonomous FSM and multi-domain power gating, which minimize MCU involvement.



www.infineon.com/radar-sensors

Target applications

- In-cabin monitoring and presence detection (e.g., occupancy, posture)
- Child presence detection and seatbelt reminders
- Driver monitoring (e.g., drowsiness, attention, micro motion detection)
- Intrusion and proximity detection (e.g., vehicle perimeter and interior)
- Gesture control and touchless HMI (e.g., infotainment, climate control)

Block diagram

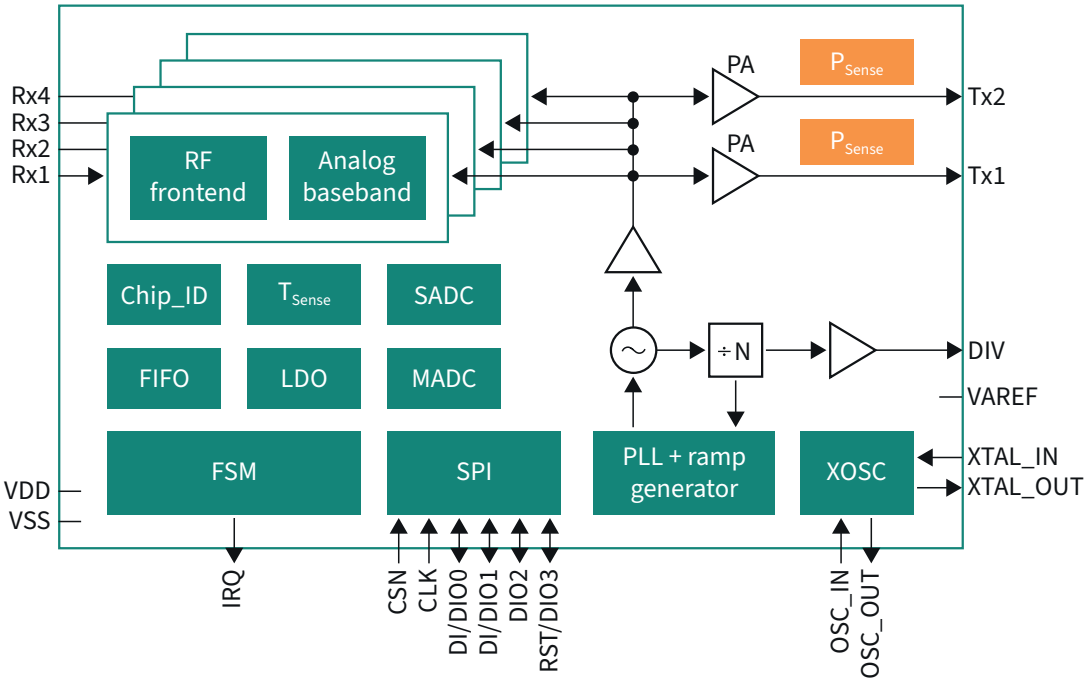

Product overview

Sales name	Orderable part number (OPN)	Frequency [GHz]	Qualification
BGT60ATR24AIP	BGT60ATR24AIPE6327XUMA1	57.7 – 62.4	AEC-Q100 (Grade 2)

Published by
Infineon Technologies AG
Am Campeon 1-15, 85579 Neubiberg
Germany

© 2026 Infineon Technologies AG.
All rights reserved.

Public

Date: 04 / 2026

Important notice
Products are sold or provided and delivered by Infineon Technologies AG and its affiliates ("Infineon") subject to the terms and conditions of the frame supply contract or other written agreement(s) executed by a customer and Infineon or, in the absence of the foregoing, the applicable Sales Conditions of Infineon. General terms and conditions of a customer or deviations from applicable Sales Conditions of Infineon shall only be binding for Infineon if and to the extent Infineon has given its express written consent.

To the fullest extent permissible pursuant to applicable law, with respect to any information given in this document or in any associated documentation, Infineon disclaims all warranties and liabilities of any kind, whether express or implied, including but not limited to any warranties of merchantability, suitability of the products for the intended application or the specific use, or non-infringement of third-party rights.

Subject to the development and release of the products for series supply by Infineon, the technical specifications of the products are set forth in the relevant final datasheet provided by Infineon and, if any, agreed and signed specifications. Infineon's customers are required to evaluate the suitability of the products for the intended application or specific use.

The information given in this document is subject to change by Infineon at any time without notice.

Scan QR code and explore offering
www.infineon.com