Product brief

AIROC™ CYW20820 Bluetooth® and Bluetooth® LE SoC

Reliable compute & low power - Dual Mode Bluetooth® for IoT applications

The AIROC™ CYW20820 dual mode Bluetooth® SoC builds upon the market-proven AIROC™ Bluetooth® and Bluetooth® LE family of SoCs. CYW20820 enables flexible, low-power, and high performance wireless connectivity for a variety of IoT applications. Infineon's AIROC™ Bluetooth® solutions offer higher value because of their flexible low power modes, superior RF performance, efficient MIPs, and a comprehensive SDK with extensive code examples.

The CYW20820 SoC provides reliable Bluetooth® and Bluetooth® LE connectivity and is 5.2 core spec compliant. With an integrated Arm® Cortex®-M4 processor with a floating point unit, CYW20820 SoC offers high performance compute suitable for a variety of applications. CYW20820 SoC is highly integrated with multiple serial interfaces, PWMs, and more. The CYW20820 is designed to support a wide spectrum of Bluetooth® use cases including home automation, sensors (medical, home, security, and industrial), lighting, Bluetooth® Mesh, or any Bluetooth® connected IoT application.

The AIROC™ CYW20820 is supported in the AIROC™ Bluetooth® SDK within ModusToolbox™ Software and Tools with copious code examples and documentation enablement for Bluetooth® LE data transfer, RFCOMM, Peripherals, and Bluetooth® Mesh use cases. Infineon also provides in-house AIROC™ CYW20820 globally certified modules for rapid time to market. For more information, please visit our AIROC™ CYW20820 web page.

AIROC™ CYW20820 benefits

- Reliable and robust connectivity with superior RF performance
- Compact solution size with integrated flash and high Tx output power
- High performance compute-at-the-edge for Bluetooth® use cases
- Built on market proven wireless IP offering maximum interoperability
- Rapid application development with fully supported SDK and copious code examples for Bluetooth® use cases
- Quickest path-to-market with globally certified CYW20820 modules
- Bluetooth® support in the Infineon Developer Community with direct access to online applications support engineers

Key features

MCU Features:

- 96-MHz ARM® Cortex®-M4 microcontroller unit MCU with floating point unit (FPU)
- 256kB on-chip flash
- 176kB on-chip RAM
- Runs Bluetooth® stack and application

Bluetooth® Sub-System Features:

- Complies with Bluetooth® core specification version 5.2 with LE 2-Mbps support
- Adaptive Frequency Hopping support
- Programmable Tx power to 11.5dBm
- Rx sensitivity -94 dBm (Bluetooth® LE)

Peripheral Features:

- 6x16-bit PWMs
- 22 GPIOs
- I2C, I2S, UART, SPI and PCM interfaces
- Up to 20x8 programmable key-scanning matrix interface

For more information, please go to https://www.infineon.com/cyw20820

AIROC™ CYW20820 Bluetooth® and Bluetooth® LE SoC

Reliable compute & low power - Dual Mode Bluetooth® for IoT applications

Key applications

Smart Home Automation	Residential Lighting, Household Appliances, Thermometer, Controller panel, Tools
Smart Building	Access / Occupancy Control, Air Quality / Ambient Monitoring, Commercial Lighting
Industrial	Factory Automation, Industrial Lighting, Sensor nodes, Sensor Hub / Control, Industrial Robotics, Asset Tracking
Medical / Healthcare	Blood Pressure Monitors, Thermometer, Nebulizers, CPAP Machines, Fall-Detect Devices, Hospital Sensors

Product summary

Name	Description	Temperature range [°C]	Package
CYW20820	AIROC™ CYW20820 dual mode Bluetooth® SoC	-30C to +85C	4.5mm x 4.5mm 62-ball FBGA
CYBT-243053-02 Standard Module	Fully certified AIROC™ CYW20820 Bluetooth® module with PCB Antenna	-30C to +85C	12 x 16.61 x 1.70 mm SMT
CYBT-253059-02 Small Size Module	Fully certified AIROC™ CYW20820 Bluetooth® module	-30C to +85C	11 x 11 x 1.70 mm SMT
CYBT-243068-02 Extended temp Module	Fully certified AIROC™ CYW89820 Bluetooth® module with 256kB on chip and 512kB serial flash	-30C to +105C	12 x 16.61 x 1.70 mm SMT

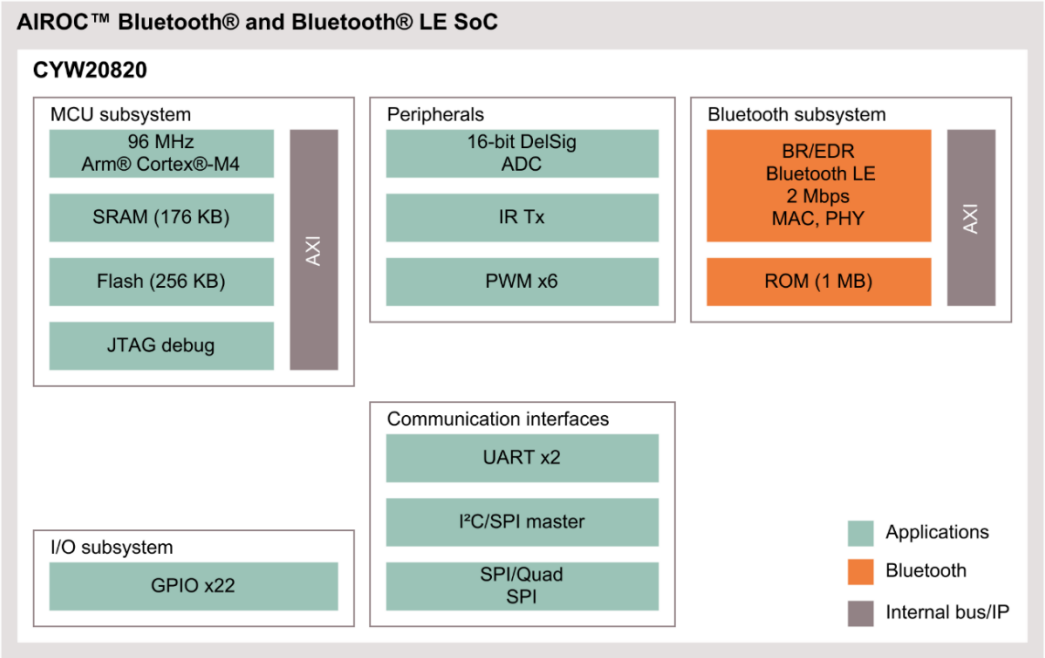

Published by
Infineon Technologies AG
81726 Munich, Germany

©2022 Infineon Technologies AG.
All Rights Reserved.

Date: 07/2022

Please note!
This Document is for information purposes only and any information given herein shall in no event be regarded as a warranty, guarantee or description of any functionality, conditions and/or quality of our products or any suitability for a particular purpose. With regard to the technical specifications of our products, we kindly ask you to refer to the relevant product data sheets provided by us. Our customers and their technical departments are required to evaluate the suitability of our products for the intended application.

We reserve the right to change this document and/or the information given herein at any time.

Additional information
For further information on technologies, our products, the application of our products, delivery terms and conditions and/or prices, please contact your nearest Infineon Technologies office (www.infineon.com).

Warnings
Due to technical requirements, our products may contain dangerous substances. For information on the types in question, please contact your nearest Infineon Technologies office.

Except as otherwise explicitly approved by us in a written document signed by authorized representatives of Infineon Technologies, our products may not be used in any life-endangering applications, including but not limited to medical, nuclear, military, life-critical or any other applications where a failure of the product or any consequences of the use thereof can result in personal injury.