XMC4800 Automation Board-V2

For XMC4000 family

About this document

Scope and purpose

This document describes the features and hardware details of the XMC4800 Automation Board-V2 equipped with an ARM® Cortex®-M4 based XMC™ Microcontroller from Infineon Technologies AG.

It can be used with a wide range of development tools including Infineon's free of charge Eclipse based IDE, DAVE™. The XMC4800 Automation Board-V2 is designed to evaluate the capabilities of the XMC4800 Microcontroller especially in EtherCAT slave applications in combination with other products of Infineon Technologies.

Intended audience

This document is intended for anyone who wants to develop software on the XMC4800 Automation Board-V2 or wants to use this kit for evaluating and demonstrating the capabilities of the XMC4800 microcontroller in combination with other Infineon Technologies products.

Table of contents

About this document **1**
Table of contents **1**
1 Introduction to the Automation Board-V2 ..... **3**
1.1 Key features 3
1.2 Block diagram 4
2 Hardware description **5**
2.1 Power supply 5
2.2 EtherCAT® slave interface 7
2.3 Ethernet interface 8
2.4 CAN interface 8
2.5 ISOFACE™ interfaces 8
2.5.1 ISOFACE™ out 9
2.5.2 ISOFACE™ in 10
2.6 OPTIGA Trust™ E device 11
2.7 External memory devices 12
2.7.1 SDRAM 12
2.7.2 FRAM 13
2.8 6 Pin user header 14
2.9 User RGB and CAN LEDs 15
2.10 Debugging 15
2.10.1 Cortex™ debug connector (10-pin) 15
2.11 Reset 16
3 Production data **17**
3.1 Schematics 17
3.2 Components placement and geometry 24
3.3 List of material 25
3.4 Schematic enhancements 28

Revision history 30

1 Introduction to the Automation Board-V2

Table 1 Board specification

Processor	Infineon's ARM® Cortex®-M4 XMC4800 microcontroller running at 144 MHz in LFBGA196 package (order number XMC4800-E196K2048)
Flash Memory	2048 kB
Data Memory	352 kB internal, external SDRAM
Dimensions	103 x 86 mm
Clock Crystals	12 MHz and 32.768 kHz crystal for CPU
Power	• Via isolated DC/DC supplied by 24V ISOFACE out supply (Main supply) • Via USB (Micro-AB USB, may exceed USB standard current limits)
Connectors	• EtherCAT Slave IN and OUT interface via RJ45 jack • Ethernet via RJ45 jack • CAN Connector (D-Sub DE-9) • USB Connector (Micro-AB USB) • Serial Wire Debug interface (2x5, 50 mil pitch) to XMC™ • 6 pin (2x3, 50 mil pitch) USIC channel to interface other components like displays • 2x 10 Signal Header for ISOFACE outputs/inputs and 24V supply
Others	• 2x EtherCAT PHYs, 1x Ethernet PHY • ISOFACE™ out () and ISOFACE™ in () • OPTIGA™ Trust E () • CAN transceiver () • 1x SDRAM(Mbit), 1x FRAM (Mbit) • User RGB LED • Reset push-button

1.1 Key features

- XMC4800 Microcontroller (ARM® Cortex®-M4 based), 144 MHz, 2048 kB Flash, 352 kB SRAM, LFBGA196 package.
- EtherCAT slave components: 2 EtherCAT PHYs, Magnetics and 2 RJ45 jacks.
- CAN transceiver and CAN connector (D-Sub DE-9).
- 24V ISOFACE™ 8 x IN and 8 x OUT.
- USB Interface (Micro-AB USB plug).
- RG general purpose CAN LED, RGB user LED.
- Reset Push-Button.
- 12 MHz Crystal.
- 32.768 kHz RTC Crystal.

1.2 Block diagram

The block diagram in Figure 1 shows the main components of the XMC4800 Automation Board-V2 and their interconnections. The main building blocks are:

- XMC4800 Microcontroller in a LFBGA196 package.
- 2 EtherCAT PHY with 2 RJ45 plugs.
- 1 Ethernet PHY with RJ45 plug.
- 24V ISOFACE™ 8 x IN and 8 x OUT.
- RGB LED, CAN RG LED, Reset Push-Button.
- Micro-AB USB Plug.
- CAN Transceiver with SUB 9 connector.

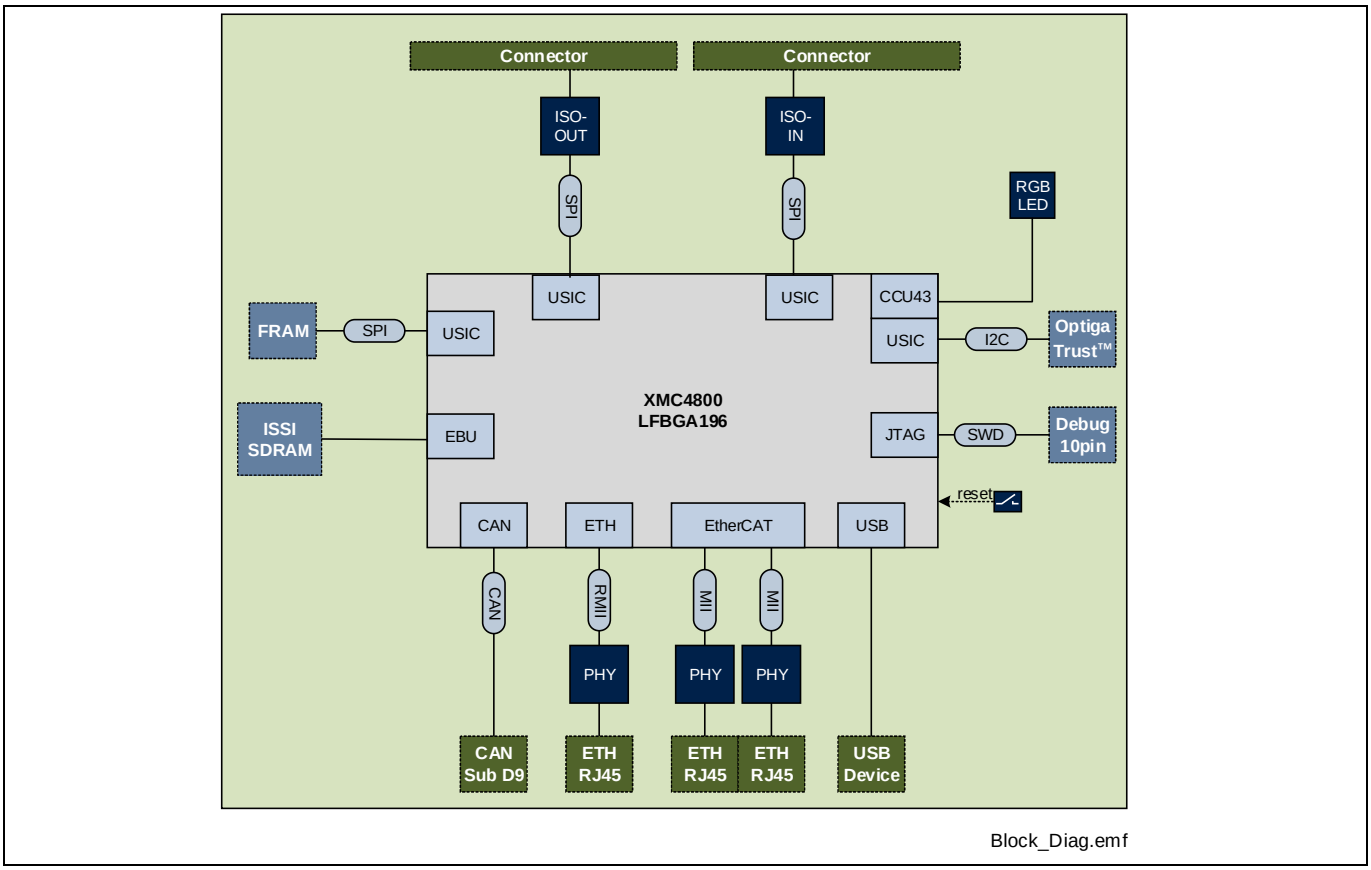

Figure 1 Block diagram of the XMC4800 Automation board-V2

2 Hardware description

The following chapters provide a detailed description of the hardware and how it can be used.

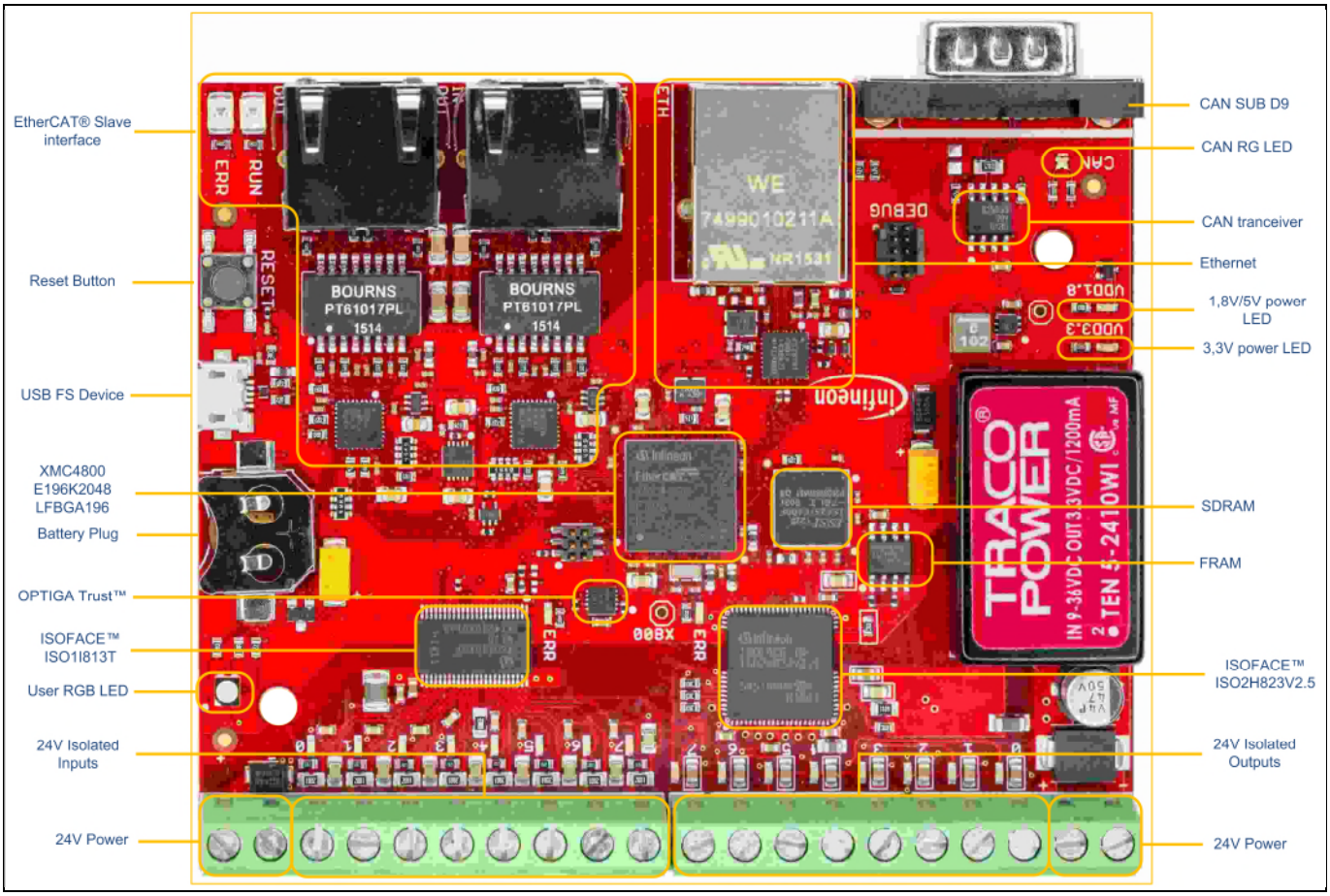

Figure 2 PCB of the Automation Board-V2

2.1 Power supply

The Automation Board-V2 consists out of 3 power islands (Figure 3) which are:

- 24V DC for the ISOFACE™ OUT (ISO2H823V2.5).
- 24V for the ISOFACE™ IN (ISO1I813T).
- 3,3V logic supply for the XMC4800 and add on / communication devices.

To power up the Board, the ISOFACE™ OUT connector (X600) must be supplied by an external 24 Volt DC power supply. An isolated DC/DC converter will generate the 3,3V. The green Power LED (VDD3.3) indicates the presence of the generated 3.3 V supply voltage.

To use the ISOFACE™ IN 24V must be connected to connector X500. Both ISOFACE™ devices will signal an error (red error LEDs) when powering up the Board and must be reset in software. In case of an un-connected or insufficient supply, the error will stay active.

Note: For more information on the errors, please refer to the datasheets of the ISOFACE™ devices.

The two PHY's for the EtherCAT slave connection additionally require a 1,8V supply. This voltage is generated by an adjustable LDO from Infineon Technologies (IFX54441LDV).

For the CAN transceiver 5V is generated by a step-up converter out of the 3,3V. Both, 5V and 3,3V availability are signaled with a second green LED, named VDD1.8V.

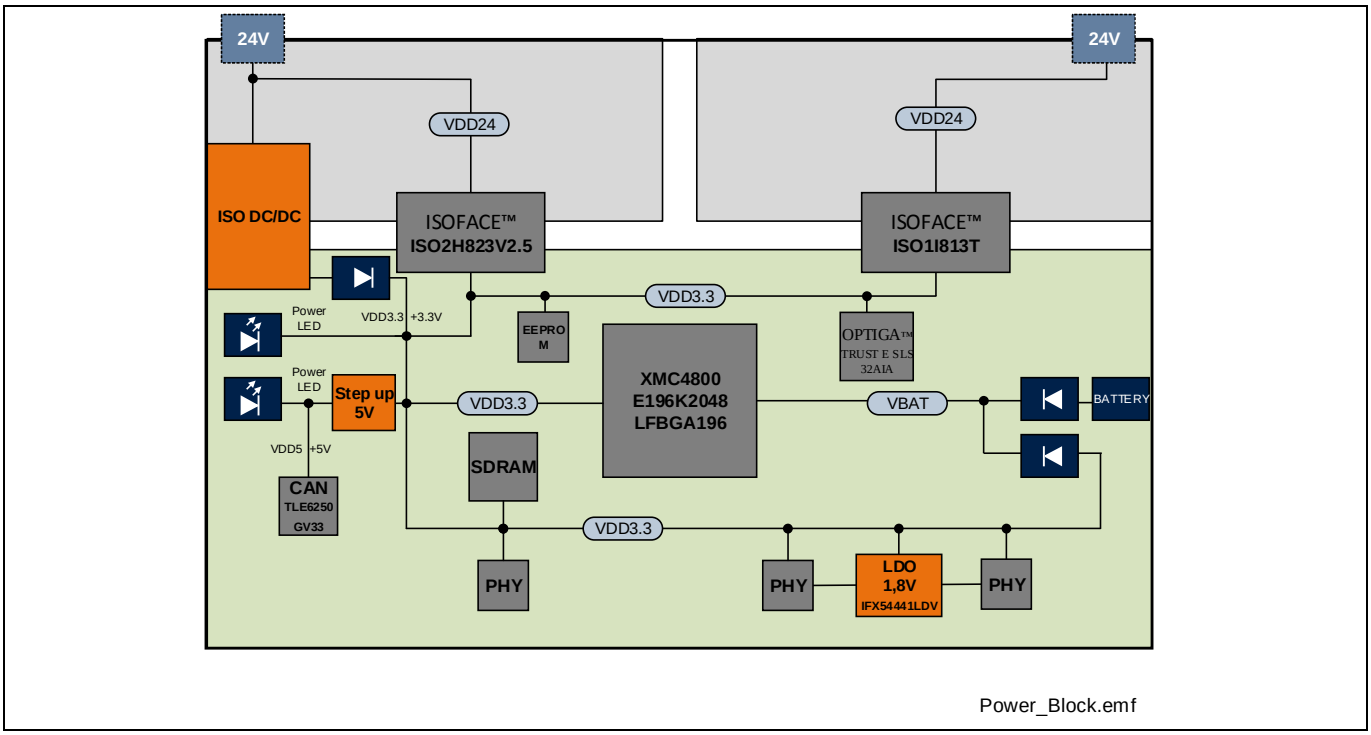

Figure 3 Power supply concept

Note: The 5V input form the USB device plug is not connected to the power supply of the Automation Board.

The hibernate domain is supplied by the standard 3.3V, but a backup battery can also be added for time keeping.

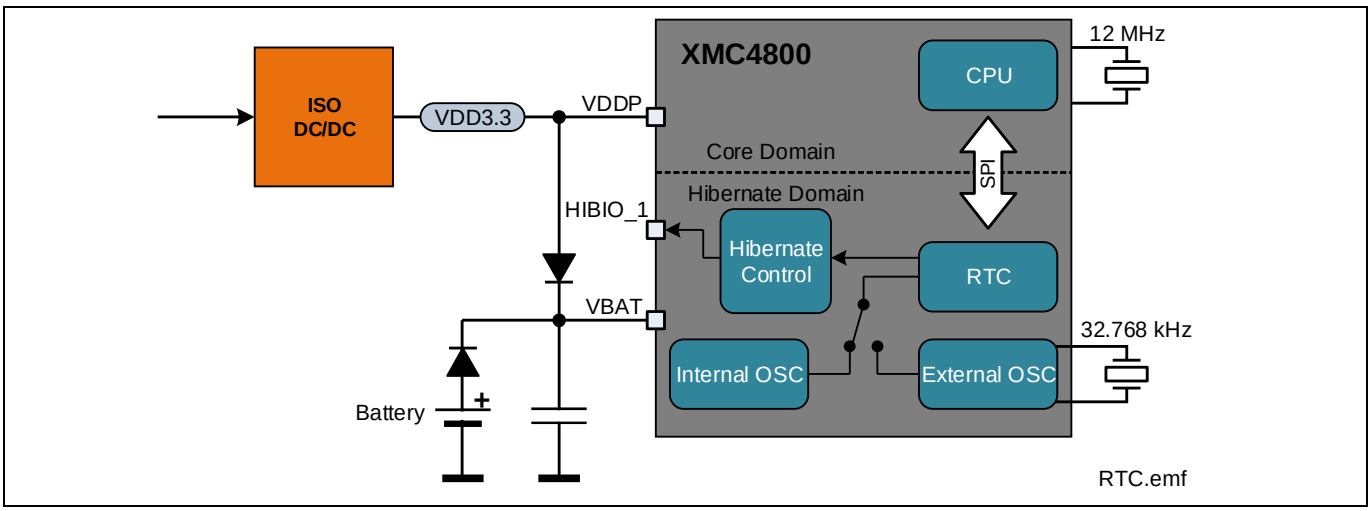

Figure 4 RTC and Battery XMC™ pin functions

Note: In Board delivery no battery is included. A standard 1.6 to 2.5 mm thick by 12mm maxim um 3,3V lithium coin cell shell be used.

2.2 EtherCAT® slave interface

XMC4800 offers the EtherCAT® node integrated on an ARM® Cortex®-M controller. The XMC4800 Automation Board-V2 provides a full EtherCAT® compliant slave node. In combination with the additional components such as the ISOFACE™, standard industrial components such as 24V I/O's can be realized. For more information and examples please visit **www.infineon.com/EtherCAT**.

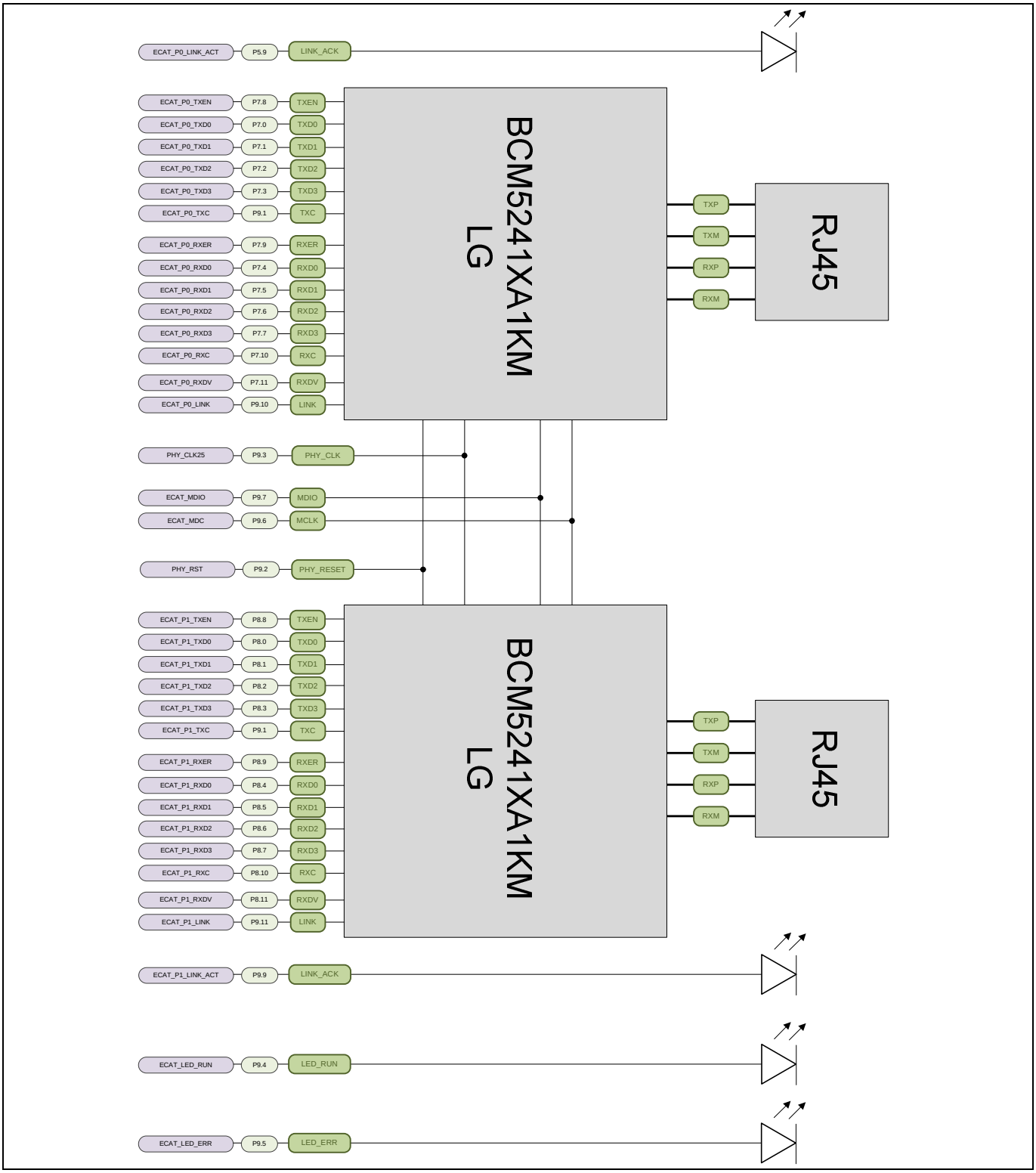

Figure 5 Mapping of EtherCAT PHY function to XMC™ pin functions

2.3 Ethernet interface

The XMC4800 Automation Board-V2 provides a standard Ethernet interface using a Micrel KSZ8081RNB PHY in RMII mode. By default the PHY is switched on. For power saving options the PHY can be placed into permanent reset by the GPIO P6.0. In addition, an Interrupt signal from the PHY is optionally available, connected to an ERU channel. It must be checked that R303 is soldered.

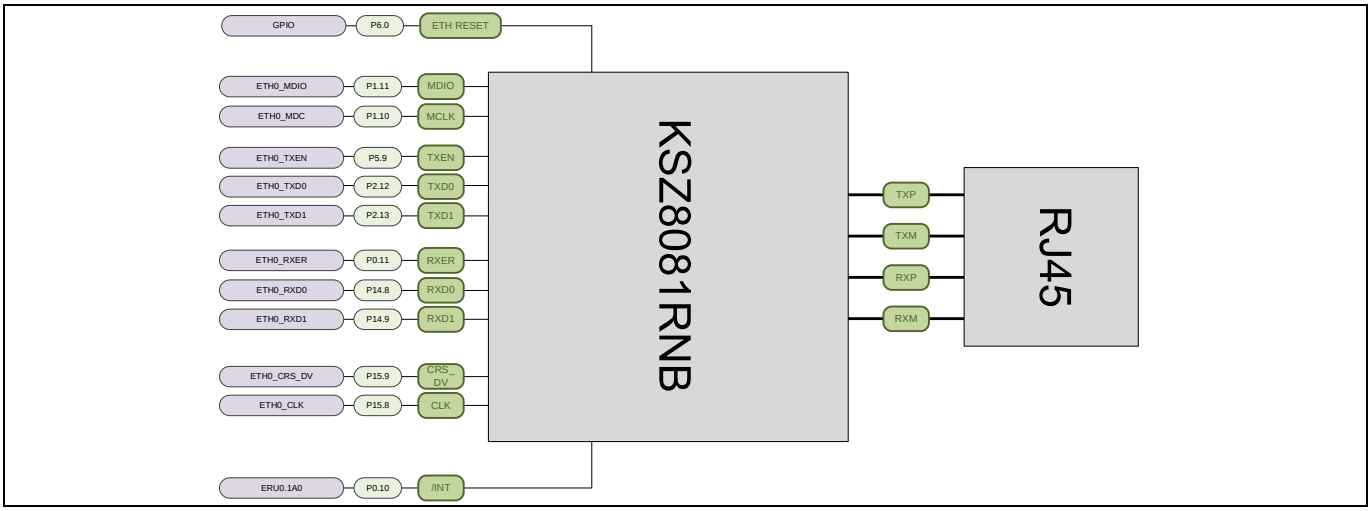

Figure 6 Mapping of Ethernet interface pins to XMC™ pin functions

2.4 CAN interface

The XMC4800 Automation Board-V2 provides a CAN interface via a D-Sub DE-9 connector. Infineon's high speed CAN transceiver IFX1051LE for industrial application supports 3.3V I/O logic and is suitable for 12V and 24V bus systems with an excellent EMC performance. The CAN bus (signals CANH, CANL) are terminated by a 120 Ohm.

Table 2 CAN signals and XMC4800 pin mapping

Signal Name	Pin no. at D-Sub DE-9 (X400)	XMC Pin, XMC Function
CANH	X400.7	-
CANL	X400.2	-
CAN_TX	-	P2.7, CAN.N1_TXD
CAN_RX	-	P2.6, CAN.N1_RXD
CAN_INH		P6.1, GPIO
GND	X400.3, X400.6	-
VDD5	X400.9	-

2.5 ISOFACE™ interfaces

ISOFACE™ interfaces are industrial interface ICs with integrated isolation that can offer a five-fold increase in reliability, and cut product launch time by up to 50%. To minimize unscheduled down-times, ISOFACE™ sets a new standard in diagnostic capabilities. For detailed information about Infineon ISOFACE™ devices please visit: **www.infineon.com/isoface**.

2.5.1 ISOFACE™ out

Infineon Technologies 2nd generation ISOFACE™ 8-channel high-side driver IC ISO2H823V2.5 offers integrated 2.5kV galvanic isolation, thus meets the IEC 61131-2 requirements for reinforced isolation. Concurrently, the ISO2H823V2.5 sets a new standard for system-level diagnostics. Each of the 8 channels is equipped with 5-fold diagnostic monitoring capabilities: Open Load (Active Mode - Driver On and Inactive Mode - Driver Off), Short-to-Vbb, Over-current (Short-to-GND), Over-temperature.

With the ever increasing level of complexity and integration in industrial control systems comprehensive diagnostic monitoring is highly valuable in a vast range of industrial applications, both for preventive maintenance and to shorten costly un-scheduled down-times.

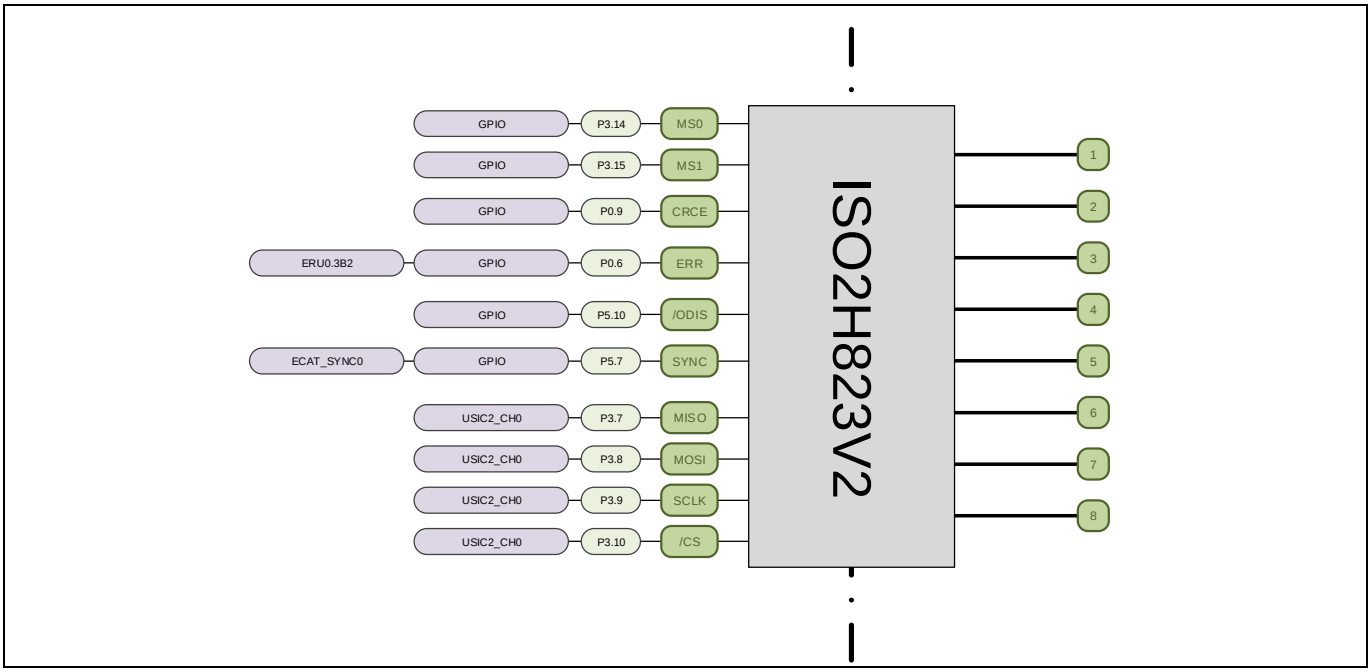

Figure 7 Mapping of ISOFACE™ out functions to XMC™ pin functions

Using the feature of ISOFACE™ under voltage detection, the system can force storing of retain data or go to save sate in case the main 24V goes below the operation level.

2.5.2 ISOFACE™ in

The ISOFACE™ ISO1I81xT product family of galvanically isolated 8-channel digital input ICs (ISO1I811T, ISO1I813T) sample input data from digital sensors and switches. The digital input ICs can be directly connected to digital inputs such as sensors or switches, and the microcontroller or bus-ASIC. Robust galvanic isolation is integrated.

Up to 8 inputs according to IEC61131-2 (Type 1/2/3) can be connected per IC. The precise characteristic of the current sink of the IC's inputs reduces the power dissipation per channel by a factor of up to 2.5-times compared to solutions using resistors and opto-couplers. As a result, more compact designs of input card solutions become possible with ISOFACE™.

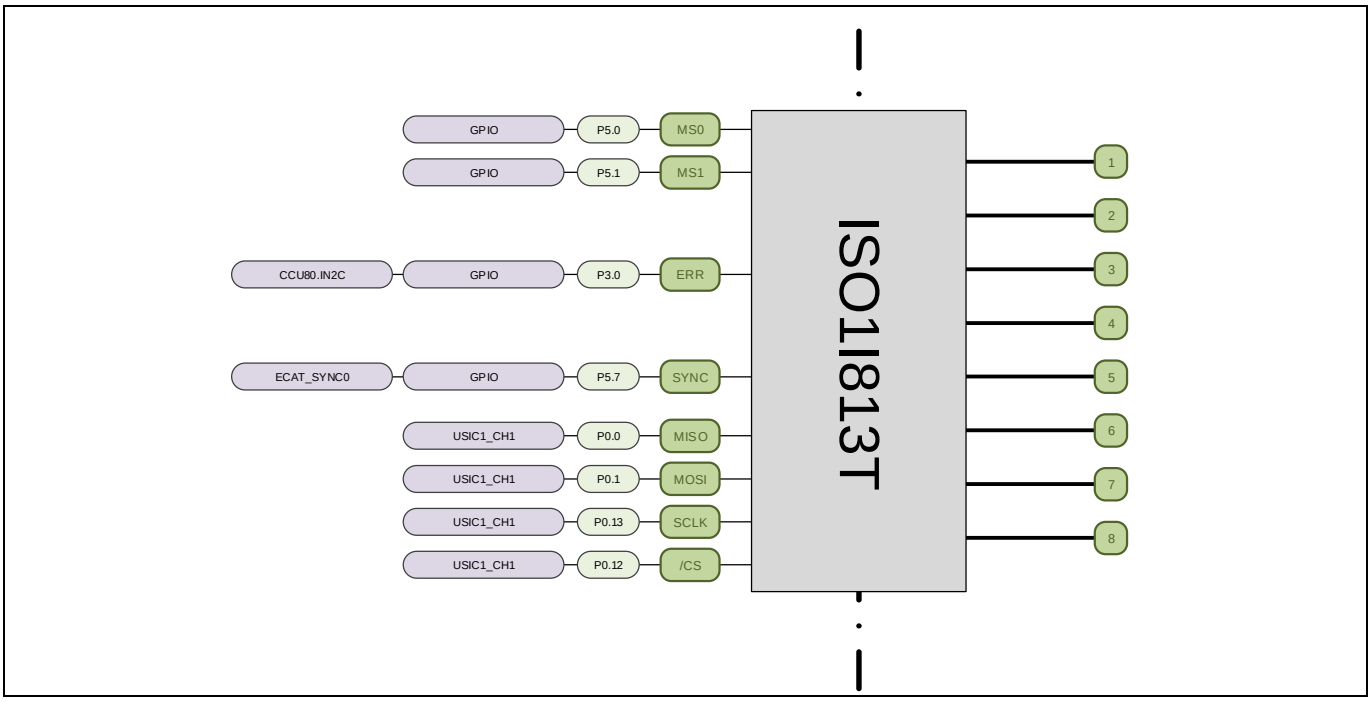

Figure 8 Mapping of ISOFACE™ In functions to XMC™ pin functions

2.6 OPTIGA Trust™ E device

OPTIGA™ Trust E is a high-security solution for industrial automation systems, smart homes, consumer, or medical devices, providing enhanced protection of services, business models, and user experience. Based on its 1-way authentication mechanism, it uniquely identifies objects and protects PKI networks. For more information visit: **www.infineon.com/optiga**.

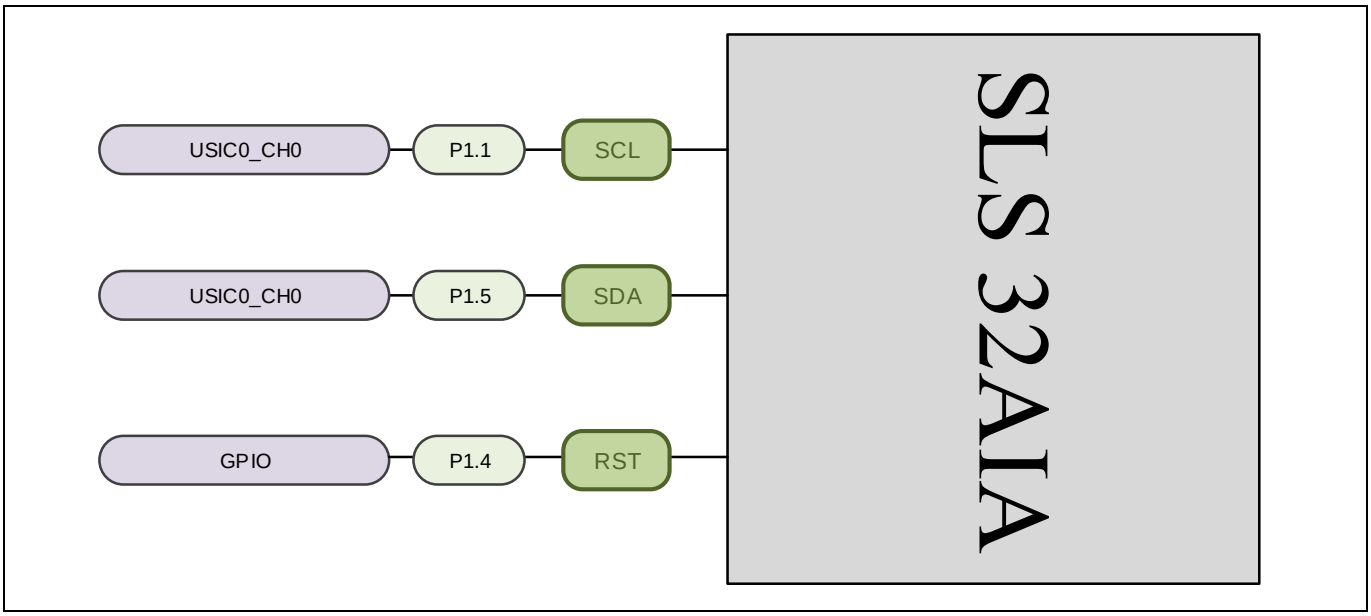

Figure 9 Mapping OPTIGA Trust™ E function to XMC™ pin functions

2.7 External memory devices

The XMC4800 Automation Board-V2 supports two kinds of external memory:

- SDRAM
  - SDRAM is connected to the board to allow applications which requires more than the available RAM memory on the XMC to store data or execute code out of this memory
- FRAM
  - FRAM is intended to be used as the location for retained data storage.

2.7.1 SDRAM

The 64Mb SDRAM is a high-speed CMOS, dynamic random-access memory, designed to operate in 3.3V memory systems. This memory can be used to store code and data during runtime. Execution of code is possible after loading the code into the memory.

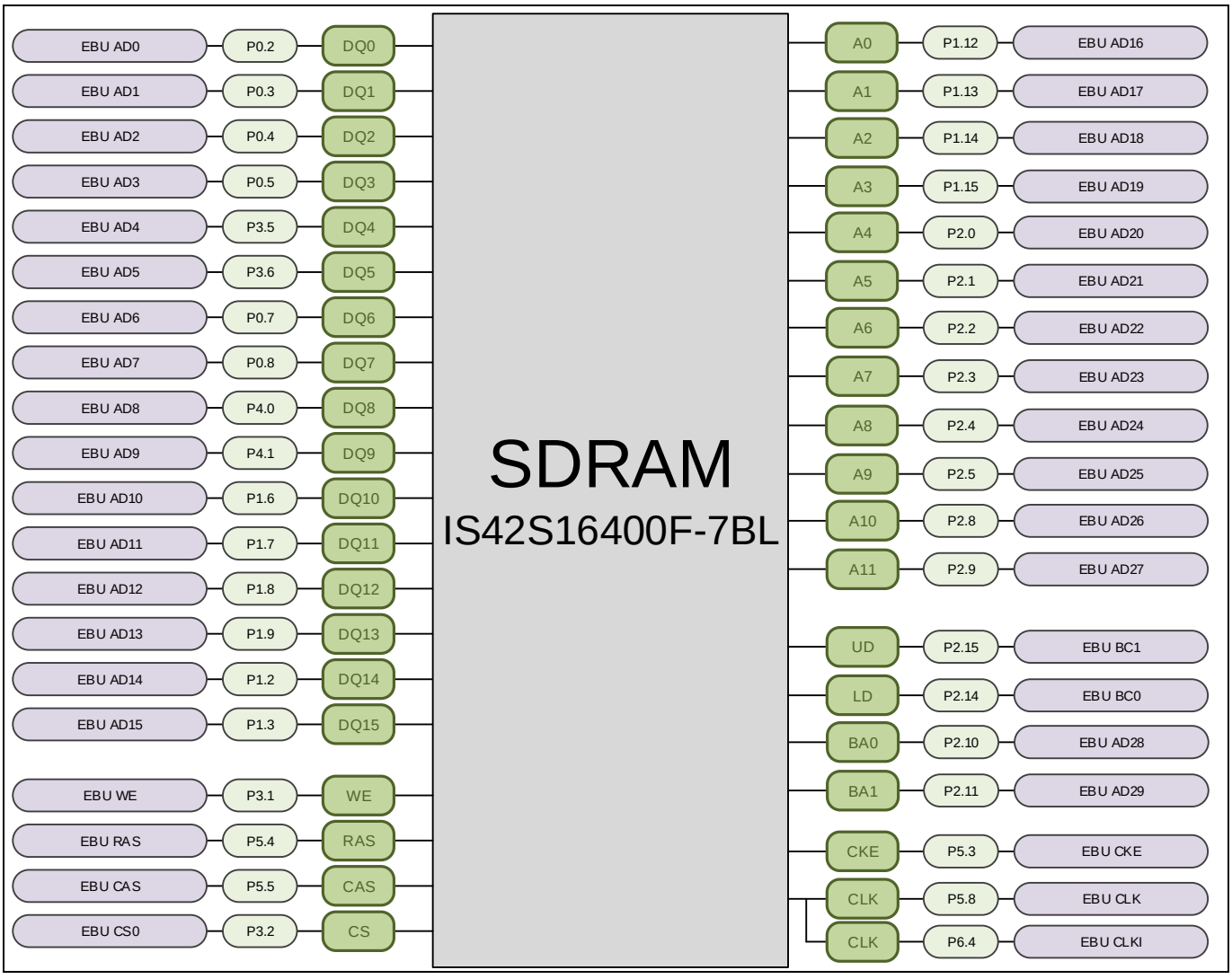

Figure 10 Mapping of SDRAM function to XMC™ pin functions

2.7.2 FRAM

The FM25CL64B is a 64-Kbit non-volatile memory employing an advanced ferroelectric process. A Ferroelectric Random Access Memory (FRAM) is non-volatile and performs reads and writes similar to a RAM.

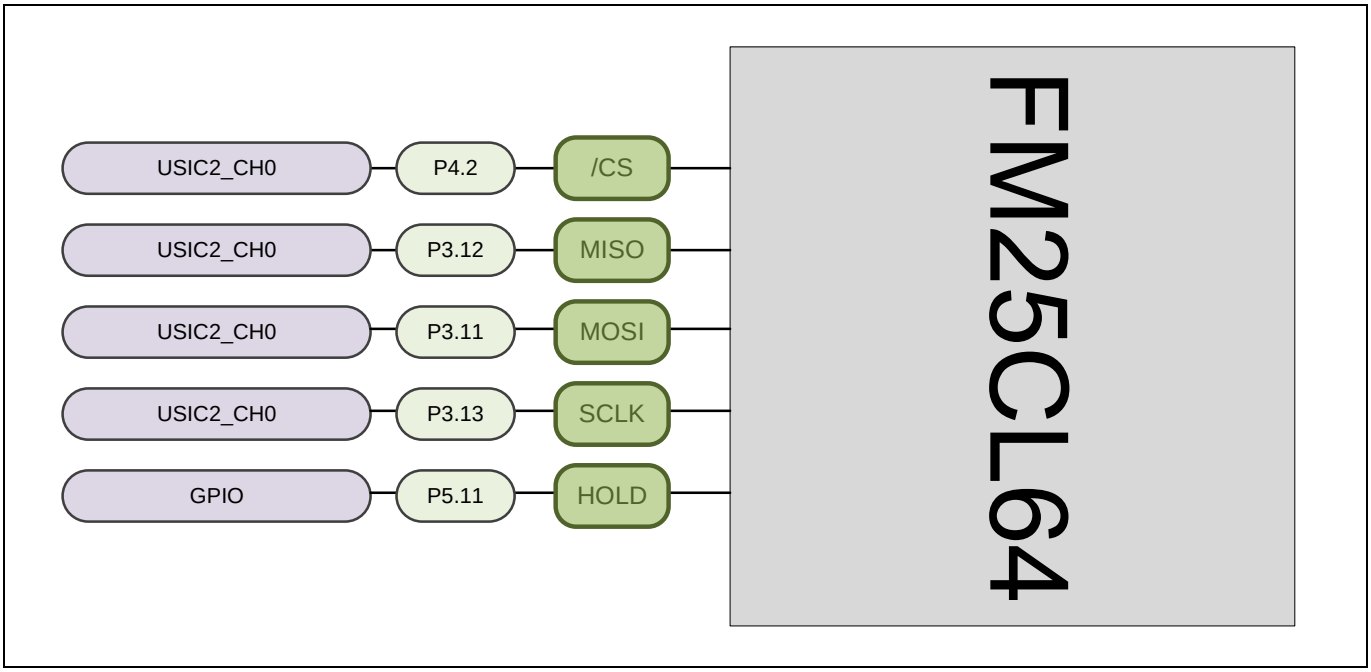

Figure 11 Mapping of FRAM function to XMC™ pin functions

2.8 6 Pin user header

The XMC4800 Automation Board-V2 provides a 6 pin header with a USIC channel to extend the functionality in a given application. For example, a display could be connected.

This USIC channel is shared with the SPI USIC channel of the FRAM. The mapping of GPIOs and XMC™ pin functions to pin header can be found in Table 3. A pull up resistor is connected at the chip select signal at pin 1.

- SPI interface with one chip select
- I2C interface
- UART interface
- +3.3 V Supply

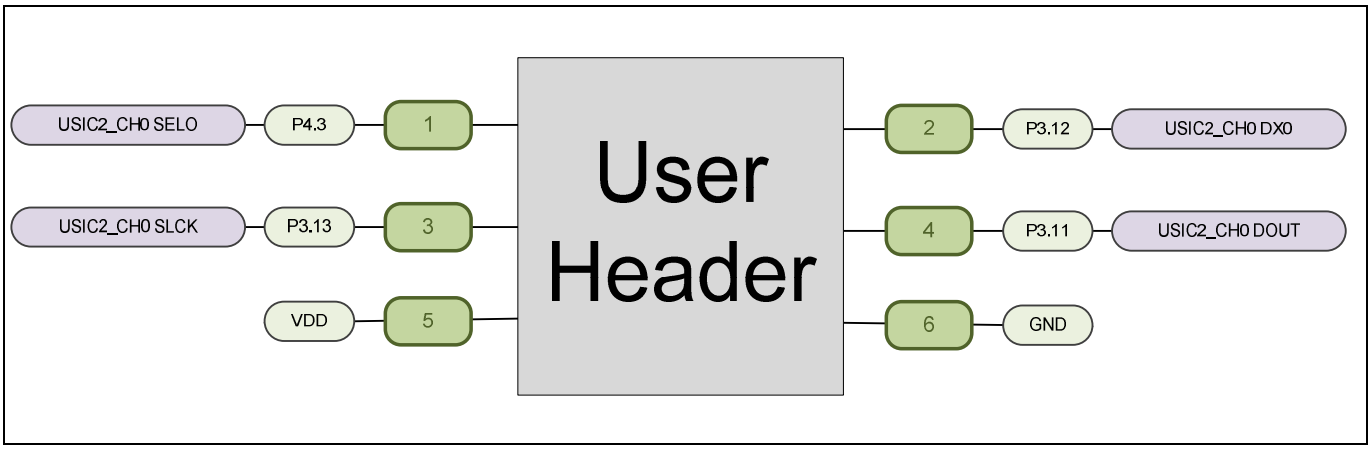

Figure 12 Mapping of user header functions to XMC™ pin functions

Table 3 Pin assignment of the Cortex™ debug connector (X102)

Pin Number	Signal Name	XMC Pin, XMC Function
1	SPI_EXT_CS2	P4.3
2	FRAM_MISO	P3.12
3	FRAM_SCLK	P3.13
4	FRAM_MOSI	P3.11
5	VDD	+3.3 V
6	GND	Ground

2.9 User RGB and CAN LEDs

The XMC4800 Automation Board-V2 provides two LEDs. The port pins used can be found in the following tables. These pins are used exclusively for this function and they are not mapped to other devices or connectors.

Table 4 XMC4800 pin mapping for RGB LED

LED	XMC pin
LED red	P4.4
LED green	P4.5
LED blue	P4.6

Table 5 XMC4800 pin mapping for CAN LED

Button	XMC pin
LED red	P6.2
LED green	P6.3

2.10 Debugging

The XMC4800 Automation Board-V2 supports debugging via a 10-pin Cortex™ Debug Connector. To program and debug the chip any standard ARM™ debugger can be used.

2.10.1 Cortex™ debug connector (10-pin)

The 10-pin Cortex™ debug connector supports Serial Wire Debug (SWD) and Serial Wire Viewer (SWV). The pin assignment of the Cortex™ debug connector is shown in Table 6.

Table 6 Pin assignment of the Cortex™ debug connector (X102)

Pin Number	Signal Name	Description
1	VCC	+3.3 V
2	TMS	Serial Wire Data I/O
3	GND	Ground
4	TCK	Serial Wire Clock
5	GND	Ground
6	SWV	Serial Wire Viewer (Trace Data Out)
7	Key	Key
8	NC	Not connected
9	GND_Detect	Ground detect
10	RESET	Rest (active low)

2.11 Reset

The reset pin (PORST#) of the XMC4800 is a bi-directional pin in open drain mode. An internal pull-up resistor keeps the PORST# pin high during normal operation. A low level at this pin will force a hardware reset. In case of a MCU internal reset the PORST# pin will drive a low signal.

A reset signal can be issued by:

- The on-board Reset Button (SW102, "RESET")
- The external debugger connected to the 10-pin Cortex™ Debug probe connector (X102)

An XMC™ internal circuit always ensures a save at Power-on-Reset. XMC™ does not require any additional external components to generate a reset signal during power-up.

Pin 9.2 is connected to a buffer which resets both EtherCAT PHY's by default if XMC4800 is reset.

Note: Neither PHY should establish an active Link before the ECAT module is up and running.

3 Production data

This chapter covers schematics, board dimensions, component placement and the list of material.

3.1 Schematics

Table 6 shows the schematics of XMC4800 Automation Board hardware version 2.1.

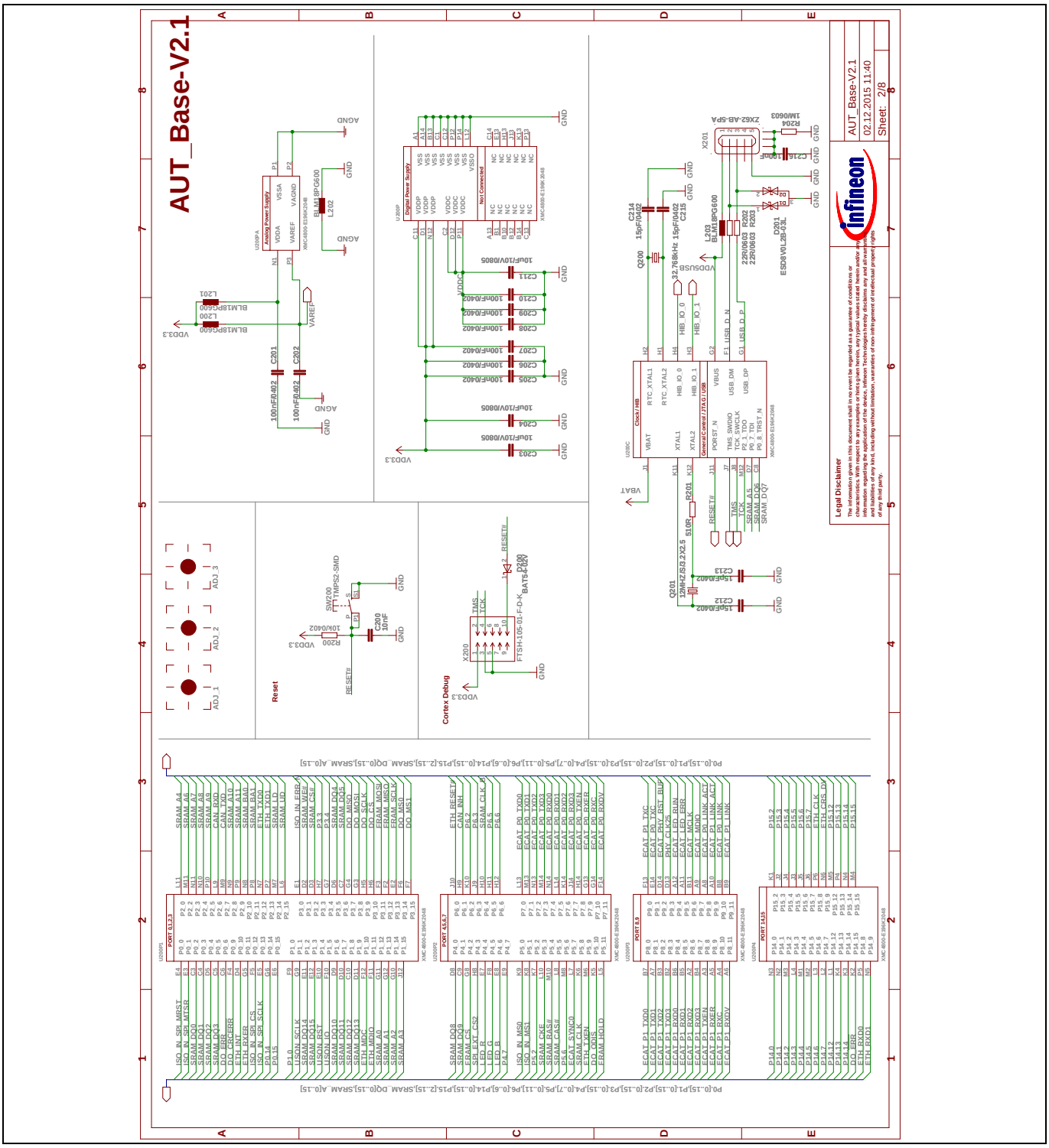

Figure 13 Schematic of the XMC4800 Automation Board-V2

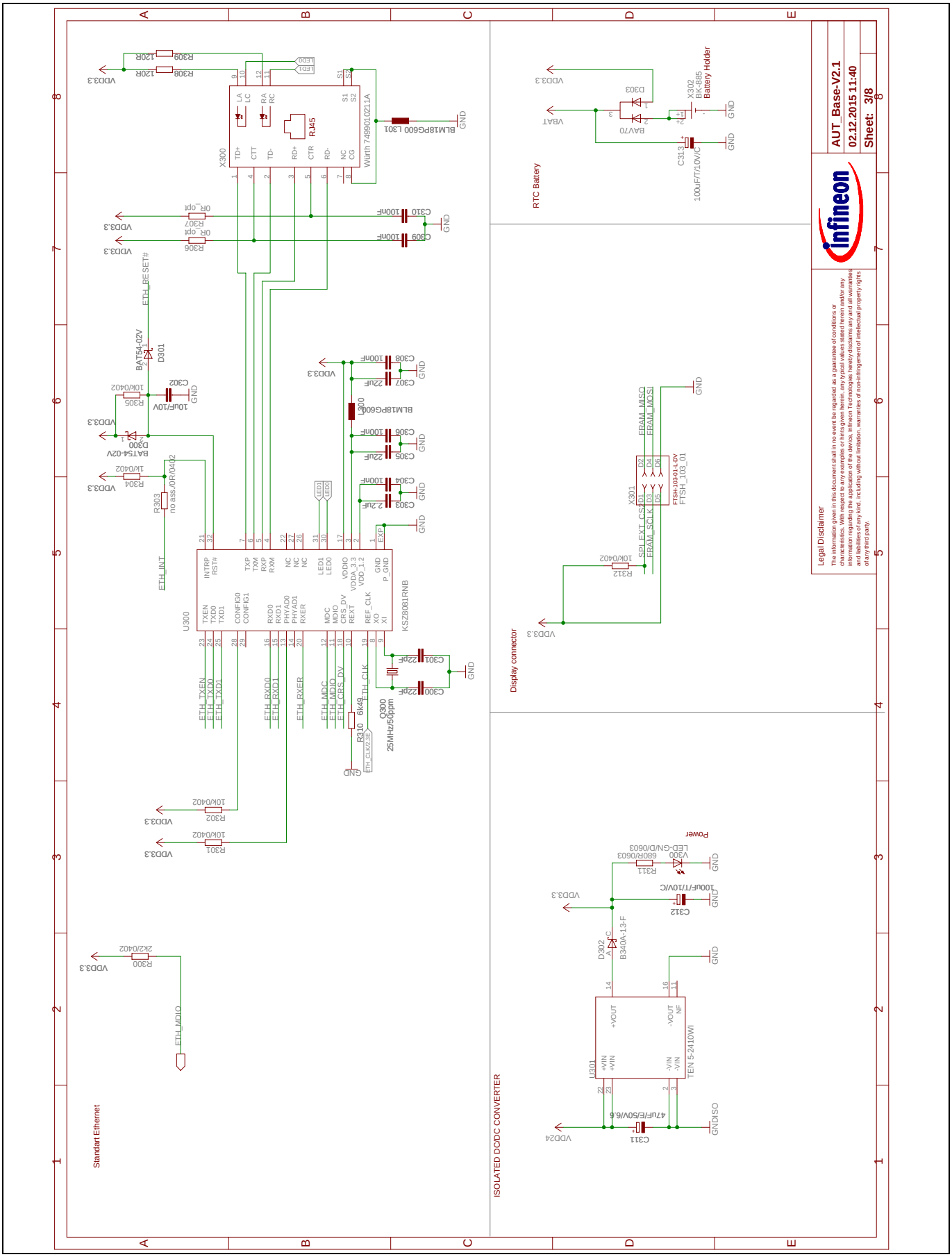

Figure 14 Schematic of the XMC4800 Automation Board-V2

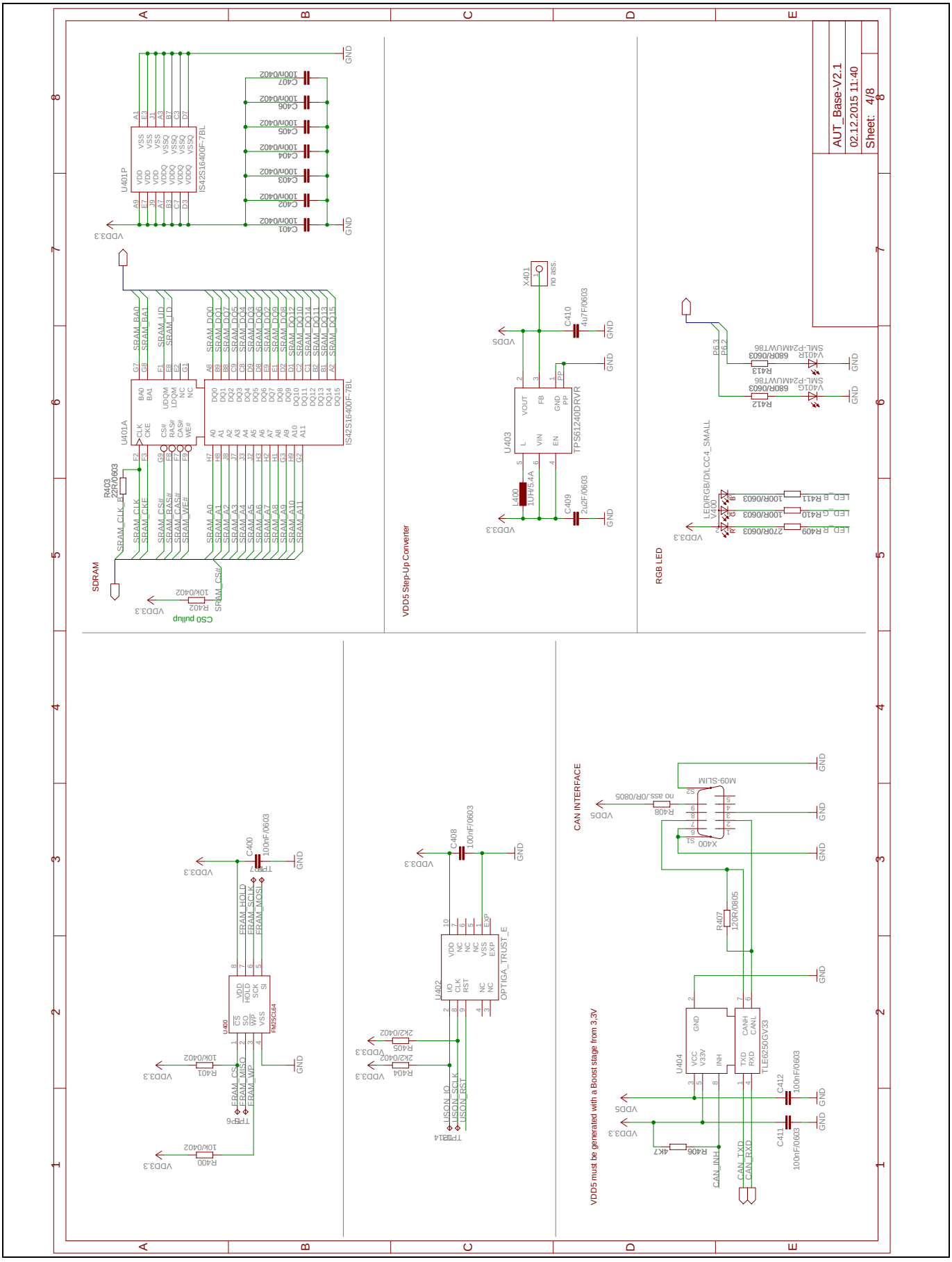

Figure 15 Schematic of the XMC4800 Automation Board-V2

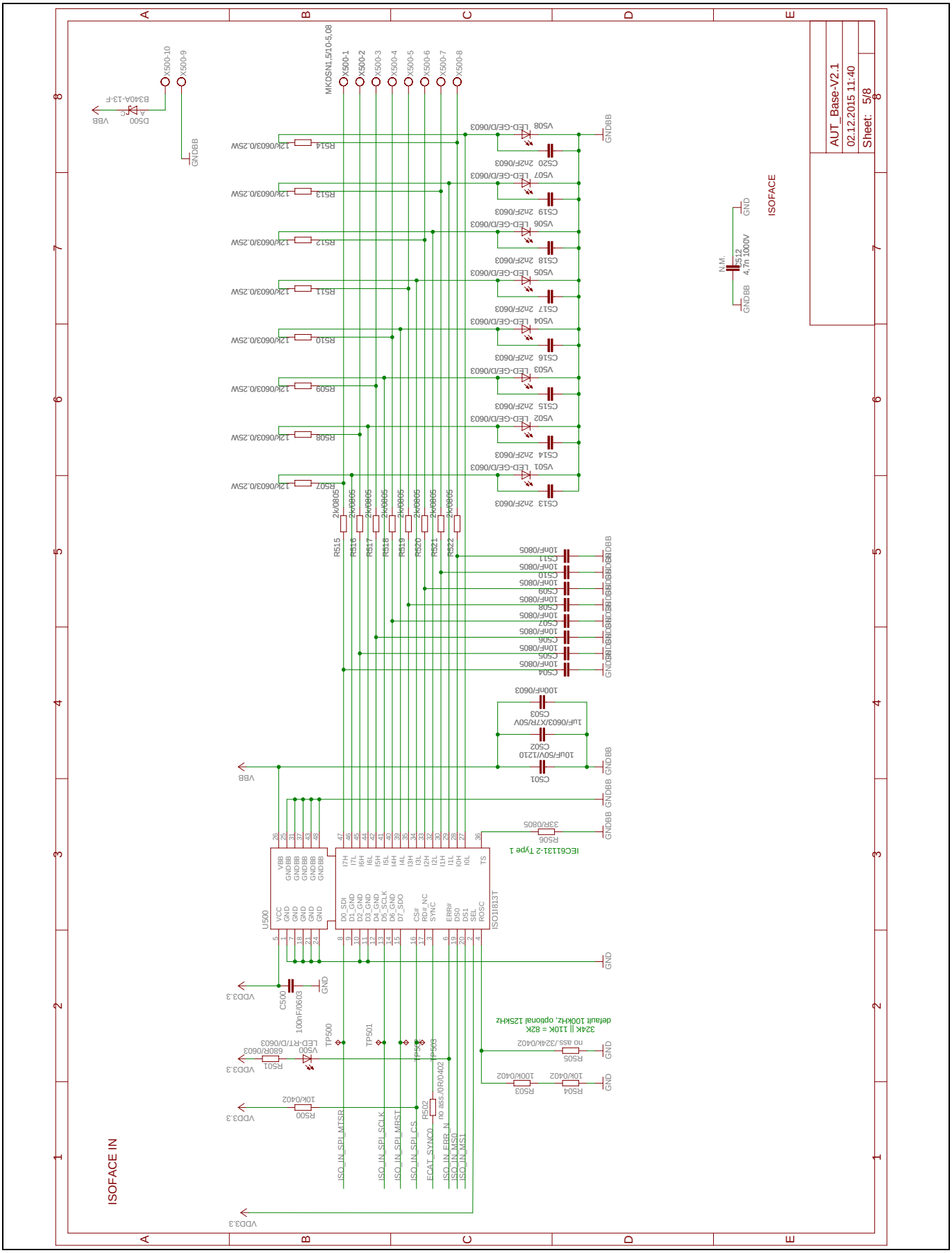

Figure 16 Schematic of the XMC4800 Automation Board-V2

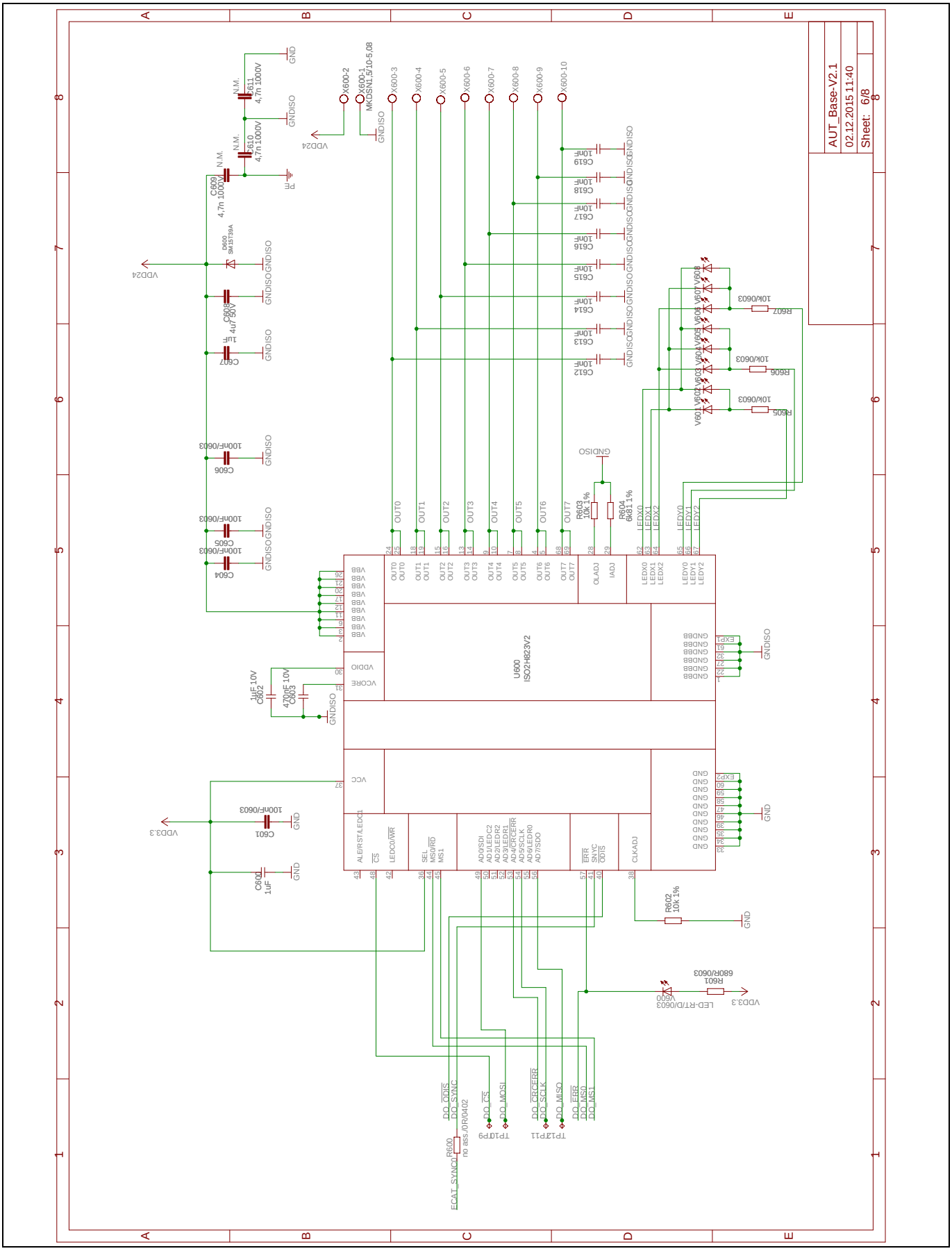

Figure 17 Schematic of the XMC4800 Automation Board-V2

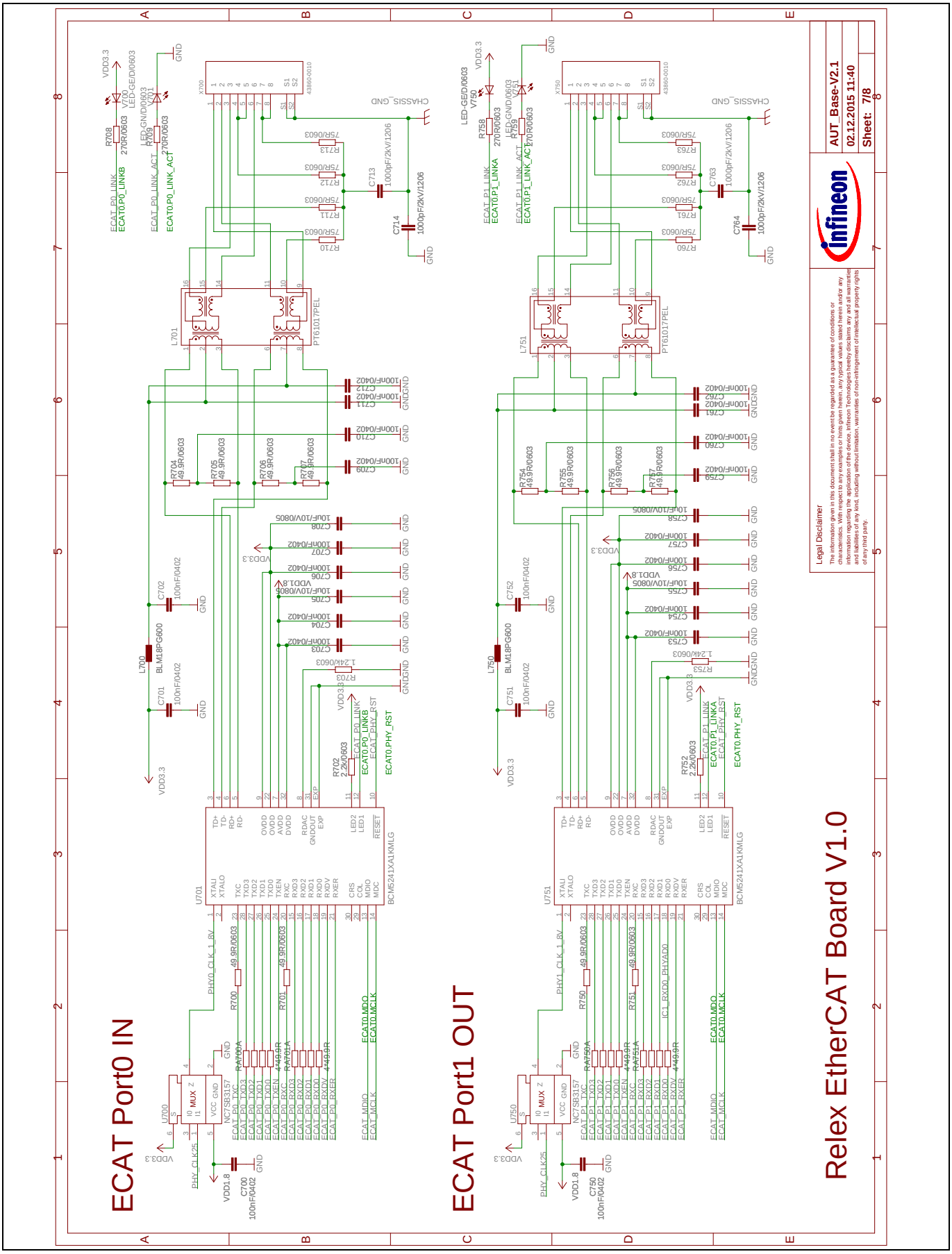

Figure 18 Schematic of the XMC4800 Automation Board-V2

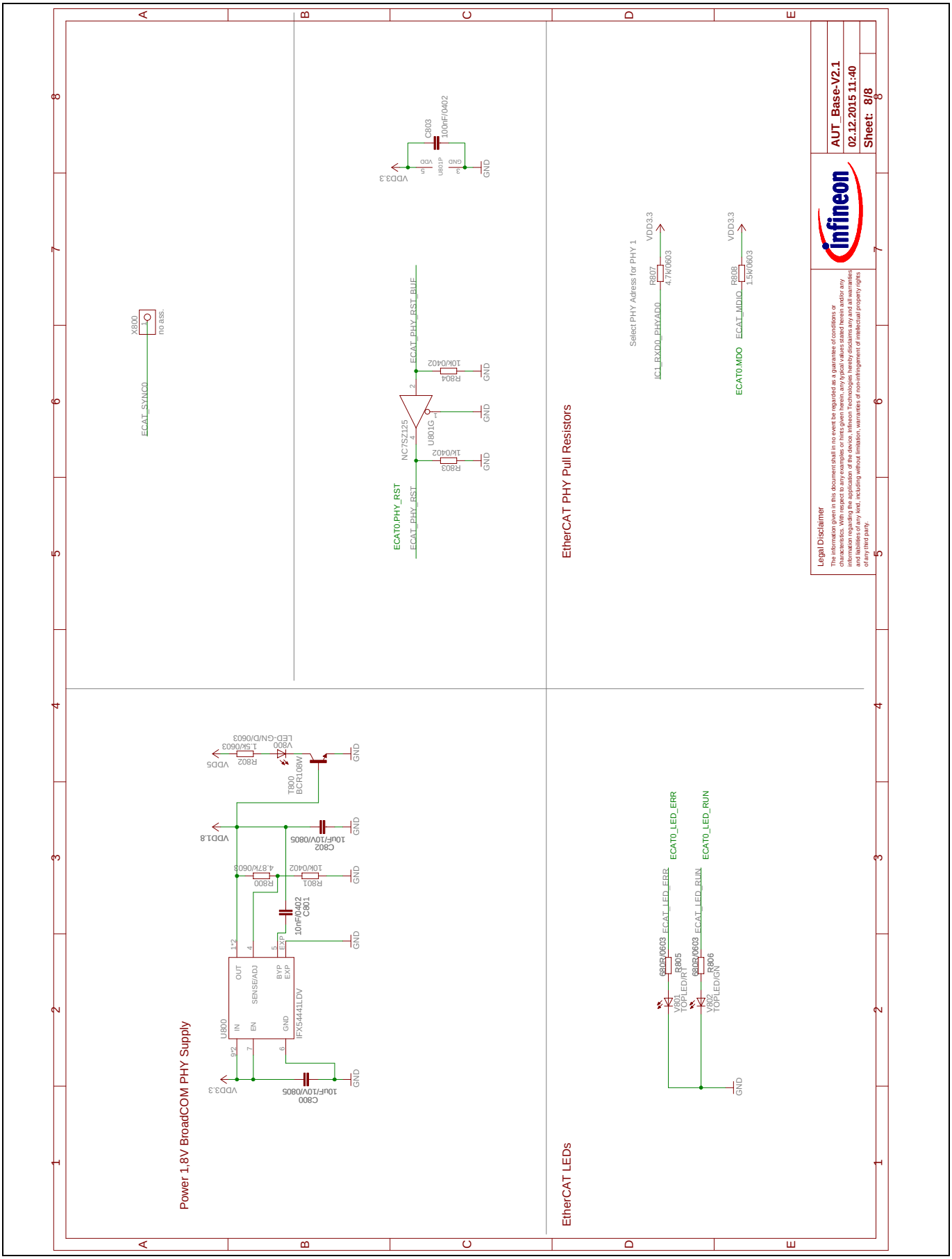

Figure 19 Schematic of the XMC4800 Automation Board-V2

3.2 Components placement and geometry

Figure 20 shows the board dimensions and the placement of components on the PCB.

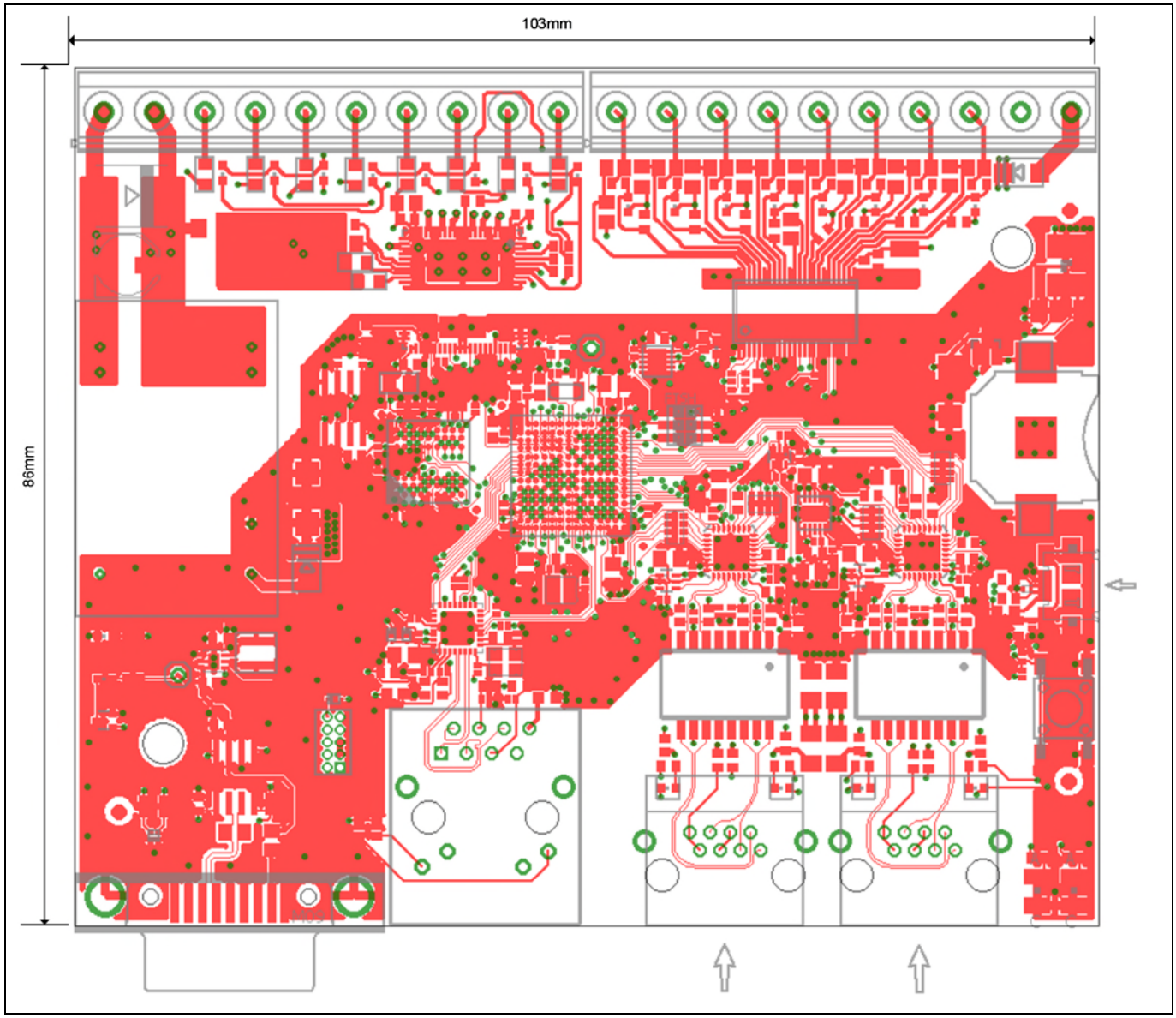

Figure 20 Components placement and geometry

3.3 List of material

The list of material is valid for the Automation Board-V2 hardware.

Table 7 List of material

Value	Device	Qty.	Reference designator
10nF	Capacitor X7R	1	C200
100nF/0402	Capacitor	31	C201, C202, C205, C206, C207, C208, C209, C210, C700, C701, C702, C703, C704, C706, C707, C709, C710, C711, C712, C750, C751, C752, C753, C754, C756, C757, C759, C760, C761, C762, C803
10uF/10V/0805	Capacitor	9	C203, C204, C211, C705, C708, C755, C758, C800, C802
15pF/0402	Capacitor	4	C212, C213, C214, C215
100nF	Capacitor X5R	6	C216, C304, C306, C308, C309, C310
22pF	Capacitor, 0402, NP0, 50V, 22pF	2	C300, C301
10uF/10V	Capacitor	1	C302
2.2uF	Capacitor	1	C303
22uF	Capacitor	2	C305, C307
47uF/E/50V/6.6	Capacitor	1	C311
100uF/T/10V/C	Capacitor	2	C312, C313
100nF/0603	Capacitor	10	C400, C408, C411, C412, C500, C503, C601, C604, C605, C606
100n/0402	Capacitor	7	C401, C402, C403, C404, C405, C406, C407
2u2F/0603	Capacitor	1	C409
4u7F/0603	Capacitor	1	C410
10uF/50V/1210	Capacitor	1	C501
1uF/0603/X7R/50V	Capacitor	1	C502
10nF/0805	Capacitor	8	C504, C505, C506, C507, C508, C509, C510, C511
4,7n 1000V	Capacitor	4	C512, C609, C610, C611
2n2F/0603	Capacitor	8	C513, C514, C515, C516, C517, C518, C519, C520
1uF	Capacitor	1	C600
1礫 10V	Capacitor	1	C602
470nF 10V	Capacitor	1	C603
1uF	Keramik Capacitor, 0805, 1u, 25V	1	C607
4u7 50V	Capacitor	1	C608
10nF	Capacitor	8	C612, C613, C614, C615, C616, C617, C618, C619

Value	Device	Qty.	Reference designator
1000pF/2kV/1206	Capacitor	4	C713, C714, C763, C764
10nF/0402	Capacitor	1	C801
BAT54-02V		3	D200, D300, D301
ESD8V0L2B-03L		1	D201
B340A-13-F		2	D302, D500
BAV70		1	D303
SM15T39A		1	D600
BLM18PG600	Ferrite Bead 60R 500mA Murata	8	L200, L201, L202, L203, L300, L301, L700, L750
1UH/5.4A		1	L400
PT61017PEL		2	L701, L751
32.768kHz	CRYSTAL, FC-135, 32.768 KHZ, 12.5 PF	1	Q200
12MHZ/S/3.2X2.5	Crystal 12MHz 4Pad NX3225SA 12MHz NDK	1	Q201
25MHz/50ppm	Crystal 25MHz 4Pad NX3225SA 25MHz NDK	1	Q300
10k/0402	Resistor	11	R200, R301, R302, R305, R312, R400, R401, R500, R504, R801, R804
510R	Resistor, 0.1W, 1%	1	R201
22R/0603	Resistor	3	R202, R203, R403
1M/0603	Resistor	1	R204
2k2/0402	Resistor	3	R300, R404, R405
no ass./0R/0402	Resistor	3	R303, R502, R600
1k/0402	Resistor	2	R304, R803
0R_opt	Resistor	2	R306, R307
120R	RESISTOR, 0.1W, 1%	2	R308, R309
6k49	Resistor	1	R310
680R/0603	Resistor	7	R311, R412, R413, R501, R601, R805, R806
10k/0402	Resistor	1	R402
4K7	Resistor, 0.1W, 1%	1	R406
120R/0805	Resistor	1	R407
no ass./0R/0805	Resistor	1	R408
270R/0603	Resistor	5	R409, R708, R709, R758, R759
100R/0603	Resistor	2	R410, R411
100k/0402	Resistor	1	R503
no ass./324k/0402	Resistor	1	R505
33R/0805	Resistor	1	R506

Value	Device	Qty.	Reference designator
12k/0603/0.25W	Resistor	8	R507, R508, R509, R510, R511, R512, R513, R514
2k/0805	Resistor	8	R515, R516, R517, R518, R519, R520, R521, R522
10k 1%	Resistor	2	R602, R603
6k81 1%	Resistor	1	R604
10k/0603	Resistor	3	R605, R606, R607
49.9R/0603	Resistor	12	R700, R701, R704, R705, R706, R707, R750, R751, R754, R755, R756, R757
2.2k/0603	Resistor	2	R702, R752
1.24k/0603	Resistor	2	R703, R753
75R/0603	Resistor	8	R710, R711, R712, R713, R760, R761, R762, R763
4.87k/0603	Resistor	1	R800
1.5k/0603	Resistor	2	R802, R808
4.7k/0603	Resistor	1	R807
4*49.9R	Resistor	4	RA700, RA701, RA750, RA751
TMPS2-SMD	Resistor	1	SW200
BCR108W	Resistor	1	T800
TPB1,27		14	TP5, TP6, TP7, TP8, TP9, TP10, TP11, TP12, TP13, TP14, TP500, TP501, TP502, TP503
XMC4800-E196K2048	Infineon Microcontroller XMC4800	1	U200
KSZ8081RNB	Ethernet PHY	1	U300
TEN 5-2410WI		1	U301
FM25CL64	FRAM	1	U400
IS42S16400F-7BL	SDRAM	1	U401
OPTIGA_TRUST_E	Infineon Optiga Trust	1	U402
TPS61240DRVR		1	U403
TLE6250GV33	Infineon CAN transceiver	1	U404
ISO1I813T	Infineon ISOFACE™ device	1	U500
ISO2H823V2	Infineon ISOFACE™ device	1	U600
NC7SB3157		2	U700, U750
BCM5241XA1KMLG	Broadcom Ethernet PHY	2	U701, U751
IFX54441LDV	Infineon voltage regulator	1	U800
NC7SZ125		1	U801
LED-GN/D/0603	LED SMD gn LSQ971-Z	4	V300, V701, V751, V800
LED/RGB/D/LCC4_SMALL		1	V400
SML-P24MUWT86		1	V401
LED-RT/D/0603	LED SMD rt LSQ976-Z	2	V500, V600

Value	Device	Qty.	Reference designator
LED-GE/D/0603		18	V501, V502, V503, V504, V505, V506, V507, V508, V601, V602, V603, V604, V605, V606, V607, V608, V700, V750
TOPLED/RT		1	V801
TOPLED/GN		1	V802
FTSH-105-01-F-D-K	Pin Header THT	1	X200
ZX62-AB-5PA		1	X201
Würth 7499010211A		1	X300
FTSH_103_01		1	X301
BK-885		1	X302
M09-SLIM		1	X400
no ass.		2	X401, X800
MKDSN1,5/10-5,08		2	X500, X600
43860-0010		2	X700, X750

3.4 Schematic enhancements

The PHY input clock is provided by the XMC4800. In case a reset of the XMC4800 is issued by the PORST pin, reset of the PHY is asserted and the PHY clock stops immediately. This can result in the PHY not deactivating the link signal (ECAT_Px_LINK) when reset is active immediately. This will lead to packet losses which should be prevented.

Any other kind of reset, software triggered or WDT reset, are capable of switching the PHY_reset signal into reset short before the XMC4800 is reset.

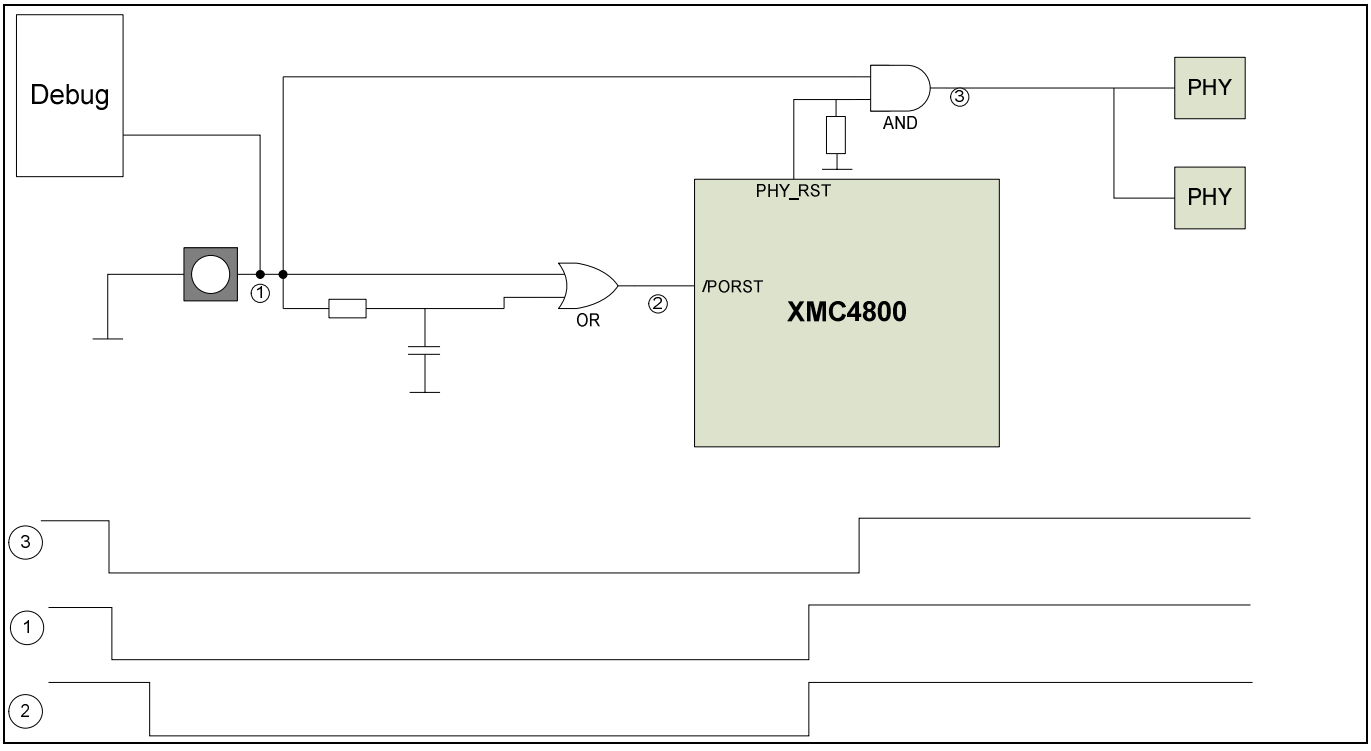

Figure 21 Reset schematic enhancements

Revision history

Major changes since the last revision

Page or reference	Description of change
All pages	First release.

Trademarks of Infineon Technologies AG
µHVIC™, µIPM™, µPFC™, AU-ConvertIR™, AURIX™, C166™, CanPAK™, CIPOS™, CIPURSE™, CoolDP™, CoolGaN™, COOLiR™, CoolMOS™, CoolSET™, CoolSiC™, DAVE™, DI-POL™, DirectFET™, DrBlade™, EasyPIM™, EconoBRIDGE™, EconoDUAL™, EconoPACK™, EconoPIM™, EiceDRIVER™, eupec™, FCOS™, GaNpowIR™, HEXFET™, HITFET™, HybridPACK™, iMOTION™, IRAM™, ISOFACE™, IsoPACK™, LEDrivIR™, LITIX™, MIPAQ™, ModSTACK™, my-d™, NovalithIC™, OPTIGA™, OptiMOS™, ORIGA™, PowIRaudio™, PowIRStage™, PrimePACK™, PrimeSTACK™, PROFET™, PRO-SIL™, RASIC™, REAL3™, SmartLEWIS™, SOLID FLASH™, SPOC™, StrongIRFET™, SupIRBuck™, TEMPFET™, TRENCHSTOP™, TriCore™, UHVIC™, XHP™, XMC™

Trademarks updated November 2015

Other Trademarks
All referenced product or service names and trademarks are the property of their respective owners.
EtherCAT® is registered trademark and patented technology, licensed by Beckhoff Automation GmbH, Germany.

Edition 2016-10-16

Published by

Infineon Technologies AG

81726 Munich, Germany

© 2016 Infineon Technologies AG.
All Rights Reserved.

Do you have a question about this document?

Email: erratum@infineon.com

Document reference
AP32361

IMPORTANT NOTICE

The information contained in this application note is given as a hint for the implementation of the product only and shall in no event be regarded as a description or warranty of a certain functionality, condition or quality of the product. Before implementation of the product, the recipient of this application note must verify any function and other technical information given herein in the real application. Infineon Technologies hereby disclaims any and all warranties and liabilities of any kind (including without limitation warranties of non-infringement of intellectual property rights of any third party) with respect to any and all information given in this application note.

The data contained in this document is exclusively intended for technically trained staff. It is the responsibility of customer's technical departments to evaluate the suitability of the product for the intended application and the completeness of the product information given in this document with respect to such application.

For further information on the product, technology, delivery terms and conditions and prices please contact your nearest Infineon Technologies office (**www.infineon.com**).

WARNINGS

Due to technical requirements products may contain dangerous substances. For information on the types in question please contact your nearest Infineon Technologies office.

Except as otherwise explicitly approved by Infineon Technologies in a written document signed by authorized representatives of Infineon Technologies, Infineon Technologies' products may not be used in any applications where a failure of the product or any consequences of the use thereof can reasonably be expected to result in personal injury.