WLC1150 MP-A2 50-W wireless power transmitter (REF_WLC_TX50W_N1) user guide

About this document

Scope and purpose

This document is a user guide for the WLC1150 MP-A2 50-W wireless power transmitter reference solution (`REF_WLC_TX50W_N1`). It supports high-power proprietary protocol up to 50-W charging with the Infineon 50 W Rx board (`REF_WLC_RX50W_N1`) and is compatible with the Qi EPP 15 W protocol. The reference board demonstrates the capabilities and features of the Infineon WLC1150 wireless charging transmitter controller. WLC1150 is a highly integrated wireless power transmitter with an integrated USB Type-C Power Delivery (PD) controller, compliant with the USB PD 3.1 specification.

You can see the relevant sections based on your requirement:

- **Introduction** – Provides basic information on the reference board, including details about the interfaces.
- **WLC1150 software tool** – Provides an overview of the Wireless Charging Configuration Utility software.
- **WLC1150 wireless power transmitter system design** – Explains the reference board architecture and system design details.
- **Reference board operation** – Describes operating the reference board as a wireless power transmitter, configuring the system-level parameters, downloading the firmware, and capturing the debug log.

Intended audience

The document is intended for the users of the WLC1150 50-W wireless power transmitter reference board (`REF_WLC_TX50W_N1`).

Table of contents

About this document **1**
Table of contents **2**
Safety information **3**
1 Introduction **5**
1.1 Contents 5
1.2 REF_WLC_TX50W_N1 release package 6
1.2.1 Documentation 6
1.2.2 Downloading the kit document and hardware design file 6
1.2.3 Wireless Charging Configuration Utility 6
1.3 Board details 7
2 WLC1150 software tool **8**
2.1 Wireless Charging Configuration Utility 8
3 WLC1150 wireless power transmitter system design **9**
3.1 REF_WLC_TX50W_N1 MP-A2 50W power transmitter board 10
3.1.1 Board connectors 12
3.1.2 Test points 13
4 Reference board operation **15**
4.1 Wireless charging operation 15
4.1.1 Wireless power transfer using Infineon high power protocol mode (50W) 15
4.1.2 Wireless power transfer using Qi protocol 16
4.1.3 System Status and Status LED indication 17
4.1.4 Troubleshooting 18
4.2 Firmware download, configuration (static/dynamic), and monitoring/debugging 19
4.2.1 USB CC communication-based set-up 19
4.2.2 I2C communication-based setup 22
4.3 Capturing debug logs on the WLC reference board 23
5 Appendix A: Wireless power transfer by using high power protocol (50W) mode with DC input power supply **28**
6 Appendix B: Procedure to do calibration for power loss FOD **29**
References **37**
Revision history **38**
Disclaimer **39**

Safety information

The `REF_WLC_TX50W_N1` reference board is intended for use as an evaluation platform for hardware or software in a laboratory environment. The board is an open-system design, which does not include a shielded enclosure. Because of this reason, the board may cause interference with other electrical or electronic devices in close proximity. In such cases, take adequate preventive measures. Also, do not use this board near any medical equipment or RF devices.

Attaching additional wiring to this product or modifying the product operation from the factory default may affect its performance and cause interference with other apparatus in the immediate vicinity. If such interference is detected, suitable mitigating measures must be taken.

The `REF_WLC_TX50W_N1` reference board contains ESD-sensitive devices. Electrostatic charges readily accumulate on the human body and any equipment, which can cause a discharge without detection. Permanent damage may occur to devices subjected to high-energy discharges. Proper ESD precautions are recommended to avoid performance degradation or loss of functionality. Store unused `REF_WLC_TX50W_N1` reference boards in the protective shipping package.

General safety instructions

ESD protection

ESD can damage boards and associated components. Infineon recommends that the user perform procedures only at an ESD workstation. If an ESD workstation is unavailable, use appropriate ESD protection by wearing an antistatic wrist strap attached to the chassis ground (any unpainted metal surface) on the board when handling parts.

Handling boards

The boards provided with the `REF_WLC_TX50W_N1` reference board are sensitive to ESD. When removed from the casing, this applies to the boards supplied with a plastic casing. Hold the boards only by the edges. Place it on a grounded, static-free surface after removing a board from the box/casing. Use a conductive foam pad, if available. Do not slide the board over any surface.

Do’s and don’ts

- Do not touch the inverter output area marked below while the reference board is in use. The components in this area may operate at a voltage higher than 30 V.

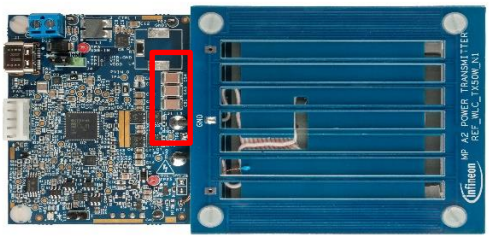

- Keep the coil area of the reference board clear from any metallic debris.
- Monitor the coil interface’s surface temperature during prolonged usage.

- Ensure that there are no foreign metallic objects on the REF_WLC_TX50W_N1 board's charging interface surface soon after the phone/receiver is placed to avoid miscalibration and overheating.
- Do not remove the fan connections anytime as it is required for cooling the receiver surface during high power transfer.
- Ensure that the fan air inlet area located at bottom of the REF_WLC_TX50W_N1 board is not blocked.

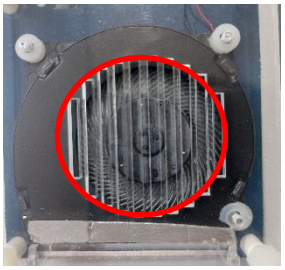

1 Introduction

This document is a user guide for the WLC1150 MP-A2 50-W wireless power transmitter reference solution (REF_WLC_TX50W_N1). This solution consists of the reference board, firmware, and software utility called the Wireless Charging Configuration Utility.

Infineon's WLC1150-based 50-W wireless power transmitter reference board REF_WLC_TX50W_N1 is a highly integrated, Qi-compatible transmitter design with an MP-A2 type transmitter coil.

The REF_WLC_TX50W_N1 board delivers a maximum output power of 50 W with the high-power Infineon Wireless Rx (REF_WLC_RX50W_N1) and 15 W maximum power with WPC-compliant wireless Rx.

The REF_WLC_TX50W_N1 board works with high-power Infineon Wireless Rx (REF_WLC_RX50W_N1) by taking power from a Type-C PD adapter and delivering up to 50 W power. The input voltage will be automatically configured to 20 V. It can also be powered up with fixed input DC supply of 20 V/4 A. Input supply is used to power up the full-bridge inverter driving the resonance tank (resonance capacitor and transmitter coil). The inverter controls the output power flow by changing the switching frequency and duty.

The REF_WLC_TX50W_N1 board also works with Qi-compliant wireless receivers by taking power from a Type-C PD adapter and delivering up to 15 W power. The input voltage is automatically configured to 12 V or 15 V based on Type-C PPS/PD contract capability. Input supply is used to power up the full-bridge inverter driving the resonance tank (resonance capacitor and transmitter coil). The inverter controls the output power flow by varying the switching frequency and duty cycle.

WLC1150 has integrated gate drivers for the buck and inverter power supplies necessary for wireless transmitter applications. Buck controller is being used to control the fan integrated with REF_WLC_TX50W. WLC1150 supports a wide input voltage range and offers many programmable features for creating distinct wireless transmitter solutions.

The REF_WLC_TX50W_N1 is also compatible to charge iPhones, where the inverter operates at a fixed frequency of 127.7 kHz and 50% duty by taking power from a Type-C PPS adapter. It requires a Type-C PPS adapter. The input voltage supplied by the PPS adapter will be controlled by WLC1150, by input voltage configuration to control the output power flow.

1.1 Contents

The WLC1150 50-W wireless power transmitter reference board package contains the following:

- REF_WLC_TX50W_N1 reference board
- 65 W PPS compatible USB Type-C power adapter
- USB Type-C cable
- Infineon 50-W demo Rx board (REF_WLC_RX50W_N1)
- HPI dongle (HPI_DONGLE) for programming/debugging
- USB Micro-B cable
- Jumper wires (x4)
- Quick start guide

The following items may be required for evaluating the wireless power transmitter capabilities of the reference board. Note that these are not included in the reference board package.

- Qi- compliant phone
- Windows PC running Windows OS 10 or higher to run the Wireless Charging Configuration Utility
- DC power supply (Minimum 24 V, 4 A rated)

1.2 REF_WLC_TX50W_N1 release package

Contact **Infineon technical support** to get the release package. The release package includes the following items:

1.2.1 Documentation

The documents include:

- Quick start guide
- Test report
- User guide (this document)
- WLC1150 datasheet
- Release notes

The hardware design files package includes:

- Schematics
- Bill of materials (BOM)
- Layout files

1.2.2 Downloading the kit document and hardware design file

Download the documents and the hardware design files for `REF_WLC_TX50W_N1` from the `REF_WLC_TX50W_N1` reference board webpage **[1]**. The documents include a quick start guide, test report, and user guide (this document). The hardware design files package includes a schematic, bill of materials (BOM), and layout files.

1.2.3 Wireless Charging Configuration Utility

Wireless Charging Configuration Utility supports the following key features:

1. Downloading firmware onto the 50 W Tx reference board
2. Configure the firmware parameters and download the updated configuration onto the 50 W Tx reference board
3. Monitor and configure the firmware parameters dynamically while the 50 W Tx reference board is operational

The `REF_WLC_TX50W_N1` release package includes the installer for this utility. Install the utility on a Windows PC (Windows 10 or higher) and see the Utility user guide to get more details.

1.3 Board details

The key interfaces of the WLC1150 50 W Tx reference board are marked in **Figure 1**.

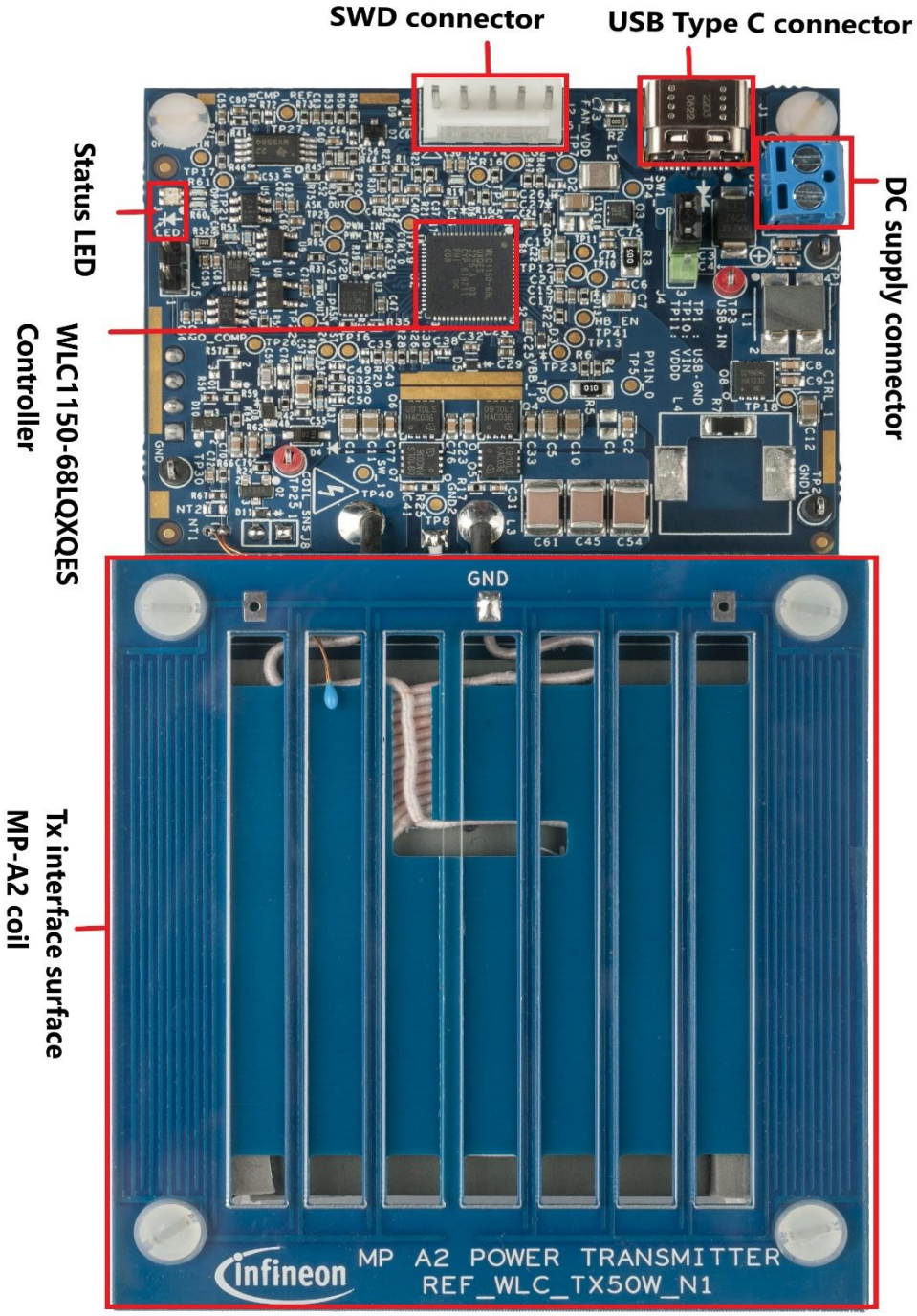

Figure 1 `REF_WLC_TX50W_N1` **board interfaces**

2 WLC1150 software tool

2.1 Wireless Charging Configuration Utility

The WLC1150 controller is a fully programmable controller allowing users to configure the firmware parameters and store them in its internal flash memory. The Wireless Charging Configuration Utility is a Microsoft Windows application developed by Infineon to guide the WLC1150 user through the process of configuring and programming the WLC1150 device. The utility allows users to:

1. To read the firmware configuration data from the `REF_WLC_TX50W_N1` reference board and modify it or create a new configuration from the scratch.
2. Program the resulting configuration data onto the target WLC1 device or program the complete firmware.
3. Monitor and configure the firmware parameters dynamically while the 50 W Tx reference board is operational

The WLC1150 controller supports programming over the CC and I2C interface. Usage of the Wireless Charging Configuration Utility requires the HPI dongle hardware, which is included in the reference design package.

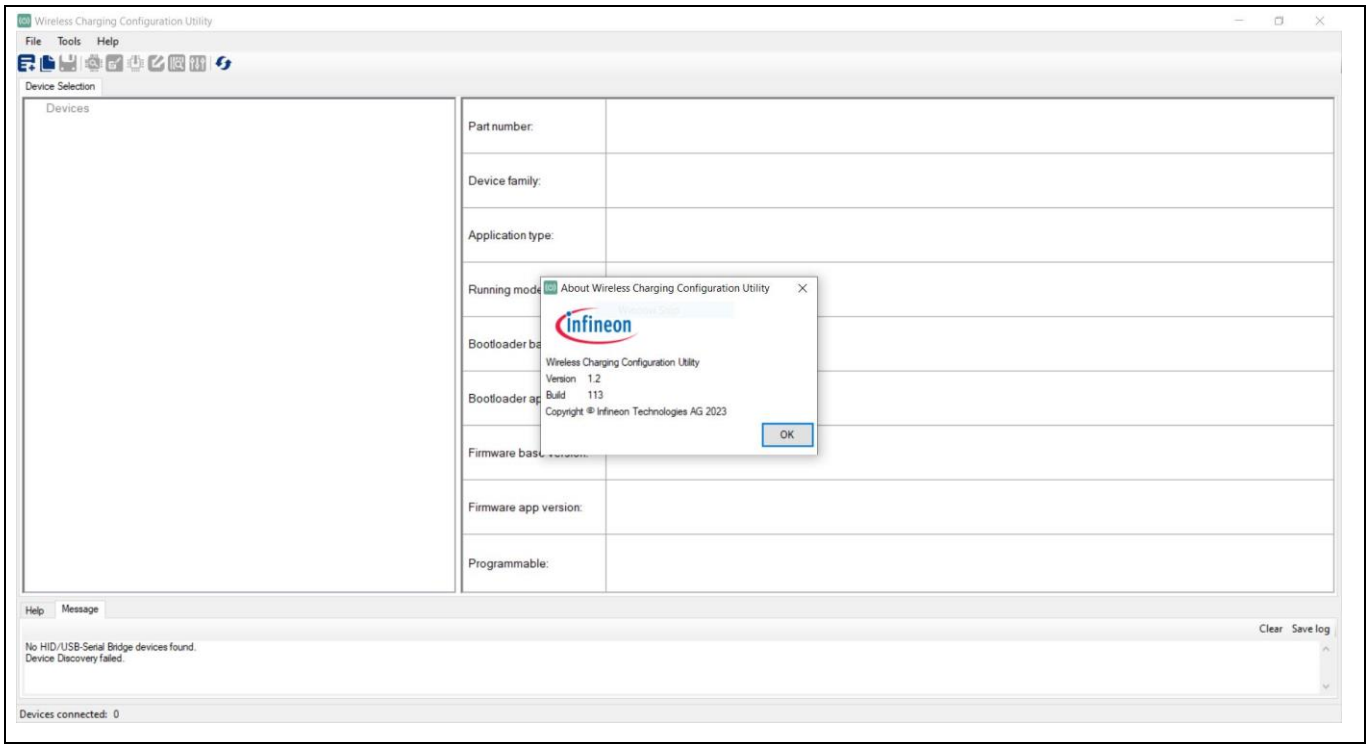

Figure 2 Wireless Charging Configuration Utility

3 WLC1150 wireless power transmitter system design

The WLC1150 wireless transmitter implements 50-W wireless power transfer using the Infineon high-power protocol. The transmitter also supports BPP and EPP types of wireless receivers and is compliant with Qi 1.3.2 specification.

The interconnection of `REF_WLC_TX50W_N1` with source and receivers is shown in **Figure 3**. The recommended DC input source configurations are listed in **Table 1**.

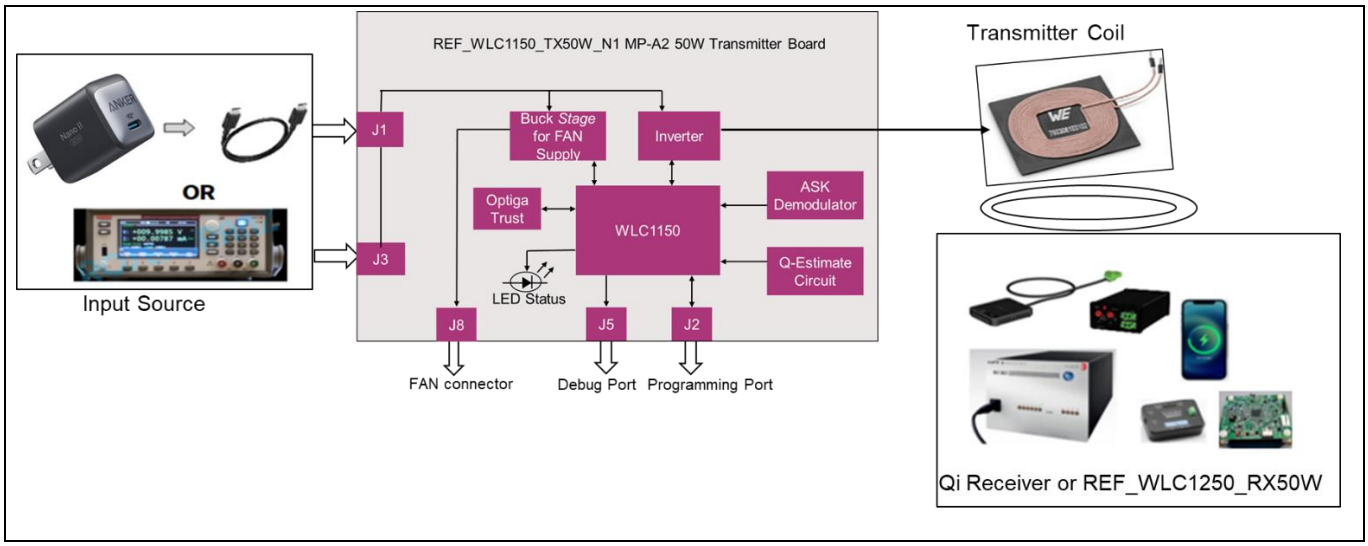

Figure 3 WLC1150 kit interconnection

Table 1 Input source for the reference board

DC input source	`REF_WLC_TX50W_N1` requirement
DC power supply	DC voltage type 24 V, 4 A output capacity
USB Type-C and PD/PPS adapter	5 V, 3 A 9 V, 3 A 15 V, 3 A 20 V, 3.25 A

Note: The kit is configured to operate with 50 W Rx (REF_WLC_RX50W_N1) with USB PD input by default.

3.1 REF_WLC_TX50W_N1 MP-A2 50W power transmitter board

The `REF_WLC_TX50W_N1` MP-A2 50-W transmitter board implements the power stage and control of wireless power transfer system. The transmitter board architecture is shown in **Figure 4**.

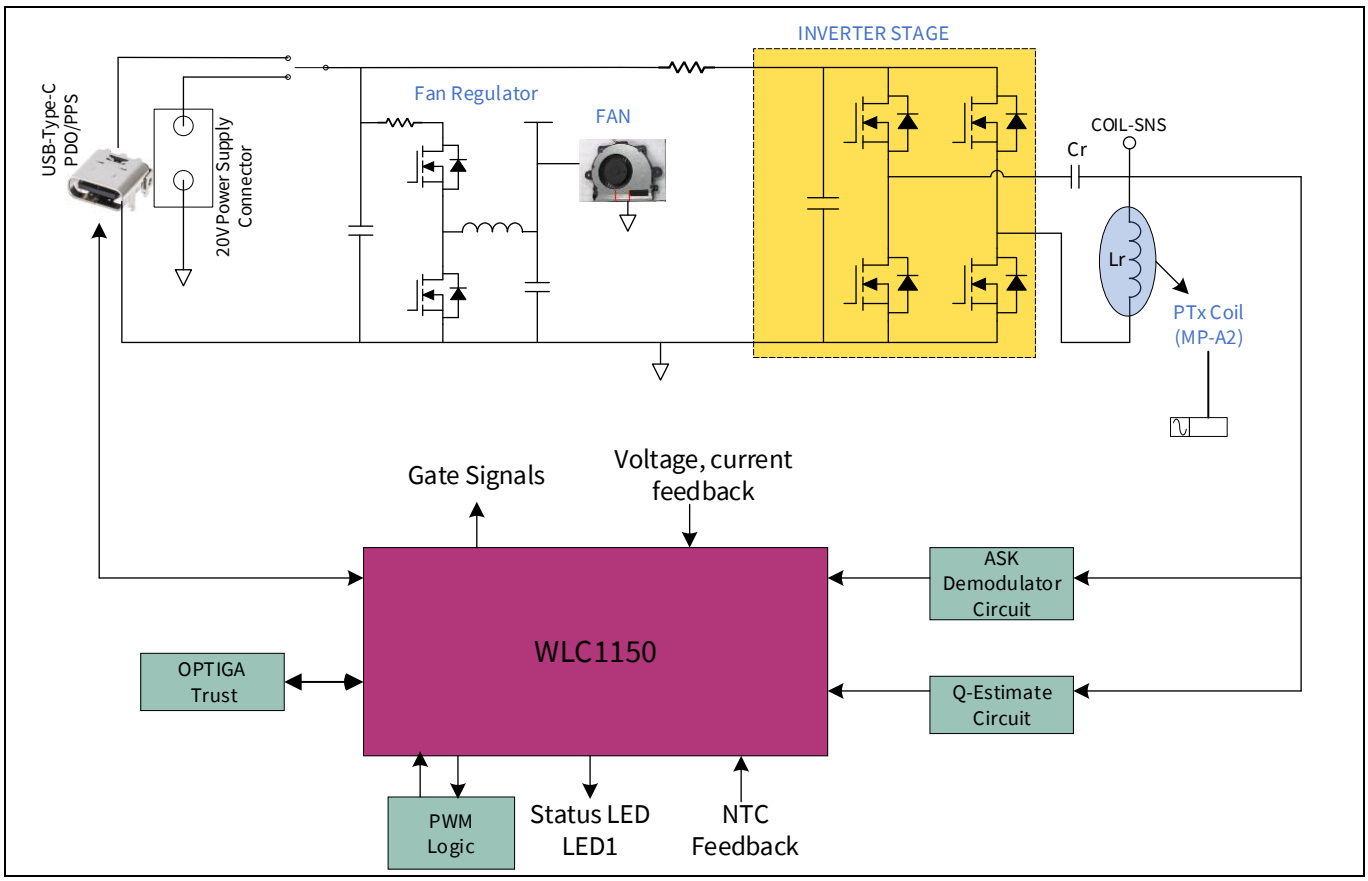

Figure 4 **`REF_WLC_TX50W_N1` power transmitter reference board architecture**

The key features of the reference board are as follows:

1. Qi 1.3.2 compatible
2. Robust ASK and FSK in-band communication between transmitter and receiver
3. Integrated foreign object detection based on system parameters such as Q-factor and power loss
4. Type-C PD Input with PD compliance
5. Wide input voltage ranges from 4.5 V to 24 V
6. Integrated buck converter gate drive and control, operating at a switching frequency of 400 kHz
7. Integrated gate drive for full-bridge inverter operating range of 110 kHz -145 kHz switching frequency
8. MP-A2 coil with variable inverter frequency and duty control
9. Peak efficiency of greater than 83% at full load of 15 W with WRM483265-10F5-12V-G
10. Peak efficiency of greater than 89% at full load of 50 W with REF_WLC_RX50W board

The reference board contains the following key sections:

1. **Input connector** – The Tx board supports two sources of input power (USB PD and DC input) to support different use cases. The board can be powered using a USB-C power adapter over the USB Type-C connector (J1). There is also an option for a DC power supply connection (J3) to deliver power with a High Power

Infineon receiver board (`REF_WLC_RX50W_N1`). Note that at any point in time, only one input power source can be active.

2. **Fan regulator for powering the fan**- The fan regulator is having buck converter stage to regulate VFAN voltage to 5 V for powering the fan.
3. **Fan for thermal management**- The fan is operated for thermal management of the interface surface. It operates when power transfer by Tx is more than 40 W or Tx interface surface temperature is more than 45°C, which is measured by NTC on the Tx board. The fan will turn off after the Tx- power falls below 35 W or coil temperature falls below 40°C.
4. **Inverter stage** – The full-bridge inverter (Q4 to Q7) is operated at a frequency range of 110 kHz – 145 kHz to drive the resonant tank formed by the transmitter coil (Lr) and resonant capacitors (Cr). The coil voltage feedback (COIL-SNS) is used for Q-factor estimation and ASK demodulator circuits.
5. **Transmitter coil assembly** – The transmitter coil is MP-A2 type with specifications per Qi standards. The coil is mounted on a separate coil PCB. A set of PCB shield (Shield PCB TOP and Shield PCB BOT) is mounted on top of the coil and an acrylic sheet form the interface surface of the transmitter. The coil mounting adhesive, spacers, and acrylic thickness are selected such that the distance between the coil top surface and to interface surface is approximately 3.1 mm (Qi specification: 3 mm + 0.5 mm/-0.25 mm). See **Figure 5** for coil assembly details.

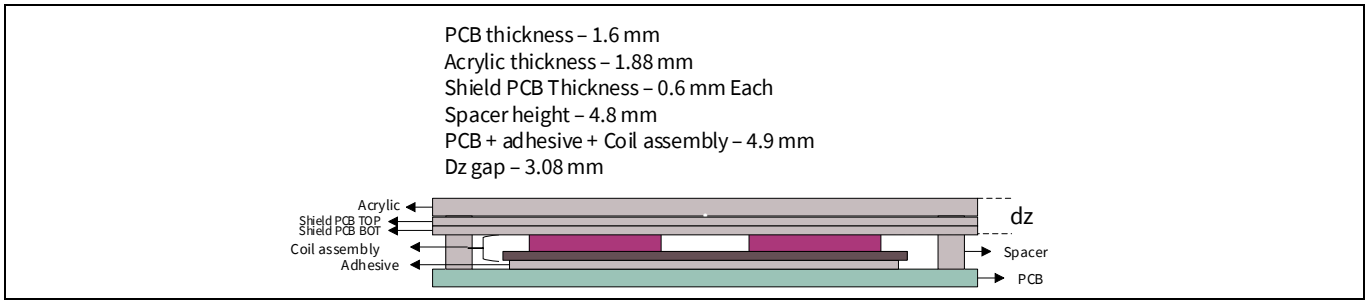

Figure 5 MP-A2 transmitter coil assembly

5. **WLC1150-68LQXQ** – The WLC1150 is a single controller unit to control the transmitter coil and USB PD interface. The WLC1150 simplifies the transmitter board architecture with inbuilt gate drivers for the auxiliary buck and inverter stage, inbuilt LDO for logic and core power, and more features. With an on-chip 32-bit Arm® Cortex®-M0 processor, 128-KB flash, 16-KB RAM, and 32-KB ROM, the firmware supporting the complete high-power proprietary protocol and USB PD state machine logic can be programmed onto the WLC1150 controller.
6. **ASK demodulator** – The ASK demodulator is based on coil voltage and bridge current. The demodulated signal from both paths is processed through a dual opamp-based gain stage and a comparator and decoded by the WLC1150 controller.
7. **Q-factor and resonance frequency estimation** – The Q-factor estimation from coil voltage is performed by WLC1150 through the signal at Q_COMP. The coil voltage is processed through a blocking capacitor, voltage divider, and clamping diode to feed to the WLC1150 controller for Q-factor and resonance frequency estimation.
8. **Status indication** – The firmware indicates the various system states or events using the dual-color (red and blue) status LED (LED1). See the **Reference board operation** to understand more details.

3.1.1 Board connectors

The transmitter board has power and signal connectors for operating and monitoring the wireless power transfer. The function of each connector is listed in **Figure 6**.

Table 2 `REF_WLC_TX50W_N1` board connectors

Connector	Type	Description
J1	Power	USB Type-C connector for DC input through a USB-C power adaptor or QC/AFC type AC/DC adaptor.* This connector is also used to download configuration data/firmware from the Wireless Configuration Utility through HPI dongle over the Type-C CC lines. For more information, see section **4.2.1**.
J3	Power	Wire-to-board connector option for DC input through a variable DC power supply *
J4	Power	Jumper connection to power up the board either with USB PD or DC power supply. Jumper connection Pin 1-2 for PD adapter input. Jumper connection Pin 2-3 for DC power supply.
J5	Signal	Debug serial port. Connect to an HPI dongle (which is provided as part of the reference board package) to view system status on PC using a terminal emulator software (Tera Term, Putty, and so on). The data is sent at a 1-M baud rate.
J2	Signal	SWD connector. This connector is used to monitor, log, and dynamically configure the firmware parameters from the Wireless Configuration Utility through an HPI dongle over I2C lines. For more information, see section **4.2.2**.
J8	Power	A J8 connector is needed to connect with the fan connector. This connector is used to supply power to the fan.
L3	Power	Terminals for transmitter coil connection.

* Do not power the transmitter board from both J1 and J3 simultaneously.

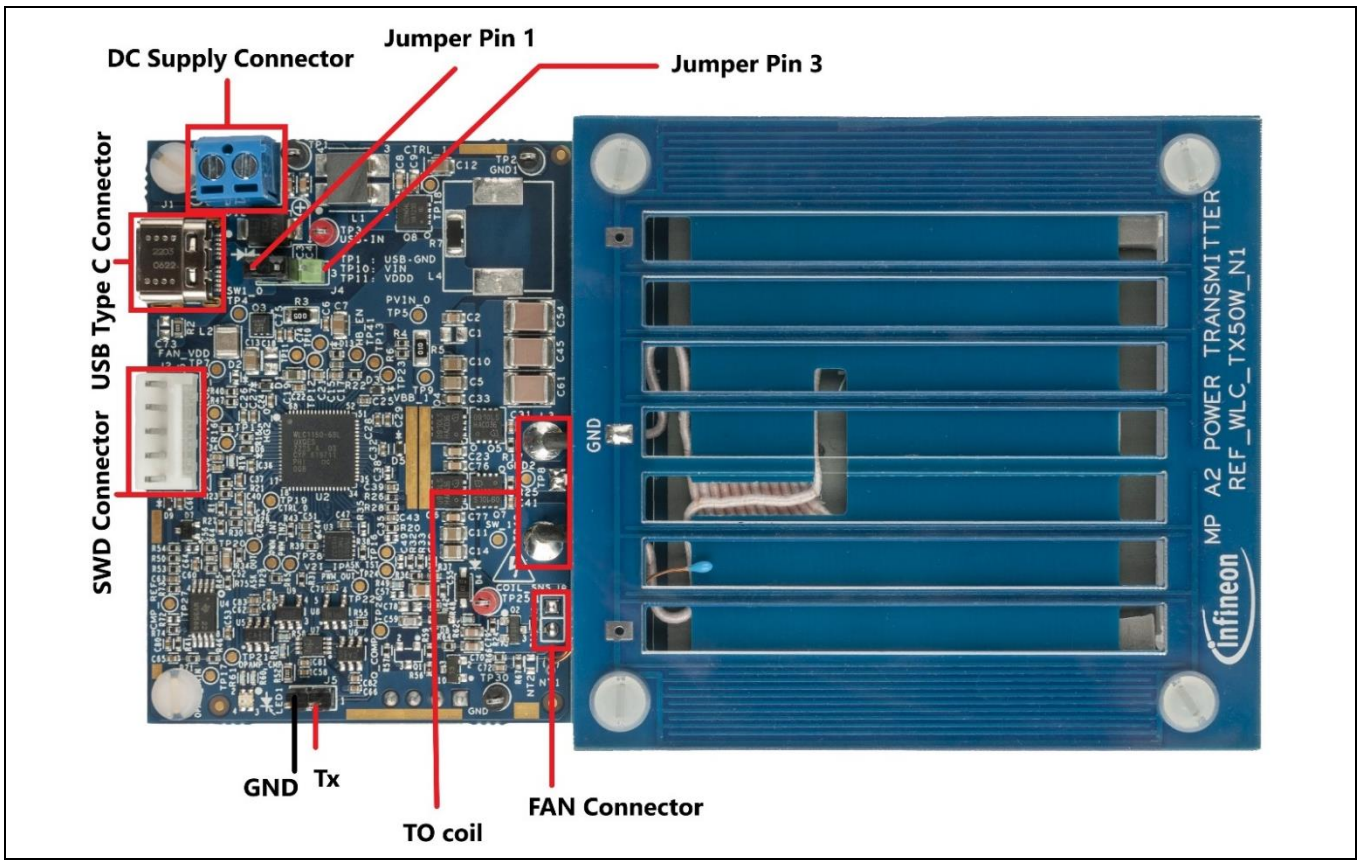

Figure 6 `REF_WLC_TX50W_N1` **power transmitter board power and signal connections**

3.1.2 Test points

The test points in the `REF_WLC_TX50W_N1` MP-A2 power transmitter board assist in monitoring and debugging the wireless power transfer system. The list of test points and their functionality is covered in **Table 3**.

Table 3 **List of test points on** `REF_WLC_TX50W_N1`

Test point name	Section	Description
USB-IN	Power	Input power positive rail
USB-GND	Power	Input power ground rail
PVIN_0	Power – Buck/Inverter	Input positive rail to buck converter and inverter
FAN_VDDD	Power – Buck	Buck stage output for Fan power supply
SW1_0	Power – Buck	Buck stage switching node
HG1_0	Signal – Buck	Buck stage high side MOSFET (Q3) gate signal
LG1_0	Signal – Buck	Buck stage low side MOSFET (Q3) gate signal
VBB_1	Power – Inverter	Input inverter power after the current sense resistor
COIL_SNS	Power – Inverter	Coil voltage; transmitter coil, and resonant capacitor junction point
PWM_OUT	Signal – Inverter	Inverter stage PWM signal
PWM_IN1	Signal – Inverter	PWM logic circuit O/P for inverter MOSFET Leg (Q4, Q5)
PWM_IN2	Signal – Inverter	PWM logic circuit O/P for inverter MOSFET Leg (Q6, Q7)

Test point name	Section	Description
HG1_1	Signal – Inverter	Inverter bank 1 high side MOSFET (Q4) gate signal
LG1_1	Signal – Inverter	Inverter bank 1 low side MOSFET (Q5) gate signal
HG2_1	Signal – Inverter	Inverter bank 2 high side MOSFET (Q6) gate signal
LG2_1	Signal – Inverter	Inverter bank 2 high side MOSFET (Q7) gate signal
Q_COMP	Signal – Q-factor	Scaled coil voltage (for Q-factor measurement)
ASK_OUT	Signal – ASK demodulator	ASK demodulator output from WLC1150 to amplification stage
OPAMP_GAIN	Signal – ASK demodulator	ASK demodulator gain stage amplifier output
CMP_REF	Signal – ASK demodulator	ASK demodulator comparator reference signal
OPAMP_CMP	Signal – ASK demodulator	ASK demodulator comparator output; digital signal to WLC1150
VIN	Power – WLC1150	Power input to WLC1150
VDDD	Power – WLC1150	WLC1150 internal 5-V LDO output
VCCD	Power – WLC1150	WLC1150 internal 1.8 V core LDO output
Q_COMP	Signal – WLC1150	Signal used by WLC1150 for Q-factor estimation
GND1, GND2	Power	Power side ground points
GND	Signal	Control side ground point

Note: For more information, see the reference board's schematic in the REF_WLC_TX50W_N1 release package.

4 Reference board operation

This section explains the procedure to operate the `REF_WLC_TX50W_N1` reference board. It also explains the procedure to configure the firmware in a static or dynamic manner and the procedure to download the configuration or firmware onto the WLC1150-68LQXQ controller.

4.1 Wireless charging operation

The firmware supporting power transfer using USB PD input power is pre-programmed at the time of shipment. The following procedure explains the steps required to do a power transfer using the USB PD input.

4.1.1 Wireless power transfer using Infineon high power protocol mode (50W)

1. Ensure that a jumper shunt is placed at positions 1 and 2 of the power mode selection jumper (J4) of the Tx reference board.
2. Connect the USB Type-C power adapter provided as part of the `REF_WLC_TX50W_N1` package to the USB Type-C connector (J1) of the Tx reference board.
3. Confirm that the status LED (LED1) blinks five times in blue and red. Now the board is ready for use.

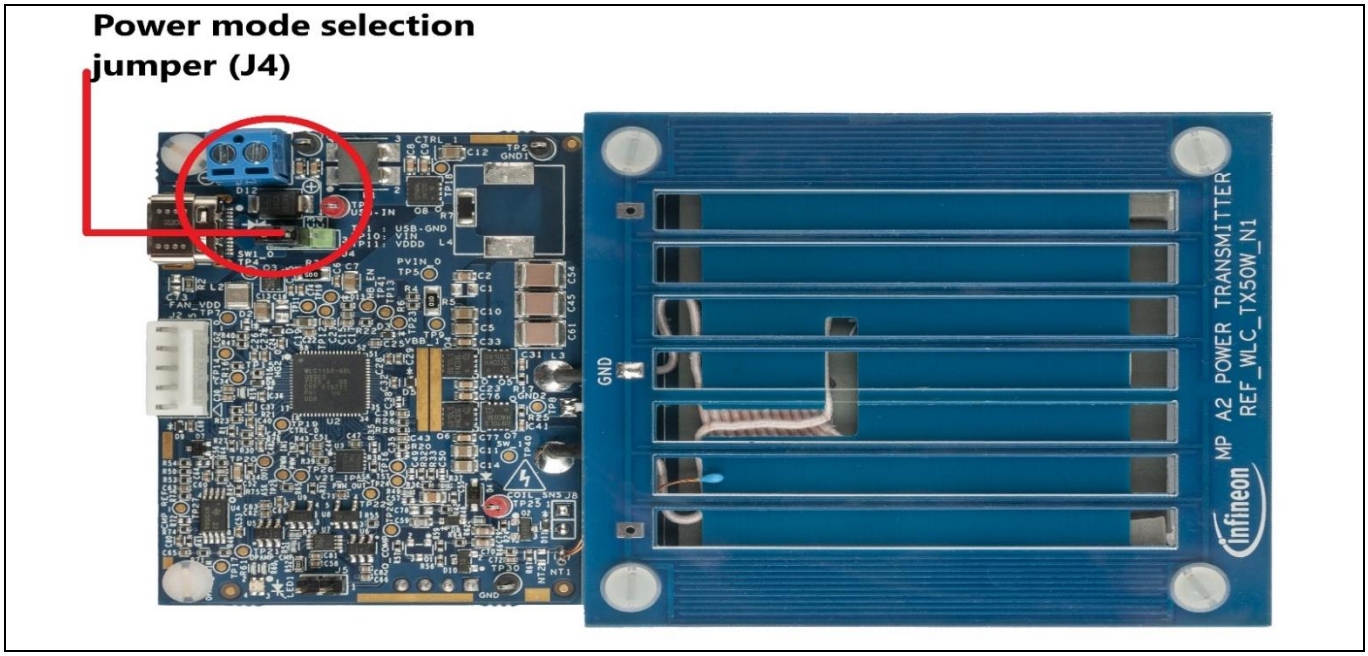

Figure 7 Powering the WLC reference board

4. Place the Infineon 50-W Rx board on the Tx interface of the Tx reference board as shown in **Figure 8**.
5. Attach a load of up to 50W to the terminals of the Rx board. Ensure that the load is in the off state. The status LED (LED1) of the Tx board glows blue when the power transfer is in progress.

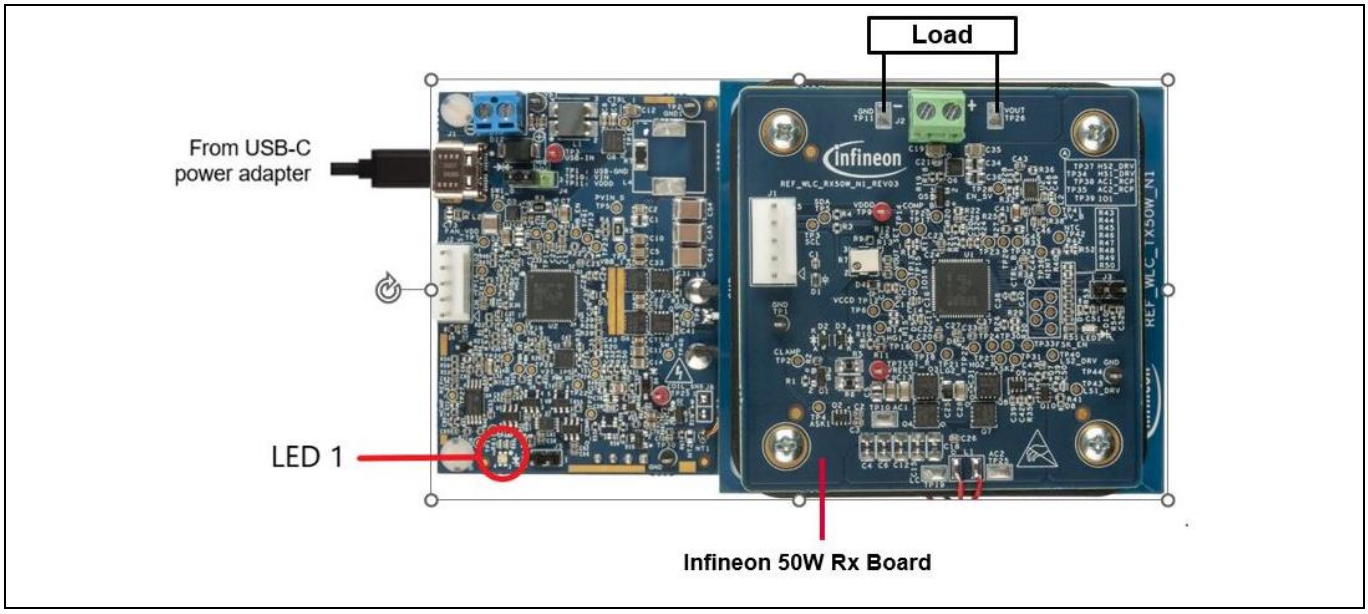

Figure 8 **Wireless power transfer using high power protocol**

Note: *Ensure that the DC load is connected to the Rx board as per the polarity marked on the Rx board.*

6. Increase the load in the maximum step of 20 W to exceed 40 W. Observe that the fan located on the bottom side of the Tx board turns on when the power transferred exceeds 40 W or when the Tx interface surface temperature sensed by the thermistor on the Tx board exceed 45°C to cool the temperature of the Tx interface surface.
7. During the power transfer the load on the Rx board can be varied up to 50-W. However, the maximum step size for load change (application or removal) should not exceed 20-W.
8. Remove the Infineon Rx board from the Tx interface surface of the Tx reference board. Observe that the status LED (LED1) turns off.
9. Disconnect the USB Type-C power adapter once the high-power transfer operation is complete.

Note: *Avoid short circuits of the output load terminal of the Rx board. This may result in damage to the Rx board.*

4.1.2 Wireless power transfer using Qi protocol

The following procedure explains the steps to charging using the Qi protocol.

1. Repeat steps 1 to 3 of section **4.1.1** to exercise the power up the transmitter board.
2. Place the Qi phone/receiver on the Tx interface surface of the Tx reference board as shown in **Figure 9.**
3. The status LED (LED1) of the Tx board glows blue when the power transfer is in progress.
4. Observe that the status LED turns OFF when the phone/receiver is removed from the Tx interface surface or once the phone is fully charged (100%).
5. Disconnect the USB Type-C power adapter once the power transfer operation is complete.

Note: *The status LED continues to glow blue if the phone remains in trickle charging mode after the battery is fully charged.*

Figure 9 **Powering the WLC reference board for Qi Rx/Phone**

4.1.3 System Status and Status LED indication

Table 4 describes the status LED indications for various system states.

Table 4 **System states and status LED indications**

System state	Status LED indication
Idle state	No LED indication
Digital ping phase	Blinks blue
Power delivery in progress	Glows blue
Power Delivery/charge complete	No LED indication
Foreign object (FO) detected	Glows red until FO is removed
Fault during power transfer	Blinks red until the fault is cleared
Abrupt end of power transfer (EPT) initiated by the receiver	Blinks red

Note: *The `REF_WLC_TX50W_N1` reference board with factory default firmware may exhibit timeout-bound retry of Qi power contract under extremely noisy ASK modulated signal conditions with a few phones/receivers. Such behavior does not affect wireless charging performance. See the REF_WLC_TX50W_N1 reference board's test report for more details about the phone charging cycle, ASK demodulation, and Qi 1.3.2 compliance test results. Download this report from the `REF_WLC_TX50W_N1` reference board webpage* ***[1]****.*

4.1.4 Troubleshooting

See **Table 5** for troubleshooting the potential issues faced while operating the WLC 50 W Tx reference board.

Table 5 Troubleshooting of the WLC 50W Tx reference board operation

#	Issue	Possible cause	Fix
1	The power transfer between the transmitter and receiver stops soon after it begins and the status LED (LED1) glows red.	There might be a foreign object (FO) present on the interface surface	Remove the receiver from the interface surface and verify for any FO presence and retry placing the receiver on the interface surface.
2	The receiver reference board REF_WLC_RX50W_N1 does not provide output power and debug logs show EPT121.	The receiver has terminated the power transfer because of a potential fault in the receiver	Power recycle the transmitter and retry. In case the issue persists, contact **Infineon technical support**.
3	The phone is not charging when placed on the interface surface of the WLC reference board.	The phone may not be a Qi-compliant phone.	Check with the phone manufacturer on Qi compatibility. Get a Qi-compliant phone.
4	The phone is charging at a slow rate.	The phone may not support Qi EPP capability.	Check with the phone manufacturer on support for EPP capability. Get a phone which can support EPP to charge at 15 W.
5	During high power transfer (> 15W), there is a momentary power reset during start of the power transfer at the load side on the receiver (REF_WLC_RX_50W_N1).	The transmitter (REF_WLC_TX_50W_N1) may have observed higher power loss compared to the estimated loss. So, the transmitter shall check the possibility of FO presence by measuring the Q-factor. If no FO is detected, the transmitter enters the power delivery mode, calibrates for high power loss, and proceeds with charging. This process is repeated every time the receiver is placed on the charging area.	Ensure that no FO is present on the charging surface of the transmitter Ensure the receiver is well-aligned on the transmitter's charging surface and try again. If the issue is persistent, calibrate the system for power loss FOD (Foreign Object Detection). Follow the instructions given in **Appendix B: Procedure to do calibration for power loss FOD** to complete the power loss FOD calibration.

Note: By default, the `REF_WLC_TX50W_N1` reference board is loaded with firmware that supports USB PD-based power input. However, the reference board can be used for wireless power transfer with high power protocol (50 W) using a DC supply, requiring a different firmware. See Appendix A to understand the procedure for Wireless power transfer by using High power protocol (50 W) mode with a DC input power supply.

4.2 Firmware download, configuration (static/dynamic), and monitoring/debugging

WLC1150 IC is a programmable controller, which supports downloading the updated/modified configuration data and downloading the firmware. It also supports monitoring the firmware parameters and dynamic tuning of the firmware parameters. The WLC1150 controller supports these features through CC and/or I2C interfaces based on the input power type supported in the current firmware, which is stored in the flash. See **Table 6** to understand the communication interface (CC/I2C) to use based on the current firmware type.

Table 6 Communication interface (CC/I2C) to use for firmware download and configuration

Scenario #	Input power type supported by the current firmware stored in flash	Communication interface for downloading firmware/ configuration data	Communication interface for monitoring firmware parameters and dynamically configuring them
1	USB PD	CC /I2C	I2C
2	DC	I2C	

4.2.1 USB CC communication-based set-up

Figure 10 describes the set-up to download configuration data or firmware over the USB CC interface of the WLC1150 controller.

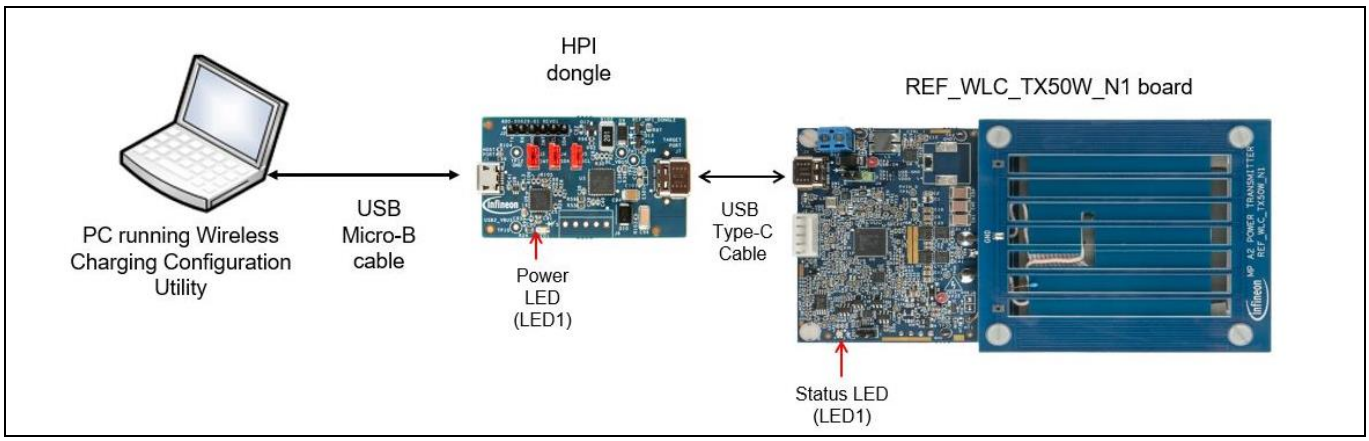

Figure 10 USB CC communication-based setup

Execute the following procedure to create the setup:

1. Ensure that a jumper shunt is placed at positions 1 and 2 of the power mode selection jumper (J4) of the Tx reference board.
2. Connect the HPI dongle to the Tx reference board using the USB Type-C cable.
3. Connect the HPI dongle to the PC using a USB micro-B cable.
4. The Power LED (LED1) on the HPI dongle glows blue, and the status LED (LED1) on the WLC1150 reference board blinks in blue and red five times.
5. Open the **Wireless Charging Configuration Utility** from the **Start** menu in Windows.
6. Confirm that the reference board is selected under the **Device Selection** tab, as shown in **Figure 11**.

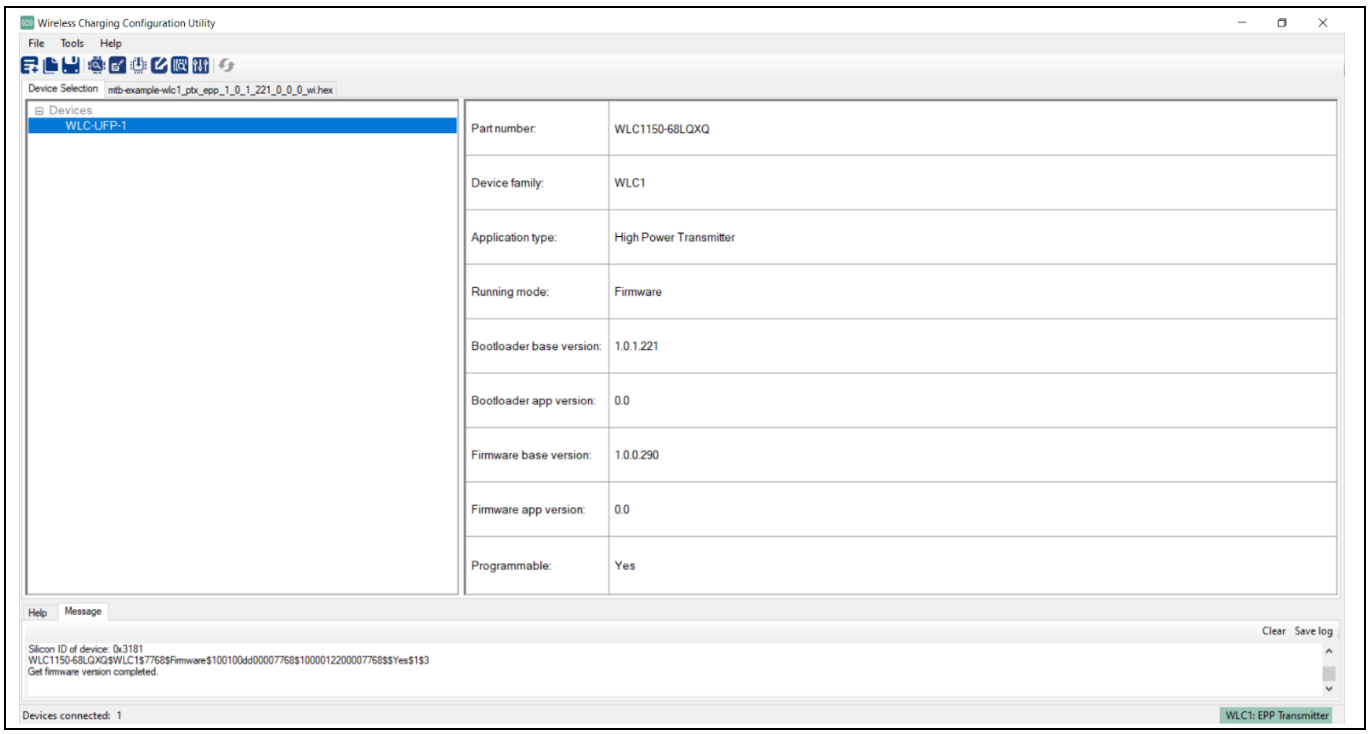

Figure 11 **Selecting WLC1150 device in Wireless Charging Configuration Utility**

7. Go to **Tools** > **Firmware Update** or select the Firmware Update option from the Home panel. Specify the path for the firmware as shown in **Figure 12** and click **Program**.

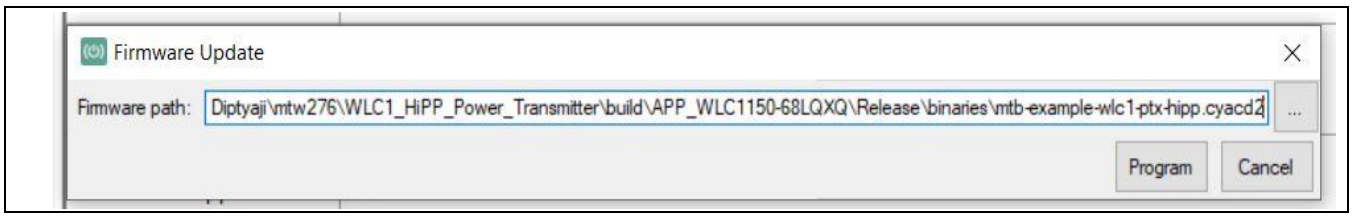

Figure 12 **Selecting firmware for download**

8. Wait for the firmware download to complete, as shown in **Figure 13**. This operation may take around one minute.

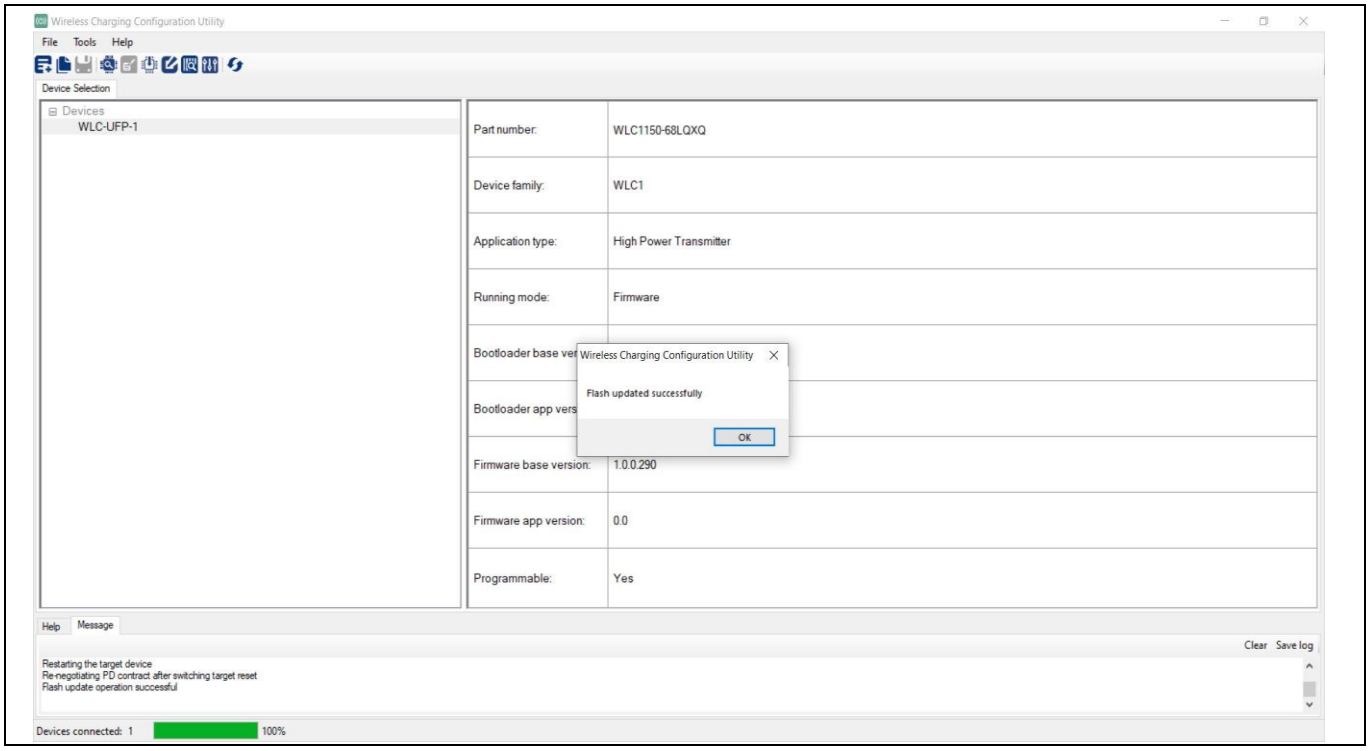

Figure 13 Downloading firmware to WLC1150 controller

9. Dismantle the hardware connection between HPI Dongle, PC, and Tx reference board.

4.2.2 I2C communication-based setup

Figure 14 describes the setup to download firmware/configuration or monitor firmware parameters or dynamically tune the firmware parameters over the I2C interface of the WLC1150 controller.

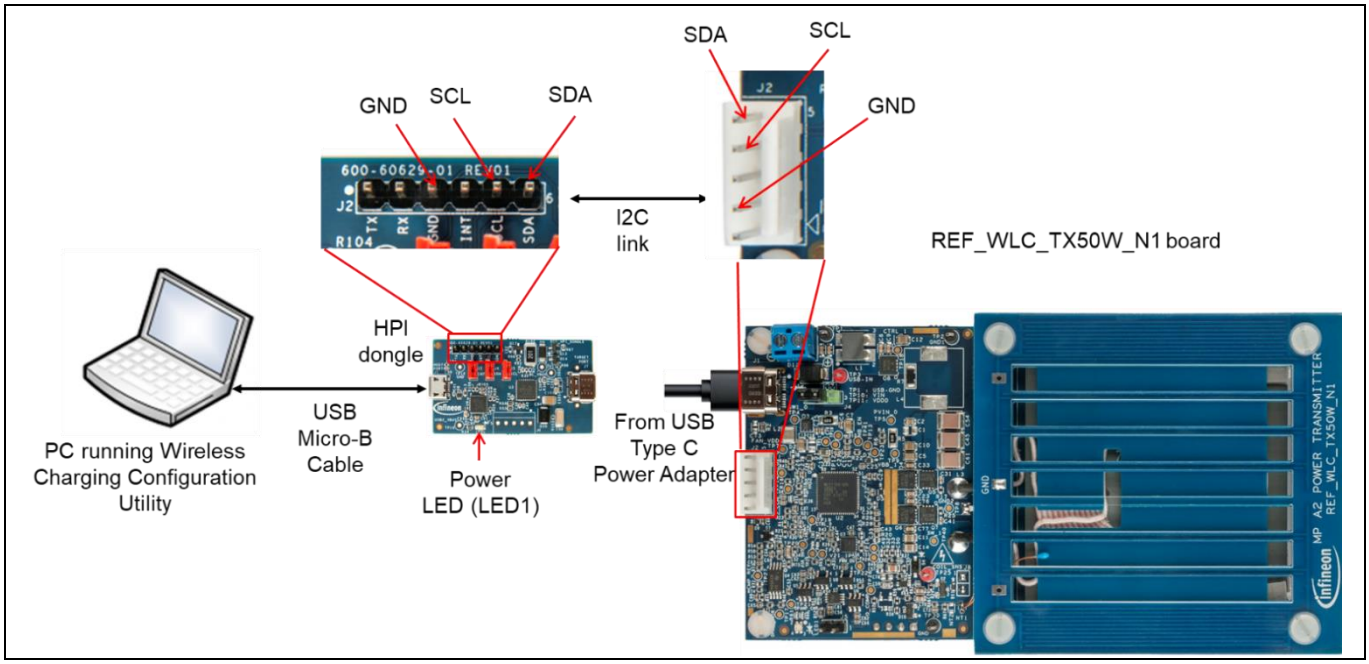

Figure 14 I2C communication-based setup

Execute the following procedure to create the setup:

1. Establish an I2C connection between the WLC1150 reference board and the HPI dongle by connecting the three jumper wires.
   a) Connect a jumper wire between the SCL pin of the HPI dongle (pin no. 5 of the J2 header) and the HPI_I2C_SCL pin of the WLC1150 reference board (pin no. 4 of the J2 header).
   b) Connect a jumper wire between the SDA pin of the HPI dongle (pin no. 6 of the J2 header) and the HPI_I2C_SDA pin of the WLC1150 reference board (pin no. 5 of the J2 header).
   c) Connect a jumper wire between the GND pin of the HPI dongle (pin no. 3 of the J2 header) and the GND pin of the WLC1150 reference board (pin no. 2 of the J2 header).
2. Ensure that a jumper shunt is placed at positions 1 and 2 of the power mode selection jumper (J4) of the Tx reference board
3. Connect the HPI dongle to the PC using a USB micro-B cable.
4. The Power LED (LED1) on the HPI dongle glows blue.
5. Connect the 65 W USB Type-C power adapter to the Tx reference board using the USB Type-C cable. The status LED (LED1) on the WLC1150 reference board blinks in blue and red five times.
6. Now the setup is ready for use by the Wireless Charging Configuration Utility.
7. See the Wireless Charging Utility user guide to understand the procedure to monitor firmware parameters, dynamically tune the firmware parameters, and download firmware/configuration data/monitor and dubbing. The utility user guide can be accessed from the Help menu of the utility.
8. Dismantle the hardware connection between the HPI dongle, PC, and Tx reference board.

4.3 Capturing debug logs on the WLC reference board

This section explains the procedure to capture the debug logs sent on the serial port of the `REF_WLC_TX50W_N1` reference board at various stages of the operation. This feature helps to understand the internal operation of the firmware in addition to the status LED indication available on the board.

To capture the debug log, follow these steps:

1. Install data logging software on the PC.
   a) Download a data logging tool, such as Tera Term, and install it on the PC.
2. Enable the debug log in the firmware.
   a) Download the Wireless Charging Utility package from the `REF_WLC_TX50W_N1` release package and install it on the PC.
   b) Create the USB CC communication-based (**Figure 10**) or I2C communication-based (**Figure 14**) hardware set-up to configure the firmware using Wireless Charging Configuration Utility.
   c) Open the **Wireless Charging Configuration Utility** from the **Start** menu in Windows.
   d) Confirm that the reference board is selected under the **Device Selection** tab, as shown in **Figure 15**.

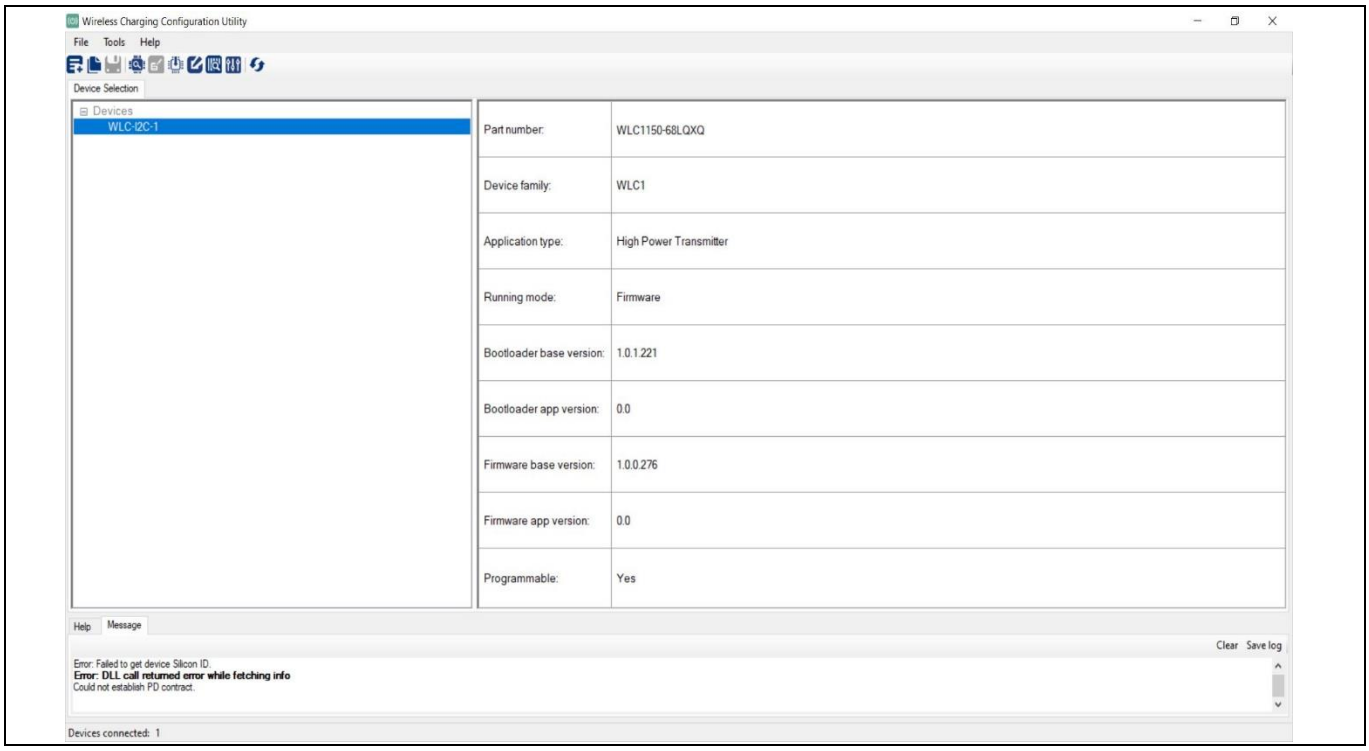

Figure 15 Selective device in Wireless Charging Configuration Utility

   e) Click **Tools** > **Read from Device** or select the **Read from Device** option from the Home panel. This enables the user to read the configuration from the device.
   f) The debug log can be enabled by configuring the following parameters in the transmitter Profile page in the Wireless Charging Configuration Utility, see **Figure 16**.
      - Enable **Critical log enable**
      - Enable **Message log enable**
      - Set **Debug log** to **Level 1**

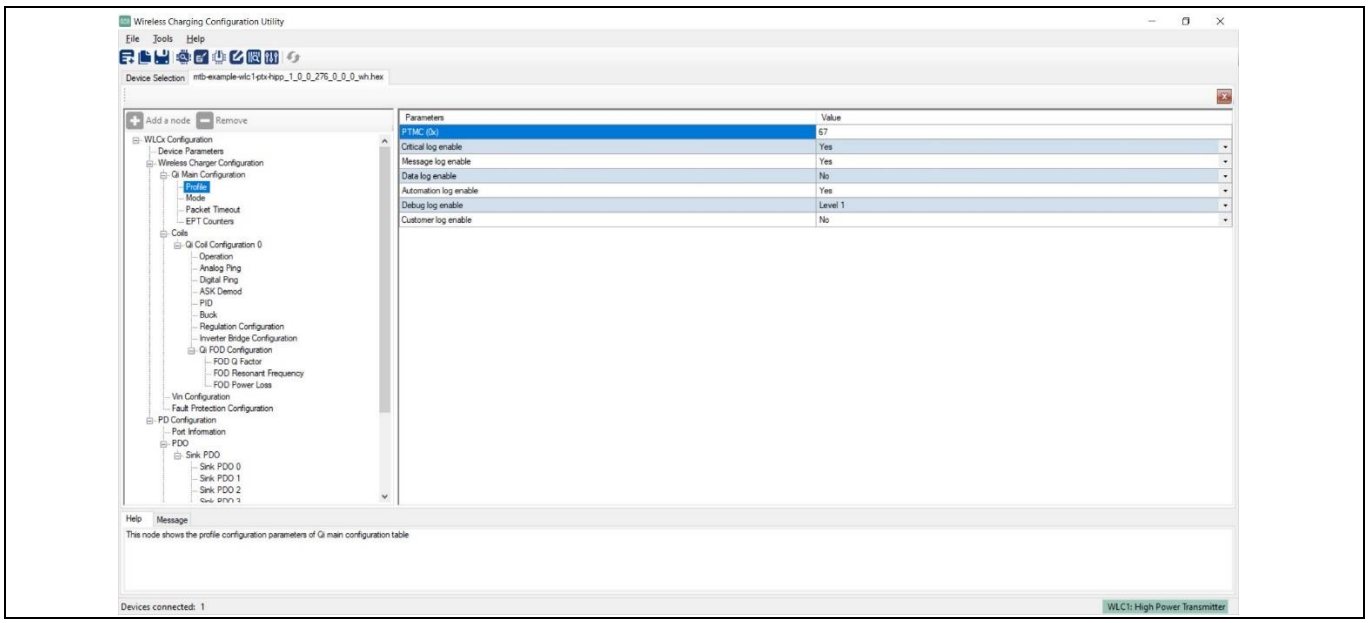

Figure 16 Profile page settings for enabling debug log

g) Select the device in the **Device Selection** tab and select **Tools** > **Configure Device** or click on the **Configure device** icon present in the Home panel. Save the updated configuration to a file.

h) In the **Configure Device** dialog box, specify the path of the updated configuration file and click **Program**, as shown in **Figure 17**.

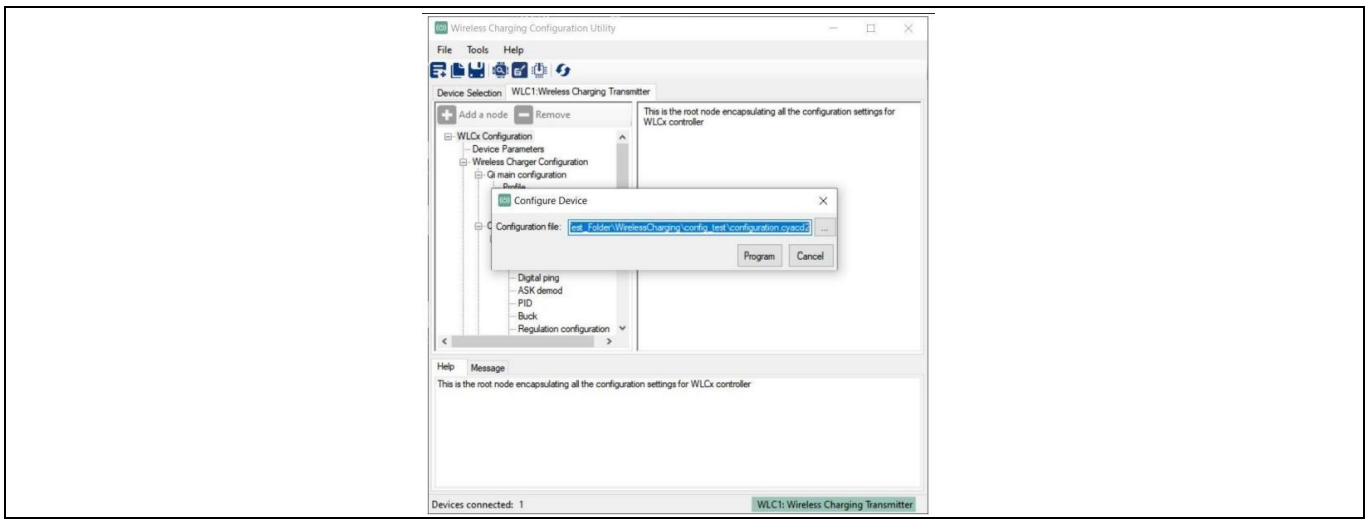

Figure 17 Device configuration dialog

i) Wait until the updated configuration file gets downloaded, as shown in **Figure 18**.

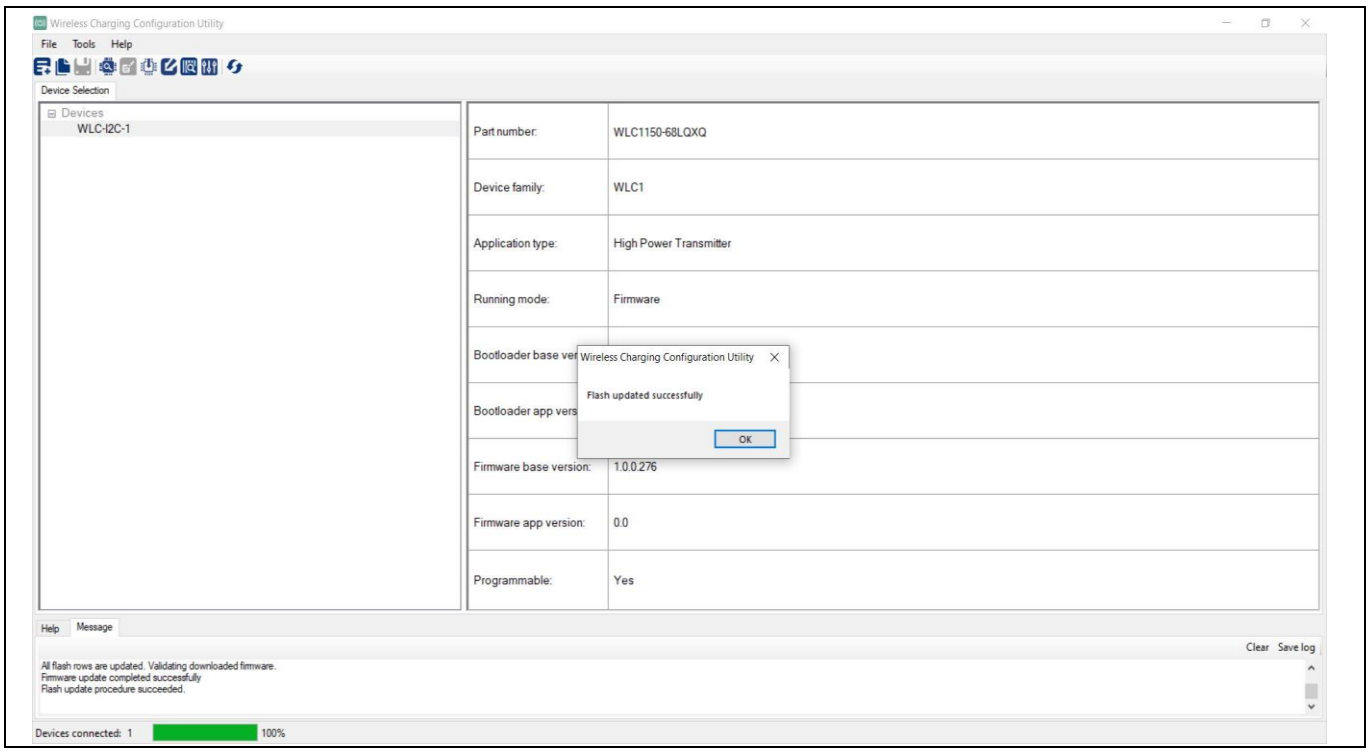

Figure 18 Successful download of configuration file

j) Dismantle the hardware setup.

3. Debug log capture setup.
   a) Do the following connections using jumper wires to establish a serial connection between the `REF_WLC_TX50W_N1` board and the HPI dongle:
      - Connect a jumper wire between the UART_Tx pin of J5 of the `REF_WLC_TX50W_N1` board and the Rx pin of the J2 header on the HPI dongle board.
      - Connect a jumper wire between the GND pin of J5 of the `REF_WLC_TX50W_N1` board and the GND pin of the J2 header on the HPI dongle board.

   b) Connect `REF_WLC_TX50W_N1`, HPI dongle, and PC as shown in **Figure 19**.

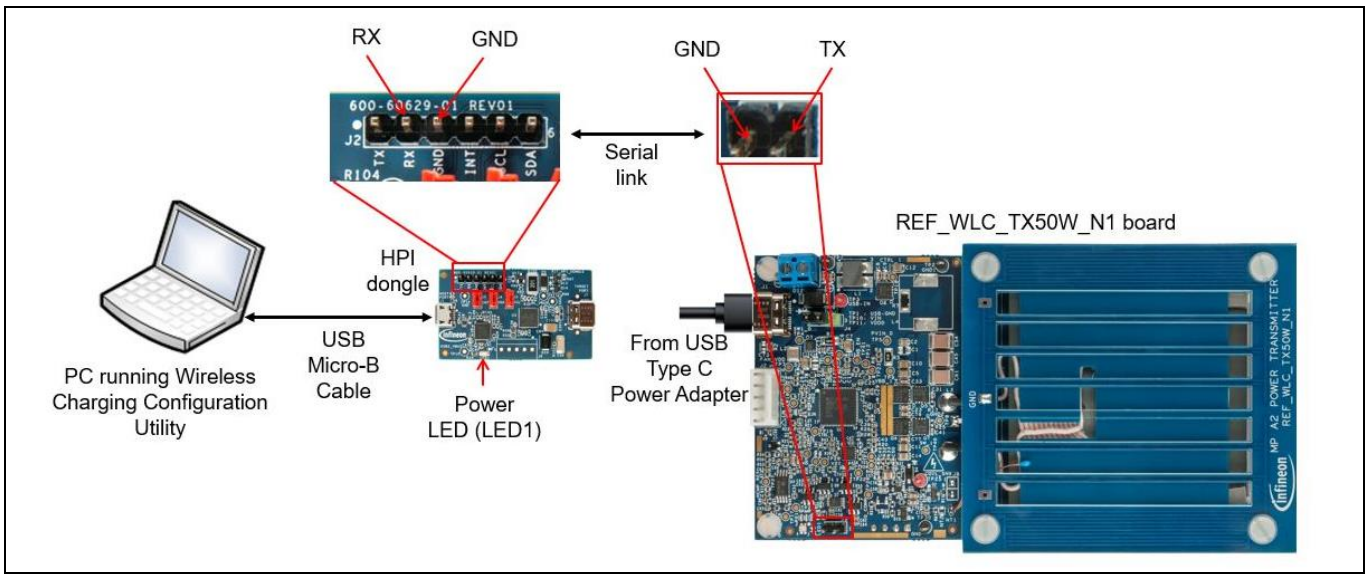

Figure 19 Setup for capturing debug log

4. Capture debug logs.
   a) Open the Tera Term on the Windows PC and select the virtual serial port listed on the Tera Term tool.
   b) Set the baud rate to 1000000. Set the remaining settings as default, as shown in **Figure 20**.

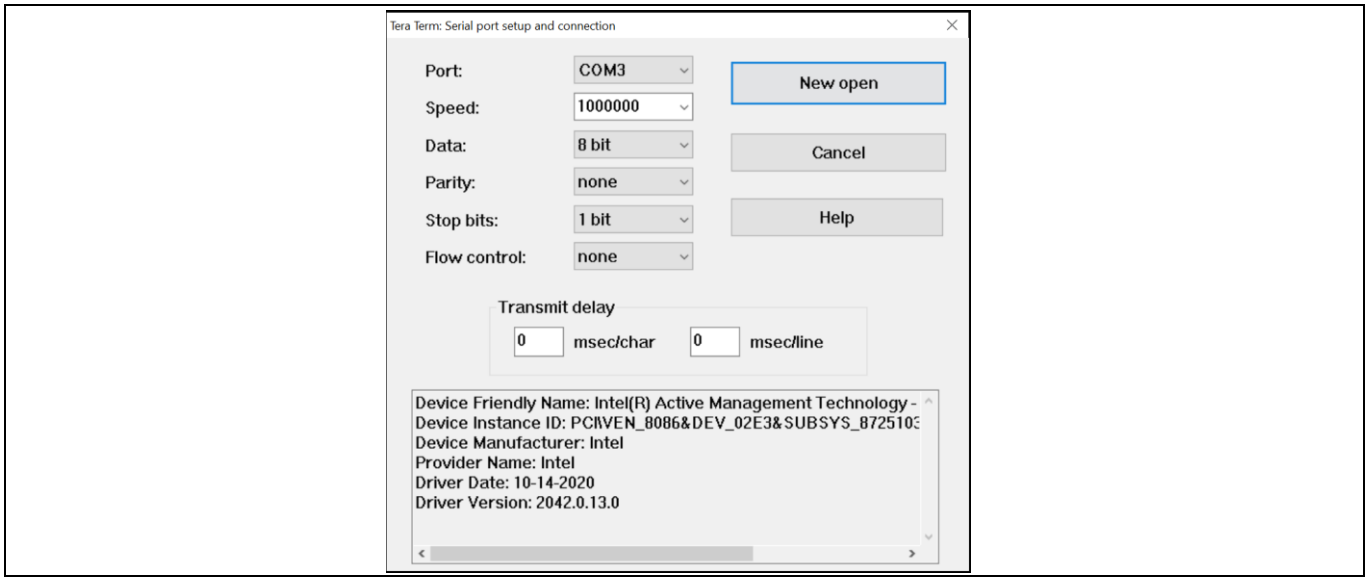

Figure 20 Tera Term settings

   c) Supply power to the `REF_WLC_TX50W_N1` board using the USB-C power adapter and recreate the usage condition during which the debug logs need to be captured. Displays the log data on the Tera Term as shown in **Figure 21**.

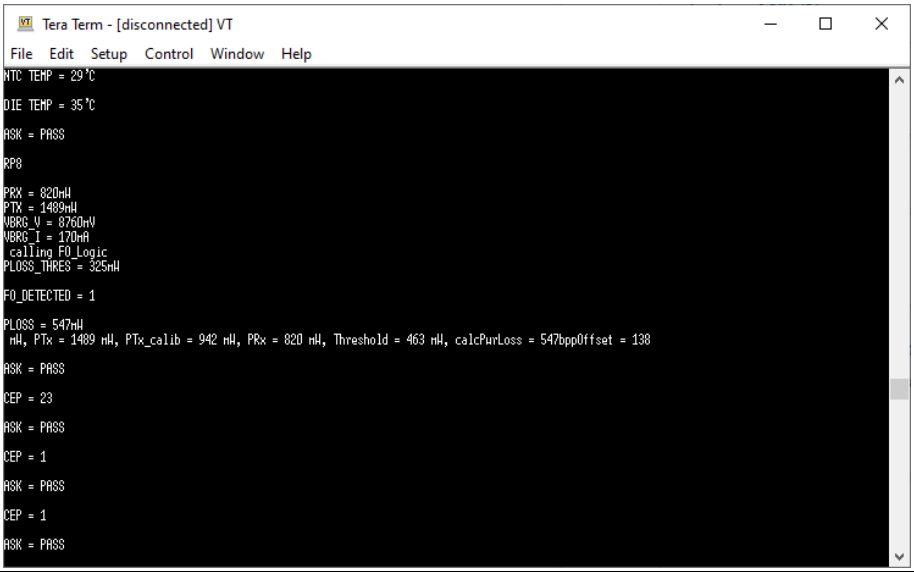

Figure 21 Debug log output

d) Save the log into a file from Tera Term.

e) Contact **Infineon technical support** with the captured log files if additional support is required.

Note: If the temperature around the NTC goes below 25°C, it is not required to monitor as the transmitter is working in a safe operating region. Therefore, the debug log shows the value of NTC TEMP as 25°C until the temperature around the NTC does not exceed 25°C.

5. Disable debug log in the firmware.

Revert these changes in firmware to default on completion of the process. The debug log consumes the processor resource, and it is recommended to disable the debug log for optimal performance of the WLC power transmitter.

5 Appendix A: Wireless power transfer by using high power protocol (50W) mode with DC input power supply

This section explains the procedure to enable DC input power-based wireless charging operation for high power protocol (50W) mode.

Do the following procedure to update the reference board and download the firmware which supports DC input power-based operation, and exercise the wireless charging operation for high power protocol (50W) mode:

1. Identify the firmware intended for the DC power supply from the README file in the `REF_WLC_TX50W_N1` release package.
2. Download the firmware using the procedure mentioned in section **4.2**.
3. Install the jumper shunt at positions 2 and 3 of the power mode selection jumper (J4) of the Tx reference board.
4. Connect the DC supply to the DC input connector (J1) of the Tx reference board. Ensure that the DC input is connected according to the polarity marked on the Tx reference board.
5. Confirm that the status LED (LED1) blinks five times in blue and red. Now the board is ready for use.
6. Repeat Steps 4 to 7 of section **4.1.1** to exercise 50 W power transfer capability.
7. Disconnect the DC supply once the high-power transfer operation is complete.

6 Appendix B: Procedure to do calibration for power loss FOD

This section explains the calibration procedure for power loss FOD.

1. Connect the device over the I2C interface and power up the device using the Type C power adapter. Place the jumper for the J4 connector between Pin1 and Pin2 (see **Figure 22**).

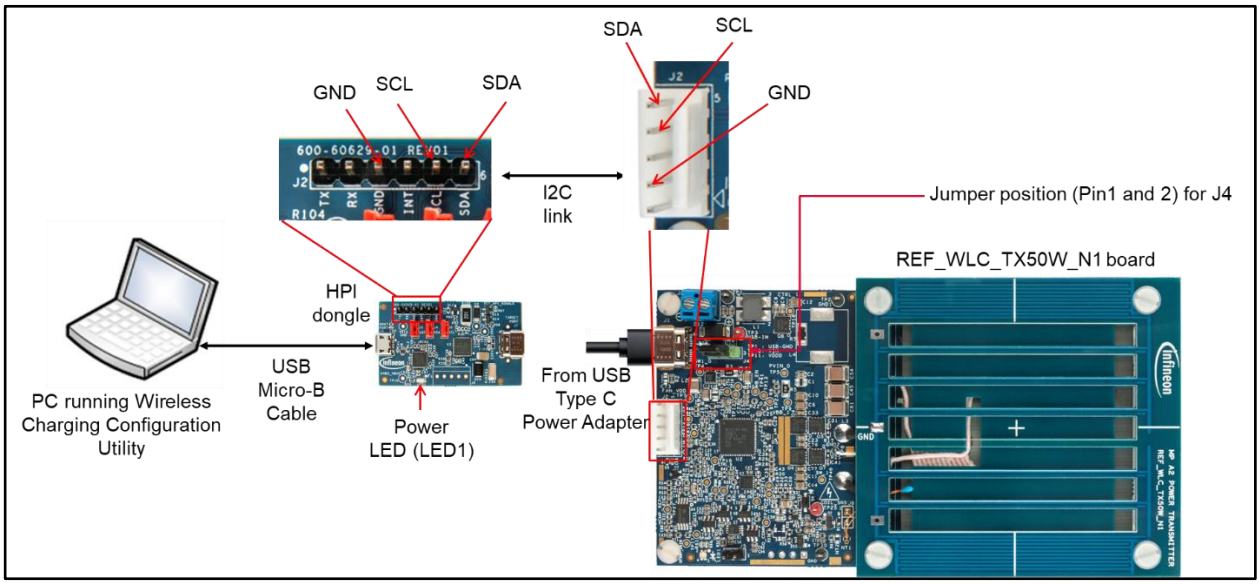

Figure 22 I2C interface connection set up

2. Open the Wireless Charging Configuration utility and select the device (WLC-I2C-1) from the device selection tab (see **Figure 23**).

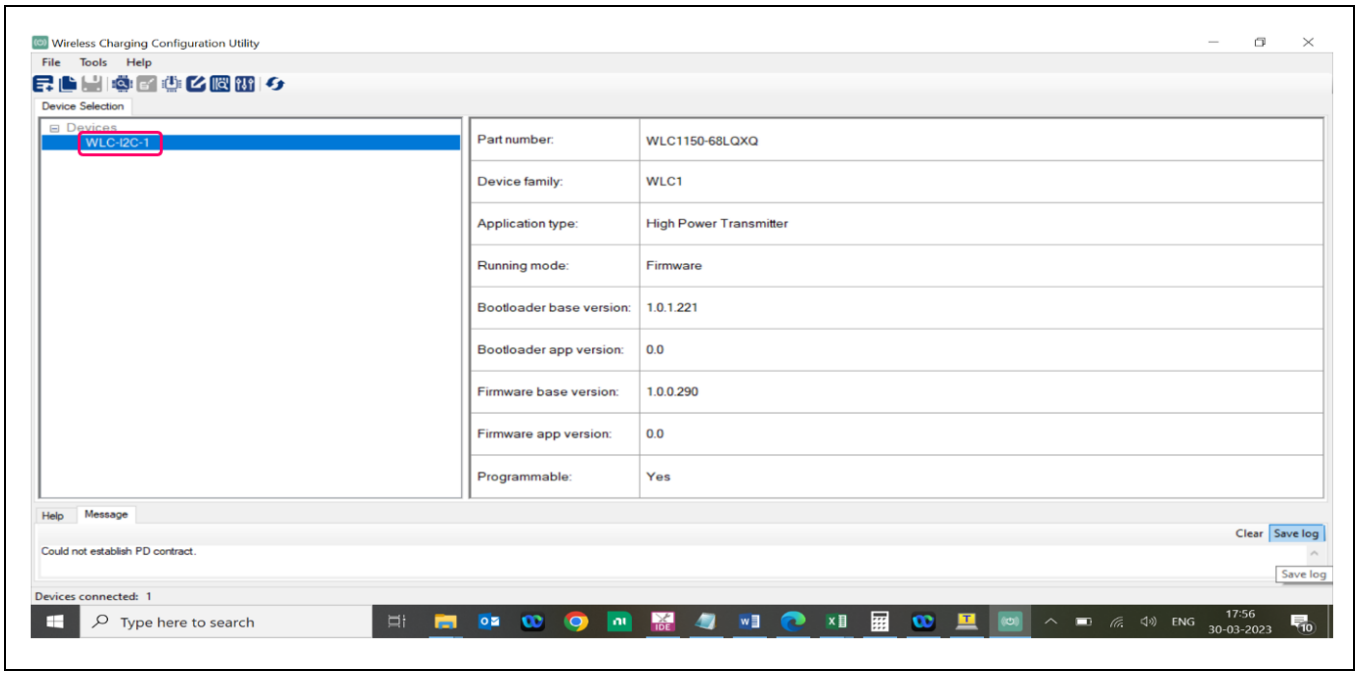

Figure 23 Invoking Wireless Charing Configuration utility

3 Go to **Tools** > **Option**, and check the box for "Enable advanced configuration parameters" and click **Save** (see **Figure 24).**

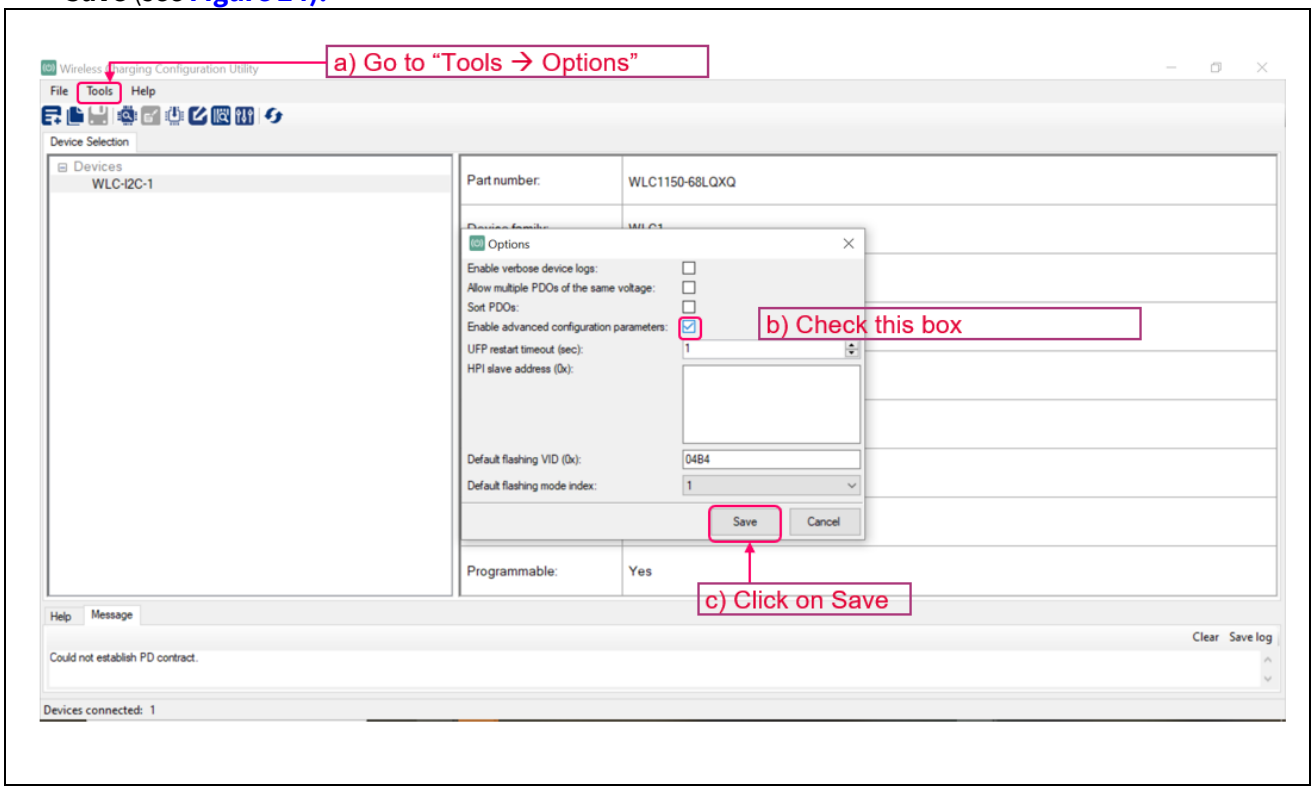

Figure 24 Enabling advanced configuration parameters

4 Click on the "Read from device" icon, select FOD Power Loss, and disable the power loss FOD by selecting **Disable** under the drop-down menu (refer to **Figure 25**).

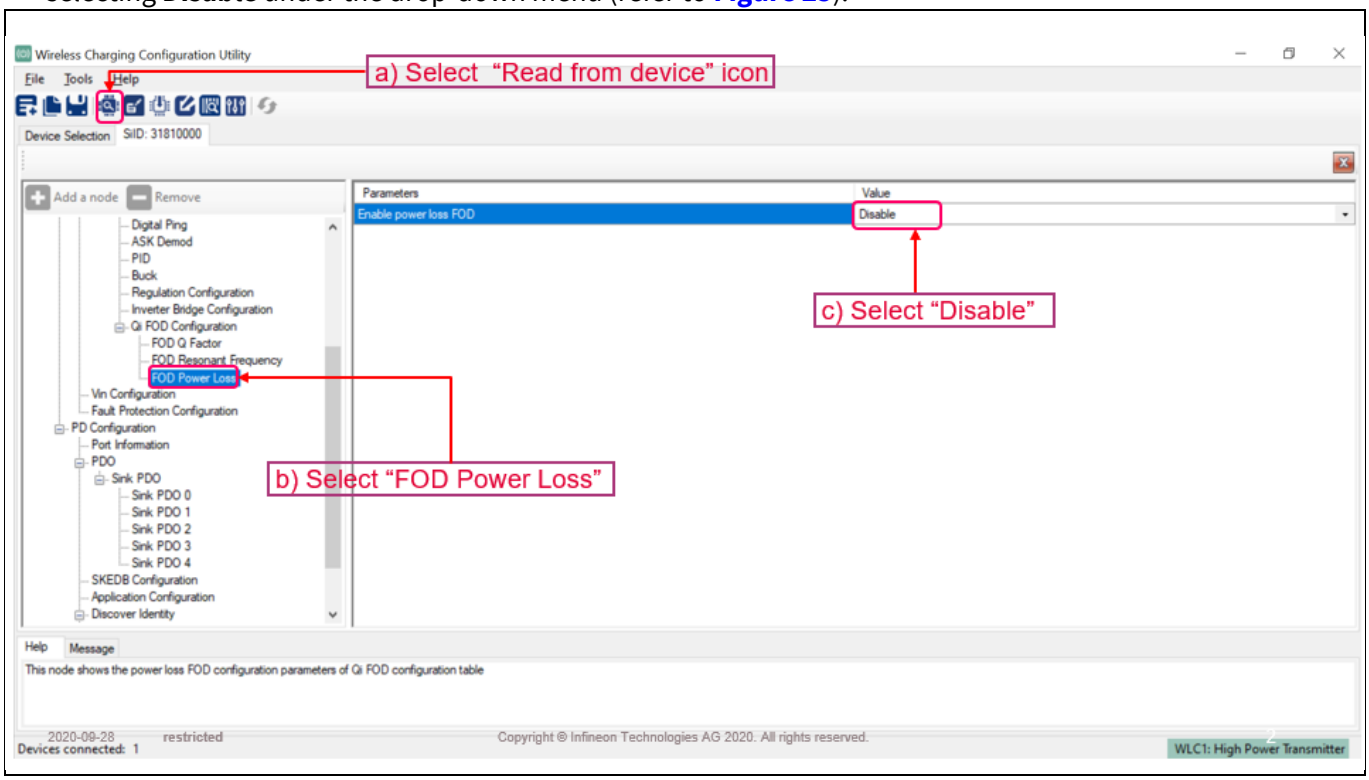

Figure 25 Disabling power loss FOD

5. Go to Tools and select “Configure Device” (refer to **Figure 26**).

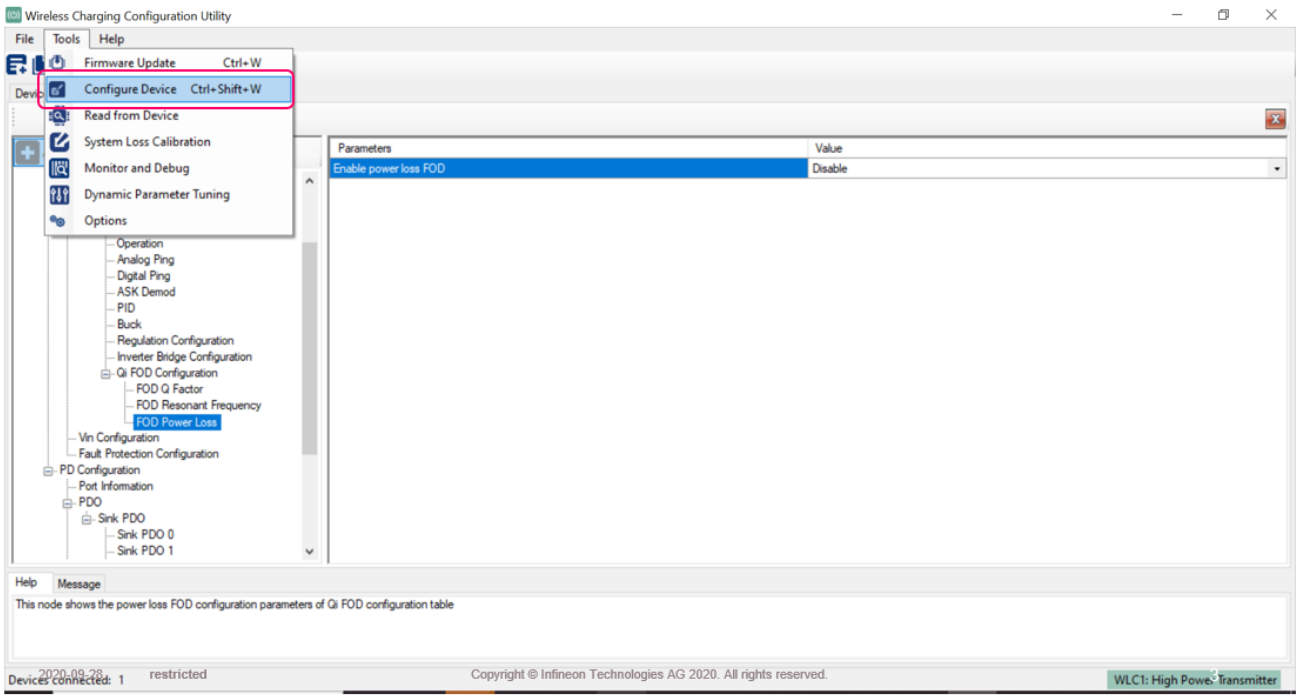

Figure 26 Selecting configure device

6. A pop-up window will appear prompting you to save the configuration. Select “Yes” and save the file with an appropriate name, such as “FOD Disable” (refer to **Figure 27**).

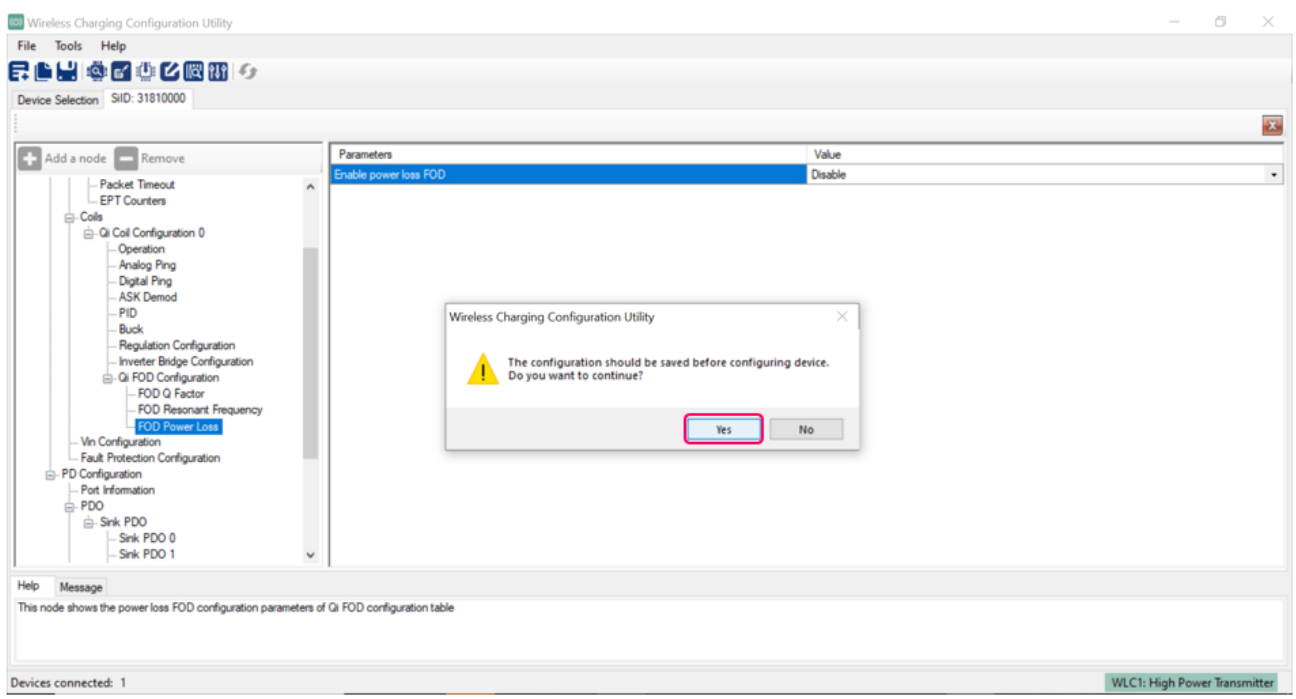

Figure 27 Disabling the FOD

7. After saving the configuration file, the “Configure device” dialog box pops up. Click on “Program”. After the program completion, the message “Flash updated successfully” is displayed.

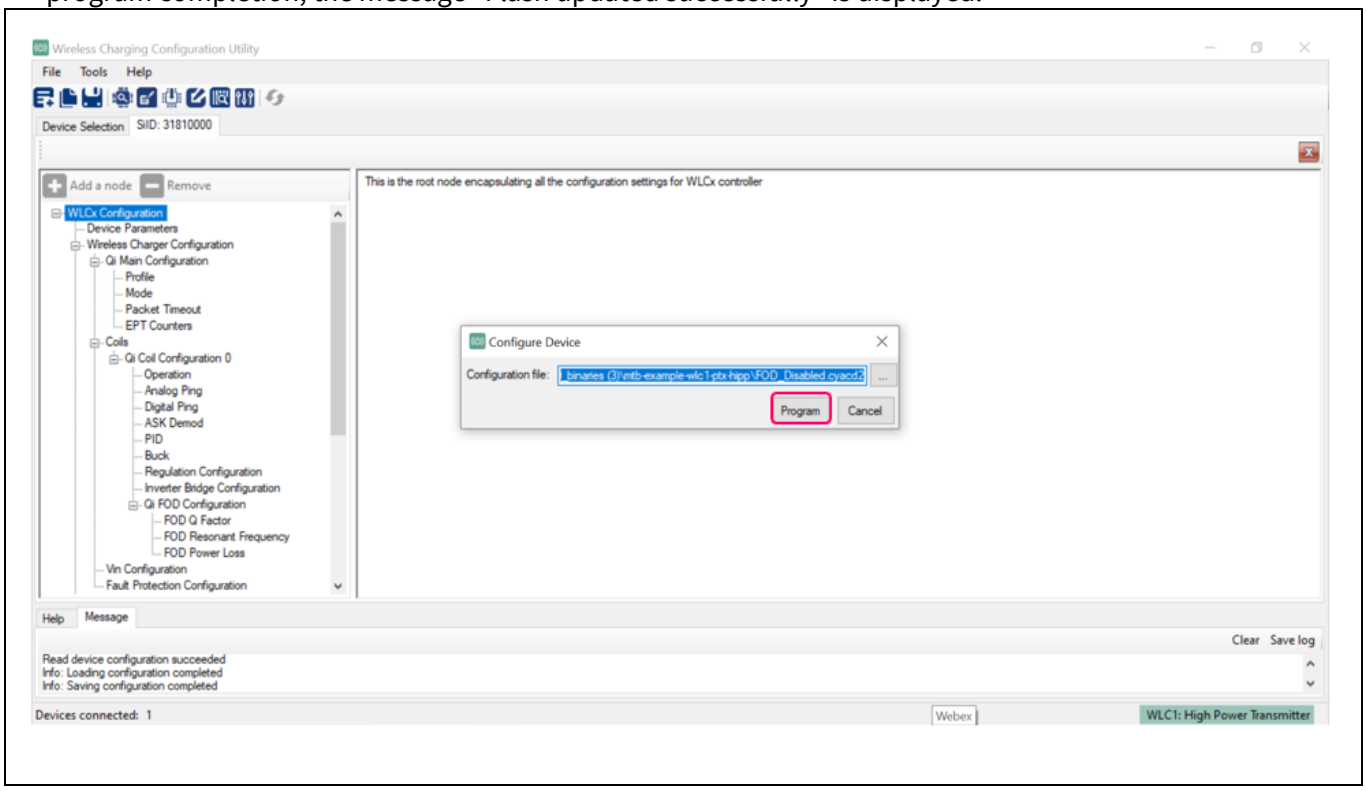

Figure 28 Saving the configuration setting

8. Place the receiver on the transmitter coil interface at a well-aligned position. Do not move the receiver during the entire calibration process. Connect the electronic load (minimum of 24V and 3A rated) to the receiver load connector terminal. Ensure that the receiver board has powered-up which is indicated by the status LED that glows blue (refer to **Figure 29**).

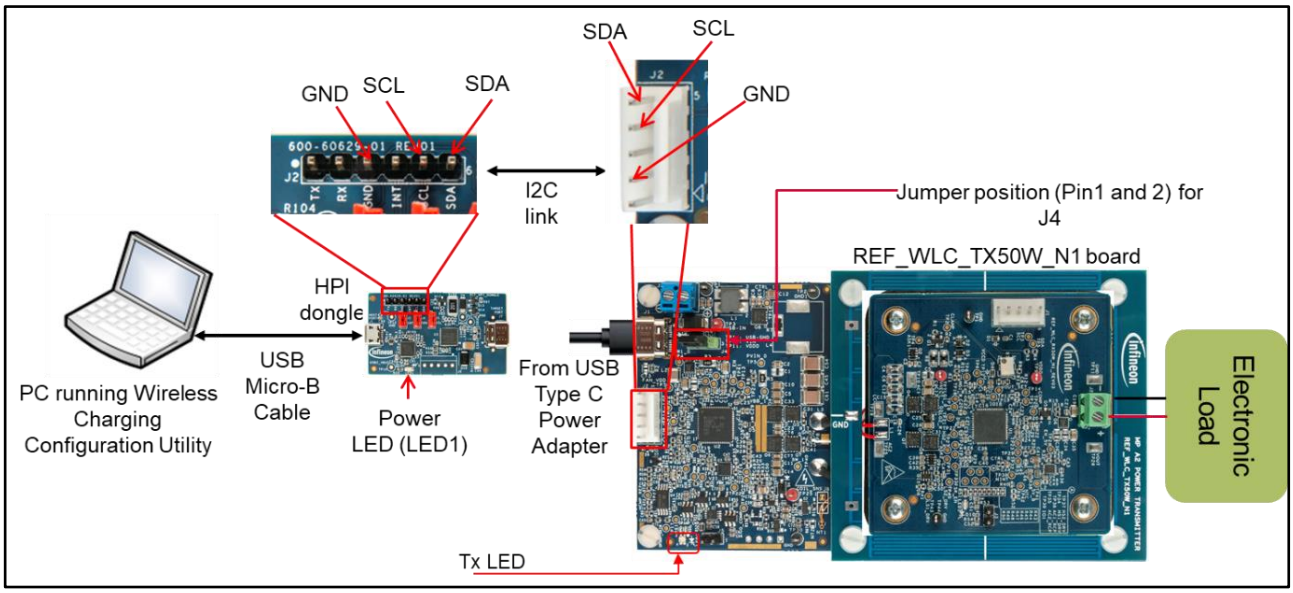

Figure 29 Set up for power loss calibration

9. Go to the “System Loss Calibration” tab and select the “High power proprietary protocol calibration” from the “Test power receiver type” drop-down menu (refer to **Figure 30**).

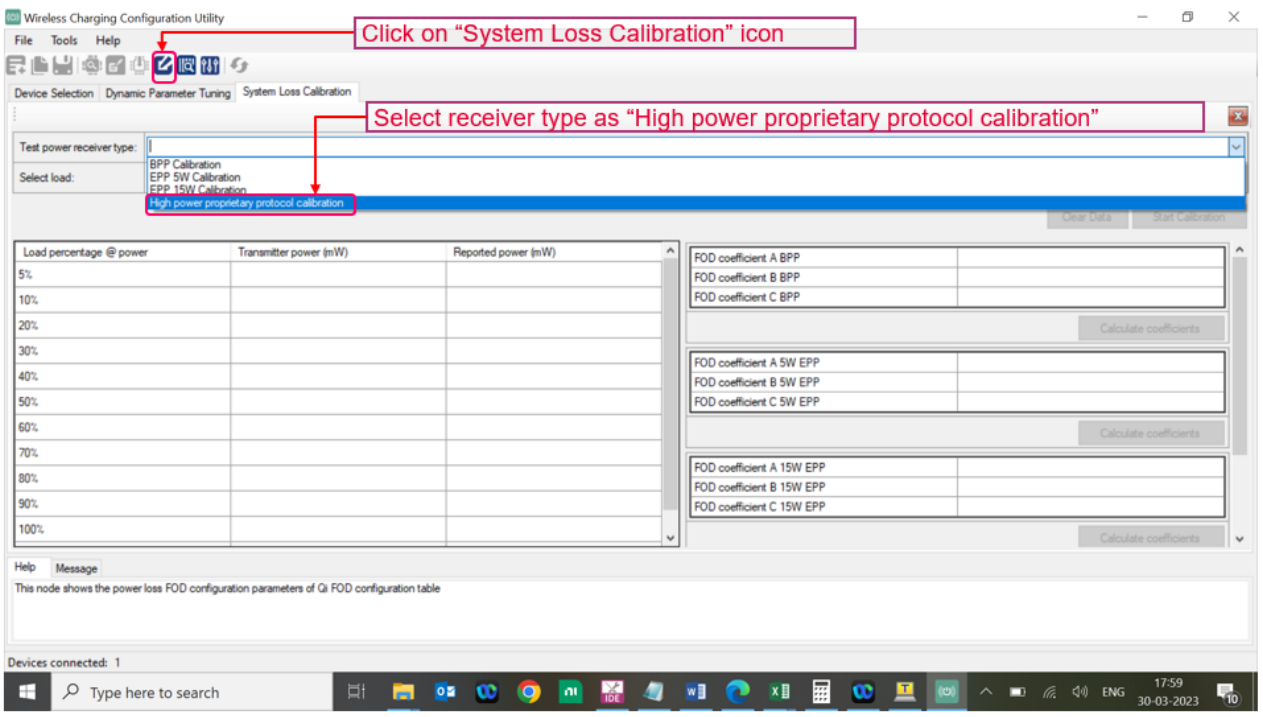

Figure 30 Selecting power loss calibration

10. Select load (%) from the drop-down menu list (2% to 102%) under “Select load”. Load the receiver by electronic load with the same % of load of 50W (that is, 2% of 50W is equal to 1W). After 10sec, when the load stabilizes, click on “Start Calibration” on the top right corner.
A power loss calibration table publishes the transmitter power and receiver power after calibration against each load. Therefore, ensure that the same is published before moving to the next load (%) (see **Figure 31**).

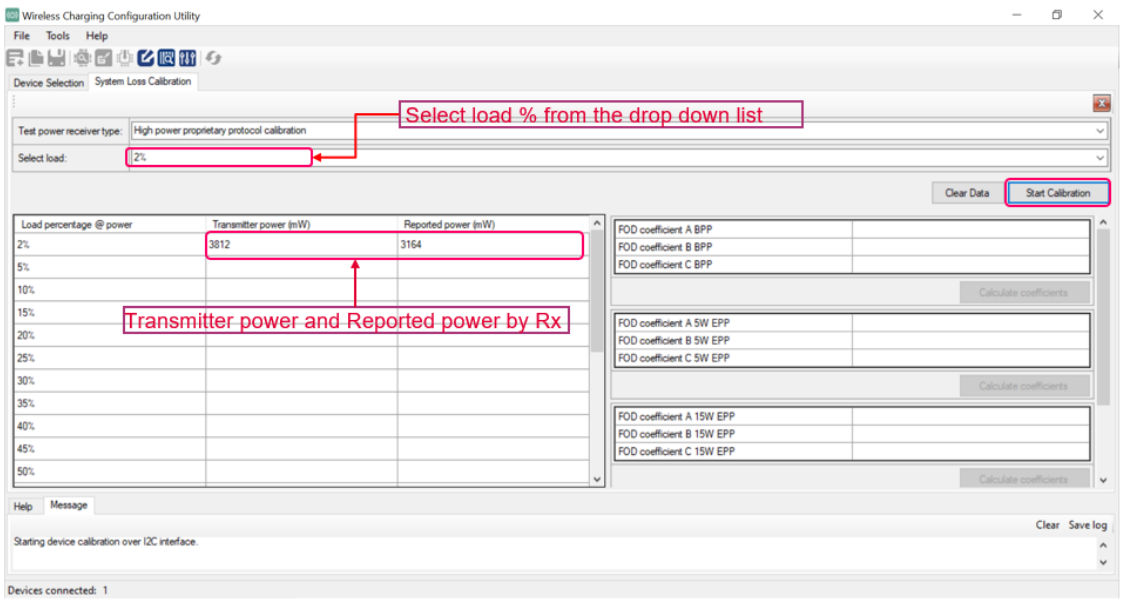

Figure 31 Starting the power loss calibration

11. Repeat step 10 till 102% of the load is reached (refer to **Figure 32**).

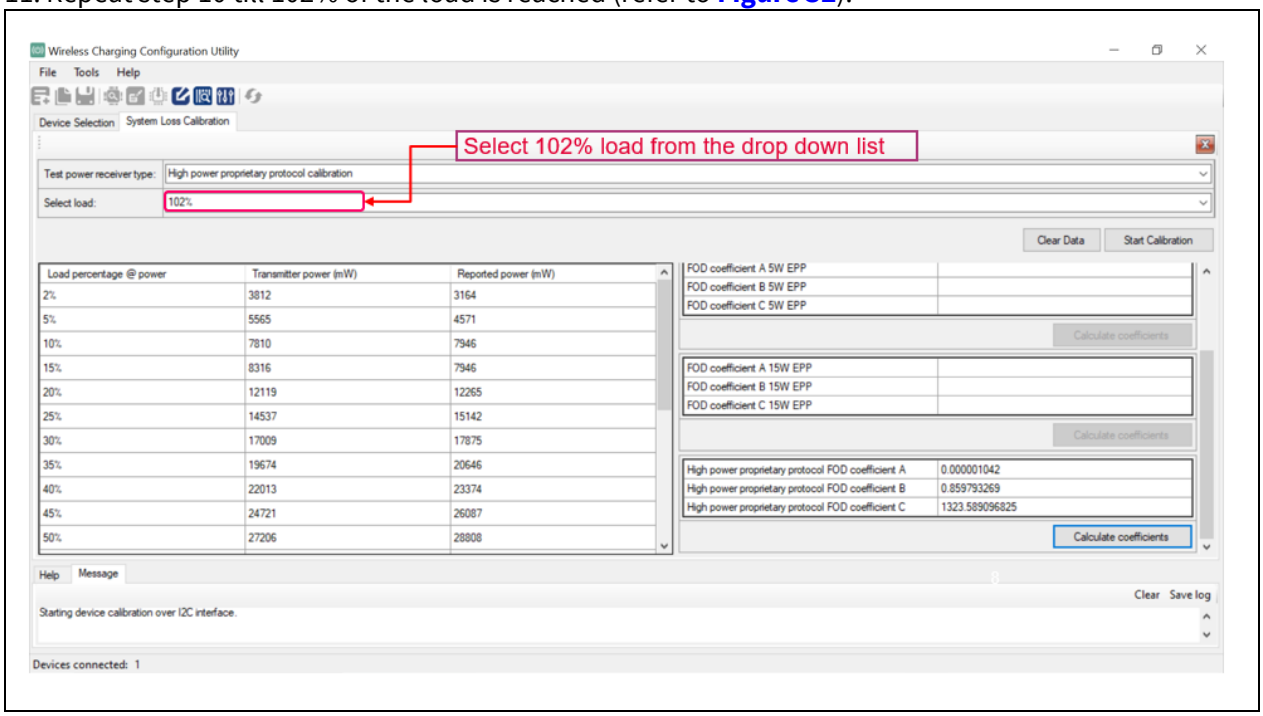

Figure 32 Specifying power loss calibration values

12. Click on “Calculate coefficients” tab. Coefficient A, B, and C are published in the screen. Copy the same in your local file in a notepad (refer to **Figure 33**) .

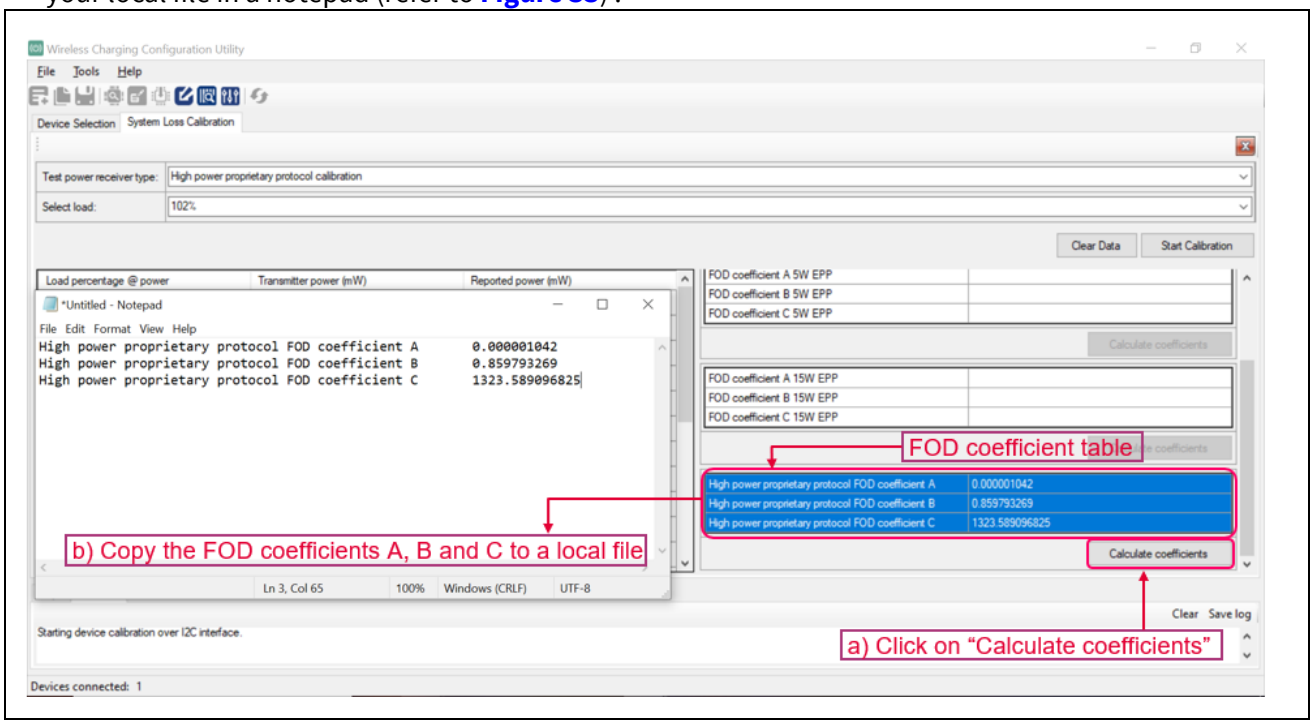

Figure 33 Calculating power loss co-efficient values

13. Close the System loss calibration window and click on the “Read from device” icon, select “FOD Power Loss”, and enable the FOD (refer to **Figure 34**).

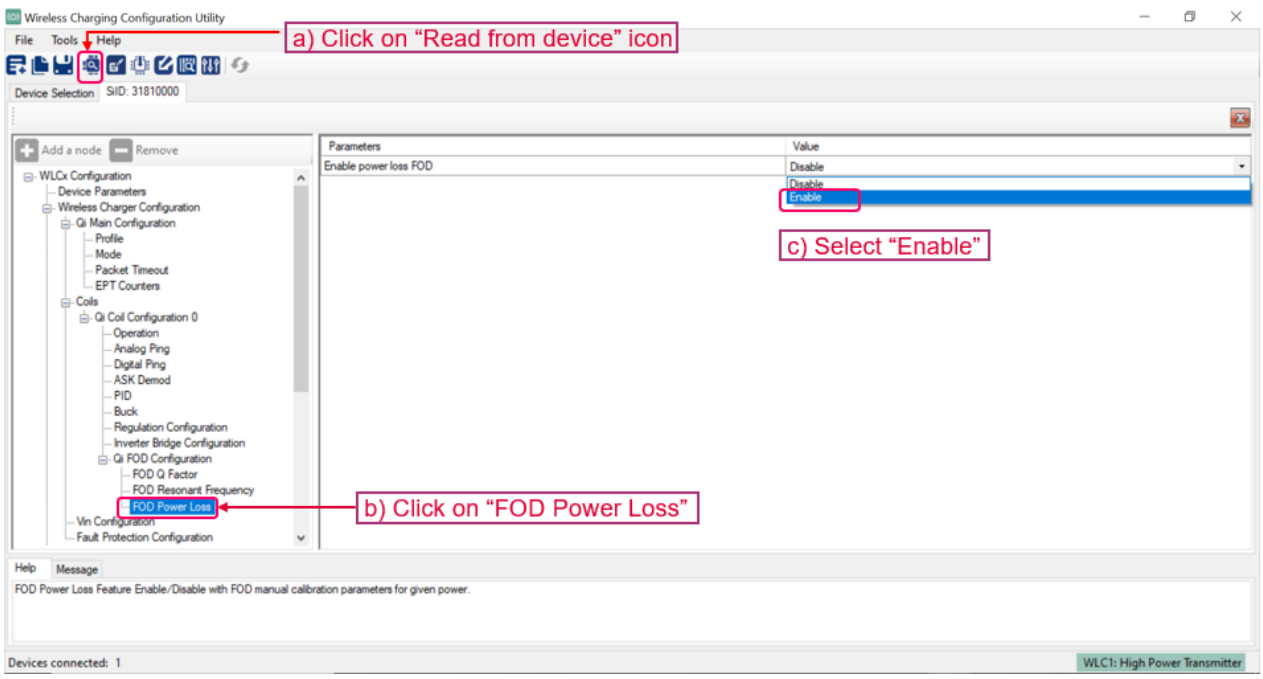

Figure 34 Selecting FOD power loss calibration

14. Change the FOD coefficients a, b, and c with new calibrated coefficients (refer to **Figure 35**)

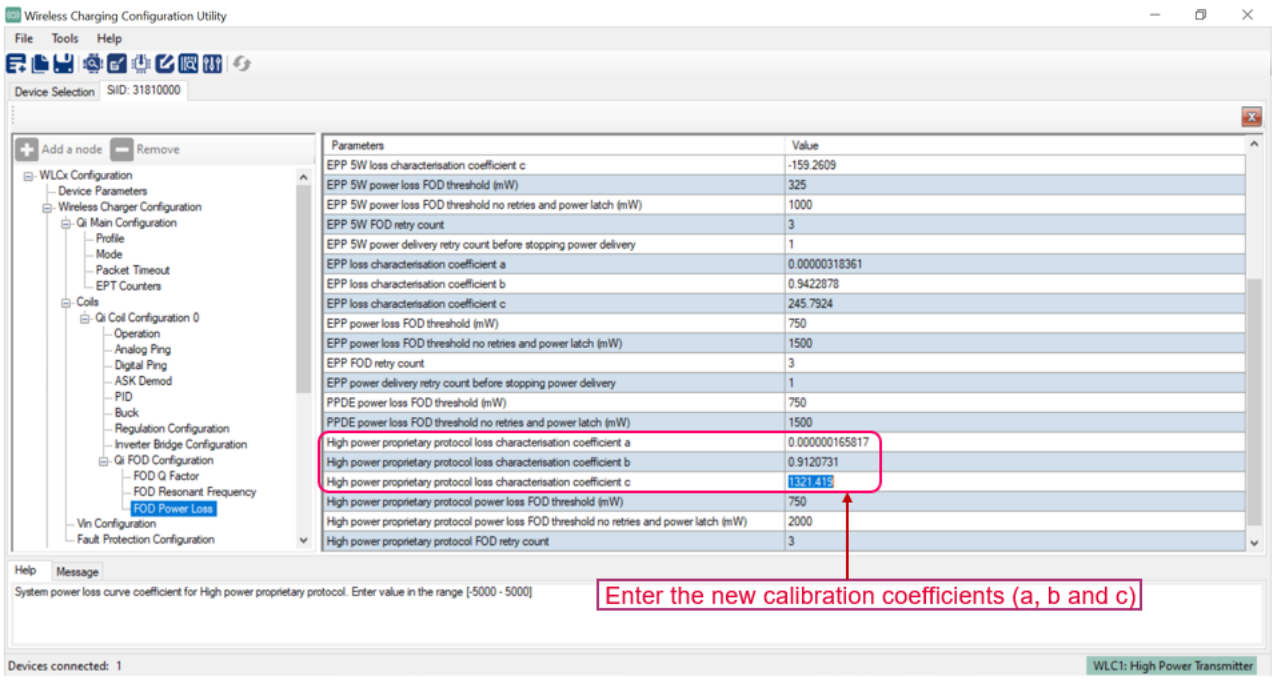

Figure 35 Specifying new power loss calibration coefficients

15. Go to the “File” tab and select the “Save to firmware file” option (refer to **Figure 36**).
This allows the user to save the file in either “.CYACD2” or “.hex”* extension format. Select the “.CYACD2” extension and save the file.
Note: The I2C-based connection does not support the “.hex” extension file. If you save the file in the .hex format, it can be programmed by using MiniProg4.

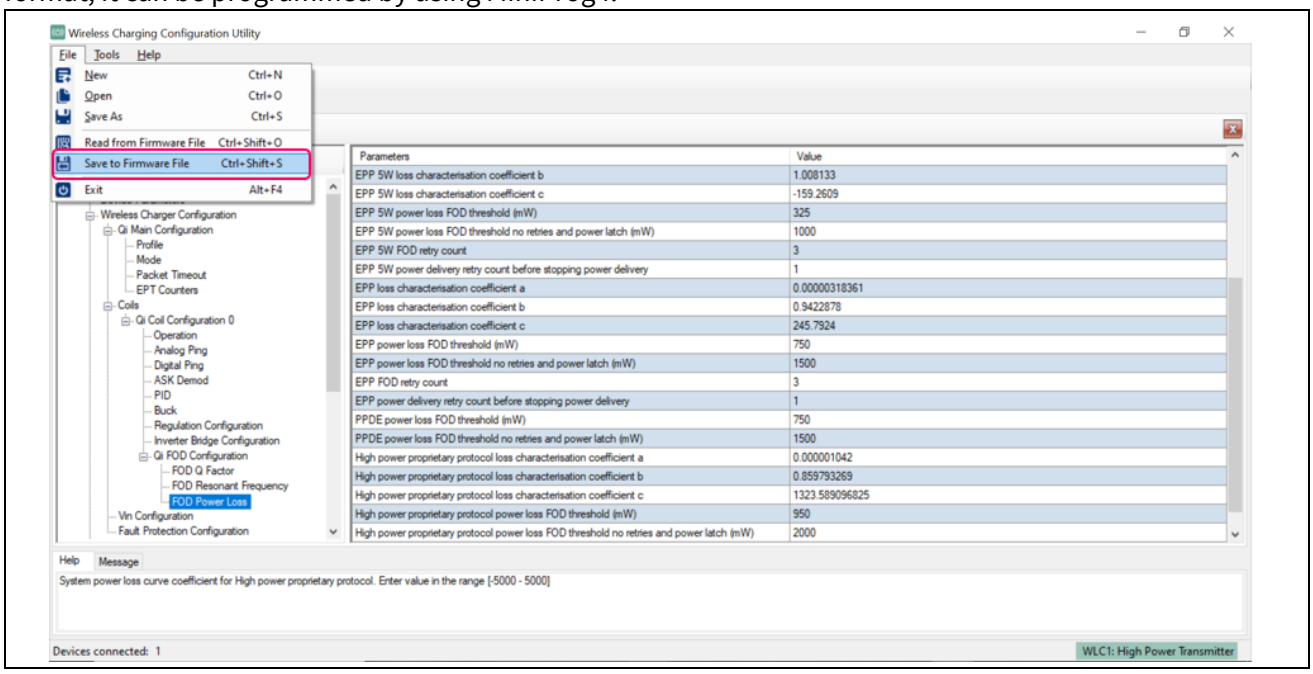

Figure 36 Saving the firmware with new calibration coefficients

16. Click on the “Firmware update” icon and program the updated file (.CYACD2) (refer to **Figure 37**). Wait for the “Flash uploaded successfully” pop-up window.

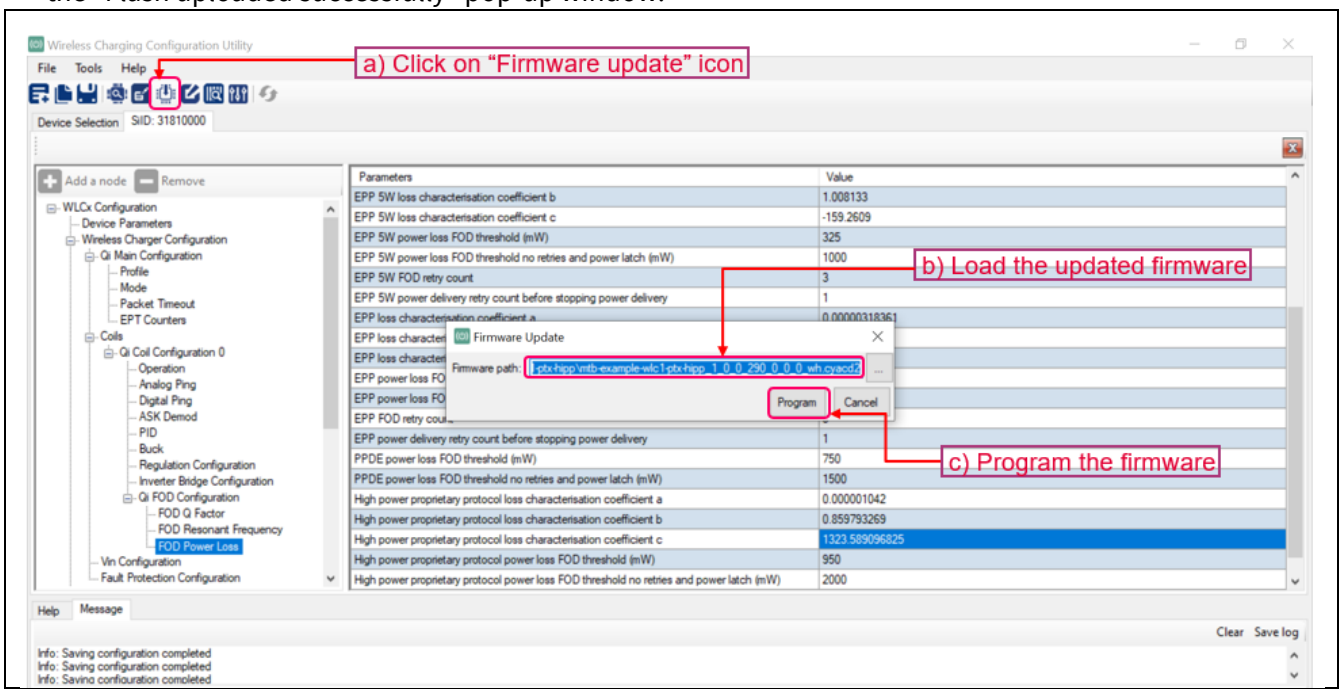

Figure 37 Programming the firmware with updated calibration coefficients

This completes the calibration procedure for power loss FOD on the REF_WLC_TX50W_N1 board.

References

[1] **Evaluation board REF_WLC_TX50W_N1**

Revision history

Document revision	Date	Description of changes
**	2022-09-26	New user guide.
*A	2022-09-30	Added Qi specification for the distance between the coil top surface to interface surface in section 3.1
*B	2023-02-06	Revised to Rev 4.
*C	2023-04-19	Added power loss calibration procedure in Appendix B.

Trademarks
All referenced product or service names and trademarks are the property of their respective owners.

Edition 2023-04-19

Published by

Infineon Technologies AG

81726 Munich, Germany

© 2023 Infineon Technologies AG.
All Rights Reserved.

Do you have a question about this document?

Email: erratum@infineon.com

Document reference

002-36393 Rev. *C

Important notice
The information given in this document shall in no event be regarded as a guarantee of conditions or characteristics ("Beschaffenheitsgarantie")

With respect to any examples, hints or any typical values stated herein and/or any information regarding the application of the product, Infineon Technologies hereby disclaims any and all warranties and liabilities of any kind, including without limitation warranties of non-infringement of intellectual property rights of any third party.

In addition, any information given in this document is subject to customer's compliance with its obligations stated in this document and any applicable legal requirements, norms and standards concerning customer's products and any use of the product of Infineon Technologies in customer's applications.

The data contained in this document is exclusively intended for technically trained staff. It is the responsibility of customer's technical departments to evaluate the suitability of the product for the intended application and the completeness of the product information given in this document with respect to such application.

Warnings
Due to technical requirements products may contain dangerous substances. For information on the types in question please contact your nearest Infineon Technologies office.

Except as otherwise explicitly approved by Infineon Technologies in a written document signed by authorized representatives of Infineon Technologies, Infineon Technologies' products may not be used in any applications where a failure of the product or any consequences of the use thereof can reasonably be expected to result in personal injury.