Radar Baseboard MCU4

XENSIV™ radar system platform

Board version V2.0

About this document

Scope and purpose

This user guide describes the Radar Baseboard MCU4 (DEMO RADAR MCU4), part of Infineon's XENSIV™ 24 GHz radar system platform. It also introduces the concept of the platform, which supports multiple sensors. At the heart of the board is the XMC4700, a 32-bit Arm® Cortex®-M4 MCU. It also has a high-speed USB 2.0 interface to host a computer for visualization or fast data processing. In addition, the board is compatible with the Arduino standard, which facilitates access to existing mass-market daughter boards for mass data storage or wireless communication Arduino boards.

Intended audience

The intended audience for this document are design engineers, technicians, and developers of electronic systems, working with Infineon's XENSIV™ 24 GHz radar sensors.

Table of contents

About this document **1**
Table of contents **2**
1 Introduction **3**
1.1 Overview 3
1.2 Key features 3
2 Hardware description **4**
2.1 Overview 4
2.2 Block diagram 5
2.3 Power supply 6
2.3.1 Battery and external power supply 6
2.3.2 USB operation 8
2.4 Current measurement of radar sensor shield 9
2.5 EEPROM 10
2.6 Microcontroller unit – XMC4700 10
2.7 User-configurable LEDs 11
2.8 User-configurable button 12
2.9 SD card reader 12
2.10 Level shifters 12
3 Connectors **14**
4 Firmware **17**
4.1 Overview 17
4.2 Firmware development and debugging 17
References **19**
Revision history **20**
Disclaimer **21**

1 Introduction

1.1 Overview

The Radar Baseboard MCU4 is a generic sensor interface for Infineon's 24 GHz radar sensors. The central MCU can perform radar data processing or forward the sensor data to a USB interface or an Arduino interface. The board is designed to allow customers to do prototyping and system integrations as well as initial product feature evaluations.

An onboard debugger with licensed firmware from SEGGER, it also allows easy debugging over USB. Infineon's powerful, free-of-charge toolchain DAVE™ can be used for programming the XMC4700 microcontroller. This user guide describes the key features and hardware configuration of the Radar Baseboard MCU4 in detail.

1.2 Key features

The primary features of the Radar Baseboard MCU4 are:

- XMC4700 – 32-bit Arm® Cortex®-M4 based microcontroller for signal processing
- Multiple power supply possibilities – micro-USB, external power supply or battery
- Compatible with Arduino for ease of use and prototyping
- Current sensors for current consumption estimation
- Onboard debugger for debugging
- SD card reader for raw data storage
- User-configurable LEDs
- User-configurable button

2 Hardware description

This section presents a detailed overview of the Radar Baseboard MCU4 hardware specifications, including features, power supply and board interfaces.

2.1 Overview

The Radar Baseboard MCU4 is shown in Figure 1. The board makes it possible to implement different settings to get closer to a custom-fit solution for the use case. It also makes it possible to quickly gather sampled radar data that can be used to develop radar signal-processing algorithms on a PC or implement target detection algorithms directly on the microcontroller using DAVE™.

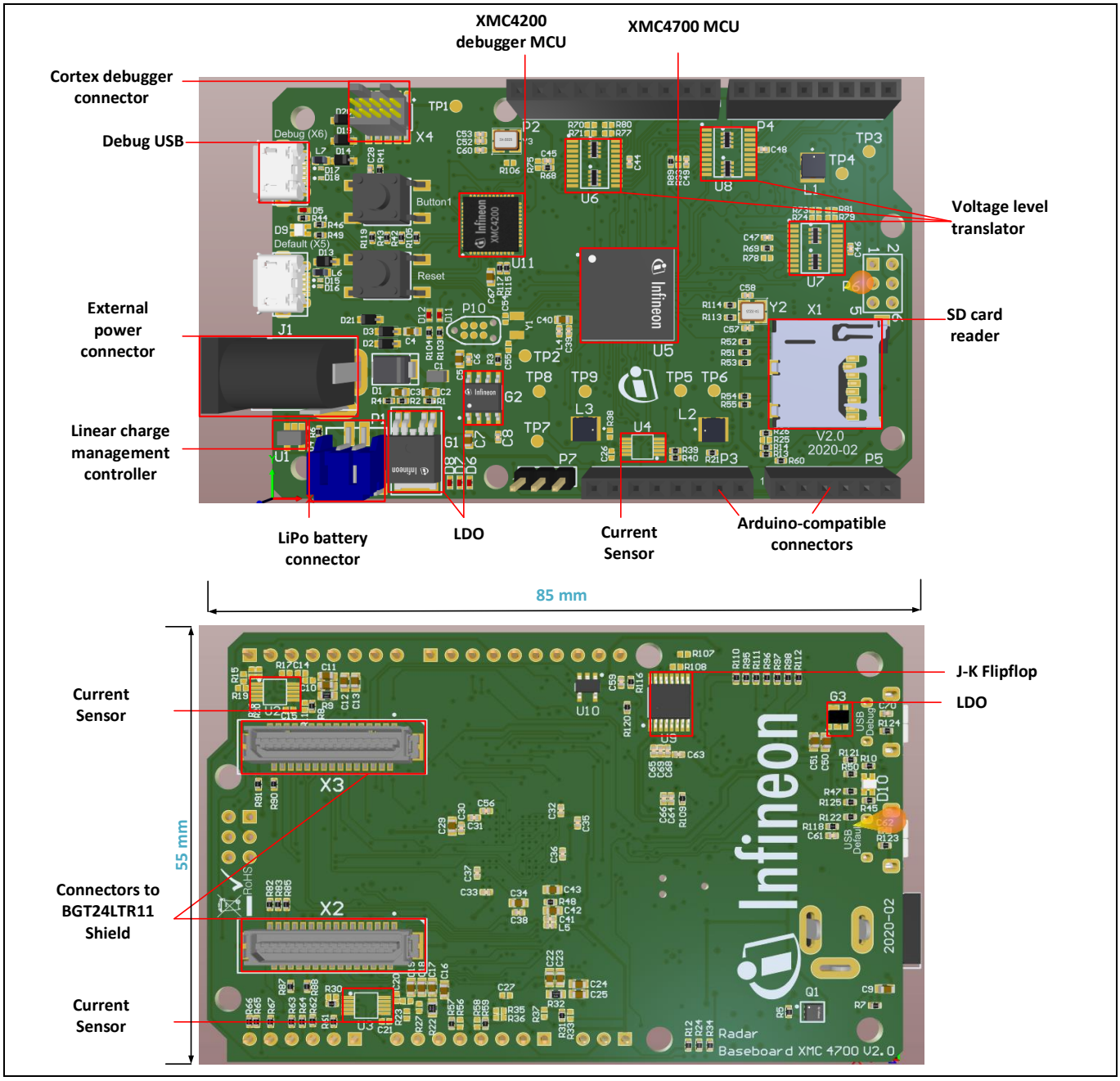

Figure 1 Radar Baseboard MCU4 with main component and dimensions

2.2 Block diagram

Figure 2 shows the block diagram of the Radar Baseboard MCU4. It features Infineon's XCM4700, 32-bit Arm® Cortex®-M4 based microcontroller for signal processing. It has two connectors to interface with the RF shield. The board also has several debugging possibilities such as Tag connect, cortex connector and also an onboard debugger. For user flexibility, it has three configurable LEDs that can be used for status indication and also a configurable button. An SD card reader is also available for data storage.

The board is powered via the micro-USB cables. It is also possible to power it via external 7 V power supply or with a battery. A series of low-noise voltage regulators is used to provide a regulated power supply to the different building blocks of the board and the connected shield. There are three current sensors on the board for measuring current consumption of the connected shield or Arduino.

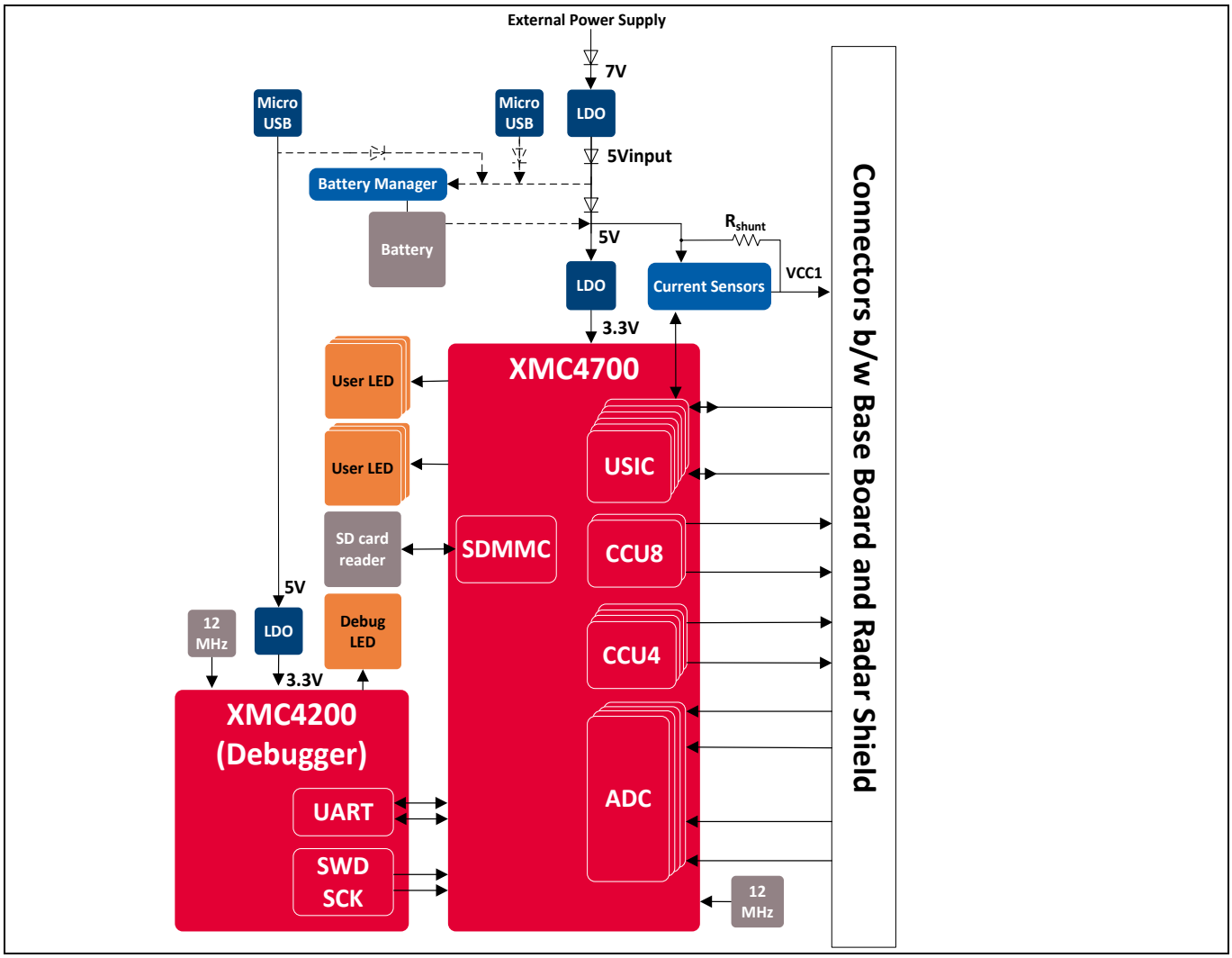

Figure 2 Radar Baseboard MCU4 block diagram

2.3 Power supply

The Radar Baseboard MCU4 is powered via external 7 V power, battery or two micro-USB cables. Figure 3 shows the power supply concept used in the system.

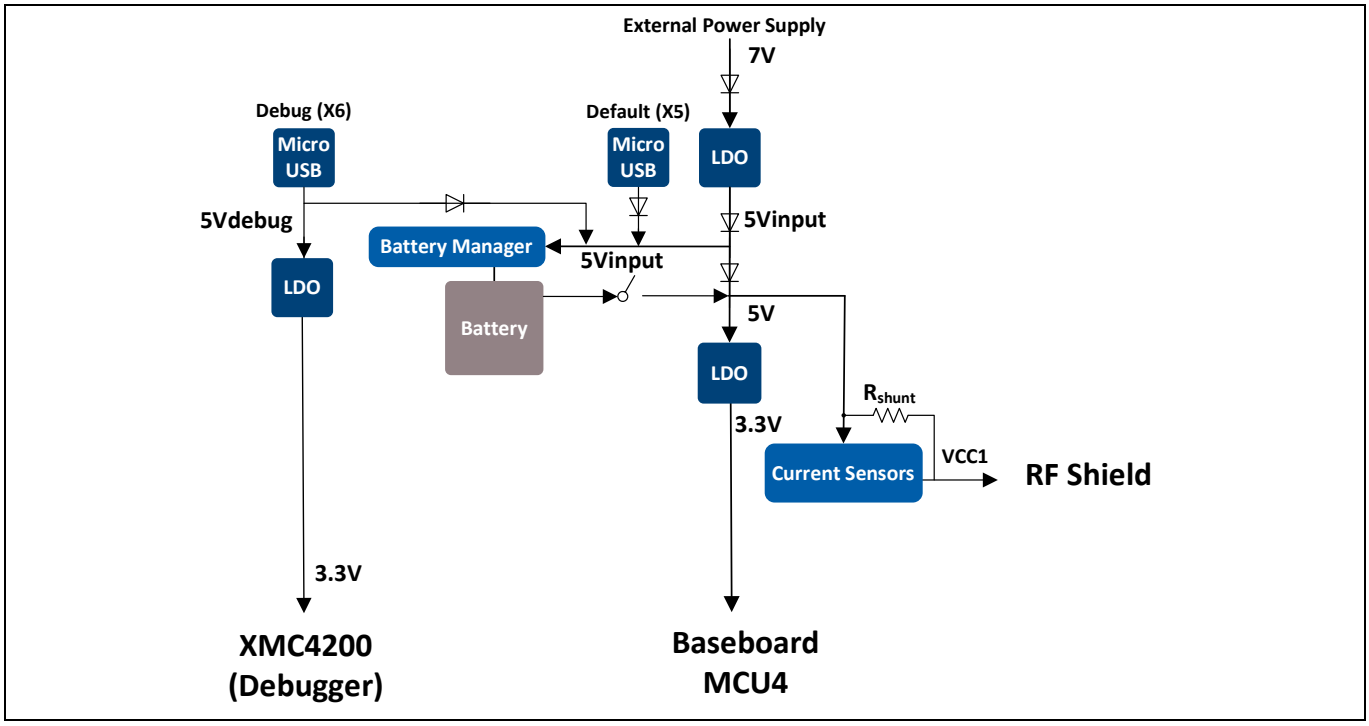

Figure 3 Power supply concept block diagram

2.3.1 Battery and external power supply

The Radar Baseboard MCU4 allows the user to use an external 7 V power supply for operation or to charge the battery. The block diagram of the circuitry is shown in Figure 5 and Figure 6. When the baseboard is connected to an external power supply (7 V), the LDO (G1) has an input voltage and creates a stable 5 V voltage (5 Vinput). This 5 V (5 Vinput) is then used by the battery manager (U1) to charge the battery. LED (D2) indicates the charging status. The same 5 V (5 Vinput) is also used as an input to the second LDO (G2), which in turn generates the stable 3.3 V to power the board components. The PMOS switch (Q1) remains off as the gate voltage is high, hence keeping the battery output disconnected.

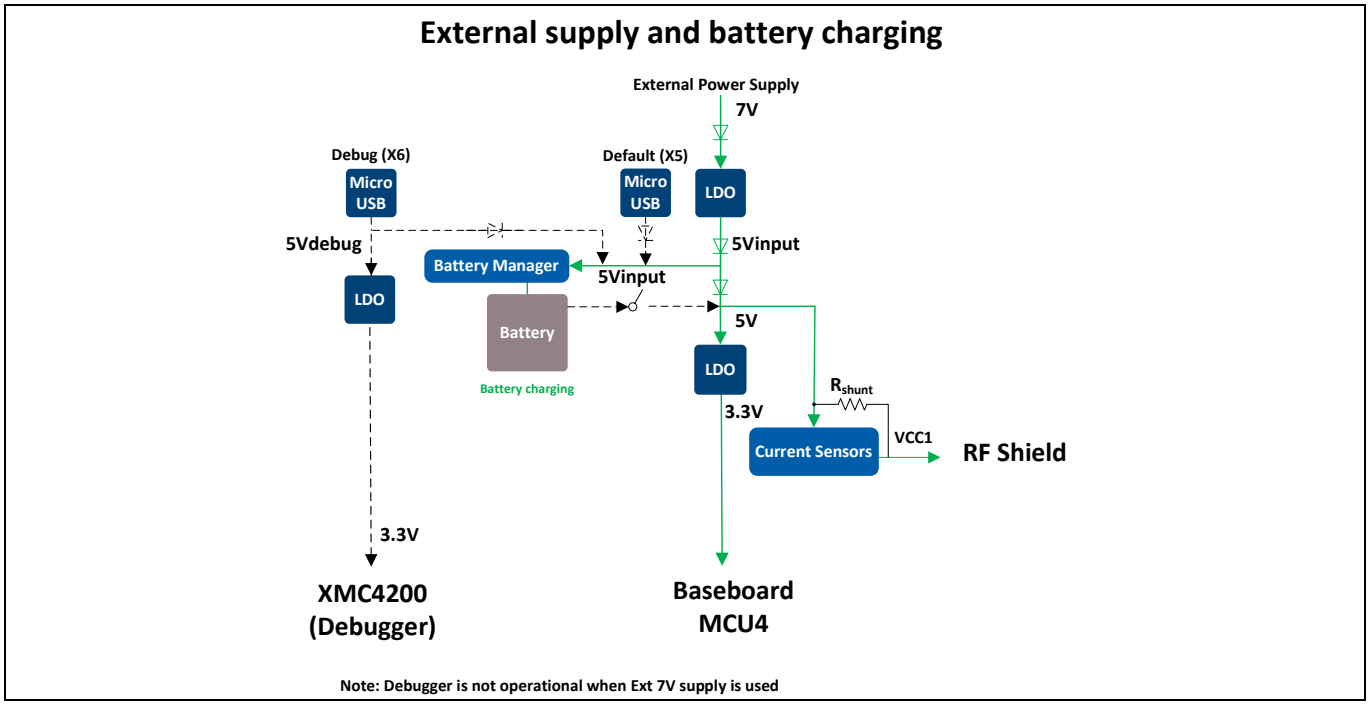

Figure 4 External power supply and battery charging block diagram

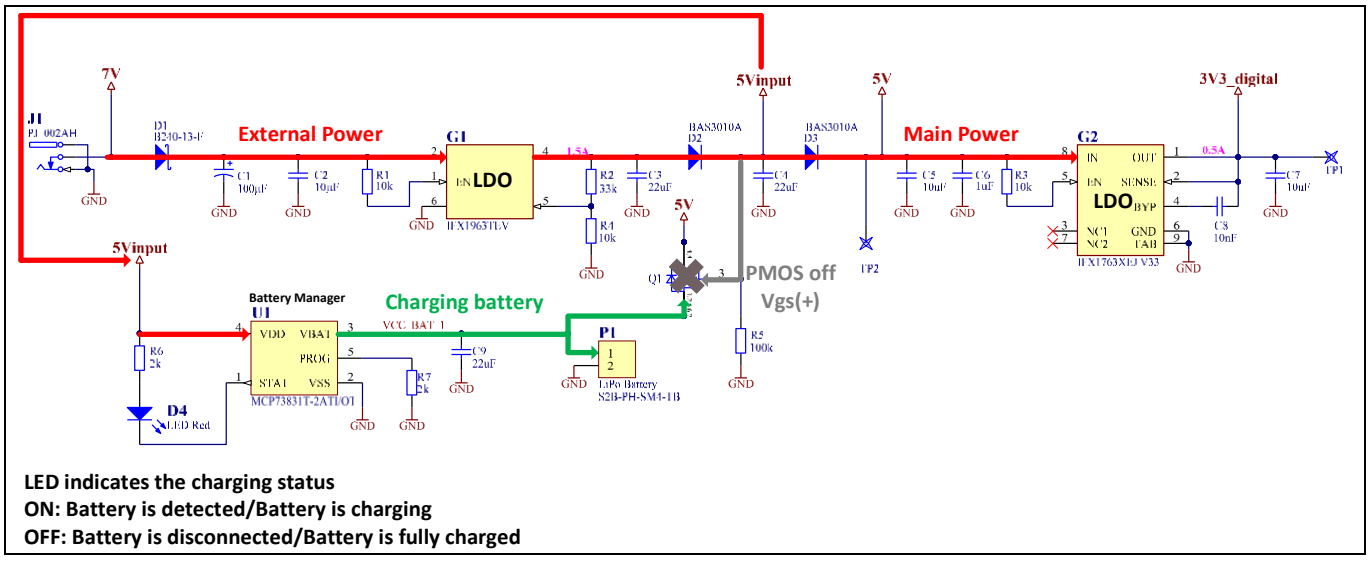

Figure 5 External power supply and battery charging schematic

The operation of the baseboard using the battery is shown in Figure 6. When the baseboard is not connected to an external power supply, the LDO (G1) has no input voltage and remains disabled. Consequently, the battery manager (U1) has no input voltage and does not charge the battery. The gate voltage of the PMOS switch (Q1) is low. The switch is then closed, creating a connection between the battery and the input of the second LDO (G2). The battery supplies 4.2 V as an input to the LDO (G2) to generate the stable 3.3 V.

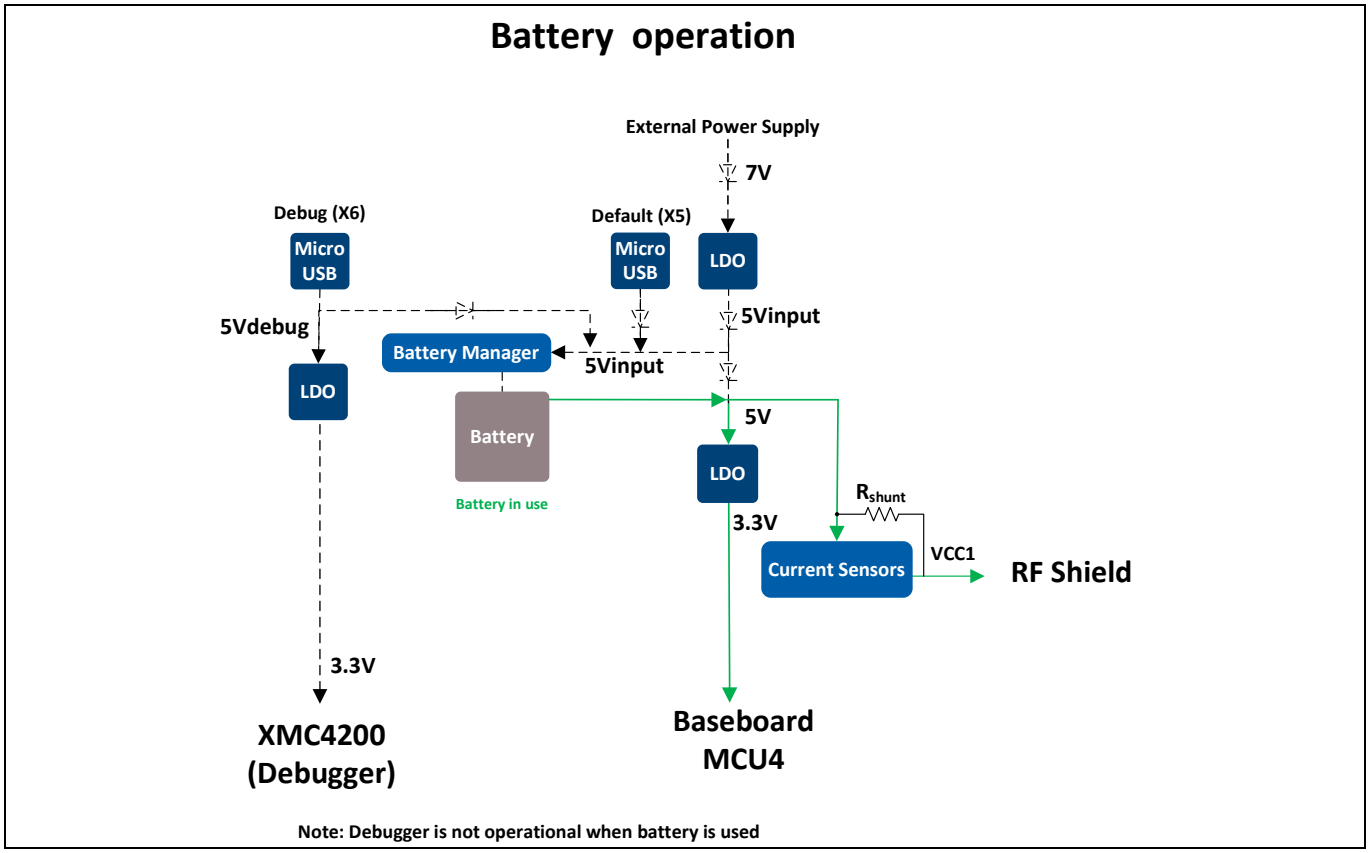

Figure 6 Battery operation block diagram

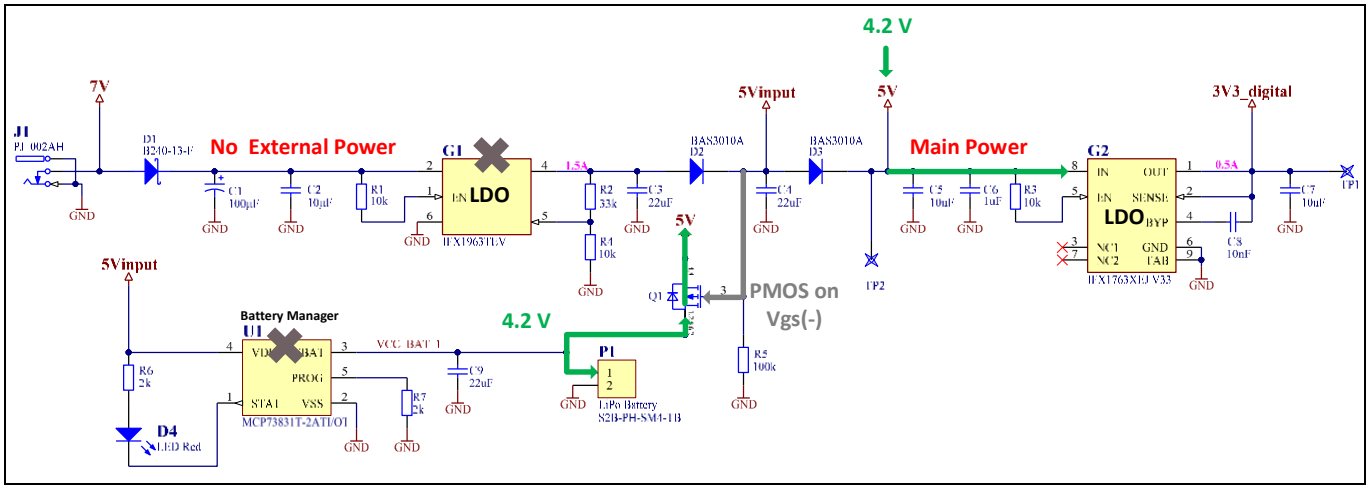

Figure 7 Battery operation schematic

2.3.2 USB operation

The Radar Baseboard MCU4 can also be powered through two USB cables, as shown in Figure 8. It is also possible to use a single USB cable for operation. However, single USB operation depends on the overall power consumption of the baseboard and the radar shield attached to it. The battery manager is connected to the battery and, depending on the current supplied by the USBs, charges the battery.

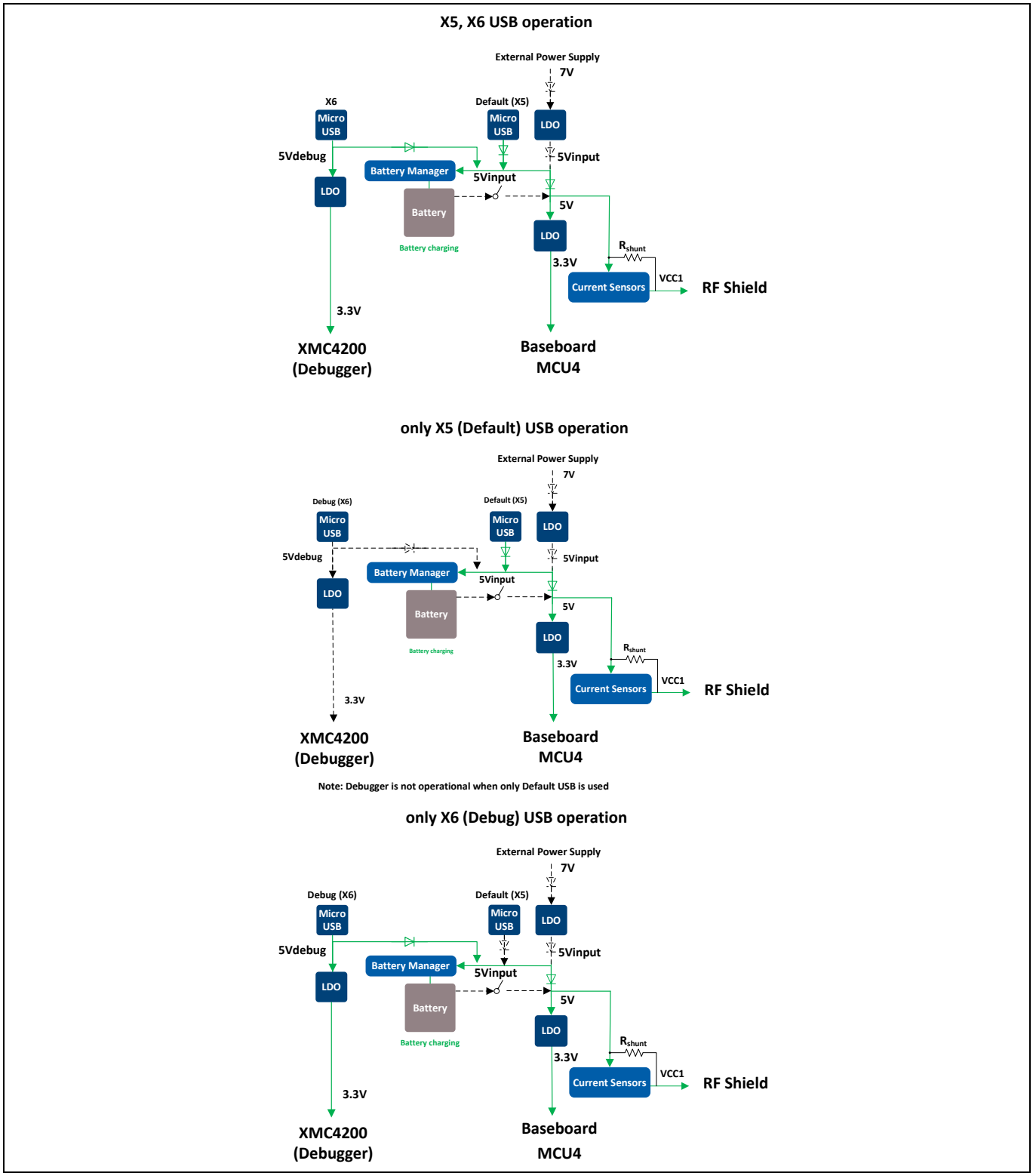

Figure 8 Operation with USB cables

2.4 Current measurement of radar sensor shield

The Radar GUI provides an estimate of the expected average power consumption for the configured settings. This is done using the current sensors on the board (U2, U3 and U4). If a measurement of the actual operating current consumption of the sensor is required, shunt resistors are provided on the Radar Baseboard MCU4. The

shunt resistors (R9, R22 and R32) are in series to the supplies of the radar shield, as illustrated in Figure 9. By measuring the voltage drop along the respective shunt resistor, the user can infer the current supplied to the radar shield and multiply it by the voltage supplied to measure the power consumption. In this way, it is possible to measure the power supplied on the 3.3 V and the 5 V supply of the connected radar shield or the Arduino board.

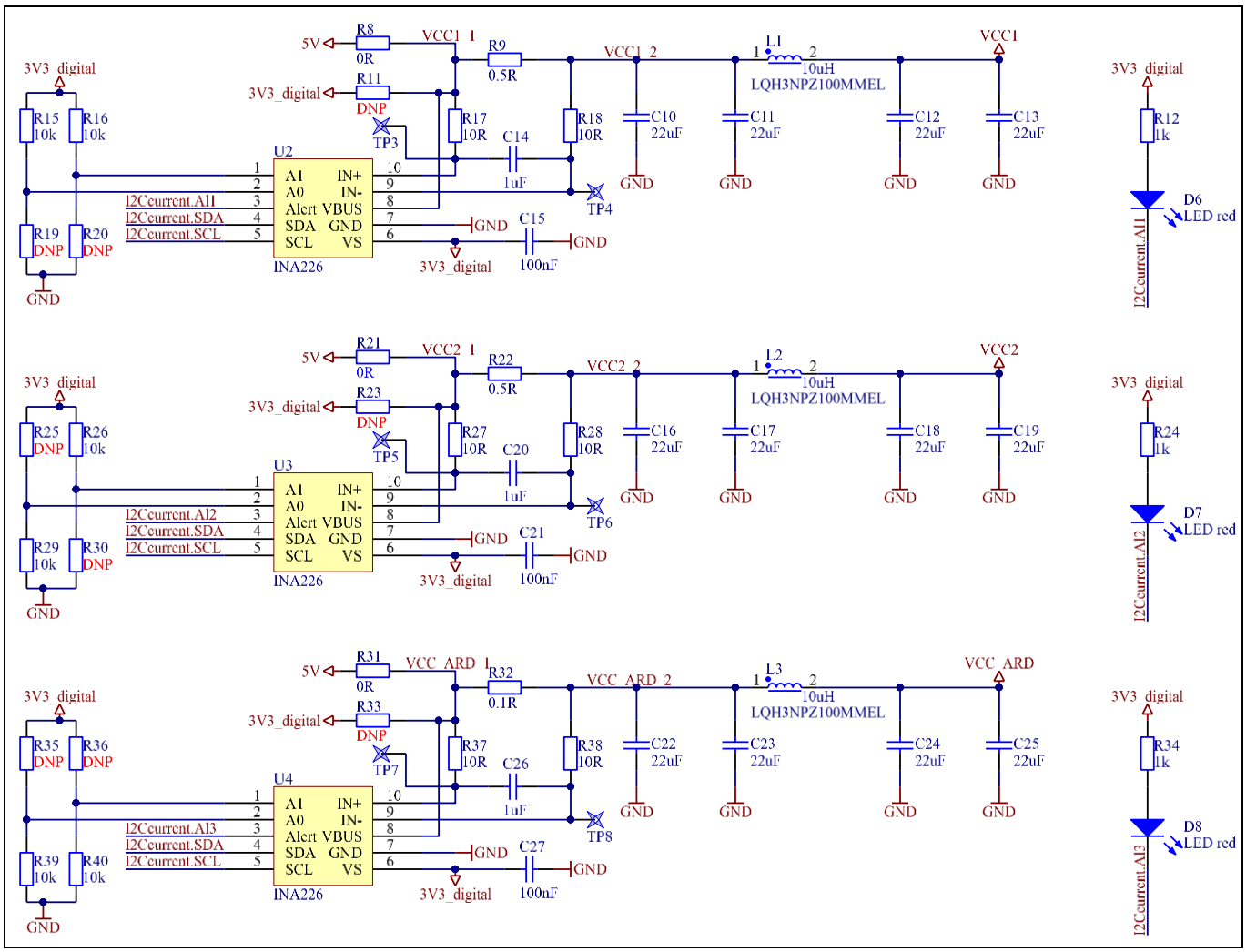

Figure 9 Current sensors connections

2.5 EEPROM

When the board boots up or when a sensor is plugged into the sensor connectors, the sensor supply is deactivated. During start-up, only the 3V3_digital (MCU) supply of the EEPROM on the radar shield is active. The MCU detects if a radar shield is plugged into the connectors. If the radar shield is plugged in correctly, the MCU will read the information in the EEPROM. This is how it will get information about what kind of shield is plugged into the interface. The power supply of the radar shield is only enabled if a correct shield is detected.

2.6 Microcontroller unit – XMC4700

The Radar Baseboard MCU4 uses an XMC4700 32-bit Arm® Cortex®-M4 MCU to perform the radar signal processing. The XMC4700 takes care of communication with all the sub-systems on the radar module, enables data acquisition, performs the complete radar signal processing (including sampling and FFT) and communicates the results via its UART or USB interface to an external device.

An XMC4700 in a 194-pin BGA package is used, featuring a 144 MHz CPU frequency, 2048 kB Flash and 352 kB RAM. Four 12-bit ADCs help to implement the radar signal sampling and also acquire the various sensor data from the BGT24LTR11 MMIC. The MCU also has a USB 2.0 device interface, which enables direct communication with a PC. Figure 10 shows a system block diagram of the XMC4000 series MCUs.

Please refer to the XMC4700/XMC4800 datasheet [1] for detailed information on the microcontroller.

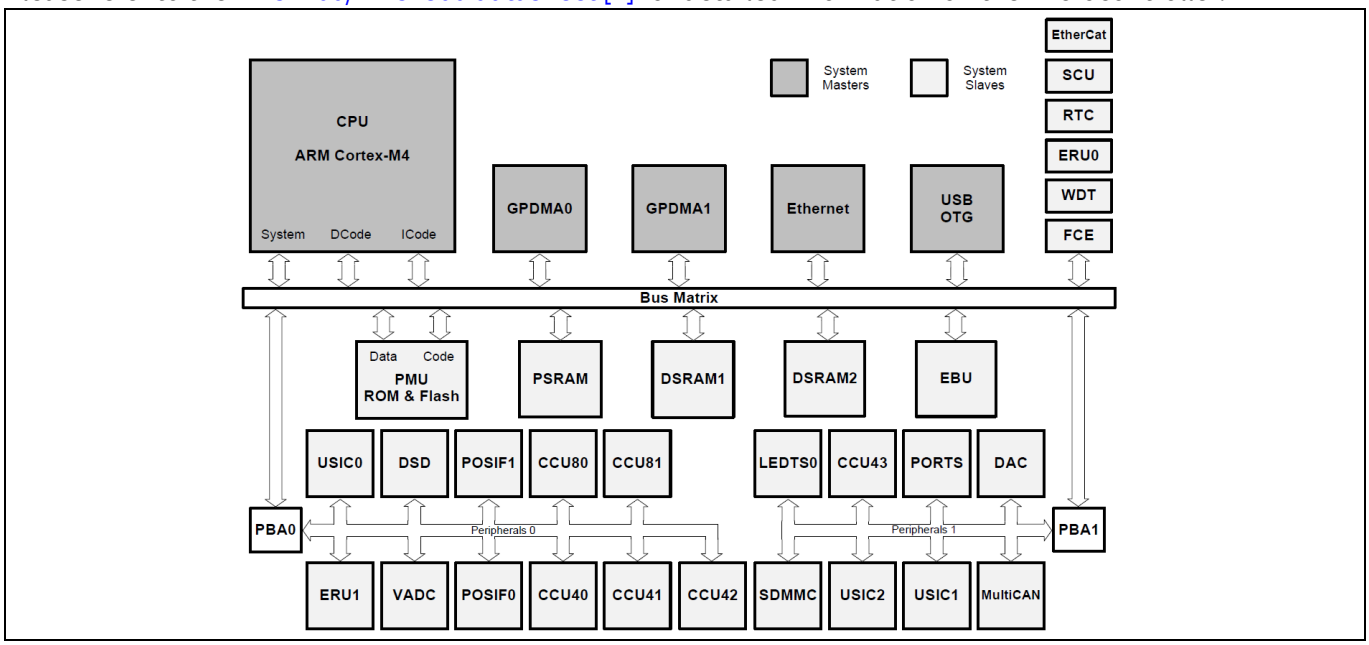

Figure 10 XMC4700 block diagram

2.7 User-configurable LEDs

Some pins of the XMC47000 on the baseboard are connected to external LEDs on the top and bottom of the PCB for status indication. Table 1 lists the user-configurable LEDs pin assignment. There is a set of three LEDs on each side of the PCB.

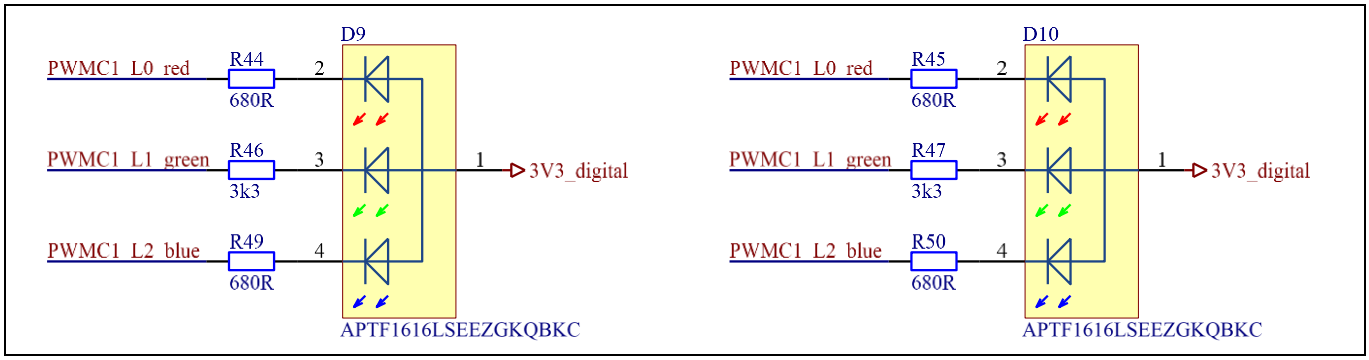

Figure 11 User-configurable LEDs

Table 1 User-configurable LEDs pin assignment

LED	MCU port pin
D9, D10 (red LED)	P1.15
D9, D10 (green LED)	P1.14
D9, D10 (blue LED)	P1.13

2.8 User-configurable button

The baseboard has a user-configurable button, S1, for additional functionality and flexibility for the user. It is interfaced with XMC4700 MCU at the P8.8 pin.

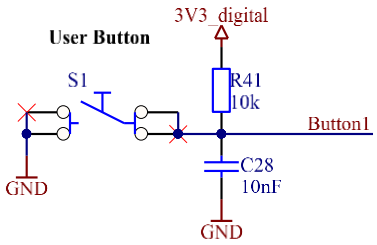

Figure 12 User-configurable button

2.9 SD card reader

The baseboard also has a SD card reader connected to the XMC4700's SDMMC block. This SD card reader can be used to collect and store raw data.

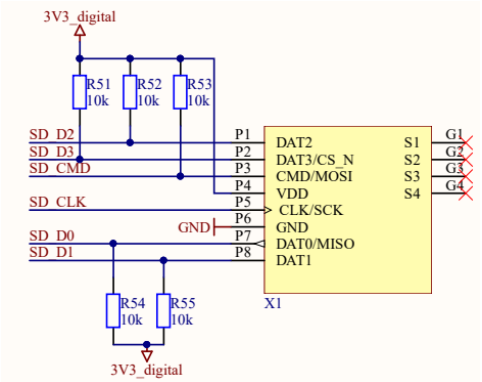

Figure 13 SD card reader connections

2.10 Level shifters

The baseboard has three level shifters (U6, U7 and U8), as shown in Figure 14, for translating logic voltage levels.

Port A tracks VCCA (3V3_digital) and port B tracks VCCB (configurable using the P7 header to 3.3 V or 5 V). These level translations are important for Arduino operation. When the Output Enable (OE) input is low, all outputs are placed in the high-impedance state.

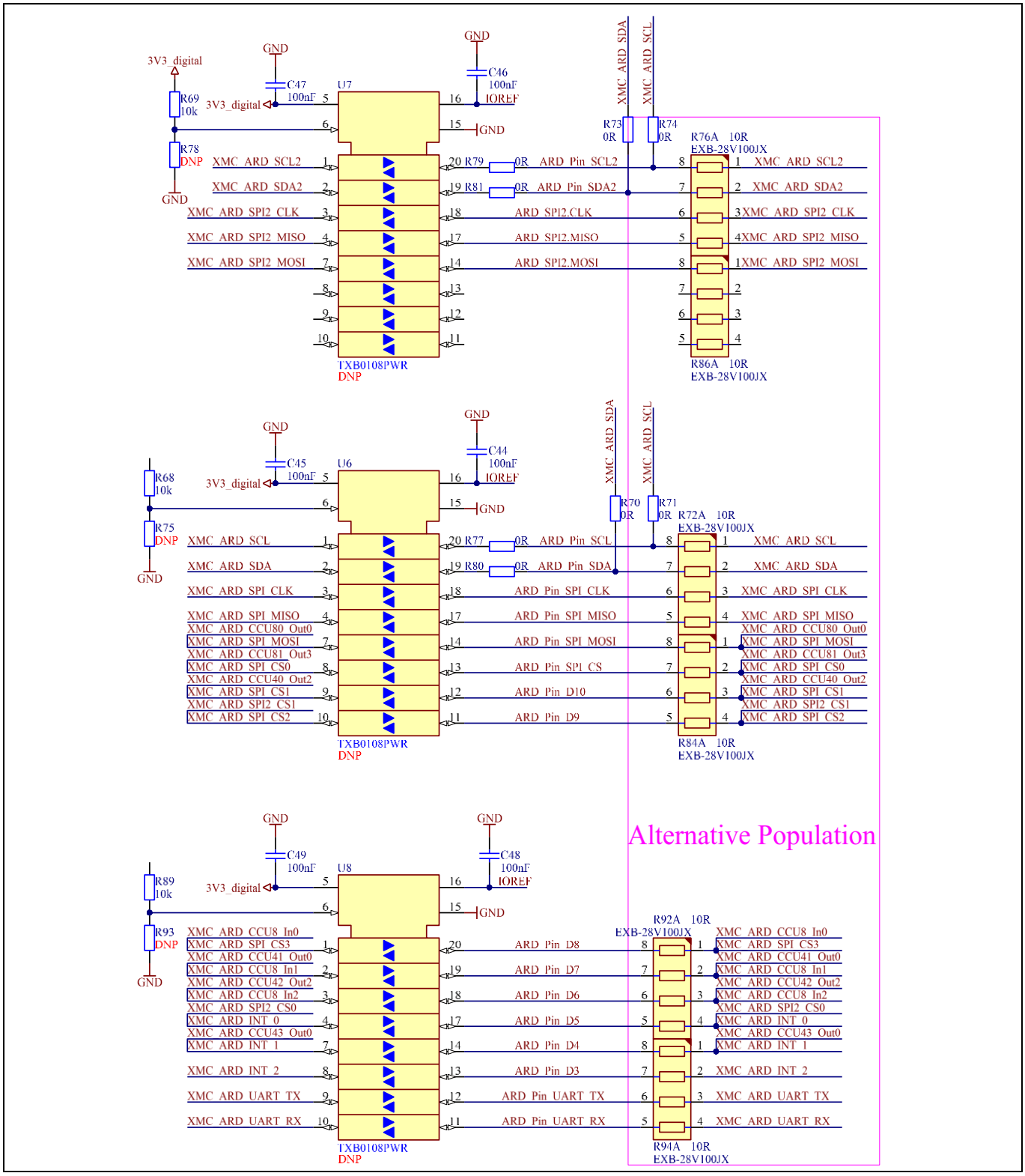

Figure 14 Level translator (U6, U7, and U8) connections

3 Connectors

Figure 15 shows the pin headers on the Radar Baseboard MCU4, and Table 2, Table 3, Table 4, Table 5, and Table 6 describe the pins.

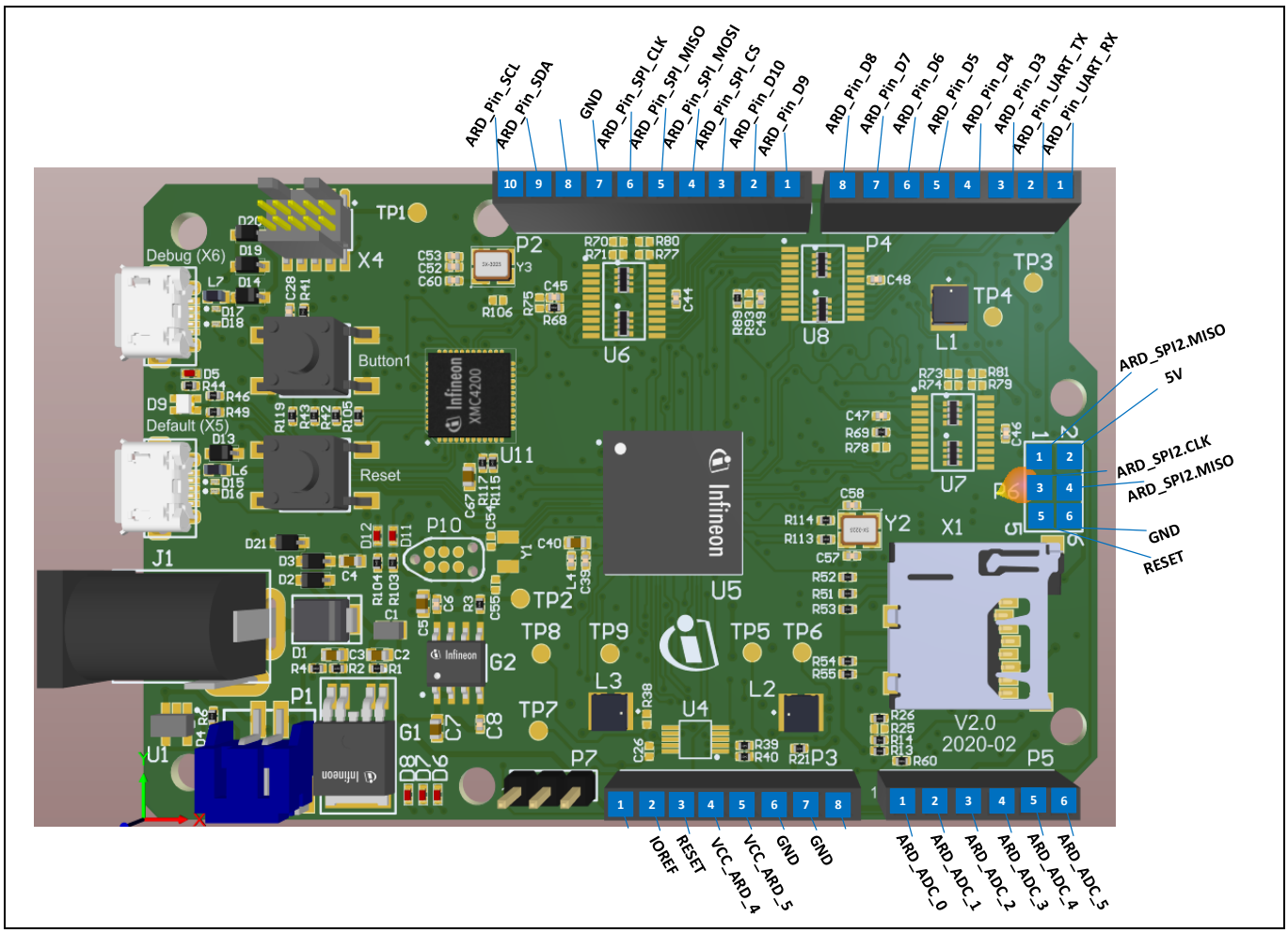

Figure 15 External headers (P2, P4, P5, and P6)

Table 2 External header (P2) – pin description

Pin no.	Signal name	Pin description
1	ARD_Pin_D9	General-purpose IO
2	ARD_Pin_D10	PWM output
3	ARD_Pin_SPI_CS	SPI slave select (default)/PWM output
4	ARD_Pin_SPI_MOSI	SPI master out slave in (default)/PWM output
5	ARD_Pin_SPI_MISO	SPI master in slave out
6	ARD_Pin_SPI_CLK	SPI clock
7	GND	Ground
9	ARD_Pin_SDA	I2C data/Arduino ADC channel CH4
10	ARD_Pin_SCL	I2C clock/Arduino ADC channel CH5

Table 3 External header (P3) – pin description

Pin no.	Signal name	Pin description
2	IOREF	Voltage reference at which the external board interfacing with the Radar Baseboard MCU4 is operating. Can be selected via P7.
3	RESET	Resets the Radar Baseboard MCU4
4	VCC_ARD_4	3.3 V
5	VCC_ARD_5	5 V
6	GND	Ground
7	GND	Ground

Table 4 External header (P4) – pin description

Pin no.	Signal name	Pin description
1	ARD_Pin_UART_RX	XMC4700 UART receive
2	ARD_Pin_UART_TX	XMC4700 UART transmit
3	ARD_Pin_D3	External interrupt 0
4	ARD_Pin_D4	PWM output (default)/external interrupt 1
5	ARD_Pin_D5	Timer 0
6	ARD_Pin_D6	PWM output (default)/timer 1
7	ARD_Pin_D7	PWM output
8	ARD_Pin_D8	General-purpose IO

Table 5 External header (P5) – pin description

Pin no.	Signal name	Pin description
1	ARD_ADC_0	Arduino ADC channel CH0
2	ARD_ADC_1	Arduino ADC channel CH1
3	ARD_ADC_2	Arduino ADC channel CH2
4	ARD_ADC_3	Arduino ADC channel CH3
5	ARD_ADC_4/DAC.VCoarse	Arduino ADC channel CH4
6	ARD_ADC_5/DAC.VFine	Arduino ADC channel CH5

Table 6 External header (P6) – pin description

Pin no.	Signal name	Pin description
1	ARD_SPI2.MISO	SPI master in slave out
2	5V	5 V supply
3	ARD.SPI2.CLK	SPI clock
4	ARD_SPI2.MOSI	SPI master out slave in
5	RESET	Resets the Radar Baseboard MCU4
6	GND	Ground

Note: *Pin 8 of header P2 is not connected to any signal.*
Pins 1 and 8 of header P3 are not connected to any signal.
Pins on P2 and P4 can primarily be used as general-purpose IOs.

The pin headers significantly enhance the functionality of the module. They enable probing the analog outputs of the sensor module and also probing various other signals provided to the IC. In principle, the accessibility of several pins on the radar MMIC and the IF signals available via the external pin headers enable interfacing the module with an external signal processor.

4 Firmware

4.1 Overview

The Radar Baseboard MCU4 comes with a default firmware that is intended to serve as a bridge between a host (typically a PC) and the Radar shields, which are mounted on the connectors. For this, the firmware implements logic to:

- communicate with the host via USB
- read radar sensor data via SPI
- perform signal processing on the received data from the shield
- provide control signals to the shield for specific tasks (for example, controlling the on/off of the radar MMIC)
- check if a radar shield board is plugged into the connectors
- read and write the EEPROM on the radar shield board (for example, to identify the board)
- control some auxiliary peripherals such as status LEDs on the baseboard.

The firmware is delivered as a project for the DAVE™ toolchain, enabling compiling, flashing and debugging work out of the box by simply pressing the corresponding buttons in DAVE™.

4.2 Firmware development and debugging

The baseboard has several possibilities for debugging:

- Onboard debugger – XMC4200 with debug USB
- Tag connect (P10) – for tag connect debug cables
- Cortex debug connector (X4) – 10-pin connector to enable external debugger to be connected

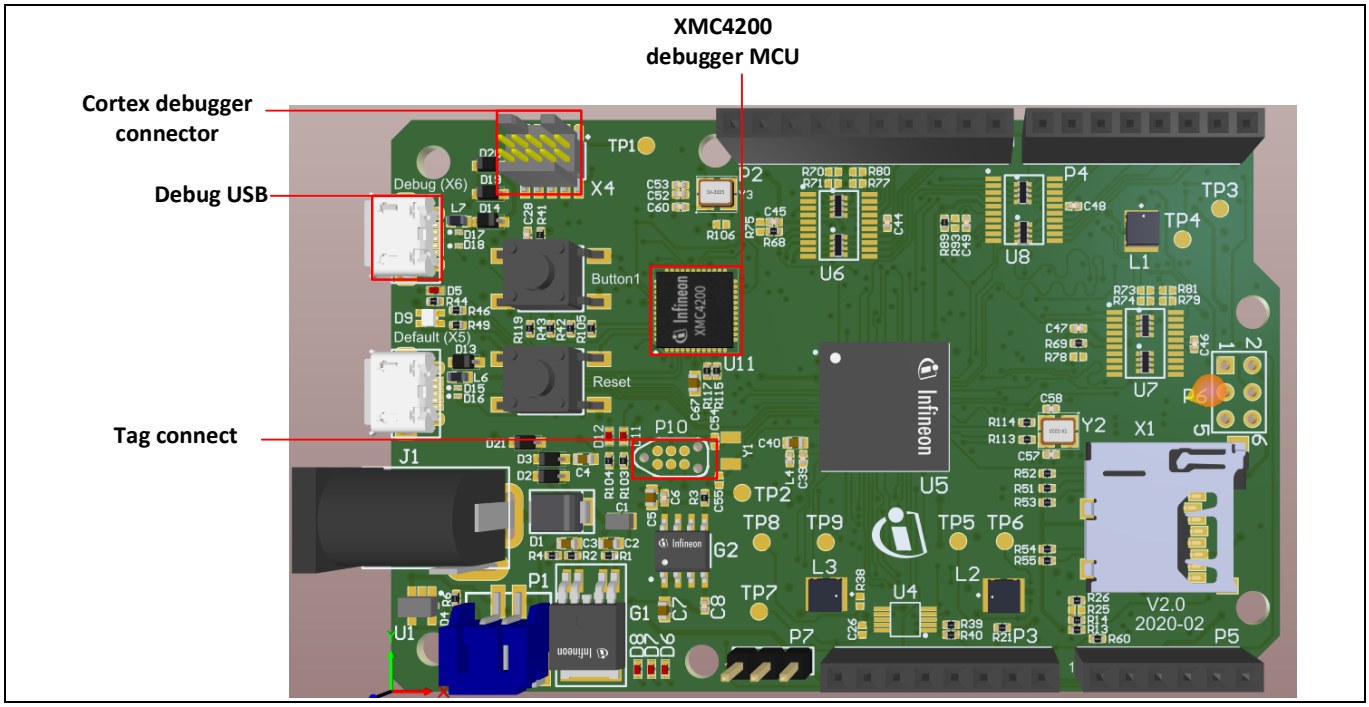

Figure 16 Debugger components

For debugging and flashing, the USB cable has to be simply connected to the “Debug USB” port. Header settings are no longer needed.

The Radar Baseboard MCU4 features an onboard debugger, which comes preloaded with licensed firmware for debugging and communicating with the main radar MCU via the UART pins. The onboard debugger supports two-pin SWD and UART communication. Both require the installation of SEGGER's J-Link driver, which is part of the DAVE™ installation.

During installation of the J-Link driver make sure to select the option "**Install USB Driver for J-Link-OB with CDC**", as shown in Figure 17.

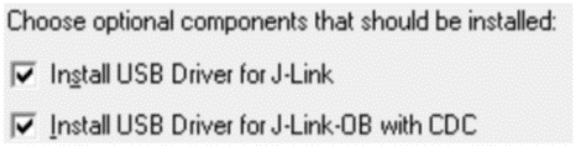

Figure 17 Recommended installation options for the J-Link driver

Table 7 shows the pin assignment of the XMC4200-VQFN48 MCU used for debugging and UART connection.

Table 7 XMC4200 pins used for debugging and UART communication

Port pin	Pin function
TMS (pin 33)	Data pin for debugging via SWD/SPD
TCK (pin 34)	Clock pin for debugging via SWD
P0.4 (pin 46)	Transmit pin for UART communication
P0.5 (pin 45)	Receive pin for UART communication

The debugger section supports communication between a PC/laptop and target XMC™ device via a UART-to-USB bridge).

References

[1] Infineon Technologies AG: XMC4700 32-bit Arm® Cortex®-M4 microcontroller datasheet; Available online

Revision history

Document revision	Date	Description of changes
1.00	2020-02-07	Initial version
2.00	2021-03-18	Updated based on board version V2.0
2.10	2023-02-14	Miscellaneous document cleanup updates

Trademarks
All referenced product or service names and trademarks are the property of their respective owners.

Edition 2023-02-14

Published by

Infineon Technologies AG

81726 Munich, Germany

© 2023 Infineon Technologies AG. All Rights Reserved.

Do you have a question about this document?

Email: erratum@infineon.com

Document reference

UG100136

Warnings

Due to technical requirements products may contain dangerous substances. For information on the types in question please contact your nearest Infineon Technologies office.

Except as otherwise explicitly approved by Infineon Technologies in a written document signed by authorized representatives of Infineon Technologies, Infineon Technologies' products may not be used in any applications where a failure of the product or any consequences of the use thereof can reasonably be expected to result in personal injury.