Revision History

Rev.	Date	Modified by	Remark
v10	2014.9.6	KL	first version
v11	2014.11.18	KL	1. Add Multicon I/F 2. Separate the Microphone and Headphone Jack
v12	2015.02.26	KL	1. Change the QSPI flash P/N to S25FL132K
v13	2015.05.12	KL	1. Replace the pSRAM with CY62147EV30LL-45B2XI 2. Remove analog switch in codec circuit 3. Add USB host 4. Pin out the free pins & adjust Arduino interface

Jumper Description

Jumper	Function	Setting
J1	MD0 configurartion of MB9AF312K	Open : User mode Close : Flash programming mode
J2	MD0 configurartion of S6E2CC	Open : User mode Close : Flash programming mode
J3	Multifunction	1-2: Flash programming via UART0 2-3 : USB VBUS detection/Flash programmng via USB
J4	Multifunction	1-2 : Power from CN2 2-3 : Power from CN3

Device Address(I2C)

Dev.	I2C channel	Address
Audio Codec	MFS2	0x1A
Acceleration Sensor	MFS8	0x0E

Debug & USBDevice
SK-FM4-176L-S6E2CC-02-Debug.SchDoc

Ethernet
SK-FM4-176L-S6E2CC-03-Ethernet.SchDoc

MCU and power supply
SK-FM4-176L-S6E2CC-01-MCU.SchDoc

Memory & Sensor & Arduino I/F
SK-FM4-176L-S6E2CC-05-Memory.SchDoc

Codec
SK-FM4-176L-S6E2CC-04-Codec.SchDoc

Cypress
Drawn by : KL

Title	FM4-176L-S6E2CC-ETH	
Size A2	Document Number Diagram	Rev v13
Date: Thursday, August 21,2014	Sheet 1 of 6	

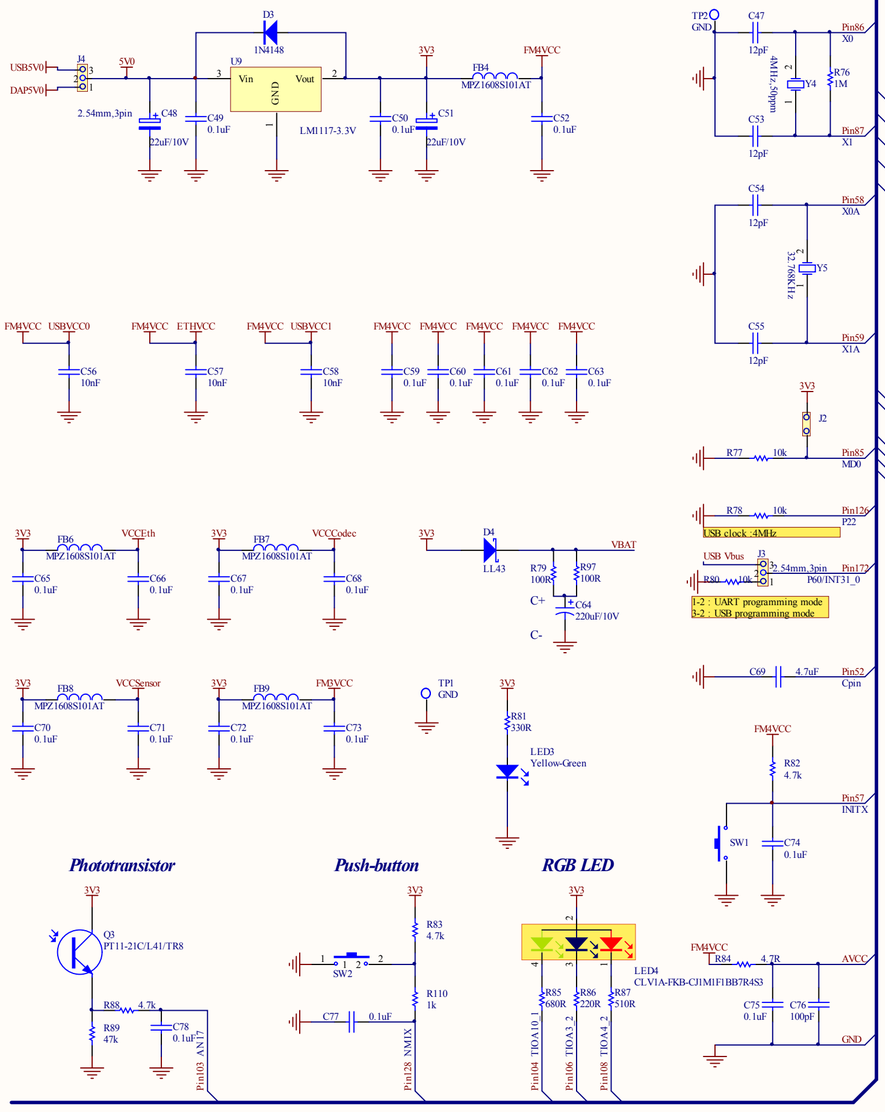

U8

FM4VCC	1	VCC	
Pin2	2	PA0/RTO20_0/TIOA8_0/AIN2_0/INT00_0/MADATA00_0	
Pin3	3	PA1/RTO21_0/TIOA9_0/BIN2_0/MADATA01_0	
Pin4	4	PA2/RTO22_0/TIOA10_0/ZIN2_0/MADATA02_0	
Pin5	5	PA3/RTO23_0/TIOA11_0/MADATA03_0	
Pin6	6	PA4/RTO24_0/TIOA12_0/MADATA04_0	
Pin7	7	PA5/SIN1_0/RTO25_0/TIOA13_0/INT01_0/MADATA05_0	
Pin8	8	PA6/SOT1_0/DTTI2X_0/MADATA06_0	
Pin9	9	PA7/SCK1_0/IC20_0/MADATA07_0	
Pin10	10	P50/SCS72_0/RTO00_1/TIOA8_2	
Pin11	11	P51/SCS73_0/RTO01_1/TIOB8_2	
Pin12	12	P52/RTO02_1/TIOA9_2	
Pin13	13	PA8/SIN7_0/IC21_0/INT02_0/WKUP1/MADATA08_0	
Pin14	14	PA9/SOT7_0/IC22_0/MADATA09_0	
Pin15	15	PAA/SCK7_0/IC23_0/MADATA10_0	
Pin16	16	PAB/SCS70_0/RX0_0/FRCK2_0/INT03_0/MADATA11_0	
Pin17	17	PAC/SCS71_0/TX0_0/TIOB8_0/AIN3_0/MADATA12_0	
Pin18	18	PAD/SCK3_0/TIOB9_0/BIN3_0/MADATA13_0	
Pin19	19	PAE/ADTG_0/SOT3_0/TIOB10_0/ZIN3_0/MADATA14_0	
Pin20	20	PAF/SIN3_0/TIOB11_0/INT16_0/MADATA15_0	
Pin21	21	PAF/SIN3_0/TIOB11_0/INT16_0/MADATA15_0	
Pin22	22	P09/SOT14_0/TIOB13_0/INT18_0/MDQM1_0	
Pin23	23	P0A/ADTG_1/SCK14_0/AIN2_1/MCLKOUT_0	
Pin24	24	P30/RX0_1/TIOA13_2/INT03_2/I2SDI_0	
Pin25	25	P31/TX0_1/TIOB13_2/I2SCK_0	
Pin26	26	P32/BIN2_1/INT19_0/S_DATA1_0	
Pin27	27	P33/FRCK0_0/ZIN2_1/S_DATA0_0	
Pin28	28	P34/IC03_0/INT00_1/S_CLK_0	
FM4VCC	29	VCC	
GND	30	VSS	
Pin31	31	P35/IC02_0/INT01_1/S_CMD_0	
Pin32	32	P36/IC01_0/INT02_1/S_DATA3_0	
Pin33	33	P37/IC00_0/INT03_1/S_DATA2_0	
Pin34	34	P38/ADTG_2/DTTI0X_0/S_WP_0	
Pin35	35	P39/SIN2_1/RTO00_0/TIOA0_1/AIN3_1/INT16_1/S_CD_0/MAD24_0	
Pin36	36	P3A/SOT2_1/RTO01_0/TIOA1_1/BIN3_1/INT17_1/MAD23_0	
Pin37	37	P3B/SCK2_1/RTO02_0/TIOA2_1/ZIN3_1/INT18_1/MAD22_0/MNALE_0	
Pin38	38	P3C/SIN13_0/RTO03_0/TIOA3_1/INT19_1/MAD21_0/MNCLE_0	
Pin39	39	P3D/SOT13_0/RTO04_0/TIOA4_1/MAD20_0/MNWEX_0	
Pin40	40	P3E/SCK13_0/RTO05_0/TIOA5_1/MAD19_0/MNREX_0	
Pin41	41	P5D/SIN10_1/TIOB11_2/INT01_2/I2SMCLK_0	
Pin42	42	P5E/SOT10_1/TIOA12_2/I2SDO_0	
Pin43	43	P5F/SCK10_1/TIOB12_2/I2SWS_0	
GND	44	VSS	
FM4VCC	45	VCC	
Pin46	46	P40/SIN3_1/RTO10_0/TIOA0_0/AIN0_0/INT23_0/MCSX7_0	
Pin47	47	P41/SOT3_1/RTO11_0/TIOA1_0/BIN0_0/MCSX6_0	
Pin48	48	P42/SCK3_1/RTO12_0/TIOA2_0/ZIN0_0/MCSX5_0	
Pin49	49	P43/SIN15_0/RTO13_0/TIOA3_0/INT04_0/MCSX4_0	
Pin50	50	P44/SOT15_0/RTO14_0/TIOA4_0/MCSX3_0	
Pin51	51	P45/SCK15_0/RTO15_0/TIOA5_0/MCSX2_0	
Pin52	52	C	
GND	53	VSS	
FM4VCC	54	VCC	
Pin55	55	P7D/SCK1_1/RX2_0/DTTI1X_0/INT05_0/WKUP2/MCSX1_0	
Pin56	56	P7E/ADTG_7/TX2_0/FRCK1_0/MCSX0_0	
Pin57	57	INITX	
Pin58	58	P46/X0A	
Pin59	59	P47/X1A	
VBAT	60	VBAT	
Pin61	61	P48/VREGCTL	
Pin62	62	P49/VWAKEUP	
Pin63	63	P80/SCS63_0/RX2_1/FRCK1_1/TIOA15_1/INT22_1	
Pin64	64	PF1/SCS62_0/TX2_1/TIOB15_1/INT23_1	
Pin65	65	P70/ADTG_8/SIN1_1/INT06_0/MRDY_0/CEC0_0	
Pin66	66	P71/SOT1_1/MAD00_0	
Pin67	67	P72/SIN9_0/TIOB0_0/INT07_0/MAD01_0	
Pin68	68	P73/SOT9_0/TIOB1_0/MAD02_0	
Pin69	69	P74/SCK9_0/TIOB2_0/MAD03_0	
Pin70	70	PF2/RTO10_1/TIOA6_1/MRASX_0	
Pin71	71	PF3/RTO11_1/TIOB6_1/INT05_1/MCASX_0	
Pin72	72	PF4/RTO12_1/TIOA7_1/INT06_1/MSDWEX_0	
Pin73	73	PF5/RTO13_1/TIOB7_1/INT07_1/MCSX8_0	
Pin74	74	P16/RTO14_1/TIOA14_1/INT20_1/MSDCKE_0	
Pin75	75	PF7/RTO15_1/TIOB14_1/INT21_1/MSDCLK_0	
Pin76	76	P75/SIN8_0/TIOB3_0/AIN1_0/INT20_0/MAD04_0	
Pin77	77	P76/SOT8_0/TIOB4_0/BIN1_0/MAD05_0	
Pin78	78	P77/SCK8_0/TIOB5_0/ZIN1_0/MAD06_0	
Pin79	79	P78/SIN6_0/IC10_0/INT21_0/MAD07_0	
Pin80	80	P79/SOT6_0/IC11_0/MAD08_0	
Pin81	81	P7A/SCK6_0/IC12_0/MAD09_0	
Pin82	82	P7B/DA1/SCS60_0/IC13_0/INT22_0	
Pin83	83	P7C/DA0/SCS61_0/INT04_1	
Pin84	84	PE0/MD1	
Pin85	85	MD0	
Pin86	86	PE2/X0	
Pin87	87	PE3/X1	
GND	88	VSS	
		VSS	176 GND
		P81/UDP0	175 Pin175
		P80/UDM0	174 Pin174
		USBVCC0	173 USBVCC0
		P60/SIN4_0/INT31_0/WKUP3/CEC1_0	172 Pin172
		P61/UHCONX0/SOT4_0/MALE_0/RTCCO_0/SUBOUT_0	171 Pin171
		P62/SCK4_0/MWEX_0	170 Pin170
		P63/ADTG_3/RTS4_0/INT30_0/MOEX_0	169 Pin169
		P64/CTS4_0/RTO25_1/INT29_1	168 Pin168
		P65/RTO24_1/INT28_1	167 Pin167
		P6E/ADTG_5/SCK4_1/IC23_1/INT29_0/E_PPS	166 Pin166
		PD2/CTS4_1/FRCK2_1/E_TXEN	165 Pin165
		PD1/INT31_1/E_TX00	164 Pin164
		PD0/INT30_1/E_TX01	163 Pin163
		PCF/RTS4_1/INT12_0/E_TX02	162 Pin162
		PCE/SIN4_1/INT15_0/E_TX03	161 Pin161
		PCD/SOT4_1/INT14_0/E_TXER	160 Pin160
		PCC/E_TCK	159 Pin159
		PCB/INT28_0/E_COUT	158 Pin158
		VSS	157 GND
		ETHVCC	156 ETHVCC
		PCA/TIOA15_0/E_CRS	155 Pin155
		PC9/TIOB15_0/E_COL	154 Pin154
		PC8/E_RXCK_REFCK	153 Pin153
		PC7/INT13_0/E_MDC/CROUT_1	152 Pin152
		PC6/TIOA14_0/E_MDIO	151 Pin151
		PC5/TIOB14_0/E_RXDV	150 Pin150
		PC4/TIOA7_0/E_RX00	149 Pin149
		PC3/TIOB7_0/E_RX01	148 Pin148
		PC2/TIOA6_0/E_RX02	147 Pin147
		PC1/TIOB6_0/E_RX03	146 Pin146
		PC0/E_RXER	145 Pin145
		P95/RTS5_1/Q_CS0_0	144 Pin144
		P94/CTS5_1/Q_SCK_0	143 Pin143
		P93/SCK5_1/INT15_1/Q_IO0_0	142 Pin142
		P92/SOT5_1/INT14_1/Q_IO1_0	141 Pin141
		P91/SIN5_1/INT13_1/Q_IO2_0	140 Pin140
		P90/INT12_1/Q_IO3_0	139 Pin139
		P04/TDO/SWO	138 Pin138
		P03/TMS/SWDIO	137 Pin137
		P02/TDI	136 Pin136
		P01/TCK/SWCLK	135 Pin135
		P00/TRSTX	134 Pin134
		VCC	133 FM4VCC
		VSS	132 GND
		P83/UDP1	131 Pin131
		P82/UDM1	130 Pin130
		USBVCC1	129 USBVCC1
		P20/NMIX/WKUP0	128 Pin128
		P21/ADTG_4/SIN0_0/INT27_0/CROUT_0	127 Pin127
		P22/AN31/SOT0_0/INT26_0	126 Pin126
		P23/UHCONX1/AN30/SCK0_0/TIOB13_1	125 Pin125
		P24/AN29/TIOA13_1/MAD18_0	124 Pin124
		P25/AN28/RX1_0/INT25_0/MAD17_0	123 Pin123
		P26/TX1_0/MAD16_0	122 Pin122
		P27/AN27/SIN5_0/INT24_0/MAD15_0	121 Pin121
		P28/AN26/SOT5_0/MAD14_0	120 Pin120
		P29/AN25/SCK5_0/MAD13_0	119 Pin119
		P2A/AN24/CTS5_0/MAD12_0	118 Pin118
		P1F/AN15/RTS5_0/TIOB8_1/INT27_1/MAD11_0	117 Pin117
		P1E/ANI4/TIOA8_1/INT26_1/MAD10_0	116 Pin116
		PB7/AN23/TIOB12_1/TRACED7	115 Pin115
		PB6/AN22/SCK8_1/TIOA12_1/TRACED6	114 Pin114
		PB5/AN21/SOT8_1/TIOB11_1/INT11_1/TRACED5	113 Pin113
		PB4/AN20/SIN8_1/TIOA11_1/INT10_1/TRACED4	112 Pin112
		P1D/AN13/SCK12_0/TIOB5_2/TRACED3	111 Pin111
		P1C/AN12/SOT12_0/TIOA5_2/TRACED2	110 Pin110
		P1B/AN11/SIN12_0/TIOB4_2/INT11_0/TRACED1	109 Pin109
		P1A/AN10/SCK2_0/TIOA4_2/TRACED0	108 Pin108
		P19/AN09/SOT2_0/TIOB3_2/INT24_1/TRACECLK	107 Pin107
		P18/AN08/SIN2_0/TIOA3_2/INT10_0	106 Pin106
		PB3/AN19/SCS62_1/TIOB10_1	105 Pin105
		PB2/AN18/SCS61_1/TIOA10_1/INT09_1	104 Pin104
		PB1/AN17/SCS60_1/TIOB9_1/INT08_1	103 Pin103
		PB0/AN16/SCK6_1/TIOA9_1	102 Pin102
		P17/AN07/SCK11_0/TIOB2_2/ZIN1_2	101 Pin101
		P16/AN06/SOT11_0/TIOA2_2/BIN1_2	100 Pin100
		P15/AN05/SIN11_0/TIOB1_2/AIN1_2/INT09_0	99 Pin99
		P14/AN04/SOT6_1/TX1_1	98 Pin98
		P13/AN03/SIN6_1/RX1_1/INT25_1	97 Pin97
		P12/AN02/SCK10_0/TIOA1_2/ZIN0_2	96 Pin96
		P11/AN01/SOT10_0/TIOB0_2/BIN0_2	95 Pin95
		P10/AN00/SIN10_0/TIOA0_2/AIN0_2/INT08_0	94 Pin94
		AVRH	93 AVCC
		AVRL	92 GND
		AVSS	91 GND
		AVCC	90 AVCC
		VCC	89 FM4VCC

Cypress		Drawn by : KL	
Title	FM4-176L-S6E2CC-ETH		
Size	Document Number		Rev
A3	MCU & Power supply		v13
Date: Thursday, August 21,2014		Sheet 2 of 6	

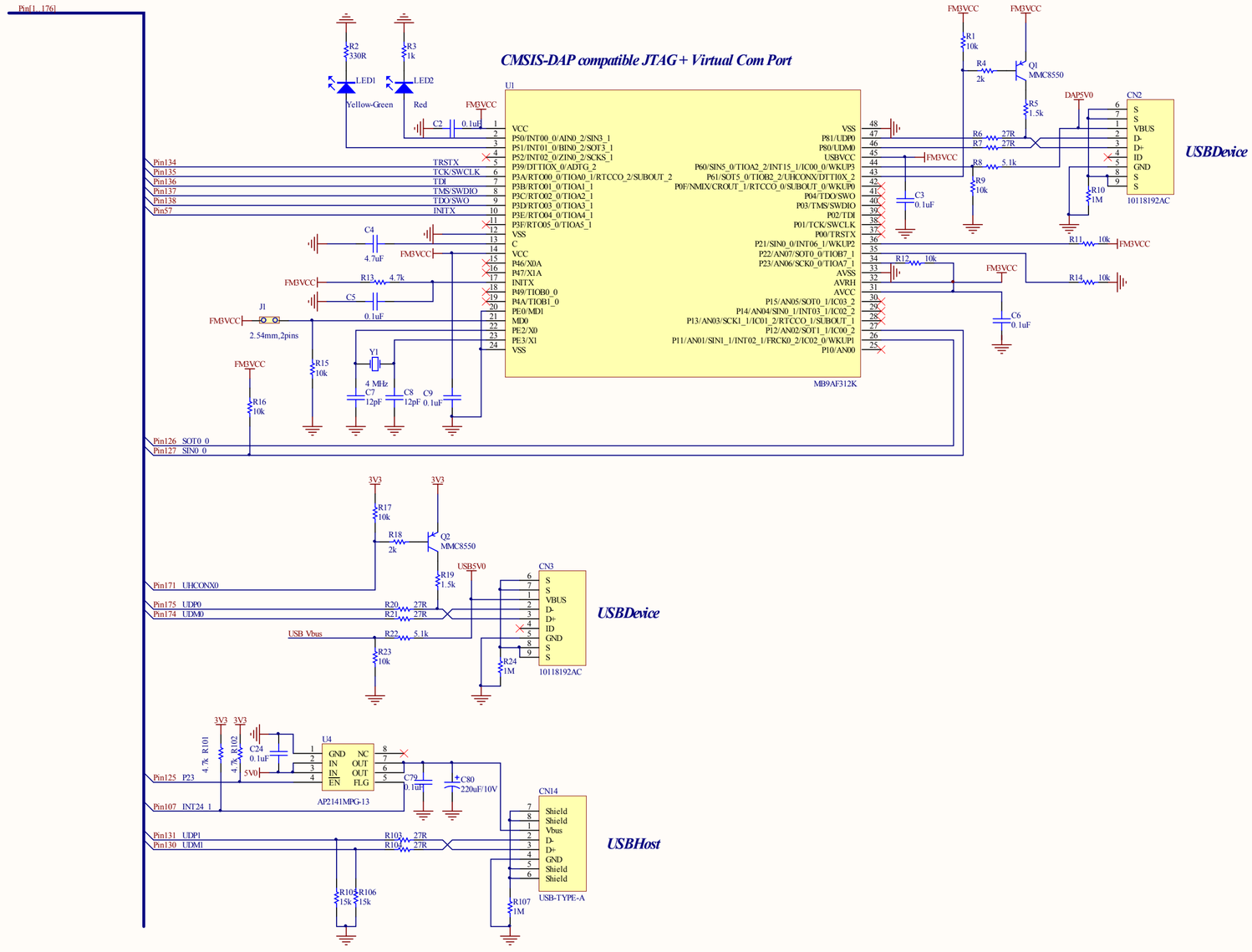

Cypress	Drawn by : KL	
Title	FM4-176L-S6E2CC-ETH	
Size: A2	Document Number: CMSIS-DAP & USBDevice	Rev: v13
Date: Thursday, August 21, 2014	Sheet 3 of 6	

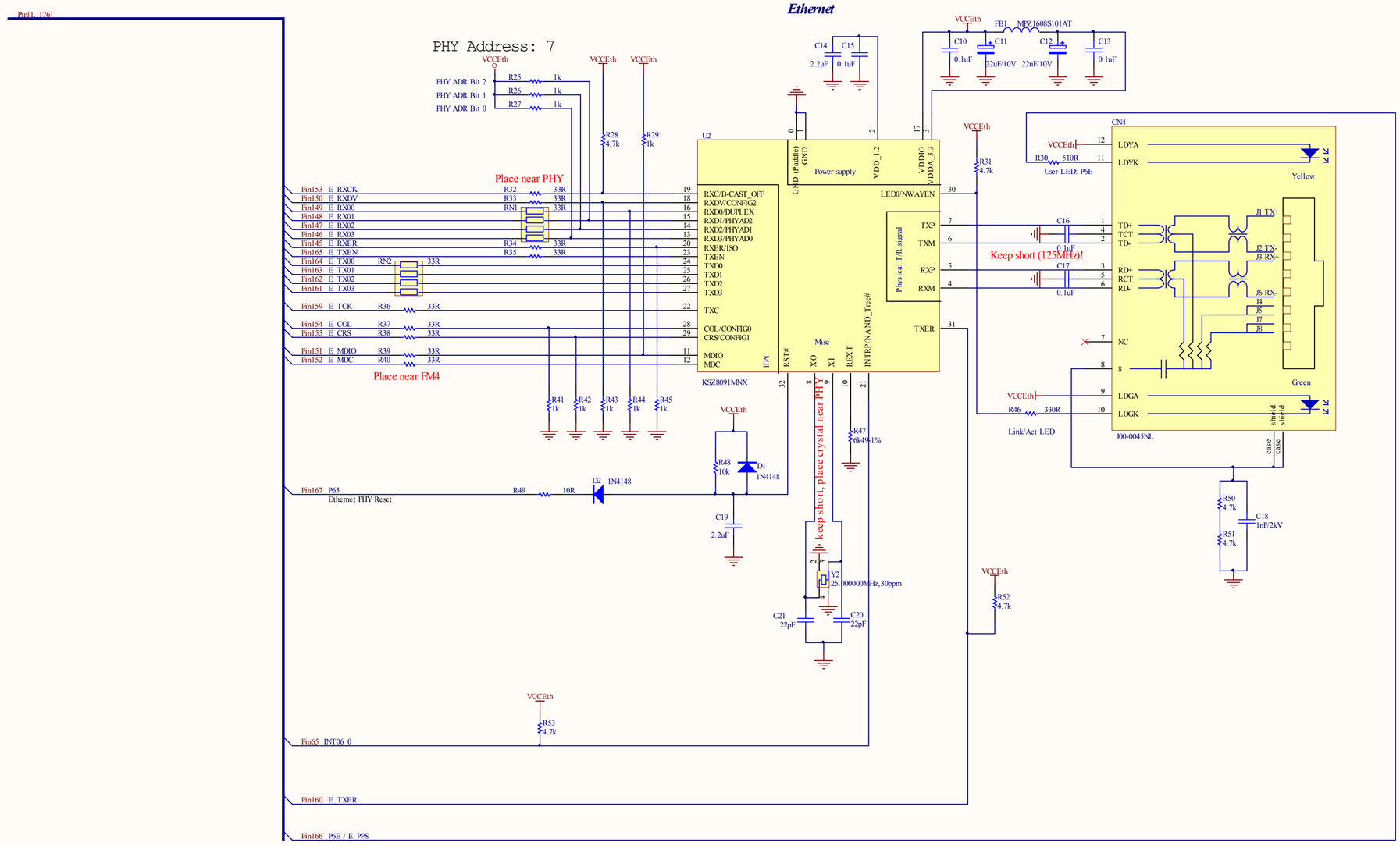

Cypress		
Drawn by : KL		
Title	FM4-176L-S6E2CC-ETH	
Size A2	Document Number Ethernet	Rev v13
Date: Thursday, August 21,2014	Sheet 4 of 6	

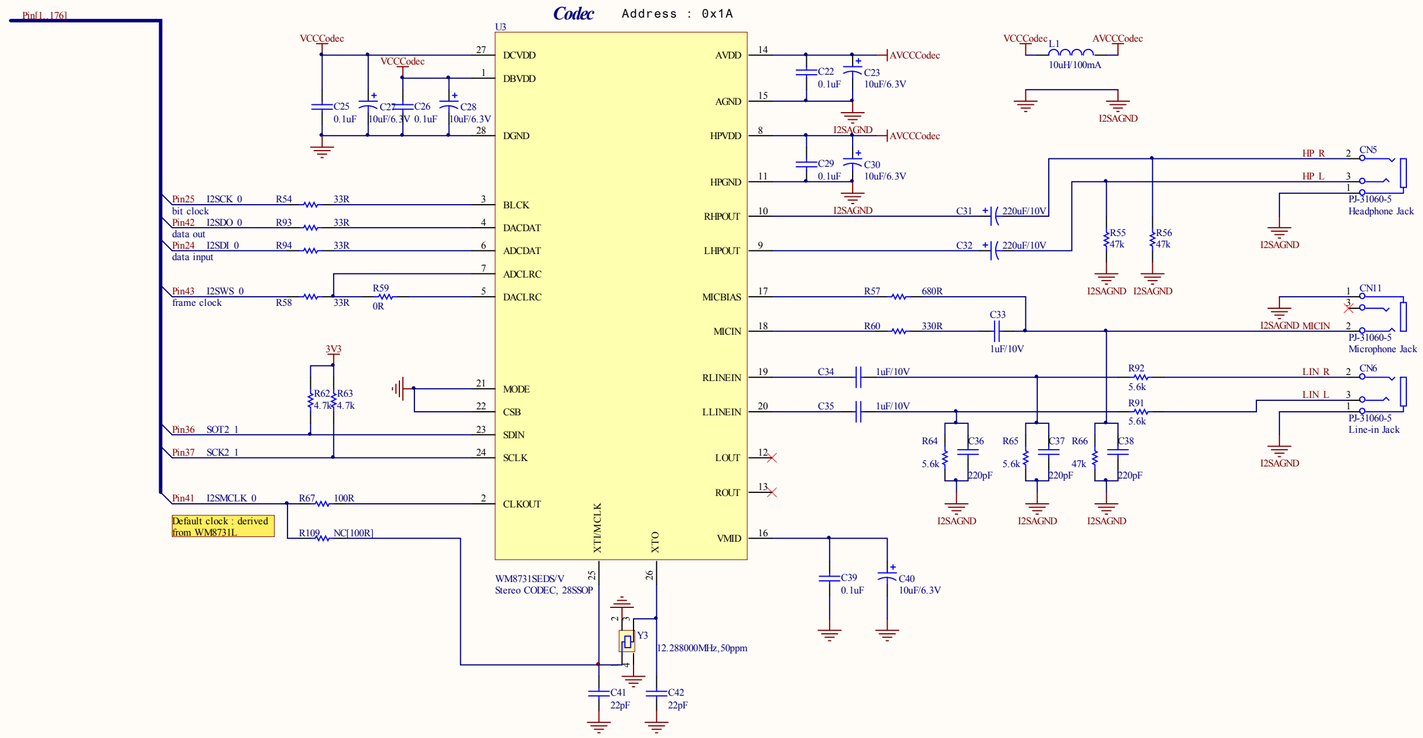

Cypress	
Drawn by : KL	
Title	FM4-176L-S6E2CC-ETH
Size: A2	Document Number: Codec
Rev	v13
Date: Thursday, August 21,2014	Sheet 5 of 6

SRAM

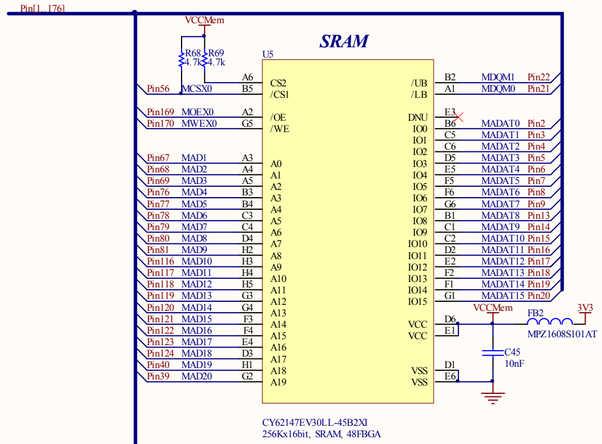

Flash

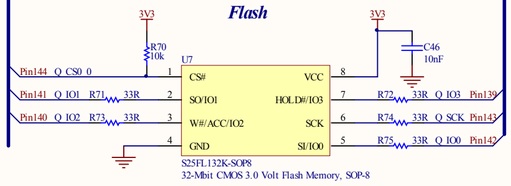

Acceleration Sensor

Address : 0x0E

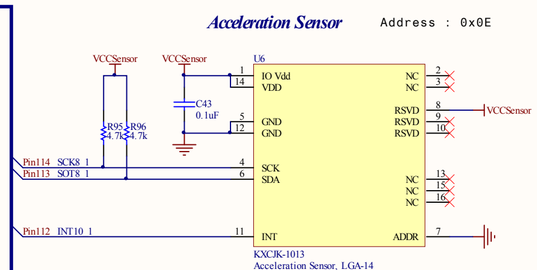

Arduino Shield I/F

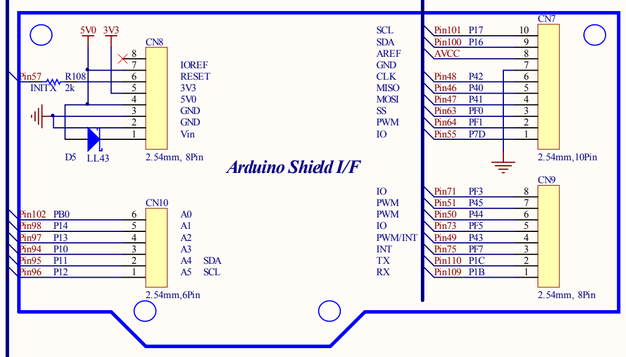

Free Pins

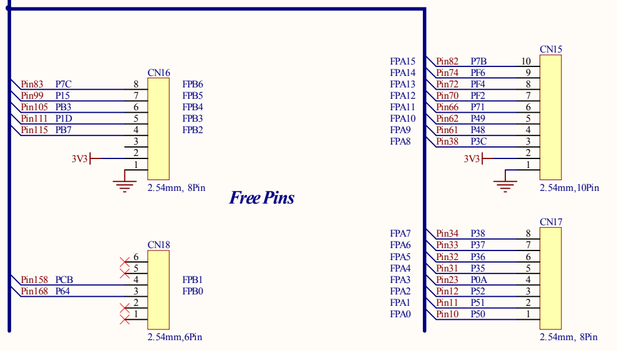

Cypress		
Drawn by : KL		
Title	FM4-176L-S6E2CC-ETH	
Size: A2	Document Number: Memory & Sensor & Arduino I/F	Rev: v13
Date: Thursday, August 21,2014	Sheet 6 of 6	