Getting started with REF-MHA0K3IRC2PSOC4 cost-optimized motor control kit

About this document

Scope and purpose

This document is a guide to get started with cost-optimized motor control kit (REF-MHA0K3IRC2PSOC4 board) for sensor-less FOC control with PSOC™ 4 for inverter refrigerator compressors . This guide includes the firmware structure, hardware connections, parameter configurations, and debug steps.

Intended audience

This document is intended for motor control technical specialists who are interested in a low-cost motor control solution.

Table of contents

Table of contents

About this document **1**
Table of contents **2**
1 Hardware overview **3**
1.1 Components 3
1.1.1 PSOC™ 4 – Arm® Cortex®-M0 and M0+ based microcontroller 3
1.1.2 ICE5BR4780BZ – Fixed-frequency AC-DC regulator 3
1.1.3 TLE4296-2G V50 – Monolithic integrated LDO 4
1.1.4 6EDL04I06PT – 600 V three-phase gate driver 4
1.1.5 IKD06N60RC2 – IGBT Discrete 4
1.2 Hardware connection 5
2 Prerequisites **6**
2.1 Firmware package 6
2.2 Software tools 9
2.2.1 PSOC™ Creator 9
2.2.2 IAR version 8.4 9
2.2.3 Segger J-Link 11
3 Getting started **12**
3.1 Configure compressor parameters in software 13
3.2 Compile and live debug 15
3.3 Run motor 17
4 Resources **18**
4.1 Schematic of REF-MHA0K3IRC2PSOC4 18
Glossary **22**
Revision history **24**
Disclaimer **25**

1 Hardware overview

The REF-MHA0K3IRC2PSOC4 board is a 200 W single-shunt evaluation board controlled by a PSOC™ 4 microcontroller. It demonstrates Infineon's high-performance power components working with state-of-the-art motor control libraries. With this board and demo solution, you can easily drive a home refrigerator's compressor.

The cost-optimized motor control kit contains:

- REF-MHA0K3IRC2PSOC4 board
- Quick Start guide

Prerequisites:

- AC power supply at 176-265 VRMS that provides 1.5 A of peak current.
- A PMSM motor that supports maximum power output of 300 W. The recommended part to evaluate this kit is VMH1113Y R600a hermetic compressor.
- For frequency interface input to control the motor speed, a signal generator with digital square wave (5 V DC) that supports 40 Hz to 150 Hz frequency. This is optional and IAR can be used to control the speed manually in Live Debug mode.

1.1 Components

The hardware topology is the same as traditional FOC-based motor control; however, the power stage has some differences. The DC bus voltage capacitor is replaced with a small CBB capacitor (usually at 3 µf to 10 µf). The main components include:

- PSOC™ 4 – Arm® Cortex®-M0 and M0+ based microcontroller
- ICE5BR4780BZ – Fixed-frequency AC-DC regulator
- TLE4296-2G V50 – Monolithic integrated LDO
- 6EDL04I06PT – 600 V three-phase gate driver
- IKD06N60RC2 – IGBT Discrete

1.1.1 PSOC™ 4 – Arm® Cortex®-M0 and M0+ based microcontroller

- Based on PSOC™ 4100S series MCU with 48-MHz Arm® Cortex®-M0+ CPU
- Up to 64 KB of flash with read accelerator
- Up to 8 KB of SRAM
- 12-bit 1-Msps SAR ADC with differential and single-ended modes
- Two opamps with reconfigurable high-drive external and high-bandwidth internal drive and comparator modes and ADC input buffering capability
- Two low-power comparators

For more information, see the CY8C4146AZI-S423 webpage.

1.1.2 ICE5BR4780BZ – Fixed-frequency AC-DC regulator

- 65 kHz offline flyback and buck regulator with integrated 800 V CoolMOS™ super junction MOSFET

For more information, see the ICE5BR4780BZ webpage.

1 Hardware overview

1.1.3 TLE4296-2G V50 – Monolithic integrated LDO

- A monolithic integrated low-drop voltage regulator Thin-film-SOI-technology

For more information, see the TLE4296-2G V50 webpage.

1.1.4 6EDL04I06PT – 600 V three-phase gate driver

- Integrated bootstrap diode
- Thin-film-SOI-technology
- Maximum blocking voltage +600V
- Separate control circuits for all six drivers
- CMOS and LSTTL compatible input (positive logic)
- Signal interlocking of every phase to prevent cross-conduction
- Detection of over current and under voltage supply

For more information, see the 6EDL04I06PT webpage.

1.1.5 IKD06N60RC2 – IGBT Discrete

- 600 V, 6 A IGBT Discrete with Reverse Conducting Drive 2-diode in TO-252 package
- Improved controllability
- Operating range up to 20 kHz
- Humidity robust design
- Short circuit capability 3 us at 400V Vcc , TC = 150°C
- Junction temperature 175°C
- Very tight parameter distribution
- Pb free lead plating, RoHs compliant
- Complete product spectrum and SPICE models

For more information, see the IKD06N60RC2 webpage.

1 Hardware overview

1.2 Hardware connection

Before powering up the board, do the following connections:

- Connect the connector phase line to X6 connector. Ensure that the U V W signals connected to the compressor in clockwise order.
- Connect the AC supply from the grid to X1 connector. The AC power supply voltage must be within the range of 176 to 265 V_{RMS}.
- Connect the J-Link to the laptop's USB port and the board's debug interface.

By default, the board is pre-programmed with the firmware for the VMH1113Y R600a hermetic compressor. If another part is used, change the firmware. For more details, see Configure compressor parameters in software.

On powering up the board, the LED blinks to show that the board works normally.

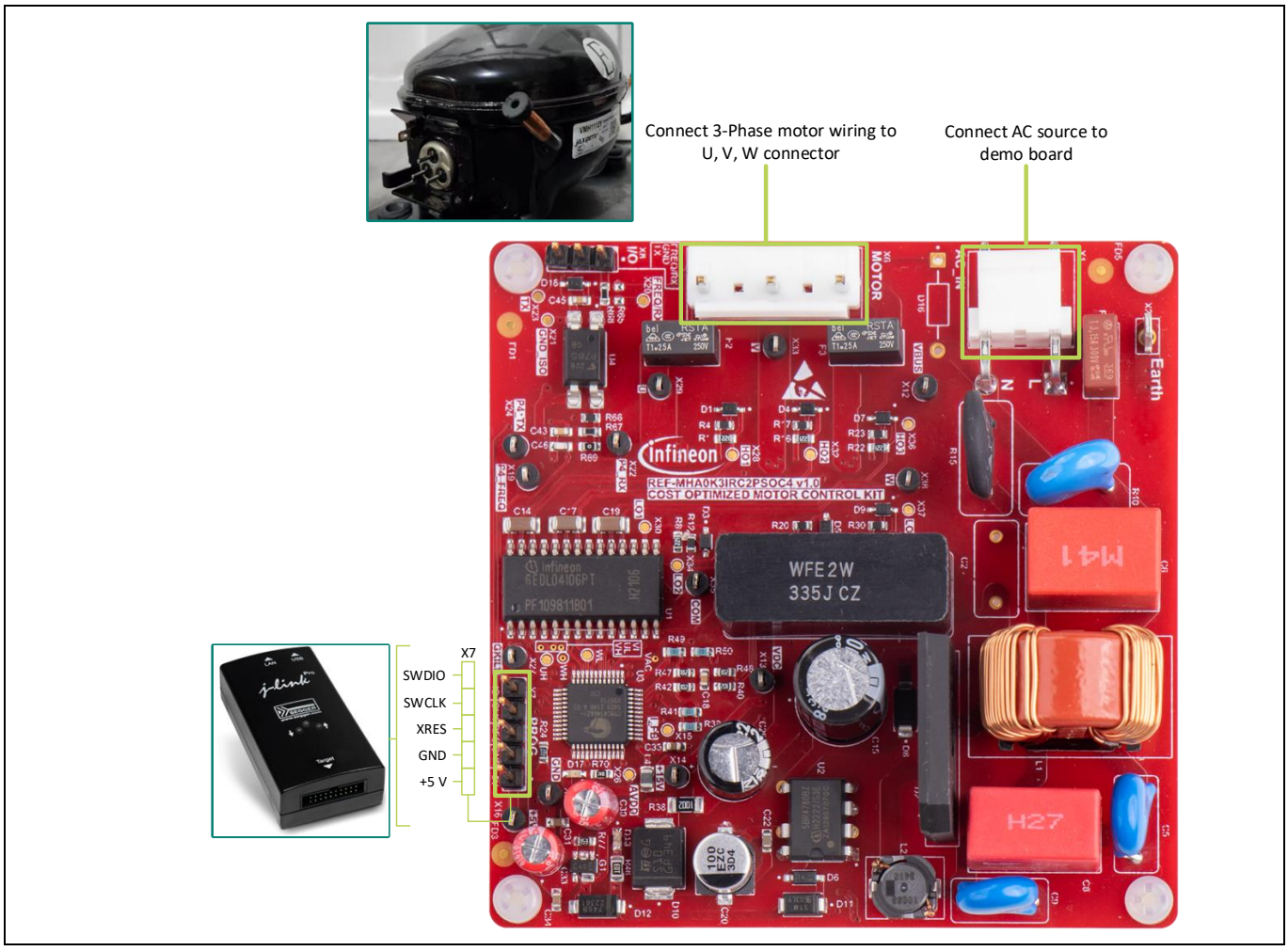

Figure 1 Hardware connection

Click or tap here to enter text.

2 Prerequisites

Download the firmware package, install the required development software tool and prepare the Segger J-Link debugger. The following tools are required:

- IAR version 8.40.1 or higher is required to compile and debug the software project.
- J-Link tool version V9 or higher is needed for debugging with J-link.
- PSOC™ creator tool is used to generate the PSOC™ low-level drive code. However, if you only use the demo board with demo software and do not need to modify the hardware configuration for another board, the PSOC™ Creator tool is not necessary.

The following sections provide the steps to download the firmware package and install the required software tools.

2.1 Firmware package

You can download the firmware package for the REF-MHA0K3IRC2PSOC4 board is available from the Infineon Development Center. Follow these steps to access the source code package:

1. Go to the Infineon REF-MHA0K3IRC2PSOC4 Firmware webpage in the Infineon Development Center.
2. Click on the "**Request**" button on the listed zip package, as shown in Figure 2.

   The "Infineon REF-MHA0K3IRC2PSOC4 Firmware" package will be added into your cart.

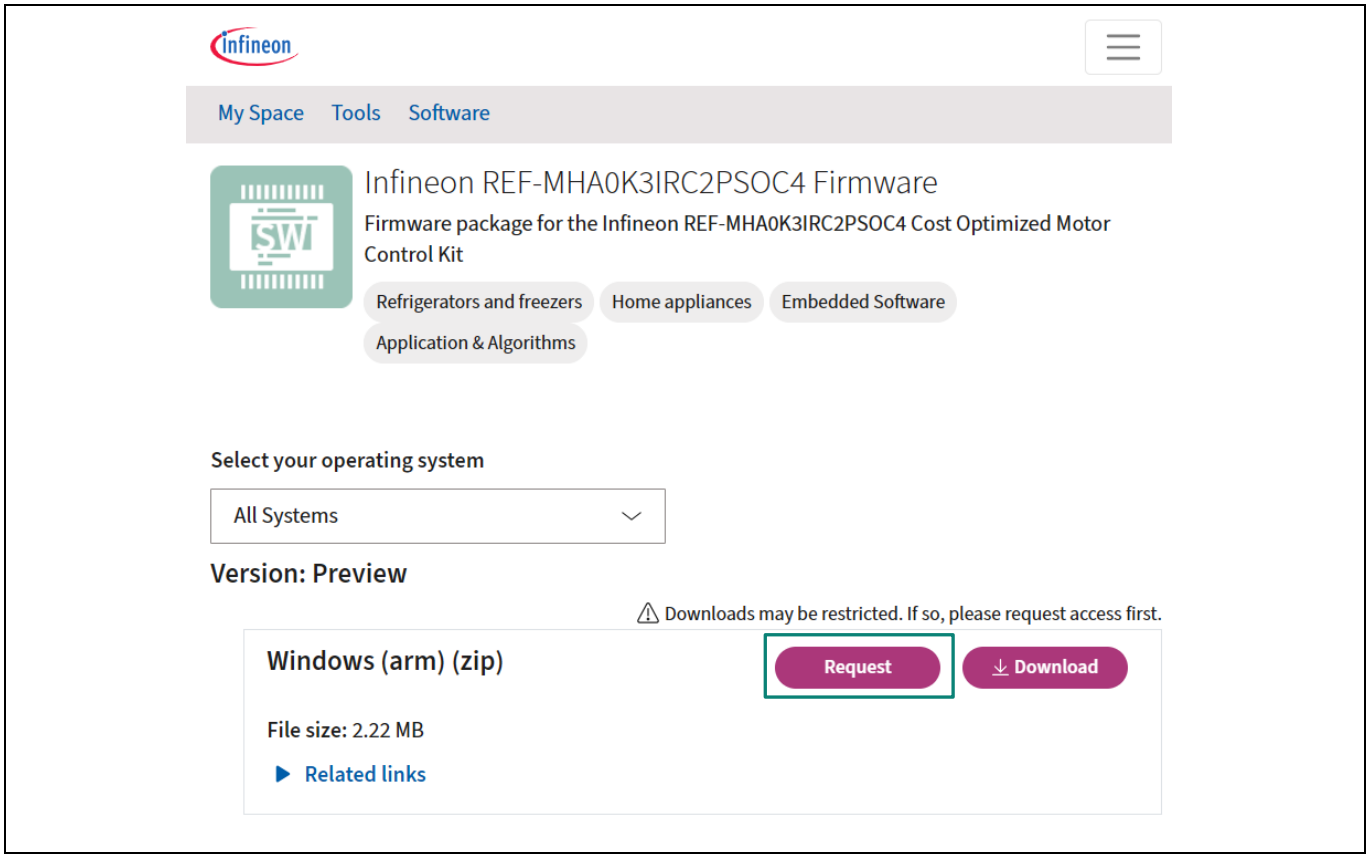

Figure 2 Request Access to firmware package

3. After requesting, the following window appears. Click on **View cart**. It directs you to the cart.

2 Prerequisites

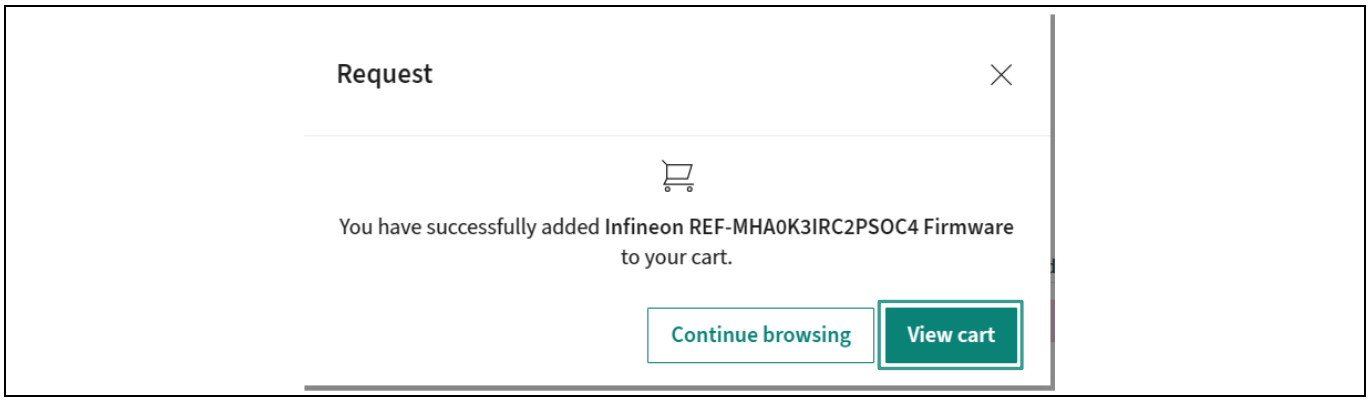

Figure 3 Go to cart

4. Click the "**Request"** button as shown in Figure 4 to request an access to the package added in the cart.

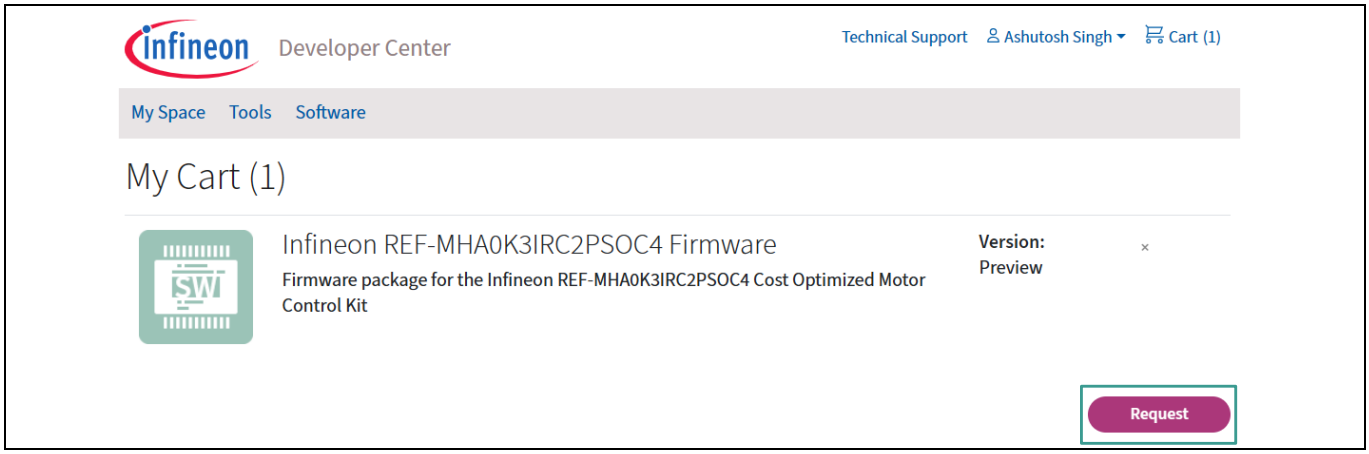

Figure 4 Request access to the package added in cart

5. After requesting, the "**Checkout: Additional Information**" Questionnaire is displayed (see Figure 5).

   Fill the questionnaire(s) to proceed further with your order.

2 Prerequisites

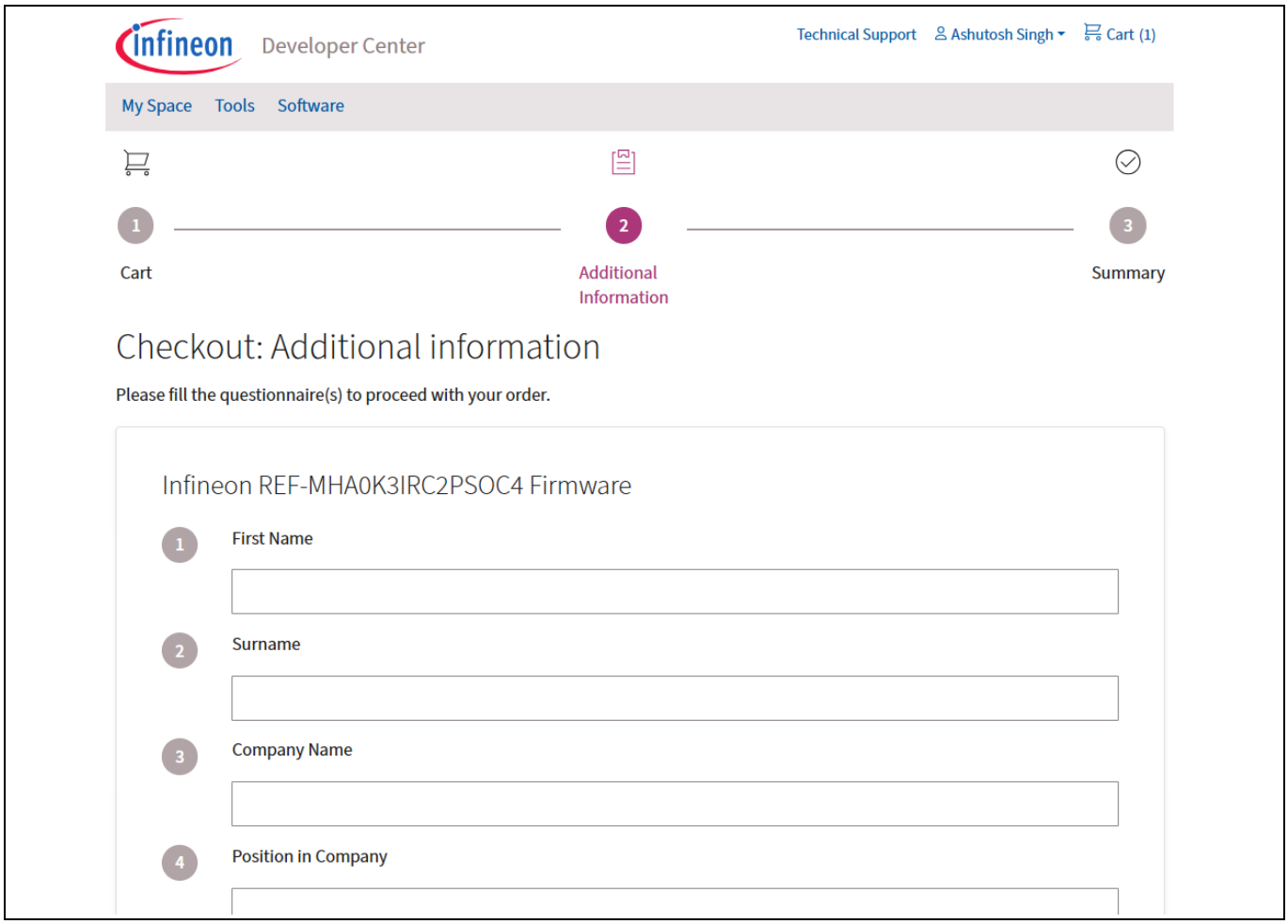

Figure 5 Fill the Checkout: Additional Information questionnaire

6. Click "**Submit request**" button after filling in all the information.

   The request will be sent for license approval. Once license is granted, you will receive an email with the steps to download the firmware package.

2 Prerequisites

2.2 Software tools

2.2.1 PSOC™ Creator

Download the PSOC™ Creator tool from the PSOC™ Creator installer package. PSOC™ Creator helps you configure and program analog and digital peripheral functionality into a PSOC™ device.

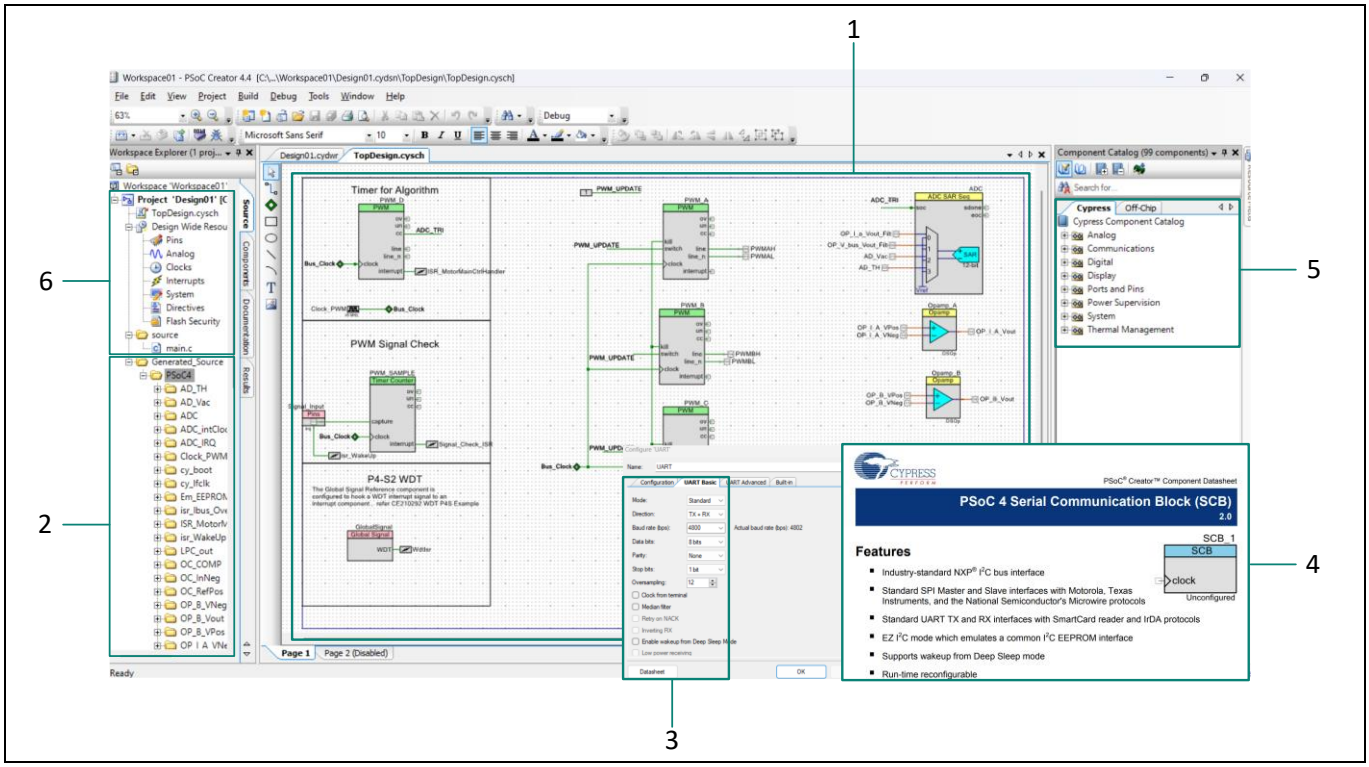

Figure 6 Components of PSOC™ Creator

1. Drag and drop the components to build the hardware system design.
2. Compile the generated underlying files.
3. Use configuration tools to configure components.
4. View the component datasheet.
5. Search the component.
6. Configure the system (i.e., pin allocation, clock, reference voltage, and so on.)

2.2.2 IAR version 8.4

The IAR Embedded Workbench is used to compile and debug the firmware live. Additionally, you can use the workbench to change the different parameters live and see the changes in real time. The application can be downloaded from IAR Workbench installer package.

Figure 7 shows a view of IAR Embedded Workbench showing different sections of the UI in a typical debug setup for online debugging of motor control.

2 Prerequisites

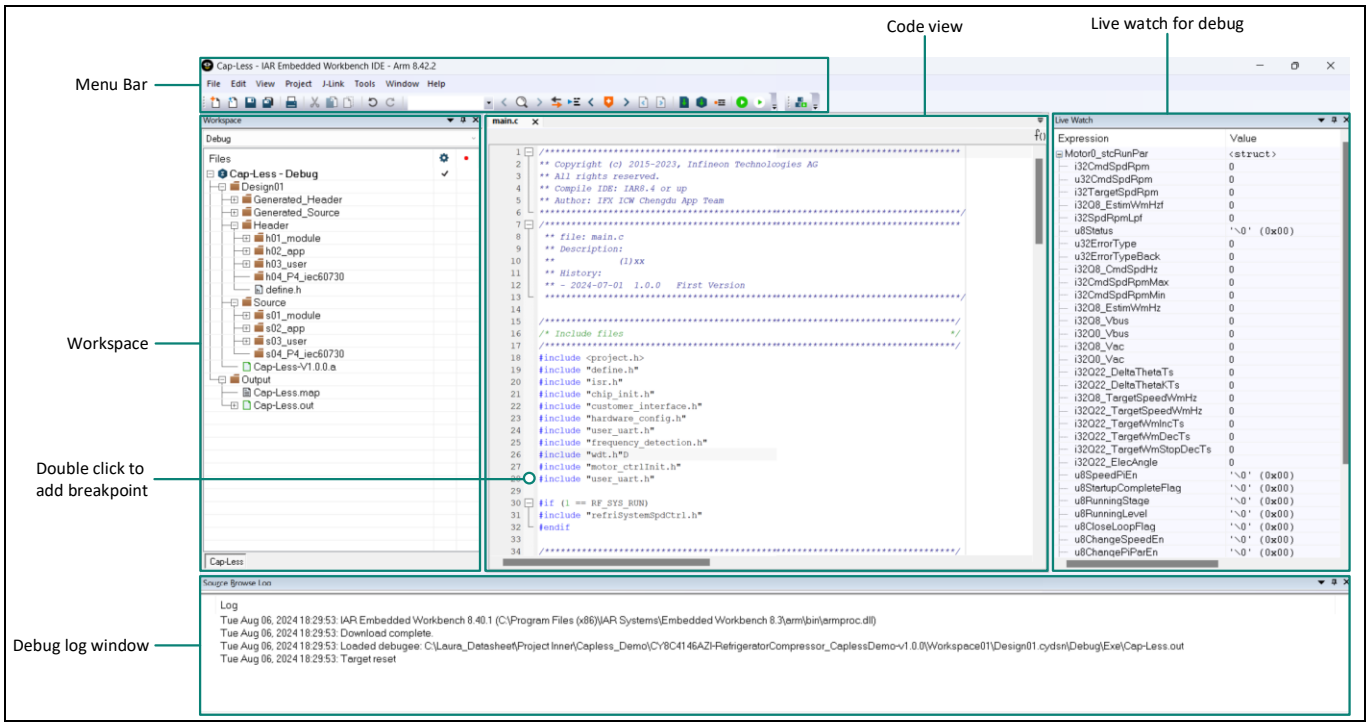

Figure 7 IAR Embedded Workbench IDE

To check the version of the application, go to **Help Menu** > **About** > **Product Info.**

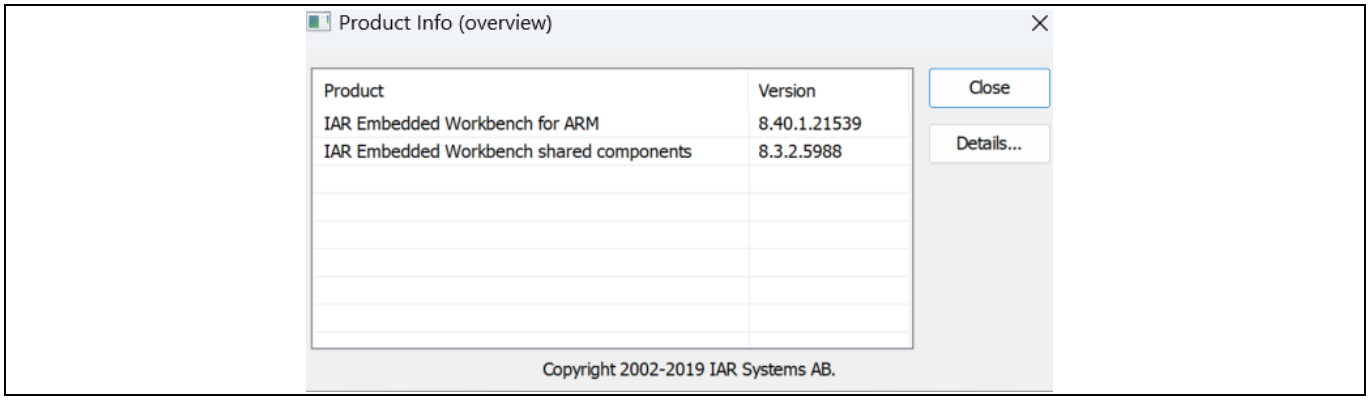

Figure 8 IAR IDE version 8.4 or later

2 Prerequisites

2.2.3 Segger J-Link

Segger J-Link V9 or later version is required. The board supports SWD mode to debug the board.

Figure 9 shows the connections needed for this setup.

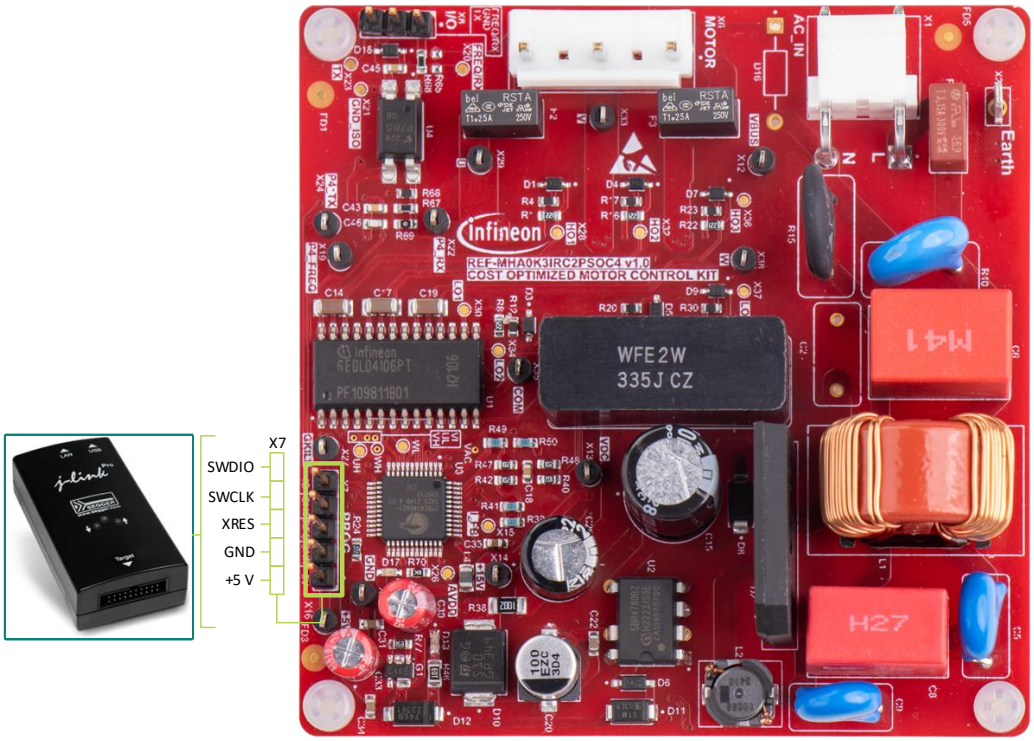

Figure 9 Segger J-Link connections

3 Getting started

3 Getting started

Do the following to get started with the kit:

1. Open the following project folder (see the Firmware package section for steps to download):

   CY8C4146AZI-RefrigeratorCompressor_CaplessDemo v1.0.0\Workspace01\Design01.cydsn

2. Open IAR Embedded Workbench IDE.
3. From **File** menu, click on **Open Workspace** to open the project (see Figure 10).

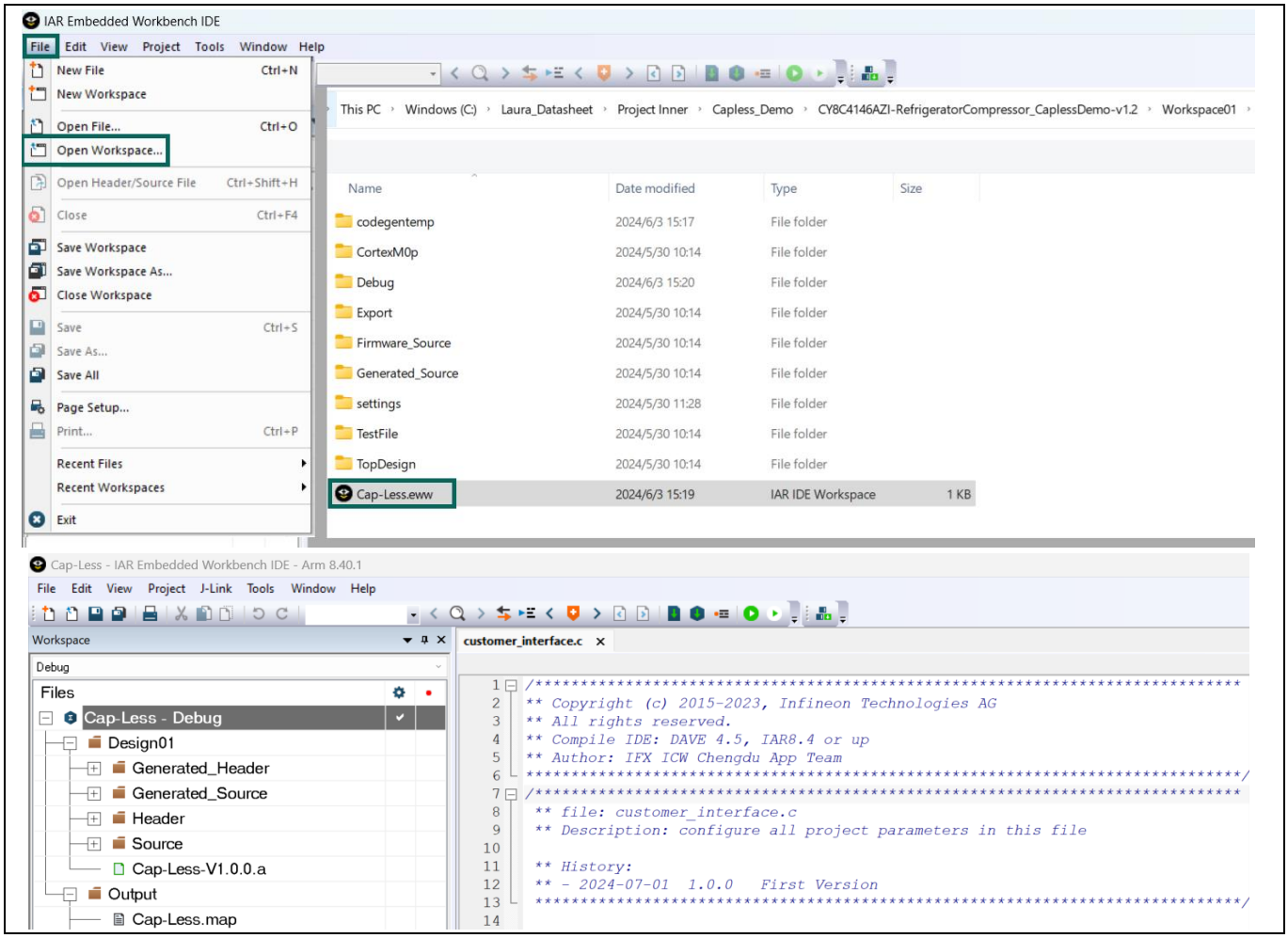

Figure 10 Open workspace

3 Getting started

3.1 Configure compressor parameters in software

The default compressor of the demo project is VMH1113Y. No changes in the firmware are needed if the same compressor part is used.

If another compressor is used, do the following steps to edit the configuration:

1. Open the following folder:

   Workspace01\Design01.cydsn\Firmware_Source\h03_user.

2. Copy the *compressor_VMH1113Y_config.h* file and rename it as you prefer (for example, *compressor_MyType_config.h*).
3. Open the newly created file and modify the following parameters:
   - Set the motor base parameters (see compressor motor datasheet for these parameters).

Code listing 1 Motor base parameter

```
040        /*
041         * motor base parameter
042         */
043        int32_t  ui_M0_i32PolePairs = 3; // the pole pairs of motor
044        float    ui_M0_f32Ld        = 48.0f; // (mh) d axis reductance
045        float    ui_M0_f32Lq        = 56.0f; // (mh) q axis reductance
046        float    ui_M0_f32Rs        = 20.0f; // (ohm) 2 line phase
           resistance
047        float    ui_M0_f32Ke        = 55.0;   // (Vrms/Krpm) inductive
           voltage between two phases
```

   - Set the motor phase maximum work current as mentioned in the motor data sheet.

Code listing 2 Motor phase maximum work current

```
041
042        #define   MOTOR_CURRENT        3
043
```

   - Set initial current PI parameter as mentioned in the user guide (see the Cost-optimized motor control kit REF-MHA0K3IRC2PSOC4 user guide).

Code listing 3 Initial current PI parameter

```
135        float ui_M0_f32qKp_Init      = 90.0f*6/6; // q PI Kp,
           Lq*CarryFreq/6
136        float ui_M0_f32qKi_Init      = 10.0f/6;  // q PI Ki, R/6
137        float ui_M0_f32dKp_Init      = 60.0f*6/6;      // d PI Kp,
           Ld*CarryFreq/6
138        float ui_M0_f32dKi_Init      = 10.0f/6;  // d PI Ki, R/6
```

3 Getting started

- Set normal run current PI parameter as mentioned in the user guide (see the cost -optimized motor control kit REF-MHA0K3IRC2PSOC4 user guide).

Code listing 4 Normal run current PI parameter

```
140  float ui_M0_f32qKp           = 90.0f*6/4; // q PI Kp,
     Lq*CarryFreq/3, range: Lq*CarryFreq/3 to Ld*CarryFreq/6
141  float ui_M0_f32qKi           = 10.0f/2;   // q PI Ki, R/3
142  float ui_M0_f32dKp           = 60.0f*6/4; // d PI Kp,
     Ld*CarryFreq/3; range: Ld*CarryFreq/3 to Ld*CarryFreq/6
143  float ui_M0_f32dKi           = 10.0f/3;  // d PI Ki, R/3;
     range: R/2 to R/3
```

- Make sure that the orient current is lesser than the close loop current.

Code listing 5 Orient current

```
209  /* orient process: 1st and 2nd parameters set */
210  /* ui_M0_f32Orient2ndCurrentA >= ui_M0_f32Orient1stCurrentA */
211  /* ui_M0_f32Orient1stKeepTimeS can be set 0 */
212  float ui_M0_f32OrientCurrentSlopAps   = 5.0f;   // (A/s)
     orient rotor current increase slop
213  float ui_M0_f32Orient1stCurrentA      = 1.0f;   // (A) first
     orient current
214  float ui_M0_f32Orient1stKeepTimeS     = 0.5f;   // (s) first
     current orient keep time
215  float ui_M0_f32Orient2ndCurrentA      = 2.0f;   // (A) first
     orient current
216  float ui_M0_f32Orient2ndKeepTimeS     = 1.0f;   // (s) second
     current orient keep time
217  uint8_t ui_M0_u8EnOrientLosePhaseDetect = 1;     // enable or
     disable lose phase check in orient process
218  uint8_t ui_M0_u8EnOrientRsDetect        = 1;     // enable or
     disable motor stator resistor check in orient process
219  //Note: when ui_M0_u8EnOrientRsDetect or
     ui_M0_u8EnOrientLosePhaseDetect set as 1,
     ui_M0_f32Orient2ndKeepTimeS must > 0.5
```

4. Open the *Workspace01\Design01.cydsn\Firmware_Source\s03_user\customer_interface.c* file and include the new motor type file.

Code listing 6 Include new motor defined file

```
021  /*************************************************************
022   * include motor defined
023   *************************************************************/
024  #include "h03_user\compressor_VMH1113Y_config.h"
025  //#include "h03_user\compressor_HVM65MK_config.h"
026  //#include "h03_user\compressor_DZ120A1W_config.h"
```

3 Getting started

3.2 Compile and live debug

Two methods to compile the IAR project are:

- Method 1: Right click on the project in the “Workspace” window in the tool and use the “Make” or “Rebuild All” options.
- Method 2: Click on the button, which is a “Make” option available on the toolbar, as shown in Figure 11.

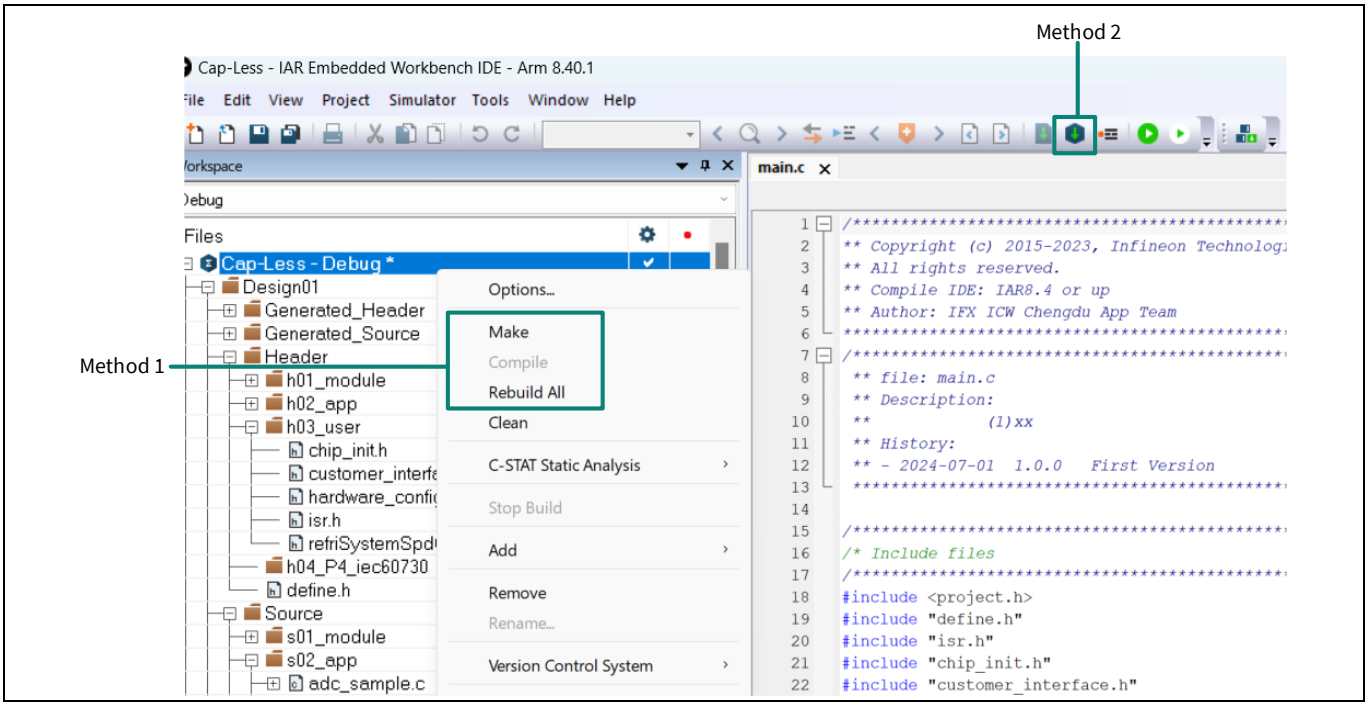

Figure 11 Compile the project

For online debugging, click the button, as shown in Figure 12.



Figure 12 Online debug

Go to **View** > **Live Watch**. In the Live Watch window, add the “Motor0_stcRunPar” structure and expand it. Modify the value of the **i32CmdSpdRpm** structure field to a non-zero number (see Figure 13).

3 Getting started

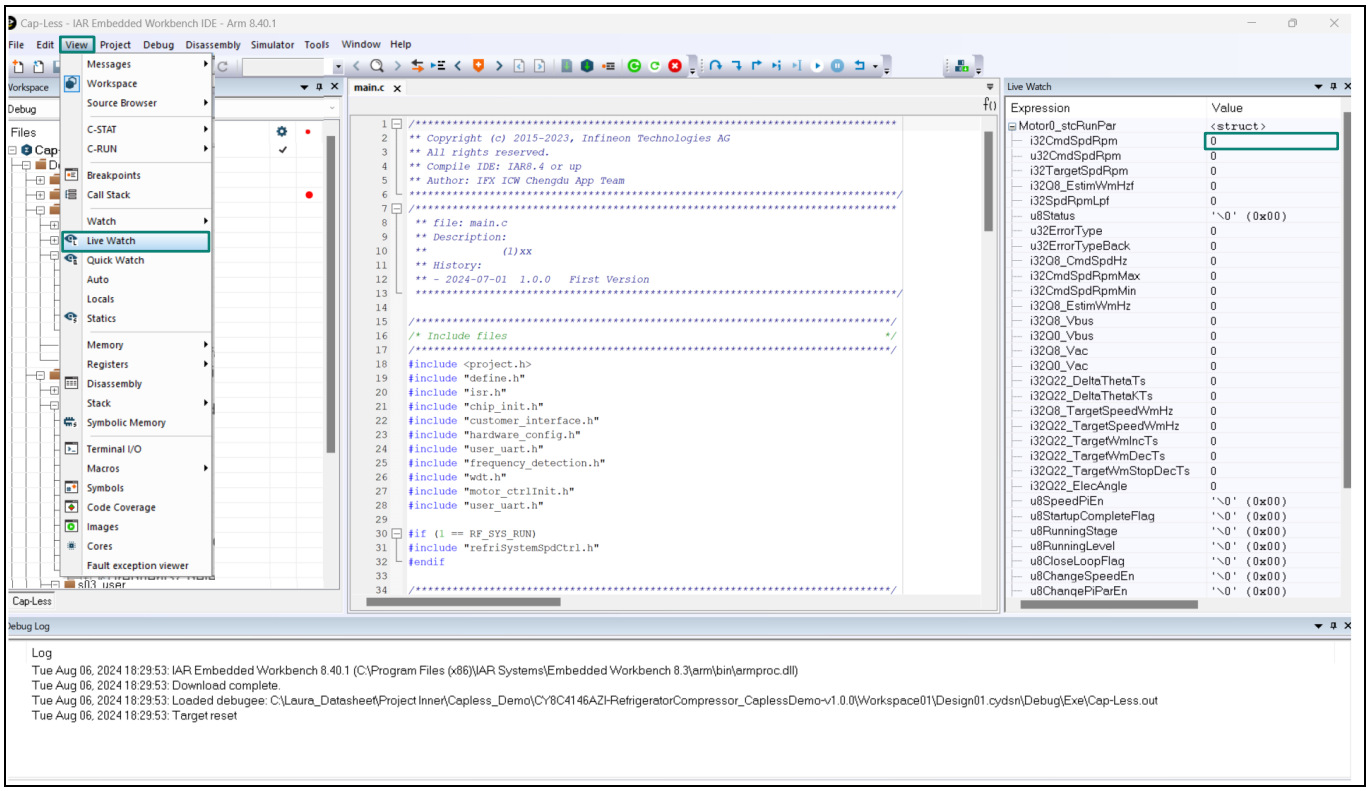

Figure 13 Live Watch window

3 Getting started

3.3 Run motor

In the IAR live watch window, watch the variable **Motor0_stcRunPar.u32ErrorType** is '0', set the speed to run the motor. When motor is running, motor speed status is auto changed.

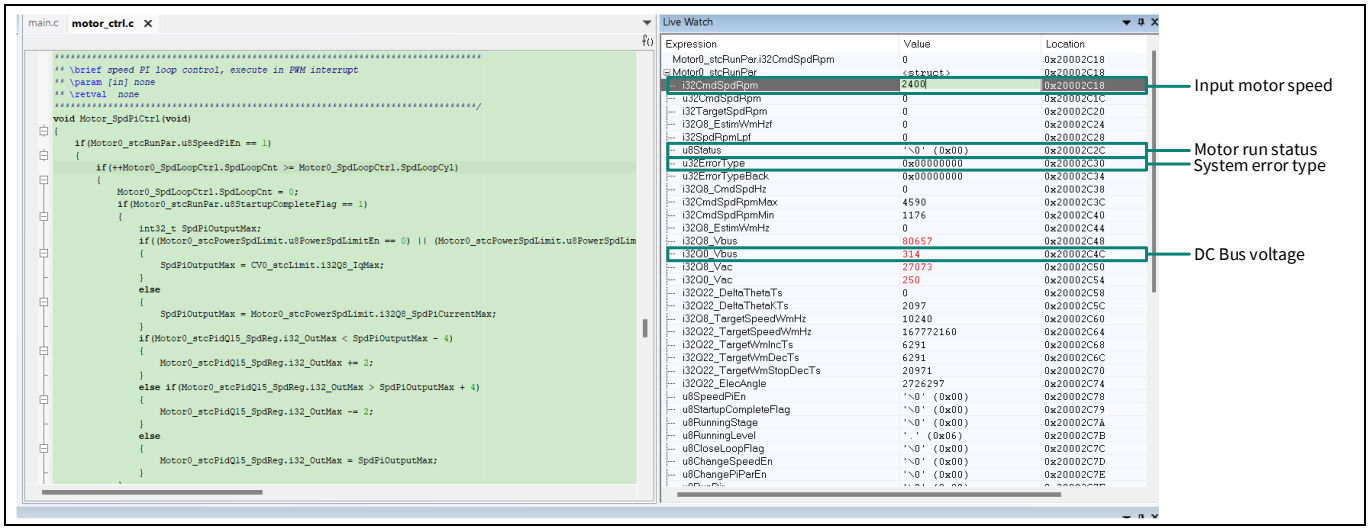

Figure 14 Run motor

4 Resources

4.1 Schematic of REF-MHA0K3IRC2PSOC4

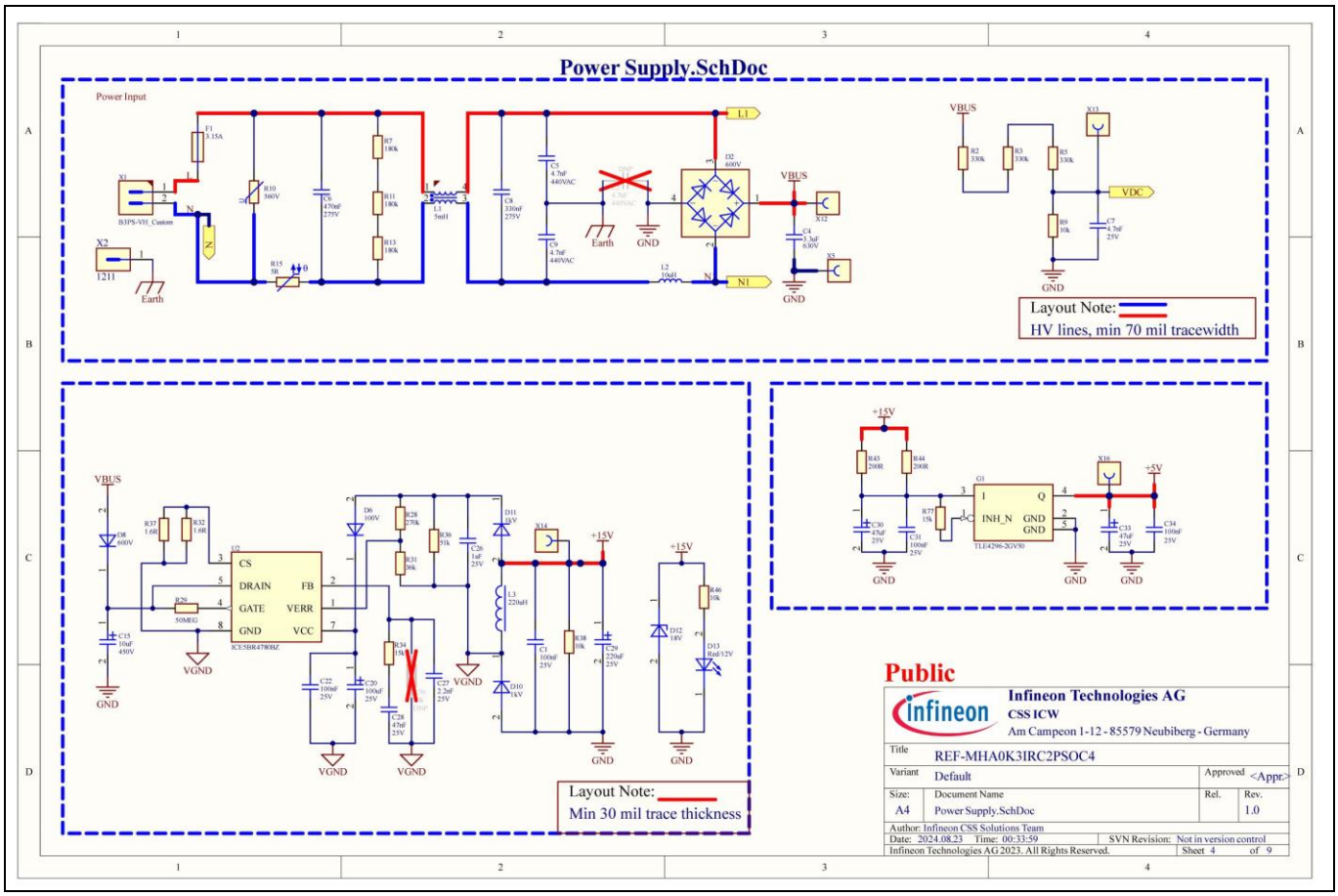

Figure 15 Power supply for the REF-MHA0K3IRC2PSOC4 board

4 Resources

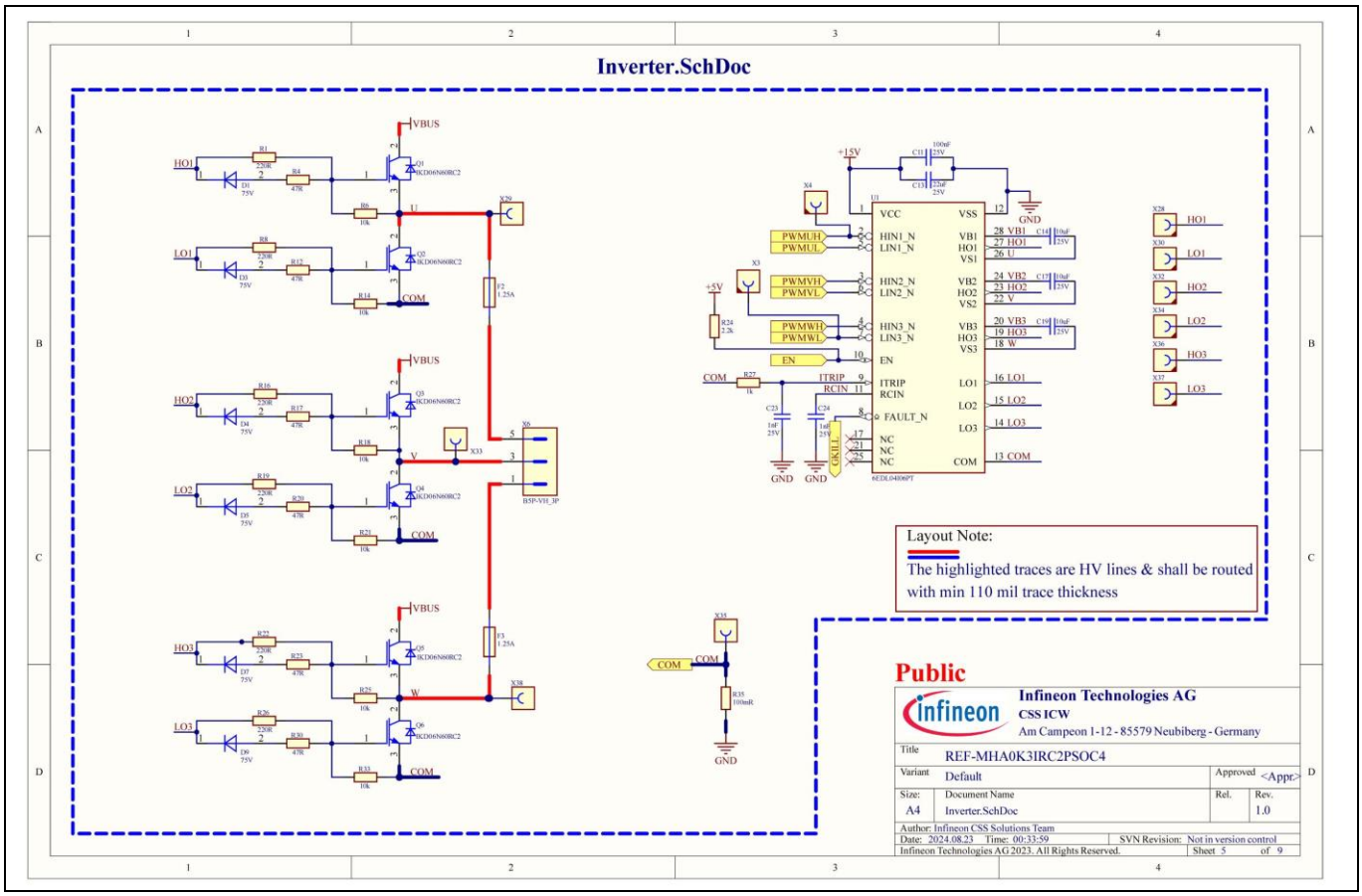

Figure 16 Inverter section of the REF-MHA0K3IRC2PSOC4 board

4 Resources

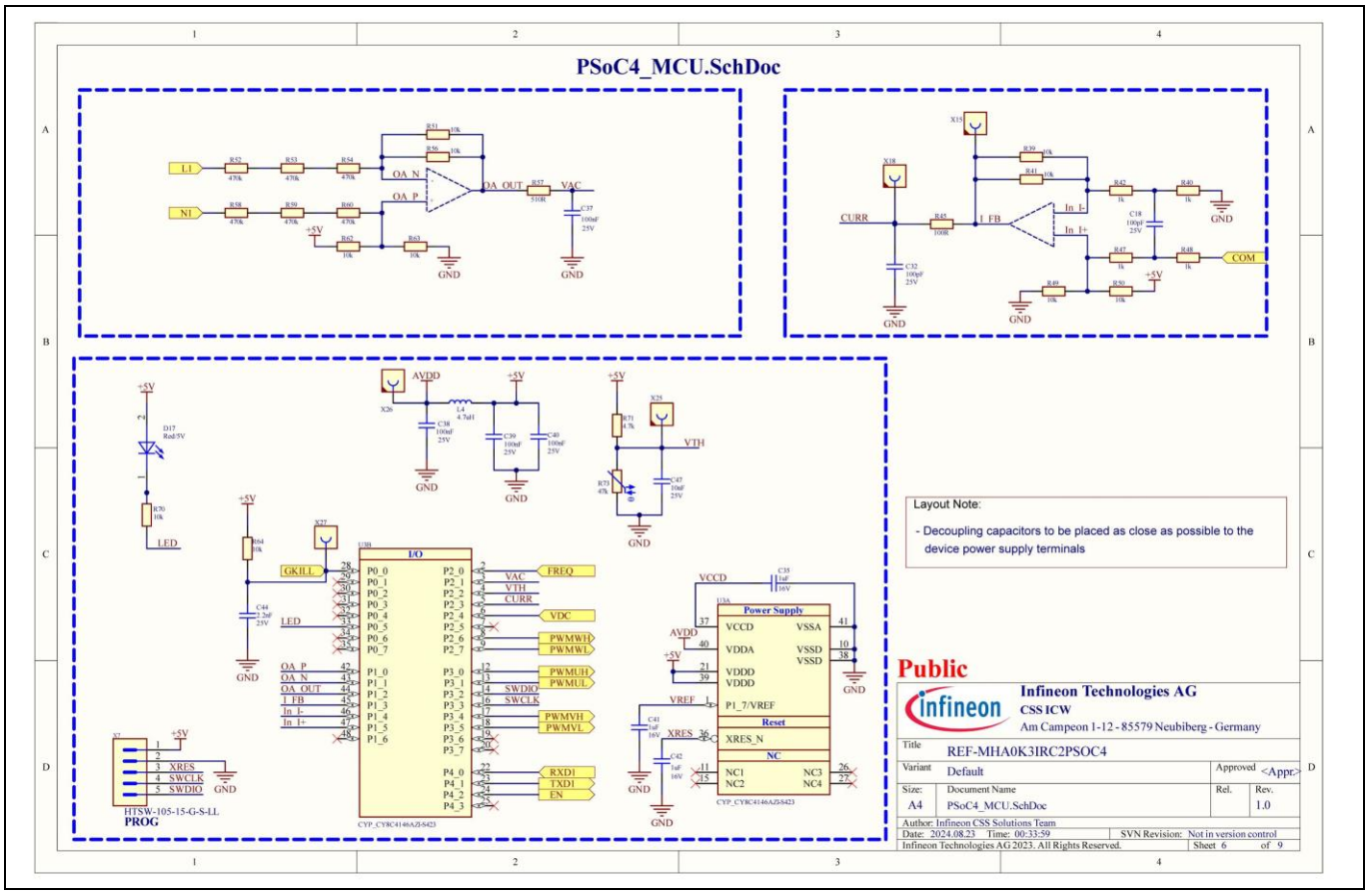

Figure 17 Microcontroller and measurement section for the REF-MHA0K3IRC2PSOC4 board

4 Resources

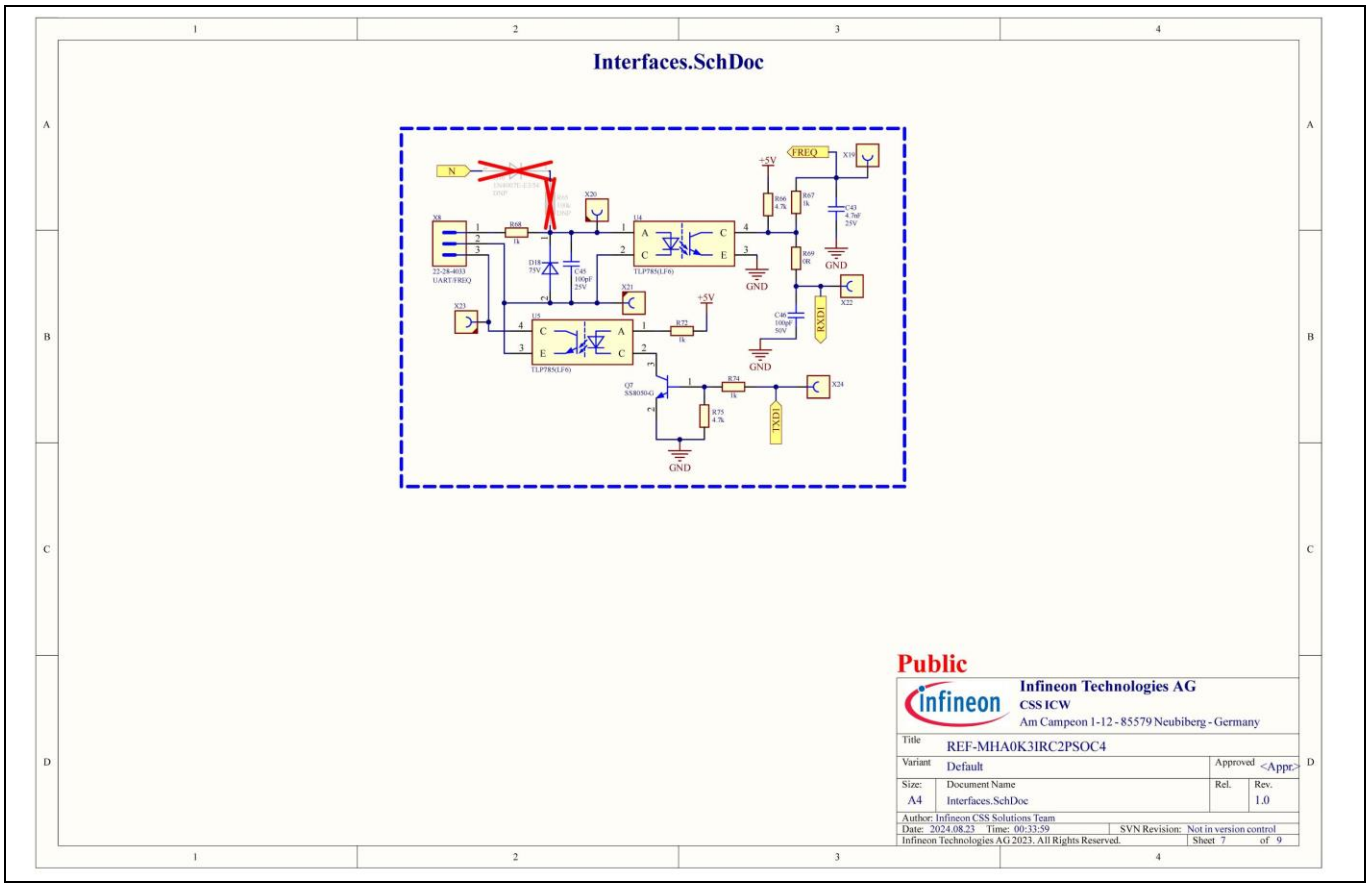

Figure 18 Isolated communication section for the REF-MHA0K3IRC2PSOC4 board

Glossary

Glossary

AC
Alternating Current

ADC
Analog-to-Digital Converter

CPU
Central Processing Unit

DC
Direct Current

FOC
Field oriented Control

IDE
Integrated Development Environment

IGBT
Insulated Gate Bipolar Transistor

LDO
Low Dropout (a type of regulator)

MCU
Microcontroller Unit

PWM
Pulse Width Modulation

SRAM
Static Random Access Memory

SAR
Successive Approximation Register

USB
Universal Serial Bus

Glossary

SWD
Serial Wire Debug (debugging interface)

Revision history

Document revision	Date	Description of changes
**	2024-10-15	Initial release

Trademarks
All referenced product or service names and trademarks are the property of their respective owners.

Edition 2024-10-15

Published by

Infineon Technologies AG

81726 Munich, Germany

© 2024 Infineon Technologies AG. All Rights Reserved.

Do you have a question about this document?

Email:

erratum@infineon.com

Document reference

002-40428 Rev. **

Important notice

The information given in this document shall in no event be regarded as a guarantee of conditions or characteristics (“Beschaffenheitsgarantie”).

With respect to any examples, hints or any typical values stated herein and/or any information regarding the application of the product, Infineon Technologies hereby disclaims any and all warranties and liabilities of any kind, including without limitation warranties of non-infringement of intellectual property rights of any third party.

In addition, any information given in this document is subject to customer’s compliance with its obligations stated in this document and any applicable legal requirements, norms and standards concerning customer’s products and any use of the product of Infineon Technologies in customer’s applications.

The data contained in this document is exclusively intended for technically trained staff. It is the responsibility of customer’s technical departments to evaluate the suitability of the product for the intended application and the completeness of the product information given in this document with respect to such application.

Warnings

Due to technical requirements products may contain dangerous substances. For information on the types in question please contact your nearest Infineon Technologies office.

Except as otherwise explicitly approved by Infineon Technologies in a written document signed by authorized representatives of Infineon Technologies, Infineon Technologies’ products may not be used in any applications where a failure of the product or any consequences of the use thereof can reasonably be expected to result in personal injury.