QUICK START GUIDE

EZ-USB™ FX20 Development Kit

KIT_FX20_FMC_001

Kit contents

1. EZ-USB™ FX20 DVK
2. USB-C cable
3. Quick start guide (this document)

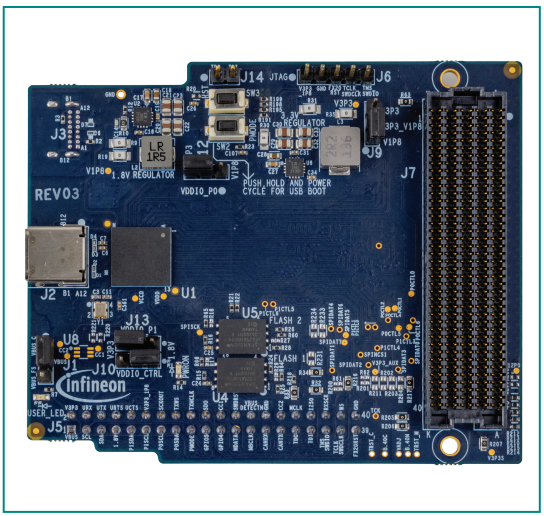

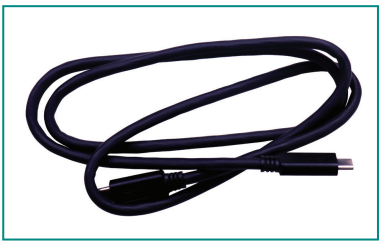



www.infineon.com/FX20

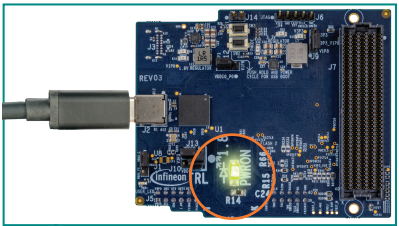

1 | Kit connected to PC via USB-C cable and power on LED glows green

Before you start

1. Ensure that you have a PC with USB-C port that supports USB 3.2 Gen 2x2 data transfer. You can also use the kit with USB 3.2 Gen 2 or USB 3.2 Gen 1 ports. The frame rate of the video will be reduced when used with these USB ports.
2. Ensure that the jumpers are set to the following:

Jumper	Position
J1	1-2
J9	1-2
J10	1-2
J12	2-3
J13	2-3

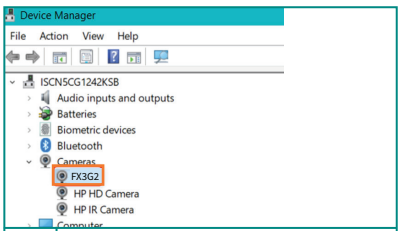

2 | Board enumerates as FX3G2 device in Windows Device Manager

Step 1: Connect and power up the board

Connect the kit connector (J2) to the PC using the USB-C cable provided with the kit. The power on LED glows green when connected.

Step 2: EZ-USB™ FX20 enumeration

Driver installation starts automatically, wait for the driver installation to complete. The board enumerates as **FX3G2** device under Cameras in **Windows** ->**Device Manager** application.

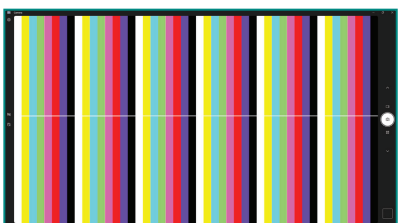

3 | Streaming colorbar in “Microsoft Windows camera” application

Step 3: Stream UVC video from FX20

The kit comes pre-loaded with internal pattern generator firmware, enabling users to stream a 4K colorbar video from FX20 to any UVC streaming application.

1. Open any UVC video player, such as **Microsoft Windows camera** application in Windows.
2. Click the flip camera button.
   The 4K colorbar streams at around 120fps on the video player.

For more details, refer the kit user guide.

KIT_FX20_FMC_001 (top view)

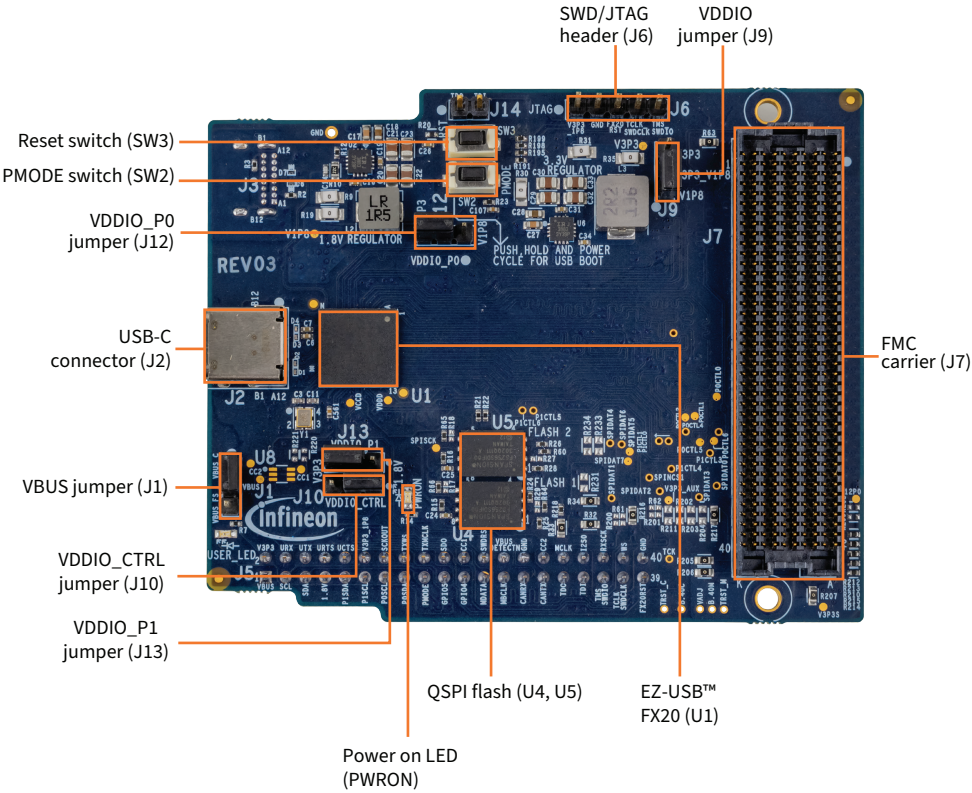

KIT_FX20_FMC_001 (bottom view)

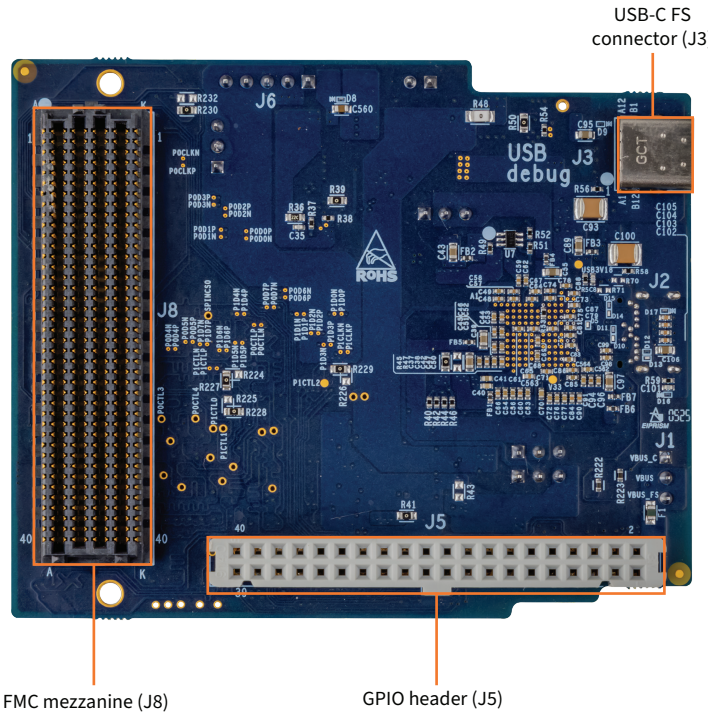

See the kit guide available at www.infineon.com/FX20 for more details.

Document number: 002-40085 Rev. *C
Date: 03/2025

Published by Infineon Technologies AG
81726 Munich, Germany

All rights reserved. © 2025
Infineon Technologies AG