Release Notes

CY3250 QFN POD Kits

Release Date: December 11, 2009

Thank you for your interest in this CY3250 QFN Emulation POD Kit. This document lists known issues with this family of kits.

Kit Overview

Emulation PODs are designed to connect to the In-Circuit Emulator (CY3215-DK) to allow debugging capability. They can also function as a standalone device without debugging capability. The Emulation POD has a unique interface on the bottom side for connecting with specially designed "feet" boards. The feet can be soldered to the target board in place of the device being emulated.

Known Issues and Workarounds

The following table captures the known issues with the CY3250 QFN style emulation POD kits.

Items	Affected Items	Revision	Workaround/Fix Status
1. Strain relief standoff screws may be difficult to screw in by hand.	QFN Emulation PODs (All)	ALL	Customers can purchase a 0.050" size hex key from McMaster-Carr© website http://www.mcmaster.com/ with a part number of ***7122A13***

1. Strain relief standoff screws may be difficult to screw in by hand.

- **PROBLEM DEFINITION**
  Some strain relief standoff screws may be difficult to screw into the strain relief inserts by hand. Therefore, a 0.050" hex key tool may be required to fully insert the standoff screw.

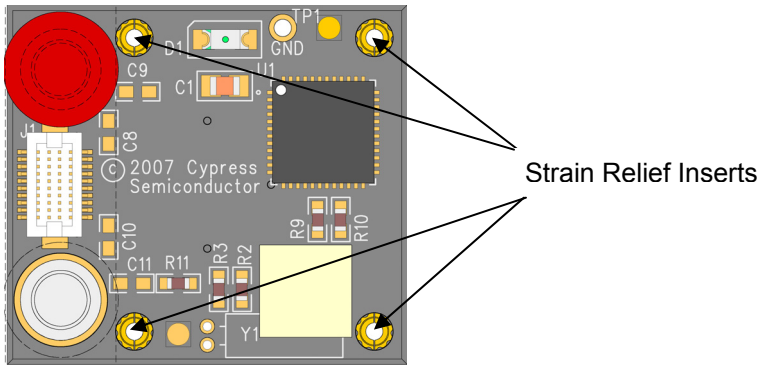

[+] Feedback

- **SCOPE OF IMPACT**
  Users of the strain relief standoff screws included with QFN style PODs.
- **WORKAROUND/FIX**
  Customers can purchase a 0.050” size hex key from McMaster-Carr© by visiting their website at http://www.mcmaster.com/ with part number ***7122A13.***

Cypress Semiconductor
198 Champion Ct.
San Jose, CA 95134-1709 USA
Tel: 408.943.2600
Fax: 408.943.4730
Application Support Hotline: 425.787.4814
www.cypress.com

© Cypress Semiconductor Corporation, 2009. The information contained herein is subject to change without notice. Cypress Semiconductor Corporation assumes no responsibility for the use of any circuitry other than circuitry embodied in a Cypress product. Nor does it convey or imply any license under patent or other rights. Cypress products are not warranted nor intended to be used for medical, life support, life saving, critical control or safety applications, unless pursuant to an express written agreement with Cypress. Furthermore, Cypress does not authorize its products for use as critical components in life-support systems where a malfunction or failure may reasonably be expected to result in significant injury to the user. The inclusion of Cypress products in life-support systems application implies that the manufacturer assumes all risk of such use and in doing so indemnifies Cypress against all charges.

Programmable System-on-Chip™, and PSoC Creator™ are trademarks and PSoC® is a registered trademark of Cypress Semiconductor Corp. All other trademarks or registered trademarks referenced herein are property of the respective corporations.

Disclaimer: CYPRESS MAKES NO WARRANTY OF ANY KIND, EXPRESS OR IMPLIED, WITH REGARD TO THIS MATERIAL, INCLUDING, BUT NOT LIMITED TO, THE IMPLIED WARRANTIES OF MERCHANTABILITY AND FITNESS FOR A PARTICULAR PURPOSE. Cypress reserves the right to make changes without further notice to the materials described herein. Cypress does not assume any liability arising out of the application or use of any product or circuit described herein. Cypress does not authorize its products for use as critical components in life-support systems where a malfunction or failure may reasonably be expected to result in significant injury to the user. The inclusion of Cypress’ product in a life-support systems application implies that the manufacturer assumes all risk of such use and in doing so indemnifies Cypress against all charges.

Use may be limited by and subject to the applicable Cypress software license agreement.

[+] Feedback