CY8CKIT-014

PSoC® 5 FirstTouch™ Starter Kit Guide

Spec. # 001-57708 Rev. *A

Cypress Semiconductor
198 Champion Court
San Jose, CA 95134-1709
Phone (USA): 800.858.1810
Phone (Intnl): 408.943.2600
http://www.cypress.com

Copyrights

© Cypress Semiconductor Corporation, 2011. The information contained herein is subject to change without notice. Cypress Semiconductor Corporation assumes no responsibility for the use of any circuitry other than circuitry embodied in a Cypress product. Nor does it convey or imply any license under patent or other rights. Cypress products are not warranted nor intended to be used for medical, life support, life saving, critical control or safety applications, unless pursuant to an express written agreement with Cypress. Furthermore, Cypress does not authorize its products for use as critical components in life-support systems where a malfunction or failure may reasonably be expected to result in significant injury to the user. The inclusion of Cypress products in life-support systems application implies that the manufacturer assumes all risk of such use and in doing so indemnifies Cypress against all charges.

Any Source Code (software and/or firmware) is owned by Cypress Semiconductor Corporation (Cypress) and is protected by and subject to worldwide patent protection (United States and foreign), United States copyright laws and international treaty provisions. Cypress hereby grants to licensee a personal, non-exclusive, non-transferable license to copy, use, modify, create derivative works of, and compile the Cypress Source Code and derivative works for the sole purpose of creating custom software and or firmware in support of licensee product to be used only in conjunction with a Cypress integrated circuit as specified in the applicable agreement. Any reproduction, modification, translation, compilation, or representation of this Source Code except as specified above is prohibited without the express written permission of Cypress.

Disclaimer: CYPRESS MAKES NO WARRANTY OF ANY KIND, EXPRESS OR IMPLIED, WITH REGARD TO THIS MATERIAL, INCLUDING, BUT NOT LIMITED TO, THE IMPLIED WARRANTIES OF MERCHANTABILITY AND FITNESS FOR A PARTICULAR PURPOSE. Cypress reserves the right to make changes without further notice to the materials described herein. Cypress does not assume any liability arising out of the application or use of any product or circuit described herein. Cypress does not authorize its products for use as critical components in life-support systems where a malfunction or failure may reasonably be expected to result in significant injury to the user. The inclusion of Cypress' product in a life-support systems application implies that the manufacturer assumes all risk of such use and in doing so indemnifies Cypress against all charges.

Use may be limited by and subject to the applicable Cypress software license agreement.

PSoC Designer™, and Programmable System-on-Chip™ are trademarks and PSoC® is a registered trademark of Cypress Semiconductor Corp. All other trademarks or registered trademarks referenced herein are property of the respective corporations.

Flash Code Protection

Cypress products meet the specifications contained in their particular Cypress PSoC Data Sheets. Cypress believes that its family of PSoC products is one of the most secure families of its kind on the market today, regardless of how they are used. There may be methods, unknown to Cypress, that can breach the code protection features. Any of these methods, to our knowledge, would be dishonest and possibly illegal. Neither Cypress nor any other semiconductor manufacturer can guarantee the security of their code. Code protection does not mean that we are guaranteeing the product as "unbreakable."

Cypress is willing to work with the customer who is concerned about the integrity of their code. Code protection is constantly evolving. We at Cypress are committed to continuously improving the code protection features of our products.

Contents

1. Introduction **5**

1.1 Welcome 5
1.2 Kit Contents 5
1.3 Document Revision History 6
1.4 Documentation Conventions 6

2. Getting Started **7**

2.1 Hardware 7

3. Installation **9**

3.1 Install Hardware 9
3.1.1 Hardware Jumpers 9
3.2 Install Software 10

4. Example Projects **13**

4.1 PSoC Rocks, PSoC Rocks SAR ADC 13
4.1.1 Open the PSoC Rocks Project 13
4.1.2 Modify the PSoC Rocks Project 14
4.1.3 Build, Program, and Run the PSoC Rocks Project 14
4.1.4 Open and Modify the PSoC Rocks SAR ADC Project 15
4.1.5 Schematic Design PSoC Creator 15
4.1.6 How the PSoC Rocks and PSoC Rocks SAR ADC Projects Work 17
4.1.7 PCB Schematic 19
4.2 Bubble Level Emulator 20
4.2.1 How the Bubble Level Emulator Project Works 21
4.2.2 PCB Schematic 22
4.3 ThermistorTemperatureSense 23
4.3.1 How the ThermistorTemperatureSense Project Works 23
4.3.1.1 Temperature Sensing Design Principle 24
4.3.2 PCB Schematic 25
4.4 CapSense Slider 26
4.4.1 How the CapSense Slider Project Works 26
4.4.2 PCB Schematic 28
4.5 Proximity Sensor 29
4.5.1 How the Proximity Sensor Project Works 30
4.5.2 PCB Schematic 31

5. Technical Reference **33**

5.1 PSoC 5 FirstTouch Starter Kit Schematic 34
5.1.1 Hardware Jumpers 35
5.1.2 Board Layout 36
5.1.3 Bill of Material (BOM) 38
5.2 PSoC 5 Pin Assignment on PSoC 5 FirstTouch Starter Kit Board 41

1. Introduction

1.1 Welcome

Thank you for purchasing the CY8CKIT-014 PSoC® 5 FirstTouch™ Starter Kit.

The PSoC 5 FirstTouch Starter Kit is designed to introduce you to the PSoC programmable system-on-chip design methodology and Cypress's new PSoC 5 architecture. This full-featured starter kit ships with an array of sensors, I/O's, projects and software to quickly get you up to speed with PSoC Creator and our powerful design methodology so you can easily evaluate PSoC and see what values the solution can provide you.

This kit, in addition to our new PSoC 5 architecture, features the following:

- PSoC Creator development software with an integrated, GCC compiler version 4.2.1
- USB-based Serial Wire Debugging protocol programmer and debug interface
- Accelerometer analog sensor
- Thermistor analog sensor
- Proximity analog sensor
- CapSense® analog touch-sensing interface
- 28-pin general purpose I/O pins
- 12-pin wireless module header

In this guide you will find instructions on how to easily evaluate the PSoC 5 architecture and PSoC Creator design methodology through five included example projects. Experience the development software for yourself and discover how we truly have changed the way you change the world!

If you have questions about or need help with this kit, visit our online technical support center at http://www.cypress.com/go/support for support options, or contact your local Cypress sales representative or authorized distributor.

1.2 Kit Contents

PSoC 5 FirstTouch Starter Kit contains:

- Evaluation Board
- Quick Start Guide
- Kit CD
- USB A to Mini B cable
- Proximity wire (for use as proximity detection antenna)
- 9V battery

1.3 Document Revision History

Table 1-1. Revision History

Revision	PDF Creation Date	Origin of Change	Description of Change
**	05/17/10	SSUT	New kit guide.
*A	01/05/11	SSUT	Updated PSoC Programmer version. Changed Figure 3-4, Figure 3-5, and Figure 4-1.

1.4 Documentation Conventions

Table 1-2. Document Conventions for Guides

Convention	Usage
`Courier New`	Displays file locations, user entered text, and source code: `C:\ ...cd\icc\`
Italics	Displays file names and reference documentation: Read about the *sourcefile.hex* file in the *PSoC Designer User Guide*.
[**Bracketed, Bold**]	Displays keyboard commands in procedures: [**Enter**] or [**Ctrl**] [**C**]
File > Open	Represents menu paths: File > Open > New Project
Bold	Displays commands, menu paths, and icon names in procedures: Click the **File** icon and then click **Open**.
Times New Roman	Displays an equation: 2 + 2 = 4
Text in gray boxes	Describes Cautions or unique functionality of the product.

2. Getting Started

2.1 Hardware

The PSoC 5 FirstTouch Starter Kit contains these components and sensors.

Figure 2-1. PSoC 5 FirstTouch Starter Kit

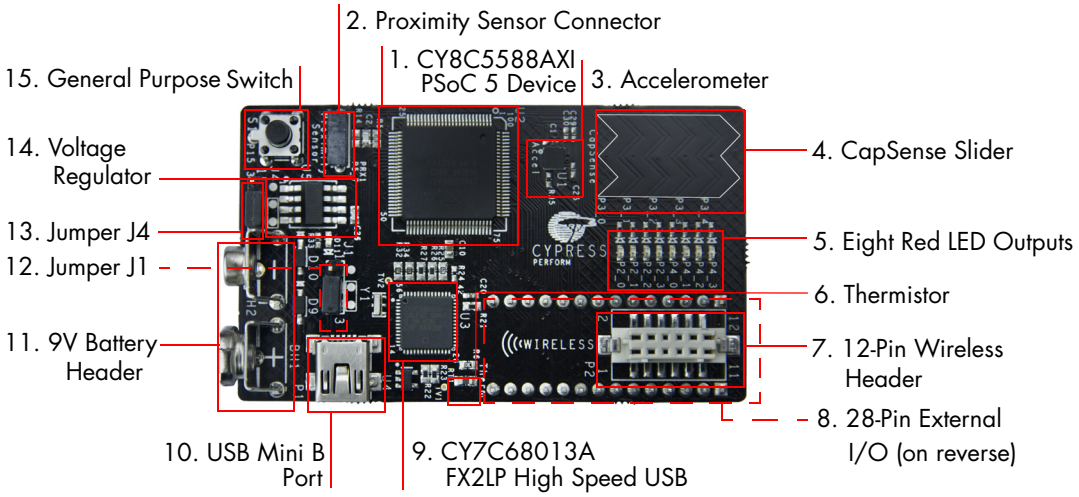

The components indicated in Figure 2-1 are:

1. PSoC 5 100-pin TQFP(Cypress CY8C5588AXI-060 TQFP100)
2. Proximity Sensor Connector (Samtec Inc, BCS-101-L-S-HE)
3. Three Axis Accelerometer (Kionix, KXSC7-2050)
4. Five Segment CapSense Slider
5. Bank of Eight LEDs (Also referred to as LED Display in this user guide)
6. Thermistor (Murata, NCP21XV103J03RA)
7. Wireless Expansion Connector
8. General Purpose Expansion Connector (22 GPIO, 2 VDD, 2 GND, 2 SIO)
9. USB Programming and Debugging Interface (Cypress CY7C68013A-56LFXC)
10. USB Connector
11. 9V DC Battery Holder
12. Jumper J1 Vddio Power Source Select
13. Jumper J4 Voltage Regulator Source Select
14. Voltage Regulator (Zetex Inc, ZLDO330)
15. General Purpose Push Button Switch

3. Installation

3.1 Install Hardware

This section shows you how to use the PSoC 5 FirstTouch Starter Kit.

Note: This kit comes with a factory programmed demonstration to display "PSoC Rocks!" message on the LED display when the board is waved.

1. Unpack the PSoC 5 FirstTouch Starter Kit.
2. Connect a 9V DC battery to the battery connector on the kit board.
3. Hold the board and battery exposing the LEDs. Then continuously wave the board from side to side in the plane of the PCB (shown in Figure 3-1).
4. As you wave the board, the rasterized image of the message "PSoC Rocks!" appears as shown in the following figure.
5. Keep waving. The message changes every few seconds.

Figure 3-1. Rasterized Image of "PSoC Rocks!"

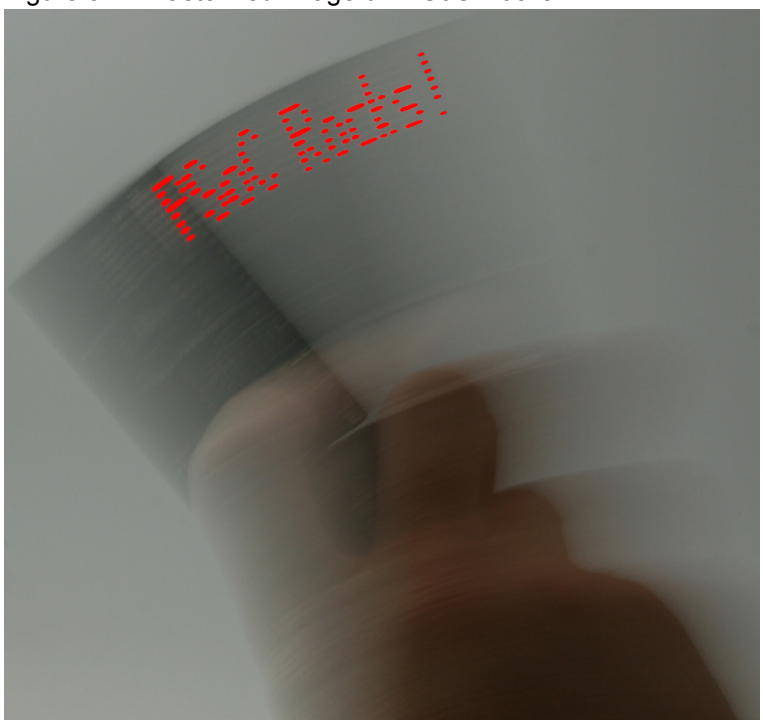

3.1.1 Hardware Jumpers

There are two jumpers for power configuration. All examples are run with the default setup of 3.3V operation. This requires J1-2 to connect to J1-3 and J4-2 to connect to J4-3. For all other configurations see section 5.1.1 Hardware Jumpers on page 36.

3.2 Install Software

When installing the PSoC 5 FirstTouch Starter Kit, the installer checks if the prerequisites, PSoC Creator, PSoC Programmer, Windows Installer, Windows.NET, Acrobat Reader, and GCC compiler version 4.2.1, are installed in your PC. If these applications are not installed, then the installer prompts you to install them.

1. Insert the Kit CD into the your PC. The CD is designed to automatically open an installation dialog (see Figure 3-3). If this does not automatically open, do manually open this by running the *cyautorun.exe* utility on the kit cd.

Figure 3-2. Auto Run File View

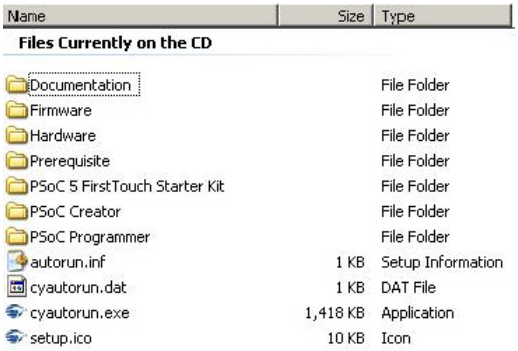

2. The kit cd's installation dialog prompts you to open this file or begin installing the development environment software. Click the **Install PSoC 5 FirstTouch Starter Kit** menu item to begin this installation.

Figure 3-3. Installation Dialog.



3. As specified, this installation process first determines if you have all prerequisite software. Follow the on-screen dialogs to complete all required installations. After following these steps, you must have the following software installed:
   a. PSoC Creator 1.0
   b. PSoC Programmer 3.12.3 or later
   c. GNU GCC Compiler (for PSoC 5 development)
   d. PSoC 5 FirstTouch Starter Kit example projects and documentation
4. Following the software installation, verify you have all hardware and drivers setup for the PSoC 5 FirstTouch Starter Kit by connecting the kit board to your PC via its USB interface. As this is the first time you have connected this board to this PC, initial driver installations occur. Should any on-screen dialogs appear, follow them to complete the installation process.

   Note After the installation is complete, the kit contents are found at the following location: `C:\Program Files\Cypress\PSoC 5 FirstTouch Starter Kit\`
5. Now, verify your installation and setup by opening PSoC Programmer with the kit board attached over USB. To open PSoC Programmer, click **Start** → **Programs** → **Cypress** → **PSoC Programmer 3.12.3** → **PSoC Programmer** (see Figure 3-4). In the port selection frame, you should see the PSoC 5 FirstTouch starter kit. If you do, you have successfully installed all required software and drivers to begin your PSoC 5 evaluation. Congratulations!

Figure 3-4. Opening PSoC Programmer

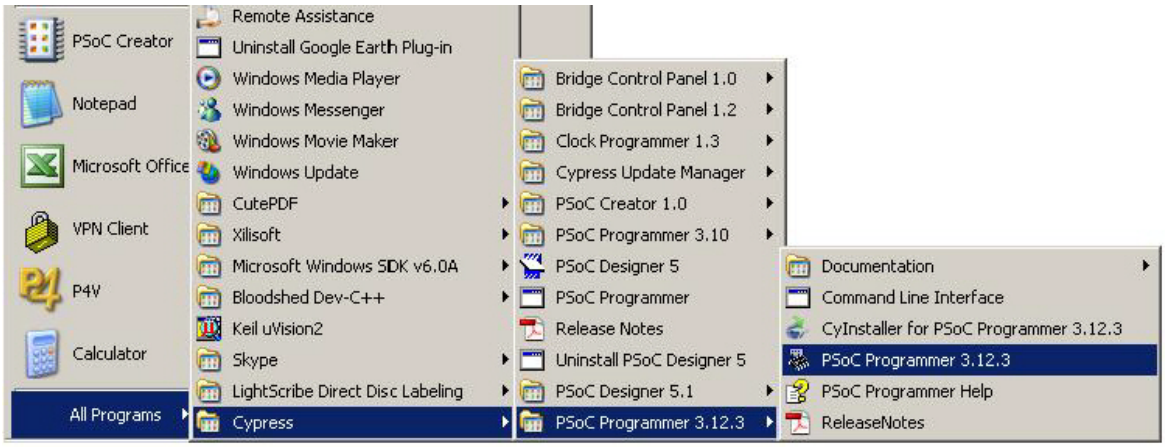

6. Close PSoC Programmer
7. Open PSoC Creator and continue on to the next section to experiment with the included example projects.

Figure 3-5. Opening PSoC Creator

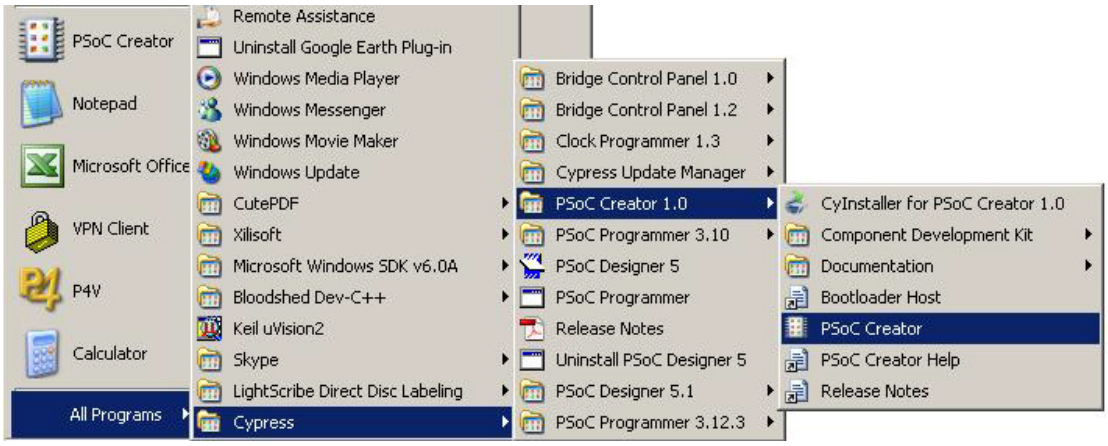

4. Example Projects

4.1 PSoC Rocks, PSoC Rocks SAR ADC

The PSoC Rocks project displays a rasterized image of the user defined message ("PSoC Rocks!") using persistence of vision. Waving the circuit board back and forth quickly in the plane of the board generates the message. PSoC 5 FirstTouch Starter Kit is factory programmed with PSoC Rocks SAR ADC project. This project is similar to PSoC Rocks project. The difference is PSoC Rocks SAR ADC project uses SAR ADC, and PSoC Rocks project uses Delta Sigma ADC

4.1.1 Open the PSoC Rocks Project

1. Click on the example project **PSoCRocks** from **Kits and Solutions** present on the start page of the PSoC Creator.
2. Make a folder in the desired location and click **OK**.
3. Project opens up in the PSoC Creator and gets saved in that folder.
4. Build the project to generate the *.hex* file.

Figure 4-1. Open PSoC Rocks from Kits and Solutions



4.1.2 Modify the PSoC Rocks Project

1. From the Workspace Explorer, open the *main.c* file as shown in Figure 4-2.
2. Replace the "PSoC Rocks!" string in the DisplayString[ ] [ ] array of strings with "Cypress" or any other message(s) desired up to 25 characters.

Figure 4-2. main.c File View

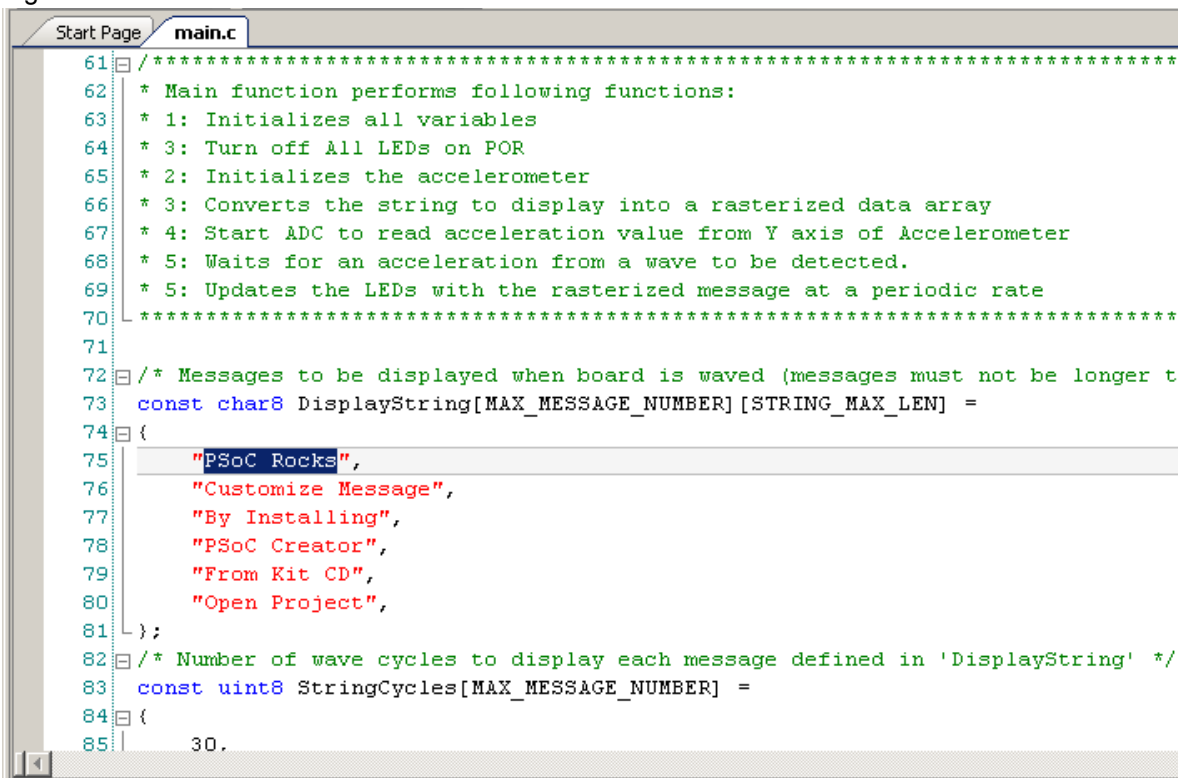

3. The number of times each string in the array is displayed can be adjusted by modifying the respective entry in the StringCycles[ ] array. Valid entries are 1-255.

4.1.3 Build, Program, and Run the PSoC Rocks Project

1. Build the project by selecting **Build** → **Build PSoCRocks**.

Figure 4-3. Build PSoCRocks

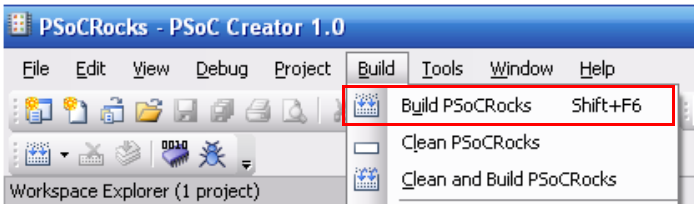

2. Connect the PSoC 5 FirstTouch Starter Kit board to your PC by using a USB cable.
3. Click the **Program** icon.

Figure 4-4. Program

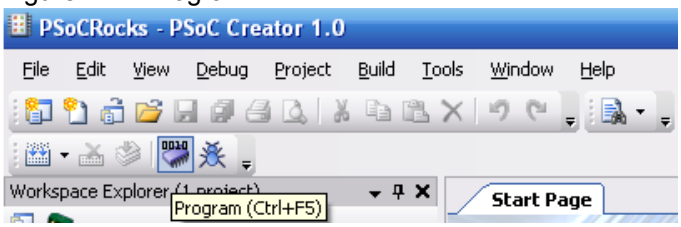

4. The project is programmed successfully as shown in Figure 4-5 on page 15.

Figure 4-5. Program Successful

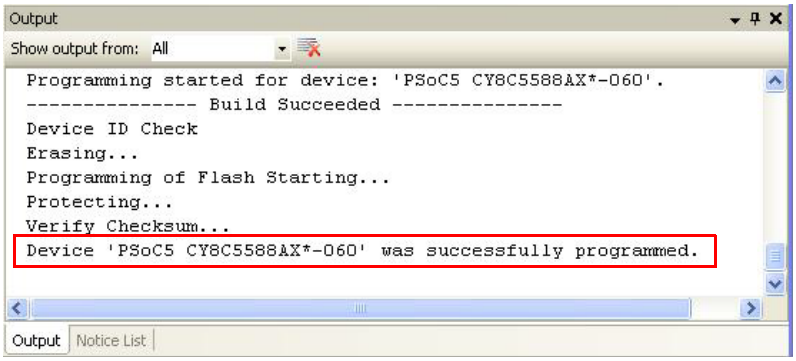

5. When the download is complete, remove the USB cable from the PSoC 5 FirstTouch Starter Kit board and connect a 9V battery to the battery connector.
6. Follow the steps in section 3.1 Install Hardware on page 9 to see your message displayed.

4.1.4 Open and Modify the PSoC Rocks SAR ADC Project

1. Click on the example project the **PSoCRocks SAR ADC** from **Kits and Solutions** present on the start page of the PSoC Creator.
2. Make a folder in the desired location and click OK.
3. Project opens up in the PSoC Creator and gets saved in that folder.
4. Follow steps 1 to 3 in Modify the PSoC Rocks Project on page 14 to modify the rasterized image.
5. Follow steps 1 to 6 in Build, Program, and Run the PSoC Rocks Project on page 14 to program the project into the PSoC 5 FirstTouch Starter Kit board and verify the output.

4.1.5 Schematic Design PSoC Creator

This project's customized hardware configuration is viewed by opening the *TopDesign.cysch* file located in the Workspace Explorer window. PSoC Creator's schematic design entry methodology, using pre-defined peripheral functions called components, allows rapid hardware definition and implementation.

The schematic entry system works similarly to standard circuit board schematic entry tools, with the exception that all components and routing are automatically implemented within the PSoC device rather than on a PCB. This allows you to create custom solutions using peripherals commonly found in MCU designs as well as analog peripherals, digital peripherals, and logic, not possible with any other microcontroller or System on Chip. In many designs, traditionally external resources are able to be fully integrated within the PSoC device.

The PSoC Rocks design schematic uses several peripheral and circuit elements. A single analog input pin connected to the accelerometer's Y axis is routed to an SAR ADC. A pin component with 3

pins is used to control the functionality of the accelerometer and another pair is used to drive the LEDs. The last schematic element is a control register that is used to drive the LED pins. The control register output is inverted to sink current from the LEDs. This allows the LEDs to be driven externally with the highest possible current and brightness without adding complexity to the design. Conventional systems would require firmware overhead to decode and invert the data for each of the affected LED pins.

The PSoC Rocks schematic (see Figure 4-6 on page 16) provides a small sample of how custom hardware and peripherals are possible in PSoC devices. Each component selected from the component catalog and placed onto the project schematic provides a GUI, configurable parameters, and full data sheet to further customize its operation in the design. During the project build process, each component generates the required hardware configuration and firmware APIs as necessary to provide a truly custom hardware configuration.

Figure 4-6. PSoC Rocks Schematic

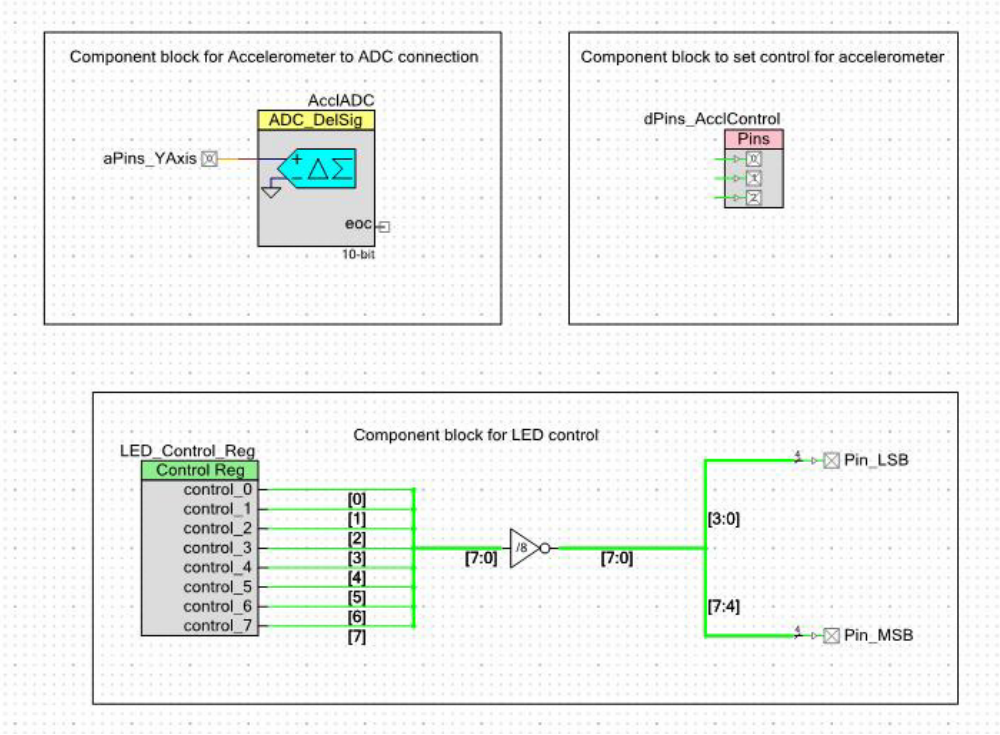

Figure 4-7. PSoC Rocks SAR ADC Schematic

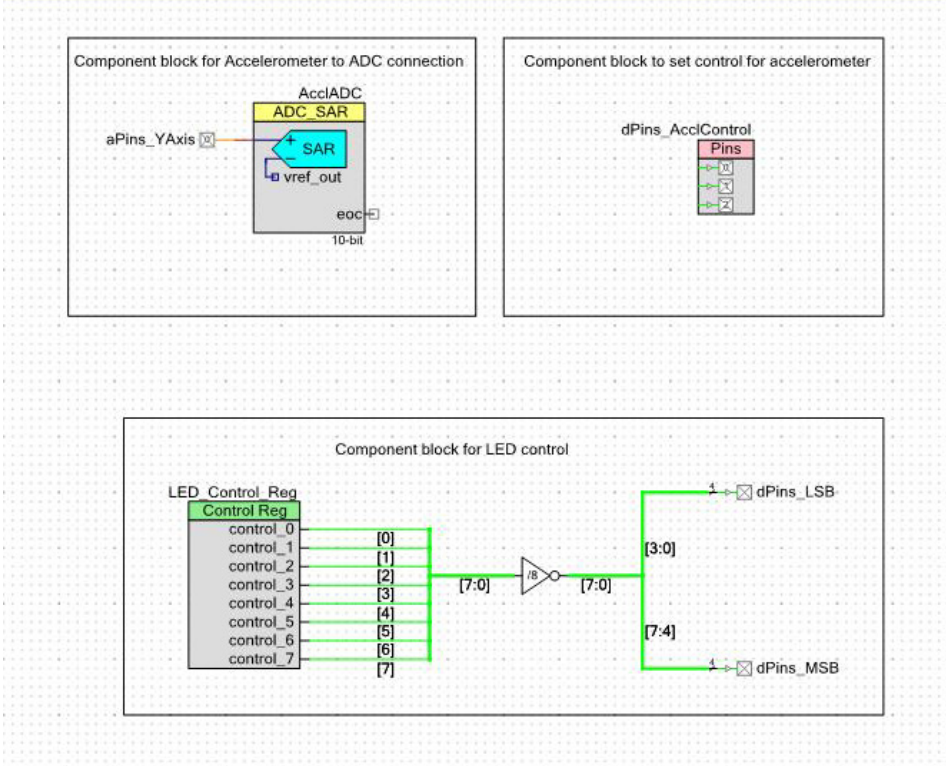

4.1.6 How the PSoC Rocks and PSoC Rocks SAR ADC Projects Work

This example displays a message using a bank of LEDs, that when swung in a back and forth arcing motion, produces a rasterized character display. The PSoC 5 FirstTouch Starter Kit has a three axis accelerometer. The accelerometer detects the instantaneous acceleration of the board when in motion. The instantaneous voltage at each axis of the accelerometer is directly proportional to the acceleration along that axis.

In this project, the firmware uses the Y axis voltage output of the accelerometer. This voltage is routed to an ADC in the PSoC. This digital value is now a measure of acceleration detected by the accelerometer. If the acceleration exceeds a maximum value it signals the start of a new wave event. On start of a new wave the firmware delays for a fixed period of time to start the first character in the proper position of the wave. The current string is converted into a rasterized display data array prior to the start of the wave. Each column of the rasterized data array is sequentially output after a fixed delay. The delay periods may be adjusted in firmware.

For a particular character in the message, a look up table determines which LEDs to turn on. When the board is waved back and forth rapidly, due to persistence of vision, the user defined image appears to float in the air. Multiple strings may be configured with each string being displayed for an adjustable number of wave cycles.

Figure 4-8. PSoC Rocks and PSoC Rocks SAR ADC Projects Flowchart

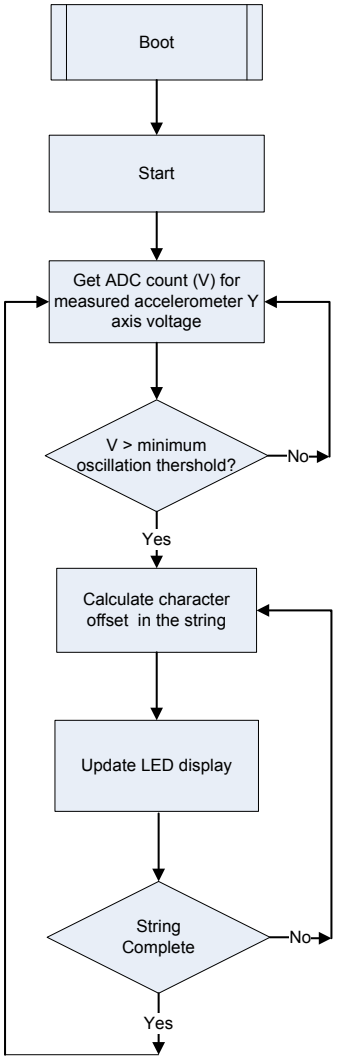

4.1.7 PCB Schematic

Figure 4-9. PSoC Rocks and PSoC Rocks SAR ADC Projects PCB Schematic

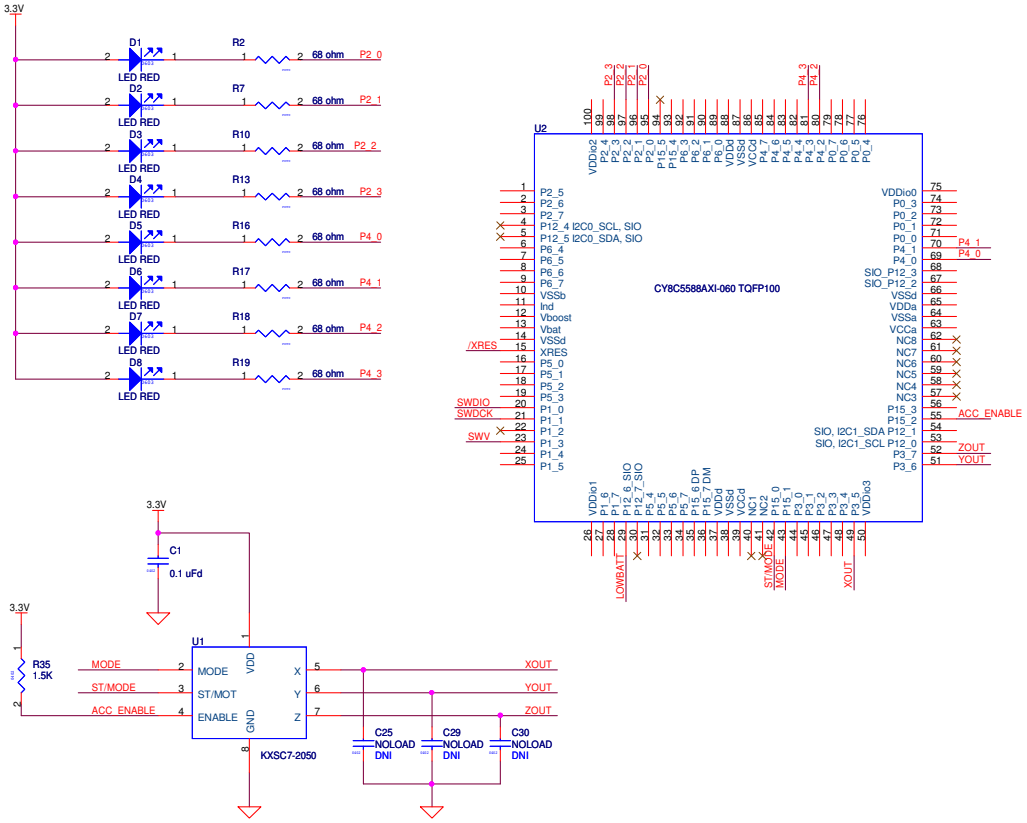

4.2 Bubble Level Emulator

This project emulates a glass bubble level instrument using the onboard accelerometer and the LED display. When the program is run, the LEDs shows the direction in which the board is tilted.

Running the Bubble Level Emulator project:

1. Connect the PSoC 5 FirstTouch Starter Kit board to the USB port of the PC using the USB cable.
2. Click on the example project BubbleLevel from **Kits and Solutions** present on the Startup page of the PSoC Creator.
3. Make a folder in the desired location and click **OK**.
4. Project opens up in the PSoC Creator and gets saved in that folder.
5. Follow step 1 to 4 in section 4.1.3 Build, Program, and Run the PSoC Rocks Project on page 14 to program the project into the PSoC 5 FirstTouch Starter Kit board.
6. When the download is complete, remove the PSoC 5 FirstTouch Starter Kit board from the USB port and connect a 9V DC battery to the battery connector of the PSoC 5 FirstTouch Starter Kit board.
7. Tilt the board along the X axis of the accelerometer by holding the battery in a stationary position and move the edge opposite the battery up and down as shown in Figure 4-10. As you tilt the board, you could see the direction of the tilt on the LED display.

Figure 4-10. Bubble Level Emulator - Perpendicular Motion

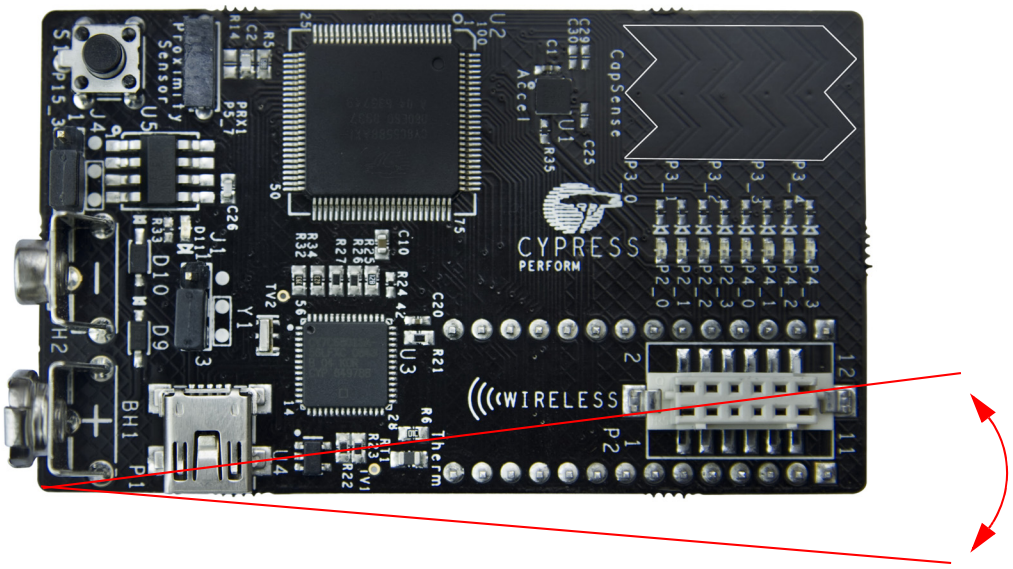

4.2.1 How the Bubble Level Emulator Project Works

A bubble level displays the amount the level deviates from horizontal using a bubble of air in a glass via level. In this project, a level is emulated by the accelerometer on the board.

In the case of the bubble level detection, LEDs display the tilt of the board along its length (corresponding to the X axis of the accelerometer).

The accelerometer is always under the influence of gravity. When the board is placed flat on the ground, the static acceleration due to gravity along the X axis of the accelerometer is zero. In this position of the board, the two LEDs in the center of the LED display are turned on. As the board is tilted in one direction, the force of gravity along that axis increases. This increases the static acceleration detected by the accelerometer. The X axis voltage output of the accelerometer is fed into an ADC in the PSoC. The ADC converts this voltage into digital count, which is the measure of the static acceleration detected by the accelerometer. PSoC determines the tilt of the board and lights up LEDs indicating the tilt. If the board is further tilted in one direction, the LED accordingly keeps moving to the extreme of the LED display.

Figure 4-11. Bubble Level Emulator Project Flowchart

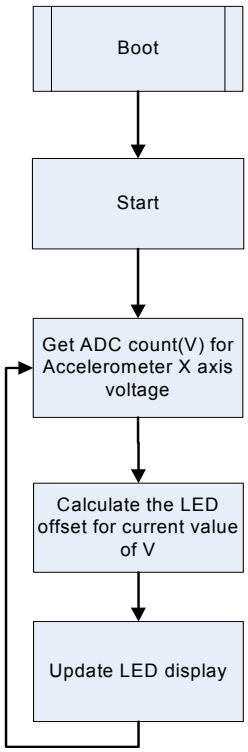

4.2.2 PCB Schematic

Figure 4-12. Bubble Level Emulator Project PCB Schematic

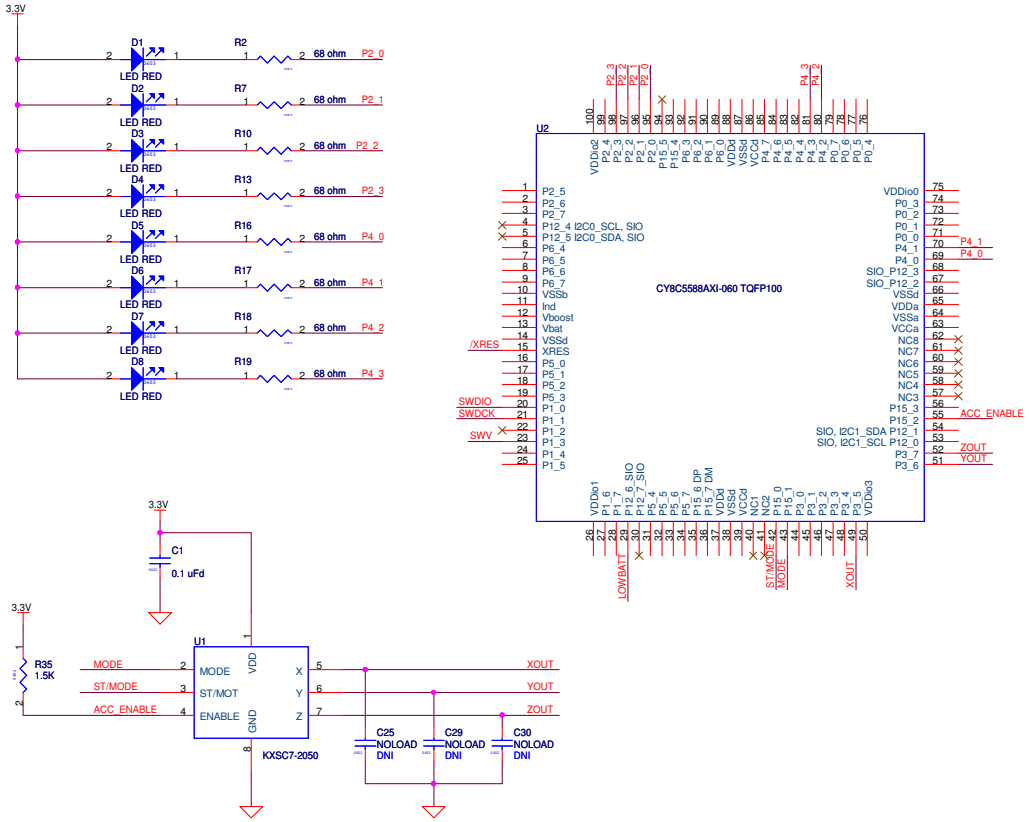

4.3 ThermistorTemperatureSense

This project measures the current room temperature and displays it as a rasterized image when the board is waved.

Running the ThermistorTemperatureSense project:

1. Connect the PSoC 5 FirstTouch Starter Kit board to the USB port of the PC through the USB cable.
2. Click on the example project ThemistorTemperatureSense from **Kits and Solutions** present on the Startup page of the PSoC Creator.
3. Make a folder in the desired location and click **OK**.
4. Project opens up in PSoC Creator and gets saved in that folder.
5. Follow step 1 to 4 in section 4.1.3 Build, Program, and Run the PSoC Rocks Project on page 14 to program the project into the PSoC 5 FirstTouch Starter Kit board.
6. When the download is complete, remove the PSoC 5 FirstTouch Starter Kit board from the USB port and connect a 9V DC battery to the battery connector of the PSoC 5 FirstTouch Starter Kit board.
7. Hold the board and wave it continuously from left to right as shown in Figure 3-1 on page 9. A rasterized image of the current measured temperature in degree Celsius is visible in the air. Press the S1 switch and continue to wave the board. The display has switched from Celsius to Fahrenheit.

4.3.1 How the ThermistorTemperatureSense Project Works

The thermistor example demonstrates how the PSoC device senses temperature using a thermistor. The thermistor resistance varies with temperature following a predictable nonlinear curve. The temperature-resistance relationship is given by the Steinhart-Hart equation:

$$1/T_k = A + B*\ln(R) + C*(\ln(R))^3$$

In this equation:

- A, B, and C are empirical constants known as Steinhart-Hart coefficients.
- R is the resistance of the thermistor in Ohms.
- T_k is the temperature in degree Kelvins.

The same equation, when converted to Celsius scale becomes:

$$T_c = T_k - 273.15$$

In this equation, T_c is the temperature in degree Celsius.

Figure 4-13. Temperature Sensor Project Flowchart

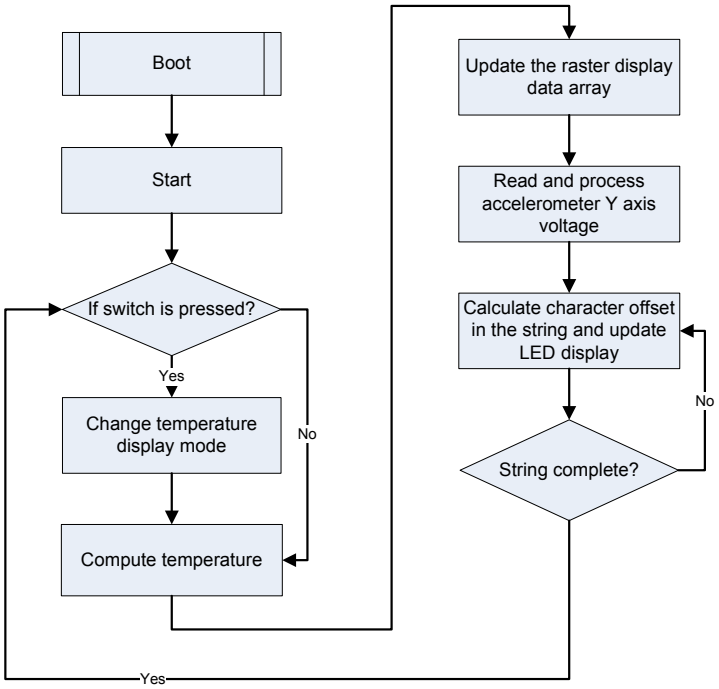

4.3.1.1 *Temperature Sensing Design Principle*

As shown in Figure 4-14, the design for temperature sensing uses a voltage divider with a precision resistor on one side and the thermistor on the other to estimate the thermistor resistance. The temperature calculations are as accurate as the resistance measurement of the thermistor.

Figure 4-14. Temperature Sensing Design Principle

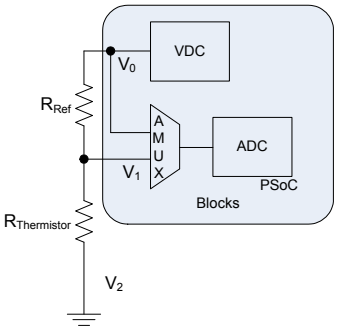

This setup significantly removes gain and offset errors from the resistance calculation.

The analog voltage output from the divider is converted to a digital signal using the ADC on the PSoC. To gain additional accuracy, the voltage at the input side of the divider is also measured. The resistor value is calculated using the ratio of the voltages across the two resistors in the resistor ladder.

$$\text{Rthermistor} = \text{Rref} * (V_1\text{-}V_2/V_0\text{-}V_1)$$

In this equation, V_2 = 0 (Ground voltage)

Offset errors, if any, are removed due to subtraction of the two measured voltages. The ratio of these two values removes the measurement path gain error. The error due to the reference resistor is reduced by using a precision resistance in series with the thermistor.

Temperature is calculated by referring to a table of 165 known points on the resistance/temperature curve using a look up table. The table holds resistance values of the thermistor from -40 °C to 125 °C, in 1 °C increments. Linear interpolation is used between the points in the table for temperature calculation up to two decimal places.

The temperature is then displayed as a rasterized image using persistence of vision when the board is waved around. Refer to section 4.1.6 How the PSoC Rocks and PSoC Rocks SAR ADC Projects Work on page 17 to understand how the message is displayed on the LEDs.

For more information on using PSoC family devices with a thermistor, refer to the application note AN2017 "Sensing - A Thermistor-Based Thermometer, PSoC Style".

4.3.2 PCB Schematic

Figure 4-15. PCB Schematic for Temperature Sensing Project

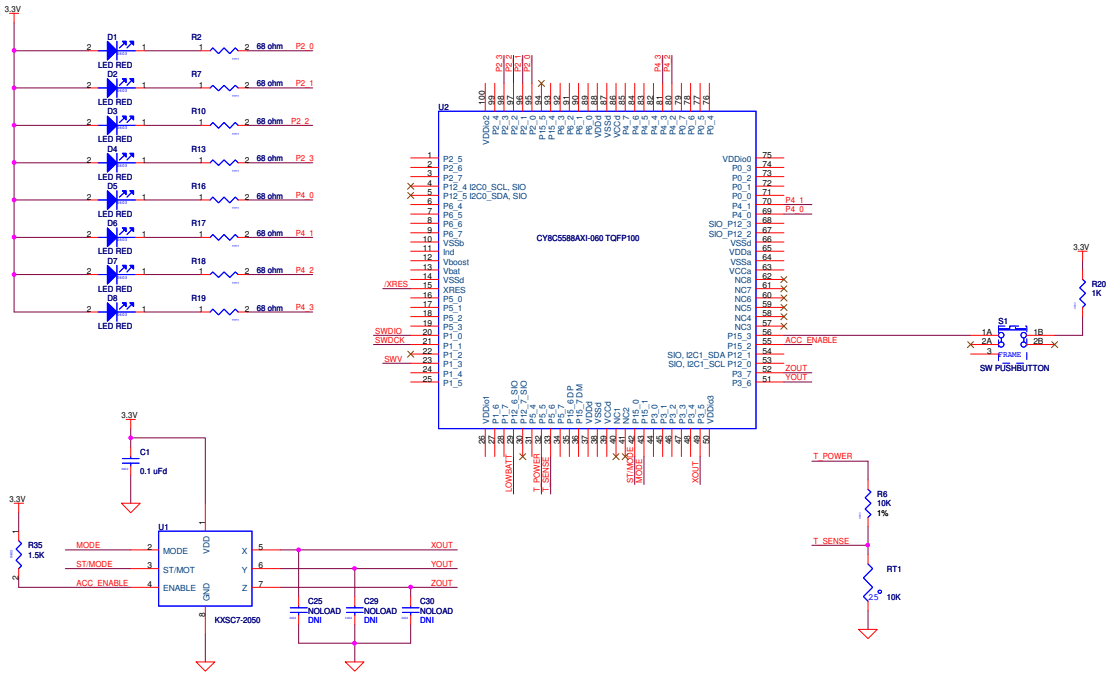

4.4 CapSense Slider

This project shows how to detect the position of a finger on the CapSense slider of the PSoC 5 First-Touch Starter Kit board and indicate its position on the LED display.

Running the CapSense project:

1. Connect the PSoC 5 FirstTouch Starter Kit board to the USB port of the PC through the USB cable.
2. Click on the example project CapSenseSlider from **Kits and Solutions** present on the Startup page of the PSoC Creator.
3. Make a folder in the desired location and click **OK**.
4. Project opens up in PSoC Creator and gets saved in that folder.
5. Follow step 1 to 4 in section 4.1.3 Build, Program, and Run the PSoC Rocks Project on page 14 to program the project into the PSoC 5 FirstTouch Starter Kit board.
6. When the download is complete, remove the PSoC 5 FirstTouch Starter Kit board from the USB port and connect a 9V DC battery to the battery connector of the PSoC 5 FirstTouch Starter Kit board.
7. Move your finger along the CapSense Slider and see the corresponding LEDs light up.

4.4.1 How the CapSense Slider Project Works

Capacitive sensing determines the presence of a conductive element, such as the finger, on a capacitive sensor incorporated on the PCB. The kit consists of a bank of CapSense sensors in the form of a slider. The size of the sensors and their position is designed such that when a finger is placed on any part of the slider, at least three sensors are active (it detects the presence of the finger by a change in its capacitance value).

The CapSense component provides APIs, which report the centroid (relative position) of the finger on the slider based on the active sensors. The firmware then lights up the LED corresponding to this centroid position.

Figure 4-16. CapSense Slider Project Flowchart

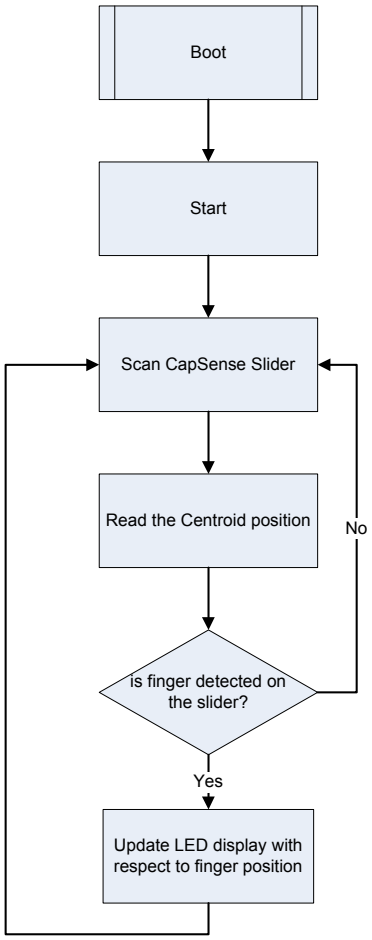

4.4.2 PCB Schematic

Figure 4-17. PCB Schematic for CapSense Slider Project

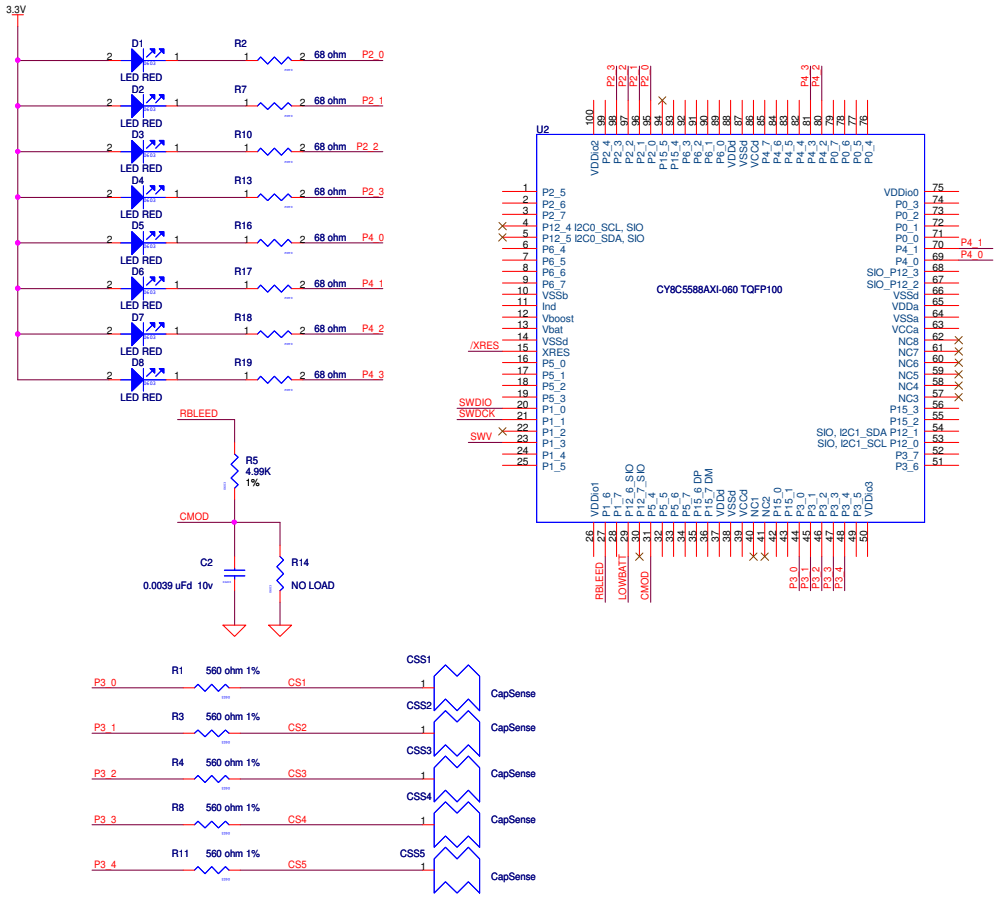

4.5 Proximity Sensor

This project senses the presence of a finger near the proximity detection antenna. The number of LEDs that light up on the LED display on the PSoC 5 FirstTouch Starter Kit board increases as the finger gets closer to the antenna.

To run the proximity sensor project, follow these steps:

1. Connect the PSoC 5 FirstTouch Starter Kit board to the USB port of the PC through the USB cable.
2. Click on the example project ProximitySensor from **Kits and Solutions** present on the Startup page of the PSoC Creator.
3. Make a folder in the desired location and click **OK**.
4. Project opens up in PSoC Creator and gets saved in that folder.
5. Follow step 1 to 4 in section 4.1.3 Build, Program, and Run the PSoC Rocks Project on page 14 to program the project into the PSoC 5 FirstTouch Starter Kit board.
6. When the download is complete, remove the PSoC 5 FirstTouch Starter Kit board from the USB port.
7. Attach the wire antenna to the board at the proximity sensor connector and connect the 9V DC battery to the battery connector of the PSoC 5 FirstTouch Starter Kit board.
8. Move your finger near and away from the proximity antenna. As your finger comes closer to the antenna, the number of LEDs that light up increases. When it does not sense your finger or hand near the antenna, all the LEDs are turned off.

Figure 4-18. Wire Antenna attached to Proximity Sensor Connector

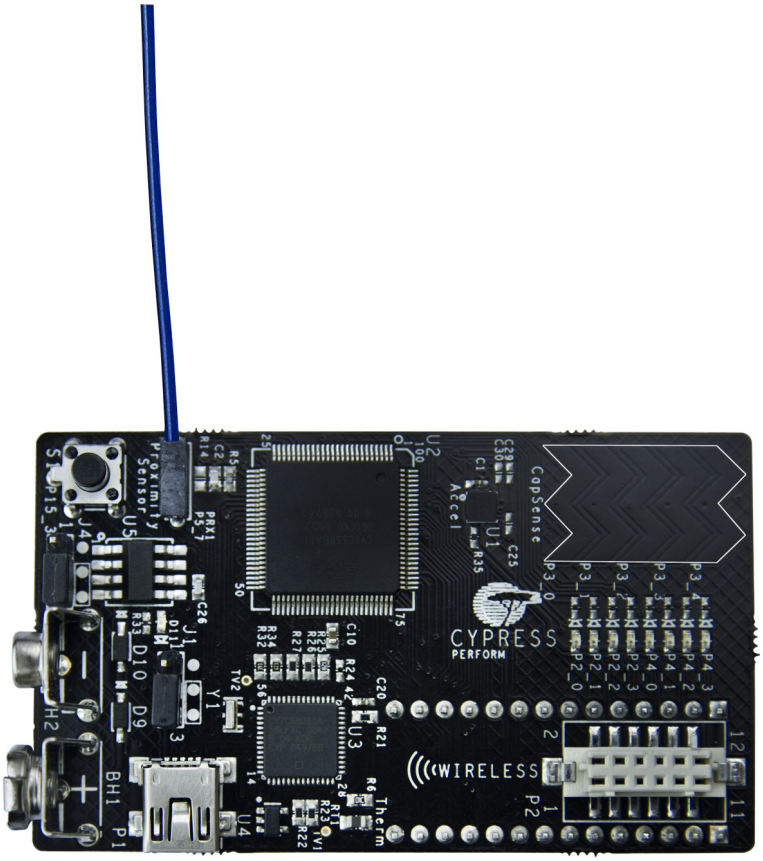

4.5.1 How the Proximity Sensor Project Works

Proximity detection is performed by a proximity antenna acting as a capacitive sensor. The proximity antenna consists of a wire connected to the proximity connector on the board.

Upon power up, the board establishes a baseline capacitance value of the board along with the antenna attached to it. This is used as a reference value of capacitance and is called the parasitic capacitance of the board.

When a conductive object such as a human finger is brought close to the antenna, the overall capacitance of the board changes. This change in capacitance determines the proximity of the finger to the antenna. An increase in capacitance corresponds to the finger being closer to the antenna.

This is used to light up the LEDs based on the proximity of the finger to the antenna. The number of LEDs turned on increases as the proximity of the finger increases.

To establish the parasitic capacitance, the antenna must be connected to the board before power up. The baseline for capacitive sensors is updated continuously by the firmware. This accounts for any changes in environmental conditions during the operation.

Figure 4-19. Proximity Sensor Project Flowchart

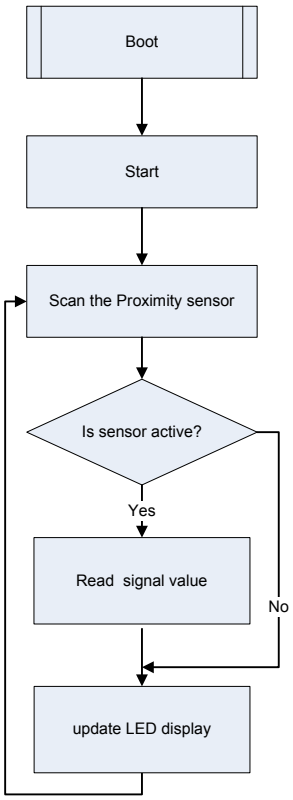

4.5.2 PCB Schematic

Figure 4-20. PCB Schematic for Proximity Detection Project

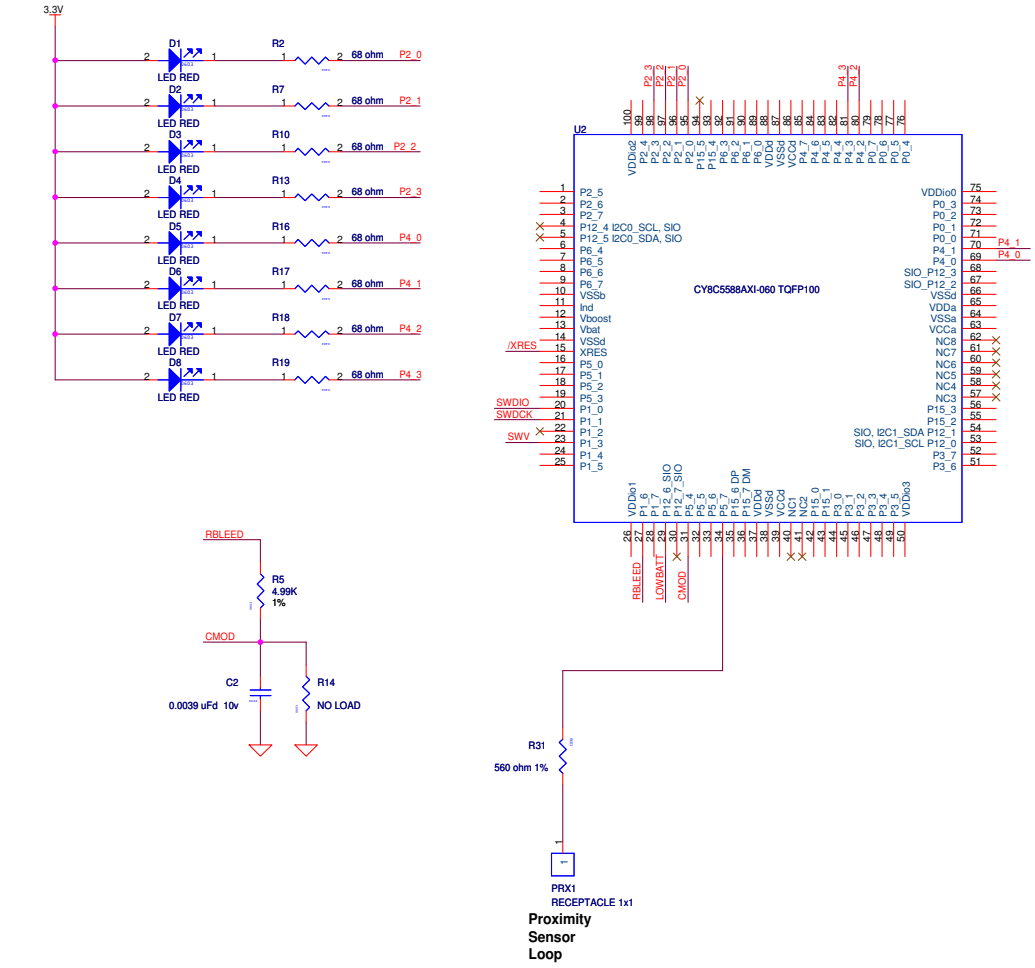

5. Technical Reference

When creating a new project or modifying an existing project, refer to the PSoC 5 FirstTouch Starter Kit board schematic provided in section 5.1 PSoC 5 FirstTouch Starter Kit Schematic on page 34 and the pin assignment tables listed in section 5.2 PSoC 5 Pin Assignment on PSoC 5 FirstTouch Starter Kit Board on page 43.

5.1 PSoC 5 FirstTouch Starter Kit Schematic

Figure 5-1. PSoC 5 FirstTouch Starter Kit Design Schematic

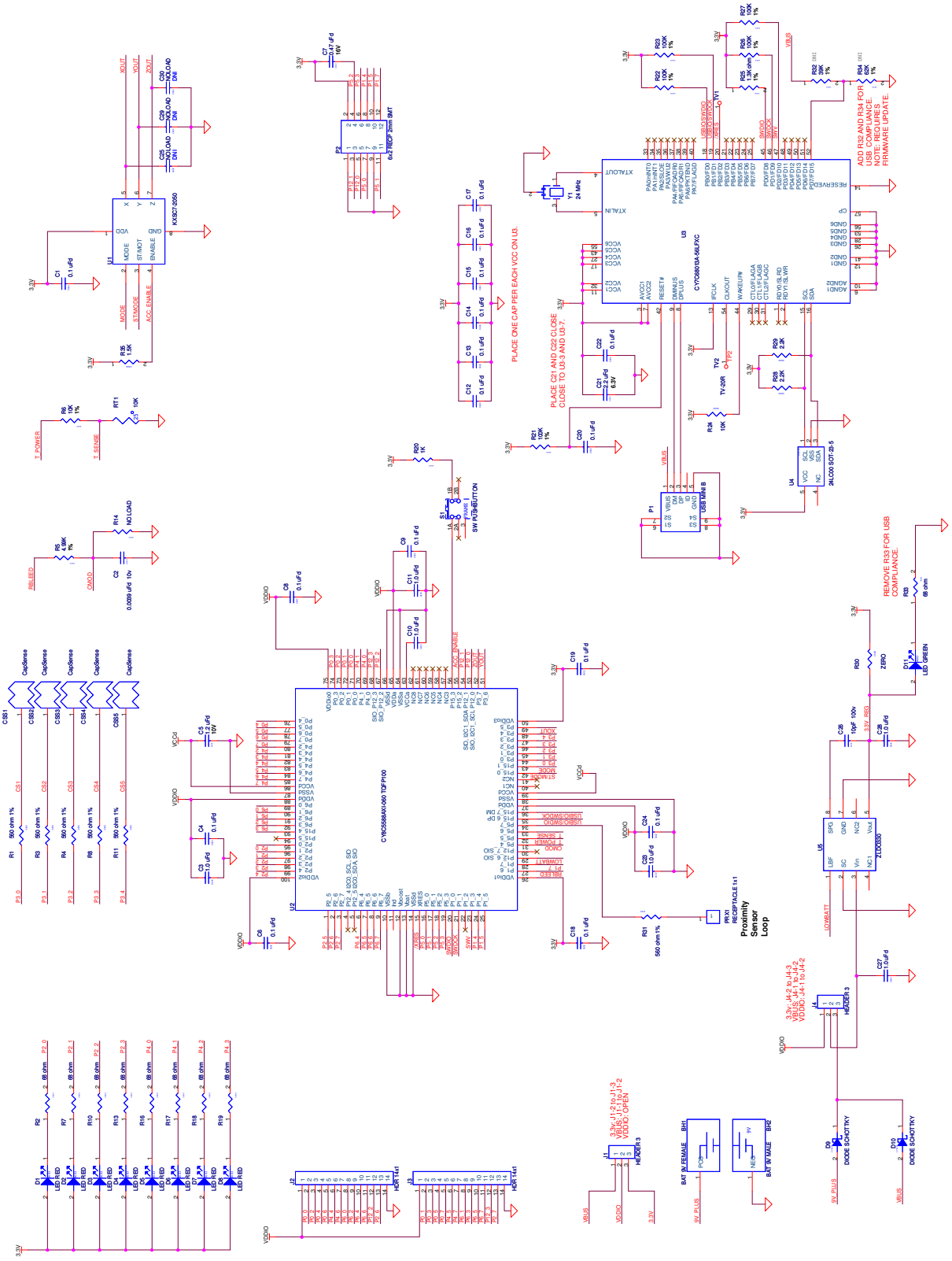

5.1.1 Hardware Jumpers

There are two jumpers on the PCB for setting the power configuration. They are J1 and J4. These jumpers are for selecting the source for powering the PSoC 5. The options are to power the PSoC 5 from the on board 3.3V regulator, to run the PSoC 5 from the USB connector, or to supply power from off board using the J2/J3 connectors.

J4 is for selecting the power source to drive the 3.3 volt regulator. This regulator can be used to power everything on the board or just the accelerometer. The regulator cannot be powered independently from the VDDIO bus. It must either power the VDDIO bus or be powered by it.

J1 is for selecting the power source of the PSoC 5. The I/O cells of the PSoC 5 are driven by this source level. Only the I/O cells that the accelerometer is connected to remain connected to 3.3V and must power up with the VDDIO bus or after the VDDIO power bus.

Valid combinations of the jumpers are:

- 3.3V operation
  - J1-2 to J1-3
  - J4-2 to J4-3
- VBUS operation
  - J1-1 to J1-2
  - J4-1 to J4-2
- VDDIO
  - J1 open
  - J4-1 to J4-2

5.1.2 Board Layout

Figure 5-2. Primary Side (Primary Silkscreen)

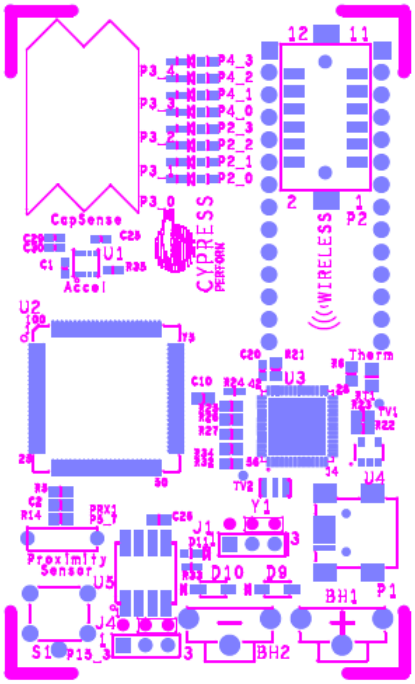

PDC-09579 REV ** PRIMARY SILKSCREEN

Figure 5-3. Secondary Side (Secondary Silkscreen)

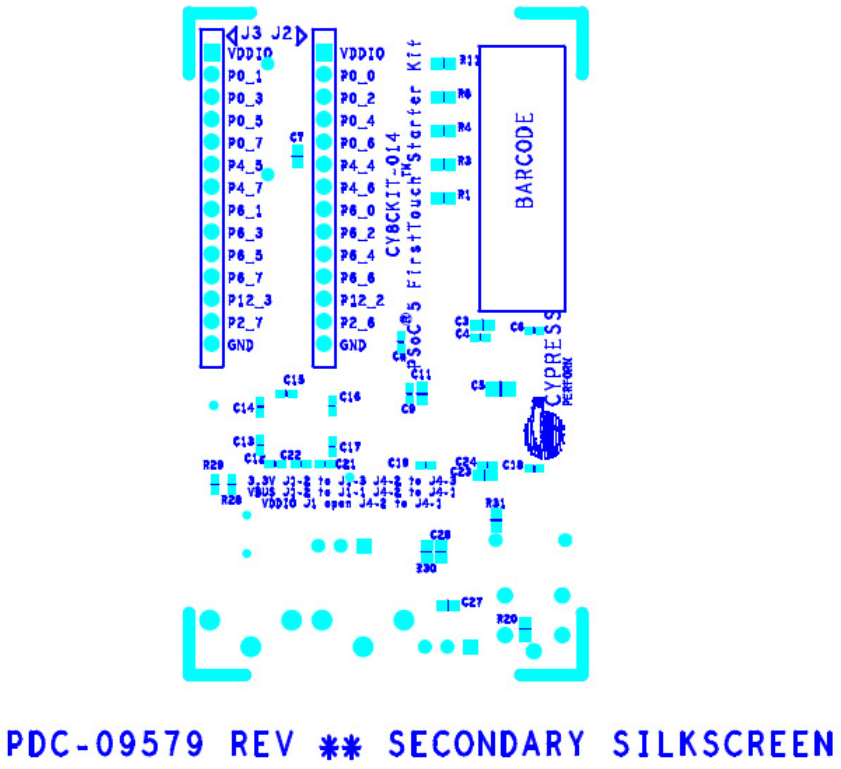

5.1.3 Bill of Material (BOM)

Table 5-1. Bill of Material (BOM)

Item	Qty	Reference	Description	Manufacturer	Mfr Part Number
1			PCB	Cypress	PDC-09579 REV.**
2	1	BH1	BATTERY HOLDER 9V Female PC MT	Keystone Electronics	594
3	1	BH2	BATTERY HOLDER 9V Male PC MT	Keystone Electronics	593
4	16	C1, C4, C6, C8, C9, C12, C13, C14, C15, C16, C17, C18, C19, C20, C22, C24	CAP .1UF 16V CERAMIC Y5V 0402	Panasonic - ECG	ECJ-0EF1C104Z
5	1	C2	CAP FILM PPS .0039UF 10V 0603 2%	Panasonic	ECH-U01392GX5
6	6	C3, C10, C11, C23, C27, C28	CAP CERAMIC 1.0UF 25V X5R 0603 10%	Taiyo Yuden	TMK107BJ105KA-T
7	1	C5	CAP CERAMIC 1.2UF 10V X5R 0805	Kemet	C0805C125K8PACTU
8	1	C7	CAP CERM .47UF 10% 16V X5R 0603	AVX	0603YD474KAT2A
9	1	C21	CAP CER 2.2UF 6.3V 20% X5R 0402	Panasonic - ECG	ECJ-0EB0J225M
10	1	C26	CAP CER 10PF 100V C0G 0603	Murata	GRM1885C2A100RA01D
11	8	D1, D2, D3, D4, D5, D6, D7, D8	LED RED CLEAR 0603 SMD	Lite-On Trading USA, Inc.	LTST-C190CKT
12	2	D9, D10	DIODE SCHOTTKY 0.5A 20V SOD-123	Fairchild Semiconductor	MBR0520L
13	1	D11	LED RED CLEAR 0603 SMD	Lite-On Trading USA, Inc.	LTST-C190CKT
14	2	J1, J4	CONN HEADER 3POS.100 VERT TIN	Molex/Waldom Electronics Corp	22-28-4030
15	2	J2, J3	CONN HEADER 14POS .100 VERT TIN	Molex Connector Corporation	22-28-4140
16	1	PRX1	CONN RCPT 1POS .100" SNGL HORZ	Samtec Inc	BCS-101-L-S-HE
17	1	P1	CONN USB MINI B SMT RIGHT ANGLE	TYCO	1734035-2
18	1	P2	CONN RECEPT 12POS 2mm SMD TIN	Hirose Electric Co. LTD.	DF11Z-12DS-2V(20)
19	1	RT1	THERMISTOR 10K OHM NTC 0805 SMD	Murata	NCP21XV103J03RA
20	6	R1, R3, R4, R8, R11, R31	RES 560 OHM 1/10W 1% 0603 SMD	Rohm	MCR03EZPFX5600
21	8	R2, R7, R10, R13, R16, R17, R18, R19, R33	RES 68 OHM 1/16W 5% 0402 SMD	Panasonic - ECG	ERJ-2GEJ680X

Table 5-1. Bill of Material (BOM) *(continued)*

Item	Qty	Reference	Description	Manufacturer	Mfr Part Number
22	1	R5	RES 4.99K OHM 1/ 16W 1% 0603 SMD	Panasonic - ECG	ERJ-3EKF4991V
23	1	R6	RES 10.0K OHM 1/ 16W 1% 0603 SMD	Yageo Corporation	RC0603FR-0710KL
24	1	R20	RES 1.0K OHM 1/16W 5% 0603 SMD	Panasonic - ECG	ERJ-3GEYJ102V
25	5	R21, R22, R23, R26, R27	RES 100K OHM 1/ 10W 1% 0603 SMD	Yageo	RC0603FR-07100KL
26	1	R24	RES 10K OHM 1/16W 5% 0402 SMD	Phycomp USA Inc	9C1A04021002JLHF3
27	1	R25	RES 1.30K OHM 1/ 10W 1% 0603 SMD	Panasonic-ECG	ERJ-3EKF1301V
28	2	R28, R29	RES 2.2K OHM 1/16W 5% 0402 SMD	Panasonic - ECG	ERJ-2GEJ222X
29	1	R30	RES ZERO OHM 1/ 16W 5% 0603 SMD	Panasonic - ECG	ERJ-3GEY0R00V
30	1	R32	RES 39.0K OHM 1/ 10W 1% 0603 SMD	Rohm Semiconductor	MCR03EZPFX3902
31	1	R34	RES 62.0K OHM 1/ 10W 1% 0603 SMD	Rohm Semiconductor	MCR03EZPFX6202
32	1	R35	RES 1.50K OHM 1/ 16W 1% 0402 SMD	Panasonic - ECG	ERJ-2RKF1501X
33	1	S1	LT SWITCH 6MM 100GF H=7MM TH	Panasonic - ECG	EVQ-PBC07K
34	1	U1	Tri-axis 1.5g-6, Analog 3x3x0.9mm LGA	KIONIX	KXSC7-2050
35	1	U2	PSoC 5 Programmable System-on-Chip	Cypress Semiconductor	CY8C5588AXI-060
36	1	U3	IC, FX2 HIGH-SPEED USB PERIPHERAL CONTROLLER QFN56	Cypress Semiconductor	CY7C68013A-56LFXC
37	1	U4	IC SERIAL EEPROM 128 BIT 2.5V SOT-23-5	Microchip Technology	24LC00T-I/OT
38	1	U5	IC VREG LOW DROP 3.3V SMD SM-8	Zetex Inc	ZLDO330T8TA
39	1	Y1	RESONATOR, 24.000MHZ, WITH CAPS, SMD	Murata	CSTCE24M0XK2***-R0
40	2	N/A	SHUNT/JUMPER 2POS .100 BLACK	Superior Tech Co	MJPB-D02BG1CA-A
41	1	LABEL	PCA and Serial Number Barcode Label		

Table 5-1. Bill of Material (BOM) *(continued)*

Item	Qty	Reference	Description	Manufacturer	Mfr Part Number
NO LOAD Components					
42	3	C25, C29, C30	CAP 0402 NO LOAD	NA	NA
43	1	R14	RES NO LOAD 0603 SMD	NA	NA
44	2	TV1, TV2	TEST VIA 40 HOLE 20 PLATED	NONE	
45	5	CSS1, CSS2, CSS3, CSS4, CSS5	CapSense Slider Element	Manufacturing Process	NA

5.2 PSoC 5 Pin Assignment on PSoC 5 FirstTouch Starter Kit Board

Table 5-2. Pin Assignments

Pin Number	Port Number	Design Function
1	P2[5]	Unused / No connect
2	P2[6]	General expansion connector J2 pin 13
3	P2[7]	General expansion connector J3 pin 13
4	P12[4]	Unused/No Connect
5	P12[5]	Unused/No Connect
6	P6[4]	General expansion connector (J2) Pin 10
7	P6[5]	General expansion connector (J3) Pin 10
8	P6[6]	General expansion connector (J2) Pin 11
9	P6[7]	General expansion connector (J3) Pin 11
10	Vssb	GND
11	Ind	Unused/No Connect
12	Vboost	GND
13	Vbat	GND
14	Vssd	GND
15	XRES	Reset from FX2LP
16	P5[0]	Wireless expansion connector pin 7
17	P5[1]	Wireless expansion connector pin 11
18	P5[2]	Wireless expansion connector pin 4
19	P5[3]	Wireless expansion connector pin 6
20	P1[0]	Programming/Debugging Data line
21	P1[1]	Programming/Debugging Clock line
22	P1[2]	No Connect
23	P1[3]	Debugging, Single Wire viewer
24	P1[4]	Wireless expansion connector pin 8
25	P1[5]	Wireless expansion connector pin 10
26	Vddio1	3.3V
27	P1[6]	CapSense feedback resistor
28	P1[7]	Wireless expansion connector pin 12
29	P12[6]	Battery low indication input
30	P12[7]	No Connect
31	P5[4]	CapSense Modulator capacitor
32	P5[5]	Thermistor Analog input
33	P5[6]	Thermistor Drive Voltage reference
34	P5[7]	Proximity Sense antenna connector
35	P15[6]	USB/SWD Interface to FX2LP
36	P15[7]	USB/SWD Interface to FX2LP
37	Vddd	3.3V
38	Vssd	GND
39	Vccd	Input to digital core

Table 5-2. Pin Assignments *(continued)*

Pin Number	Port Number	Design Function
40	NC	No Connect
41	NC	No Connect
42	P15[0]	Accelerometer ST/Mode
43	P15[1]	Accelerometer Mode
44	P3[0]	CapSense slider element 1
45	P3[1]	CapSense slider element 2
46	P3[2]	CapSense slider element 3
47	P3[3]	CapSense slider element 4
48	P3[4]	CapSense slider element 5
49	P3[5]	Accelerometer X axis analog input
50	Vddio3	3.3V
51	P3[6]	Accelerometer Y axis analog input
52	P3[7]	Accelerometer Z axis analog input
53	P12[0]	Wireless expansion connector pin 5
54	P12[1]	Wireless expansion connector pin 3
55	P15[2]	Accelerometer enable/sleep
56	P15[3]	General purpose Push Button Switch
57	NC	No Connect
58	NC	No Connect
59	NC	No Connect
60	NC	No Connect
61	NC	No Connect
62	NC	No Connect
63	Vcca	Input to analog core
64	Vssa	GND
65	Vdda	3.3V
66	Vssd	GND
67	P12[2]	General expansion connector (J2) Pin 12
68	P12[3]	General expansion connector (J3) Pin 12
69	P4[0]	LED 5 drive
70	P4[1]	LED 6 drive
71	P0[0]	General expansion connector (J2) Pin 2
72	P0[1]	General expansion connector (J3) Pin 2
73	P0[2]	General expansion connector (J2) Pin 3
74	P0[3]	General expansion connector (J3) Pin 3
75	Vddio0	3.3V
76	P0[4]	General expansion connector (J2) Pin 4
77	P0[5]	General expansion connector (J3) Pin 4
78	P0[6]	General expansion connector (J2) Pin 5
79	P0[7]	General expansion connector (J3) Pin 5

Table 5-2. Pin Assignments *(continued)*

Pin Number	Port Number	Design Function
80	P4[2]	LED 7 drive
81	P4[3]	LED 8 drive
82	P4[4]	General expansion connector (J2) Pin 6
83	P4[5]	General expansion connector (J3) Pin 6
84	P4[6]	General expansion connector (J2) Pin 7
85	P4[7]	General expansion connector (J3) Pin 7
86	Vccd	Input to digital core
87	Vssd	GND
88	Vddd	3.3V
89	P6[0]	General expansion connector (J2) Pin 8
90	P6[1]	General expansion connector (J3) Pin 8
91	P6[2]	General expansion connector (J2) Pin 9
92	P6[3]	General expansion connector (J3) Pin 9
93	P15[4]	unused / No Connection
94	P15[5]	No Connect
95	P2[0]	LED 1 drive
96	P2[1]	LED 2 drive
97	P2[2]	LED 3 drive
98	P2[3]	LED 4 drive
99	P2[4]	unused / No Connection
100	Vddio2	3.3V