PSoC® 4 ANALOG FRONT END SHIELD BOARD

CY8CKIT-032 is an Arduino™ Uno R3 compatible shield intended to be used as a companion to a baseboard (not included in this kit) containing Arduino Uno R3 compatible headers and I²C master capability. This shield adds an analog front end (AFE) and user interface to the baseboard. Example compatible baseboards are the CYW943907AEVAL1F Wi-Fi kit, CYW920706WCDEVAL Bluetooth kit, and CY8CKIT-044 PSoC 4 M-Series Pioneer kit. A PSoC Creator project demonstrating the use of this shield with the CY8CKIT-044 PSoC 4 M-Series Pioneer kit is provided with the kit firmware.

This kit is used in various Cypress Academy training classes and videos to facilitate teaching how to create devices for the Internet of Things (IoT). One example video class can be found at www.cypress.com/training/wicedwifi-101.

A PSoC 4 Analog Coprocessor is used on the shield to read analog sensors (temperature, humidity, ambient light and potentiometer voltage) and to provide a CapSense® user interface. The PSoC 4 Analog Coprocessor acts as an I²C slave allowing analog sensor values, CapSense button, CapSense proximity, and mechanical button states to be read by the baseboard.

CY8CKIT-032 Block Diagram

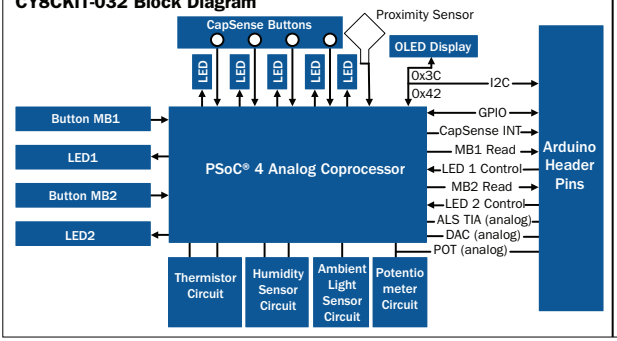

System Block Diagram

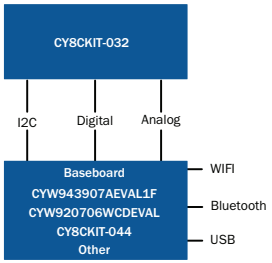

Shield Pinout

Arduino Pin	Kit Function
A0	Ambient Light Sensor (after TIA implemented in PSoC 4 Analog Coprocessor)
A1	DAC voltage (implemented in PSoC 4 Analog Coprocessor)
A2	Potentiometer
D0	UART RX (connected to PSoC, but UART functionality is not implemented in default firmware)
D1	UART TX (connected to PSoC, but UART functionality is not implemented in default firmware)
D2	GPIO (unused pin from PSoC available for custom firmware)
D4	Mech Button 1 (physically connected to PSoC Smart IO)
D5	LED 1 (physically connected to PSoC Smart IO)
D11	LED 2 (physically connected to PSoC Smart IO)
D12	Mech Button 2 (physically connected to PSoC Smart IO)
D13	CapSense Interrupt (connected to PSoC)
SDA	I2C SDA (connected to PSoC and OLED display)
SCL	I2C SCL (connected to PSoC and OLED display)
RES	Reset (connected to PSoC XRES)
5V	5V power option (selectable using resistor or jumper)
3.3V	3.3V power option (selectable using resistor or jumper)
GND	Ground

Note: Pins : A3, A4, A5, D3, D6, D7, D8, D9, D10, IOREF, AREF and VIN are not connected on the shield.

PSoC® 4 ANALOG FRONT END SHIELD BOARD

Power Selection

Voltage	Jumper Position
3.3V (default)	Selected by default using resistor R32. Can also be selected by removing R32 and populating 3 pin header J5.
5V	Can be selected by moving resistor R32 to the V50 position or by removing resistor R32 and populating 3 pin header J5.

PSoC® I2C Register Map

Offset	Description	Format	Details
0x00	DAC Voltage	4 Byte Float	Desired DAC voltage in Volts
0x04	LED Value	1 Byte	CapSense LED values if LED Control bit 1 is 1. Mapping is: Bit 0: CLED0 Bit 2: CLED2 Bit 1: CLED1 Bit 3: CLED3
0x05	LED Control	1 Byte	Bit 0 sets how the 4 CapSense LEDs are controlled: 0 = CapSense Control 1 = Base Board Control via the LED Value Register
0x06	Button State	1 Byte	State of CapSense, Proximity, and Mechanical Buttons: Bit 0: CapSense B0 Bit 4: Mechanical Button 1 Bit 1: CapSense B1 Bit 5: Mechanical Button 2 Bit 2: CapSense B2 Bit 6: Proximity Bit 3: CapSense B3
0x07	Temperature	4 Byte Float	Temperature in °C
0x0B	Humidity	4 Byte Float	Humidity in %
0x0F	Ambient Light	4 Byte Float	Ambient light in lux
0x13	Potentiometer	4 Byte Float	Potentiometer in V

ADDITIONAL RESOURCES

Training - Workshops/Webinars/On-Demand
cypress.com/training

Cypress Education - University Alliance
cypress.com/university

Online Technical Support
cypress.com/support

Cypress Developer Community™
cypress.com/cdc

CyPros® Certified Consultants
cypress.com/design-partner-program

Cypress Online Store
cypress.com/cypress-store

For the latest information about this kit, visit www.cypress.com/CY8CKIT-032

© 2017-2018 Cypress Semiconductor Corporation. All rights reserved.
All trademarks or registered trademarks referenced herein are the property of their respective owners.
002-21808 Rev.*A

CYPRESS EMBEDDED IN TOMORROW™