OPTIGA™ Authenticate NBT

Antenna design guide

About this document

Scope and purpose

The scope of this document is to provide antenna designers with a set of guidelines for the development of coils intended for use with the OPTIGA™ Authenticate NBT bridge tag devices. It contains information about important electrical parameters as well as some design examples. The recommendations in this document are for guidance only.

The purpose of this document is to provide product details relevant to designing an NFC antenna to optimize the contactless performance.

Intended audience

This document is primarily intended for antenna designers who want to understand the principles to design an antenna for the OPTIGA™ Authenticate NBT.

Table of contents

About this document . . . 1
Table of contents . . . 2
List of tables . . . 4
List of figures . . . 5
1 Introduction . . . 6
1.1 Documentation landscape . . . 6
1.2 NFC I2C bridge tags . . . 7
2 Product overview . . . 8
2.1 Components of a bridge tag . . . 8
2.1.1 Equivalent circuit for a bridge tag . . . 9
2.1.2 SMD package . . . 9
2.1.3 Carrier material . . . 10
2.1.4 OPTIGA™ Authenticate NBT bridge tag . . . 10
2.1.5 Tuning/matching components . . . 10
2.1.6 Antenna . . . 10
2.2 Geometrical and electrical parameters of an antenna . . . 11
2.2.1 Physical antenna dimensions . . . 11
2.2.2 Geometrical antenna parameters . . . 11
2.2.3 Electrical antenna parameters . . . 12
2.2.3.1 Coil inductance (L_{coil}) . . . 12
2.2.3.2 Coil capacitance (Ccoil) . . . 12
2.2.3.3 Coil resistance (R_{coil}) . . . 12
2.2.3.4 Resonance frequency (f_{res}) . . . 13
2.2.4 Antenna design aspects . . . 13
2.2.4.1 Antenna size . . . 13
2.2.4.2 Target resonance frequency (f_{res}) . . . 13
2.2.4.3 Additional recommendations . . . 13
3 Design flow . . . 15
4 Design examples . . . 16
4.1 Class 5 sized antenna . . . 16
4.1.1 Target specification . . . 16
4.1.2 Calculation with Card Coil Calculator . . . 16
4.1.3 Resulting design, Class 5 shield antenna . . . 20
4.1.4 Verification . . . 20
4.2 Class 6 sized antenna: Shield antenna, flexible mount . . . 20
4.2.1 Target specification . . . 21
4.2.2 Calculation with Card Coil Calculator . . . 21

Table of contents

4.2.3 Resulting design, Class 6 shield antenna . . . 21
4.2.4 Verification . . . 22
4.3 Class 6 sized antenna: Shield antenna, direct mount . . . 22
4.3.1 Target specification . . . 22
4.3.2 Calculation with Card Coil Calculator . . . 23
4.3.3 Resulting design, Class 6 shield antenna . . . 23
4.3.4 Verification . . . 24
4.4 Class 6 sized antenna: 20mm x 20mm . . . 24
4.4.1 Target specification . . . 24
4.4.2 Calculation with Card Coil Calculator . . . 24

5 Power matching . . . 26
5.1 Power matching with “serial first” . . . 26
5.2 Power matching with “parallel first” . . . 26

References . . . 27

Glossary . . . 28

Revision history . . . 29

Disclaimer . . . 30

List of tables

Table 1 Components of the equivalent circuit 9
Table 2 PG-USON-8-8 package capacitance 9
Table 3 On-chip input capacitance (bare die) 10
Table 4 On-chip input resistance (bare die) 10
Table 5 Geometrical antenna parameters 11
Table 6 Recommended target tag resonance frequency (f_{res}) 13
Table 7 NBT Secure Shield with Class 5 PCB antenna: f_{res} and H_{min} 20
Table 8 NBT Secure Shield with Class 6 PCB antenna, flexible mount: f_{res} and H_{min} 22
Table 9 NBT Secure Shield with Class 6 PCB antenna, direct mount: f_{res} and H_{min} 24

List of figures

Figure 1 OPTIGA™ Authenticate NBT documentation landscape 6
Figure 2 Bridge tag - IoT application scenario 8
Figure 3 NFC-only tag - application scenario 8
Figure 4 Equivalent circuit 9
Figure 5 Geometrical antenna parameters (etched or printed antenna) 11
Figure 6 Cross section of etched or printed antenna coils 11
Figure 7 Equivalent circuit of an antenna 12
Figure 8 Antenna design flow 15
Figure 9 Class 5 antenna, rectangular and circular shapes 16
Figure 10 Product and package selection 17
Figure 11 Class 5 antenna physical parameters 18
Figure 12 Class 5 antenna electrical parameters 19
Figure 13 Class 5 antenna parameter summary 19
Figure 14 NBT Secure Shield with Class 5 antenna 20
Figure 15 Class 6 antenna, rectangular and circular shapes 20
Figure 16 Class 6 antenna physical and electrical parameters flexible mount 21
Figure 17 Shield antenna – Class 6 flexible mount (default configuration) 22
Figure 18 Class 6 antenna, rectangular and circular shapes 22
Figure 19 Class 6 antenna physical and electrical parameters direct mount 23
Figure 20 Shield antenna – Class 6 direct mount 24
Figure 21 20 mm x 20 mm antenna physical and electrical parameters 25
Figure 22 Equivalent circuit of power matching with “serial first” 26
Figure 23 Equivalent circuit of power matching with “parallel first” 26

1 Introduction

This chapter provides an explanation of how this guide fits into the OPTIGA™ Authenticate NBT documentation landscape and a short product overview.

Chapter 2 provides more information about components of a bridge tag as well as electrical and geometrical parameters of an antenna.

Chapter 3 depicts the antenna design flow for the OPTIGA™ Authenticate NBT bridge tag.

Chapter 4 provides design examples for Class 5 and Class 6 PCB antennas of various sizes and dimensions.

Chapter 5 describes two main approaches for optimizing energy transfer from the antenna to the OPTIGA™ Authenticate NBT tag.

***Note**: For a collection of all available support material for the product, refer to its product page [2].*

1.1 Documentation landscape

Figure 1 depicts an overview of the OPTIGA™ Authenticate NBT's built-in support materials and their placement in the documentation landscape.

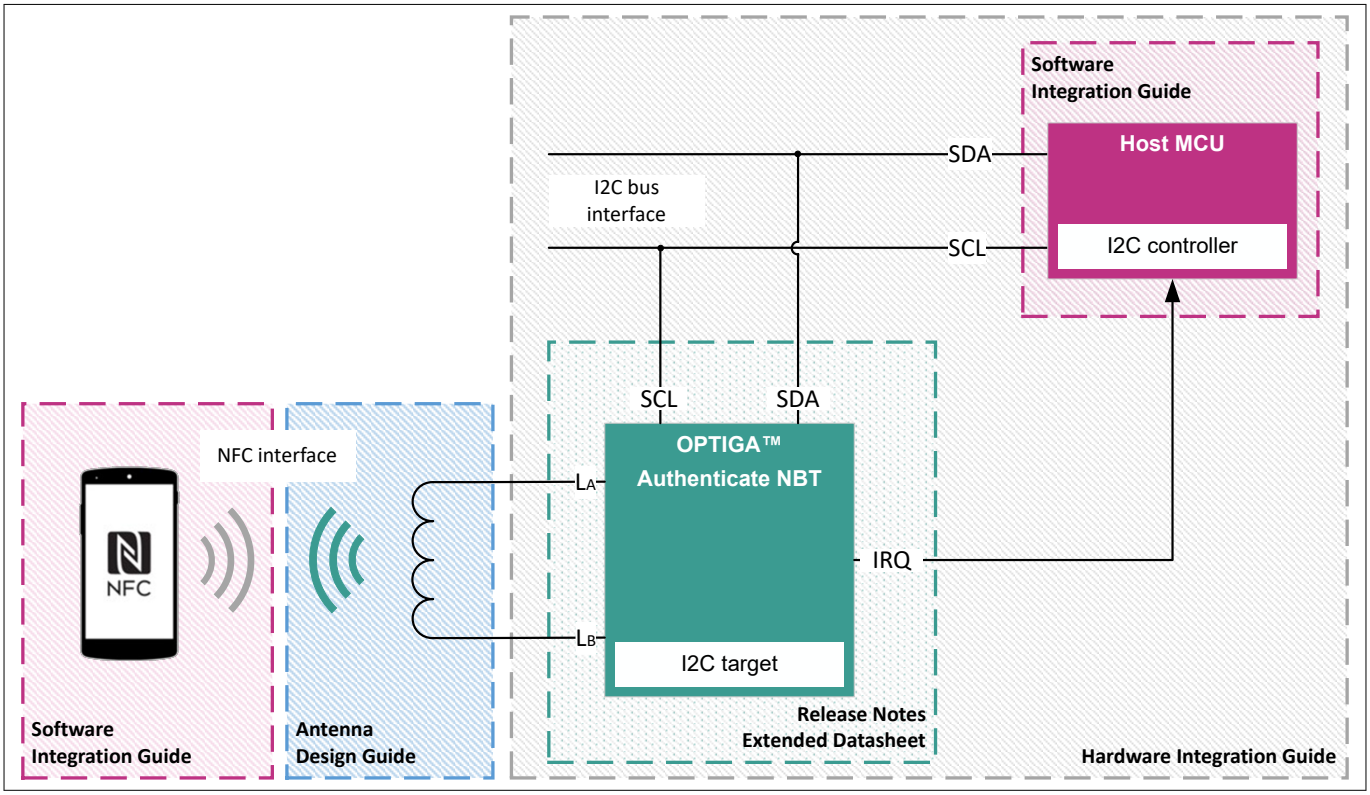

Figure 1 OPTIGA™ Authenticate NBT documentation landscape

The OPTIGA™ Authenticate NBT Antenna Design Guide focuses on antenna specifics and briefly describes the design process while taking into account the device's electrical parameters. It briefly explains the relevant electrical components and parameters that must be considered using equivalent circuits.

***Note**: In this document, the term "coil" will be used interchangeably with the term "antenna," as they are synonymous in the context of this usage.*

For more information about the OPTIGA™ Authenticate NBT and its electrical characteristics, refer to the Extended Datasheet document [4].

1.2 NFC I2C bridge tags

NFC Bridge Tags are dual-interface tags that enable contactless features for IoT devices via an I2C controller interface, allowing for a touch-and-go experience with a mobile phone. On one side, the NFC Bridge Tags include a contactless passive NFC interface and on the other side, a contact-based I2C target interface that connects to the MCU of the IoT device.

The OPTIGA™ Authenticate NBT harnesses the Integrity Guard 32 security architecture to provide an option for the end-user with symmetric and asymmetric cryptographic operations, as well as password-based data protection schemes. As a result, the device is ideal for security demanding applications.

This product includes device authentication, pass-through and asynchronous data transfer modes, which can be used for variety of applications such as:

- Keyless access and activation of shared mobility vehicles
- Controlled access to personal electronic devices such as HDD
- Theft prevention for electronic goods by authenticated activation

This tag can also be used in healthcare and industrial applications. The OPTIGA™ Authenticate NBT, in combination with healthcare sensors, enables access to information through an NFC-enabled mobile phone or reader. Furthermore, the device is an ideal product for industrial applications such as headless configuration and parametrization of devices, assembly line programming and fault diagnostics.

2 Product overview

The OPTIGA™ Authenticate NBT is part of Infineon's OPTIGA™ Authenticate product family. It is a ready-to-use dual-interface device that offers a contactless passive NFC interface and an I2C target interface to the host MCU. The device enables contactless feature for contact-based IoT devices.

2.1 Components of a bridge tag

The OPTIGA™ Authenticate NBT bridge tag is embedded in the hardware of an IoT device in a typical application scenario. The following are the primary components of an IoT device:

- An NFC antenna
- Tuning/matching components (optional)
- OPTIGA™ Authenticate NBT
- Host MCU, connected via the I2C bus interface

The OPTIGA™ Authenticate NBT is V_{CC} powered from the host MCU in the IoT scenario depicted in Figure 2.

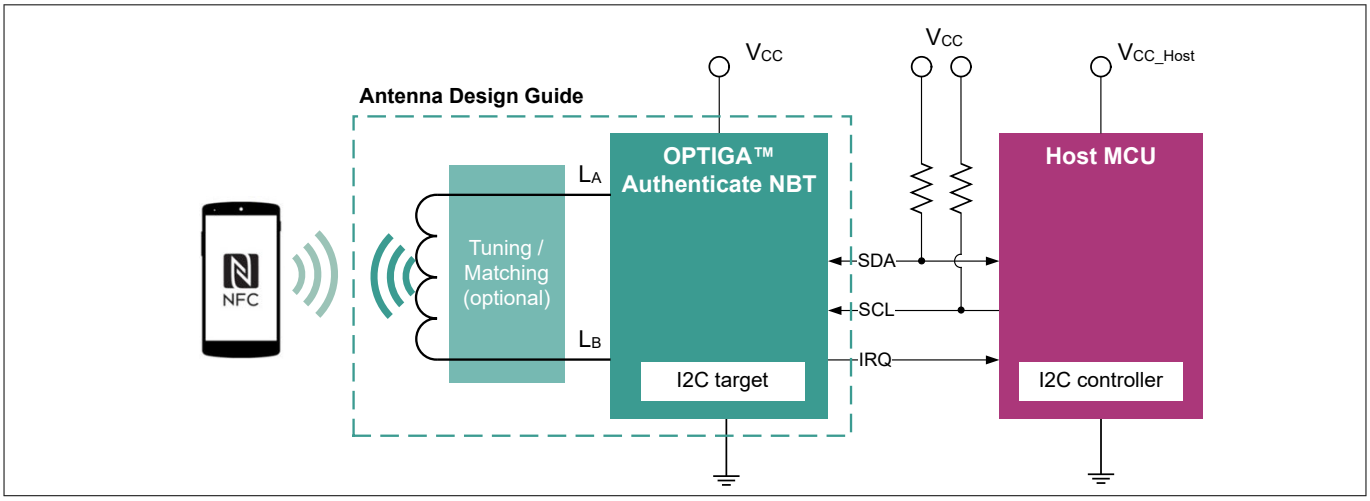

Figure 2 Bridge tag - IoT application scenario

The OPTIGA™ Authenticate NBT can also be used in an NFC-only tag setup (no host MCU, no I2C interface), where the device is either powered solely on the RF field generated by the NFC reader or it is supplied via its power pins V_{CC} and GND (see Figure 3). The antenna requirements with respect to resonance frequency are the same in all application scenarios. The communication performance (here: communication distance) is projected to improve in the V_{CC} powered configurations.

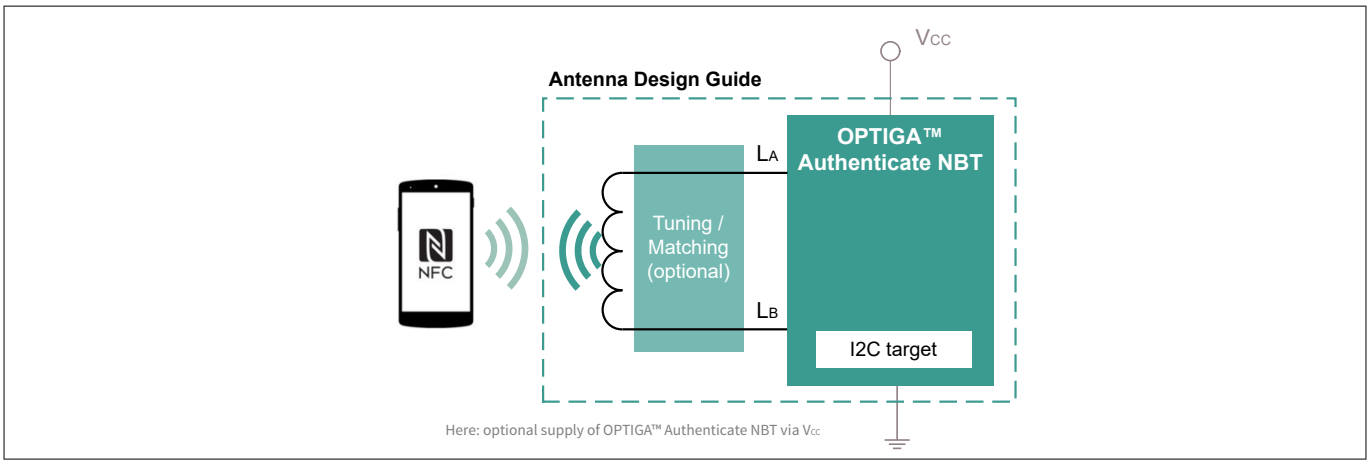

Figure 3 NFC-only tag - application scenario

2.1.1 Equivalent circuit for a bridge tag

Figure 4 depicts an electrical equivalent circuit of a OPTIGA™ Authenticate NBT bridge tag. The given electrical elements represent the bridge tag's main components, with the focus on its NFC interface.

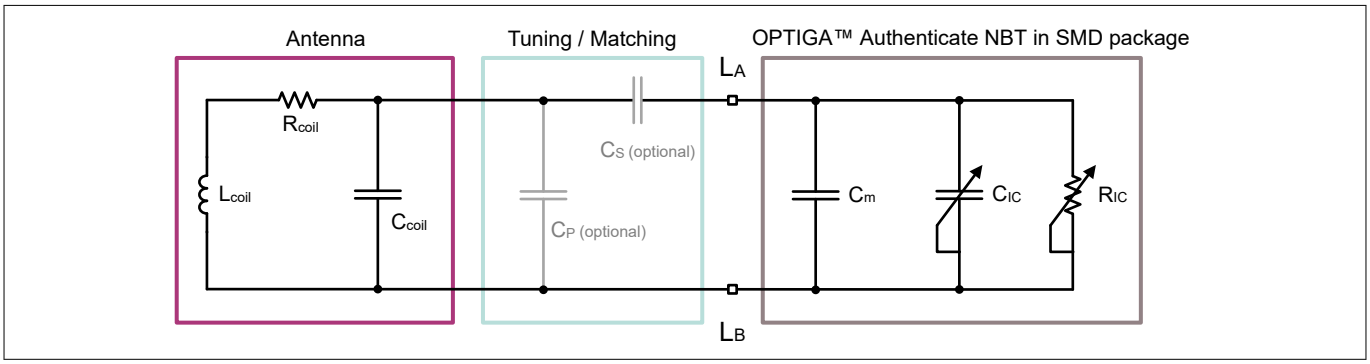

Figure 4 Equivalent circuit

***Note**: The additional capacitance added by the carrier material (FR4, flex print, etc.) is negligible, and therefore not shown in this equivalent circuit.*

Table 1 Components of the equivalent circuit

Abbreviation	Description
L_{coil}	Coil inductance
R_{coil}	Coil resistance
C_{coil}	Coil capacitance
L_A, L_B	Contact areas of the module for connecting the coil
$C_{package}$	SMD package capacitance
C_{IC}	OPTIGA™ Authenticate NBT input capacitance
R_{IC}	OPTIGA™ Authenticate NBT input resistance (load resistance)
C_S	Serial tuning/matching capacitance (optional)
C_P	Parallel tuning/matching capacitance (optional)

2.1.2 SMD package

The OPTIGA™ Authenticate NBT IC is embedded in a PG-USON-8-8 SMD package. This package enables device integration and protects it from physical stress such as extensive bending or UV rays. However, apart from the I2C bus interface and power supply pins, it also provides the antenna connections L_A and L_B.

From an electrical aspect, mounting the IC within the package adds an additional capacitance $C_{package}$ to the resonance circuit of the bridge tag. However, the capacitance of the package is almost negligible in comparison to the capacitance of the IC. As a result, the input capacitance of the entire package (IC and SMD package) is primarily determined by the IC.

Table 2 PG-USON-8-8 package capacitance

Package type	Package capacitance $C_{package}$
PG-USON-8-8	≈ 2 pF

2.1.3 Carrier material

All materials exhibit certain dielectric and thermal properties. Different parameters influence the relative permittivity (dielectric constant) of carrier materials. For FR4, for example, the thickness of the material, resin content, and glass weave style possess an impact on the capacitive component of the antenna. When using the carrier material, please keep this dependency in mind.

2.1.4 OPTIGA™ Authenticate NBT bridge tag

The OPTIGA™ Authenticate NBT is the "core" of an IoT device's contactless section. The device determines the contactless features of a bridge tag as well as the performance of the relevant contactless application.

The antenna design must be matched to the chip's input capacitance and the required operating voltage.

***Note**: The proper measurement of the chip's input capacitance in dependence of its operation voltage is an extensive procedure that is beyond the scope of this document.*

Table 3 and Table 4 list the typical on-chip input capacitance and on-chip input resistance values of an IC without a package (bare die), as well as the corresponding tolerances and measurement conditions.

Table 3 On-chip input capacitance (bare die)

Typical on-chip input capacitance (nominal value: 78 pF)	Measurement condition
75.6 ± 10% pF	2.8 V_{peak}, 13.56 MHz (threshold condition)
69 ± 10% pF	100 mV_{peak}, 13.56 MHz (unloaded condition)

Table 4 On-chip input resistance (bare die)

Typical on-chip input resistance (nominal value: 78 pF)	Measurement condition
820 ± 10% Ω	2.8 V_{peak}, 13.56 MHz (threshold condition)
6000 ± 10% Ω	100 mV_{peak}, 13.56 MHz (unloaded condition)

2.1.5 Tuning/matching components

Fine tuning of the resonance frequency as well as optimization of the energy transfer can be accomplished by including additional tuning/matching components in the PCB design:

- By adding just a capacitor in parallel (C_P), the resonance frequency can be adjusted
- By adding matching components C_P and C_S, power matching between the chip and the antenna can be achieved (refer to Chapter 5 for more information)

2.1.6 Antenna

The antenna is the electrical component utilized in the following use cases:

- The V_{CC}-powered use case enables NFC communication between the tag and the NFC reader
- The tag-only scenario powers the OPTIGA™ Authenticate NBT and enables NFC communication with the NFC reader

A well-designed antenna supports the OPTIGA™ Authenticate NBT to achieve maximum performance.

The application-specific requirements, such as reading distance or communication speed, can be used to determine the requirements for a suitable antenna.

2.2 Geometrical and electrical parameters of an antenna

The following sections provide information on both the geometrical and electrical parameters of the antenna, along with fundamental formulas that explain the relationships between these parameters.

2.2.1 Physical antenna dimensions

In general, the larger the antenna, the better the power transfer from the NFC reader to the tag (tag-only use case). However, there may be restrictions or reserved areas on the tag for the antenna turns.

2.2.2 Geometrical antenna parameters

In most cases, a simple rectangular antenna will meet the requirements. Figure 5 depicts an example of an antenna.

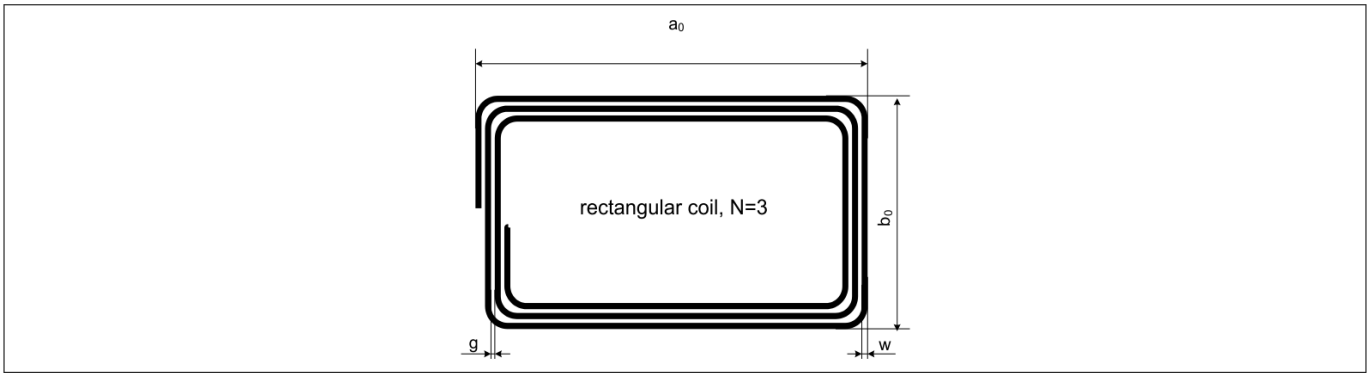

Figure 5 Geometrical antenna parameters (etched or printed antenna)

Figure 6 depicts the cross section of an etched or printed antenna.

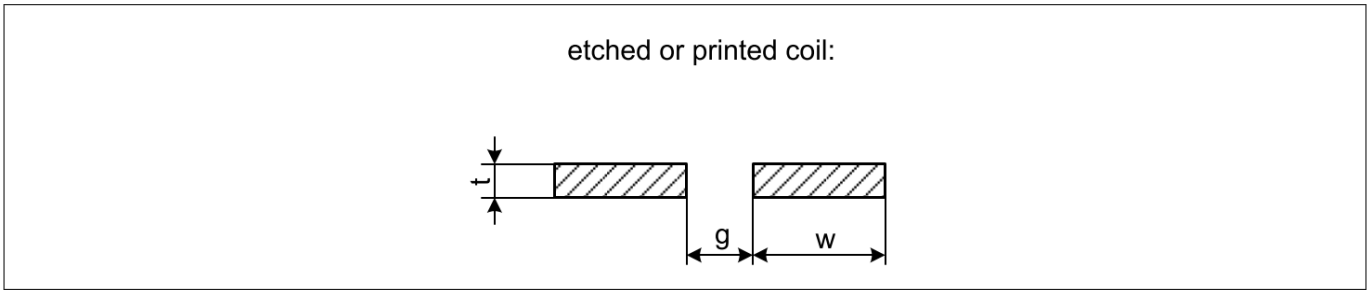

Figure 6 Cross section of etched or printed antenna coils

Table 5 Geometrical antenna parameters

Geometrical coil parameter	Description
a_0	Coil length
b_0	Coil width
N	Number of turns
w	Track width (etched or printed coil)
g	Gap between tracks (etched or printed coil)
t	Track thickness (etched or printed coil)

The outer dimensions of etched or printed coils are represented by coil length a_0 and coil width b_0. The number of turns for the antenna on small sized tags is limited by the available area within.

The process technology used to manufacture the antenna (either etching or printing) may also possess some limitations in terms of the applicable design rules, such as minimal track widths and gaps between antenna turns.

2.2.3 Electrical antenna parameters

Antennas are not ideal inductors from an electrical point of view since they additionally contain a resistive and a capacitive component. The values of these components are essential for the electrical and functional properties of the tag. Figure 7 depicts the equivalent electrical circuit of an antenna.

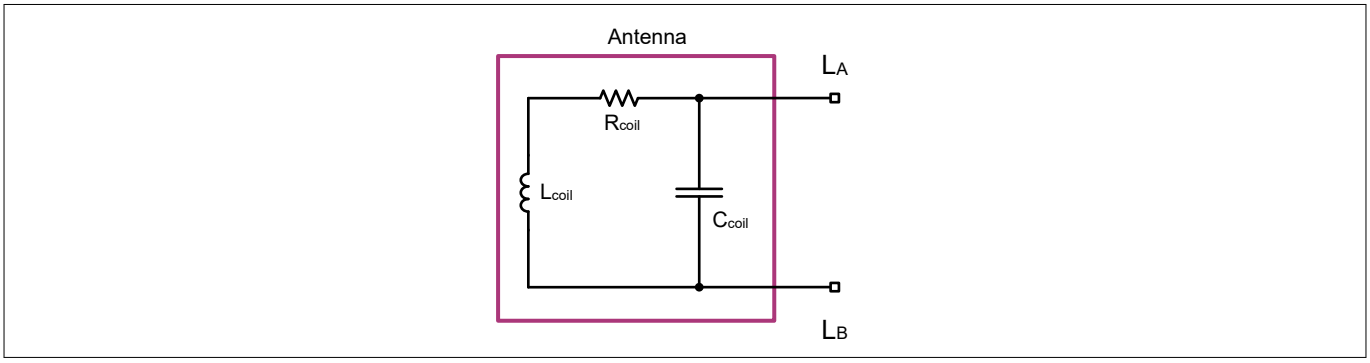

Figure 7 Equivalent circuit of an antenna

2.2.3.1 Coil inductance (L_{coil})

The coil inductance (L_{coil}) significantly influences the overall performance of the tag. The resonance frequency (f_{res}) of the circuit is defined by the inductance and capacitance (consisting of C_{coil}, C_m and C_{IC}).

In fact, the resonance frequency of the coil should be fine-tuned by adjusting parameters that affect the coil's inductance and/or capacitance. The coil inductance can be changed by using the geometrical parameters described in Figure 5 and Figure 6.

$$L_{coil} = f_{res}\ (a_0,\ b_0,\ t,\ g,\ w,\ d,\ p,\ N)$$

To estimate the inductance, the Infineon Card Coil Calculator tool (refer to Chapter 4) can be used.

2.2.3.2 Coil capacitance (Ccoil)

The capacitance (C_{coil}) is mainly affected by the close distance between the coil turns. The value of C_{coil} can be directly influenced by changing the track width *w*, track thickness *t*, or track gap *g*.

The capacitance of the coil is typically in the range between 2 and 4 pF. The coil capacitance (C_{coil}), as shown in Figure 7, is influenced by the dielectric property of the carrier material, which is described by the relative permittivity ε_r (refer to Chapter 2.1.3).

Another method for influencing the resonance frequency is to add a dedicated capacitor to increase the resulting antenna coil capacitance C_{coil}. The potentially high tolerance of this additional capacitor must be considered.

2.2.3.3 Coil resistance (R_{coil})

The resistive component R_{coil} of the antenna causes additional power losses in the tag antenna coil. The objective is to minimize the losses in comparison to the IC's power consumption. If the R_{coil} is set too high, the NFC reader must utilize more energy to operate the tag.

The coil resistance R_{coil} varies depending on the operating frequency, coil material, and coil dimensions due to physical effects such as skin effect and proximity effect.

The specification of the limits for R_{coil} refers to the quality factor Q_{coil} of the coil.

$$Q_{coil} = \frac{\omega L_{coil}}{R_{coil}} \text{ with } \omega = 2\pi f_c \text{ and } f_c = 13.56\ MHz$$

The overall quality factor of the chip-antenna system is determined by the quality factors of the tag antenna and the chip (IC). Its value is always a trade-off between maximum power range and minimal loading effect of the card on the NFC reader.

***Note**: Infineon recommends keeping the coil's quality factor as high as possible with the respective antenna manufacturing technology in order to achieve a balanced overall quality factor of the chip-antenna system.*

A minimum track width of 200 µm respectively 17.5 µm of minimum track thickness for etched copper coils should be used to ensure an adequate quality factor for the antenna. The value of the coil resistance must be verified through measurement. A detailed statement for printed coils is not possible due to the wide range of materials and manufacturing processes available.

2.2.3.4 Resonance frequency (f_{res})

The recommended nominal target value of the resonance frequency (f_{res}) of a complete card is determined by the product selected and the coil size.

Generally, the resonance frequency (f_{res}) of a tag is calculated using the following (simplified) formula:

$$f_{res} = \frac{1}{2 \pi \sqrt{L_{coil} * (C_{coil} + C_m + C_{IC})}}$$

Individual tag performance will be degraded by either too high or too low resonance frequencies, especially for smaller antenna form factors. This should be taken into account when developing small antennas for specific applications.

2.2.4 Antenna design aspects

The design of the antenna can be customized to provide some flexibility, which can enhance the performance of NFC contactless technology. The main parameters of the resonant circuit are antenna size and resonance frequency, both of which possess a significant impact on contactless performance.

2.2.4.1 Antenna size

The antenna area should always be as large as possible from a performance aspect. However, antenna size is always determined by customer, project, and application requirements, and is frequently constrained by other factors.

2.2.4.2 Target resonance frequency (f_{res})

The recommended resonance frequency for the specific antenna and target application should be used to achieve the best contactless performance of the bridge tag.

Table 6 provides a resonance frequency recommendation for various antenna sizes based on the OPTIGA™ Authenticate NBT chip's nominal on-chip input capacitance of 78 pF.

Table 6 Recommended target tag resonance frequency (f_{res})

Antenna size	Target resonance frequency (f_{res})
Class 5, 40.5 mm x 24.5 mm	13.56 MHz
Class 6, 25 mm x 20 mm	13.56 MHz
Class 6, 20 mm x 20 mm	13.56 MHz

2.2.4.3 Additional recommendations

When integrating the antenna into a PCB, ensure the following:

- The NFC antenna should be routed on the utmost layer from where the chip is operated to reduce distances

- Do not place the GND plane (or any other supply plane) underneath the NFC antenna
- Do not route copper traces underneath the NFC antenna
- Wiring, components and objects should be kept away from the NFC antenna

When designing the product housing, ensure the following:

- Electrically conductive materials should be kept away from the NFC antenna
- Avoid using metal enclosures that provide complete electrical connectivity and have circular shapes in close proximity
- Enclosure walls should be kept away from the NFC antenna from any direction

3 Design flow

Figure 8 depicts the antenna design flow for the OPTIGA™ Authenticate NBT bridge tag.

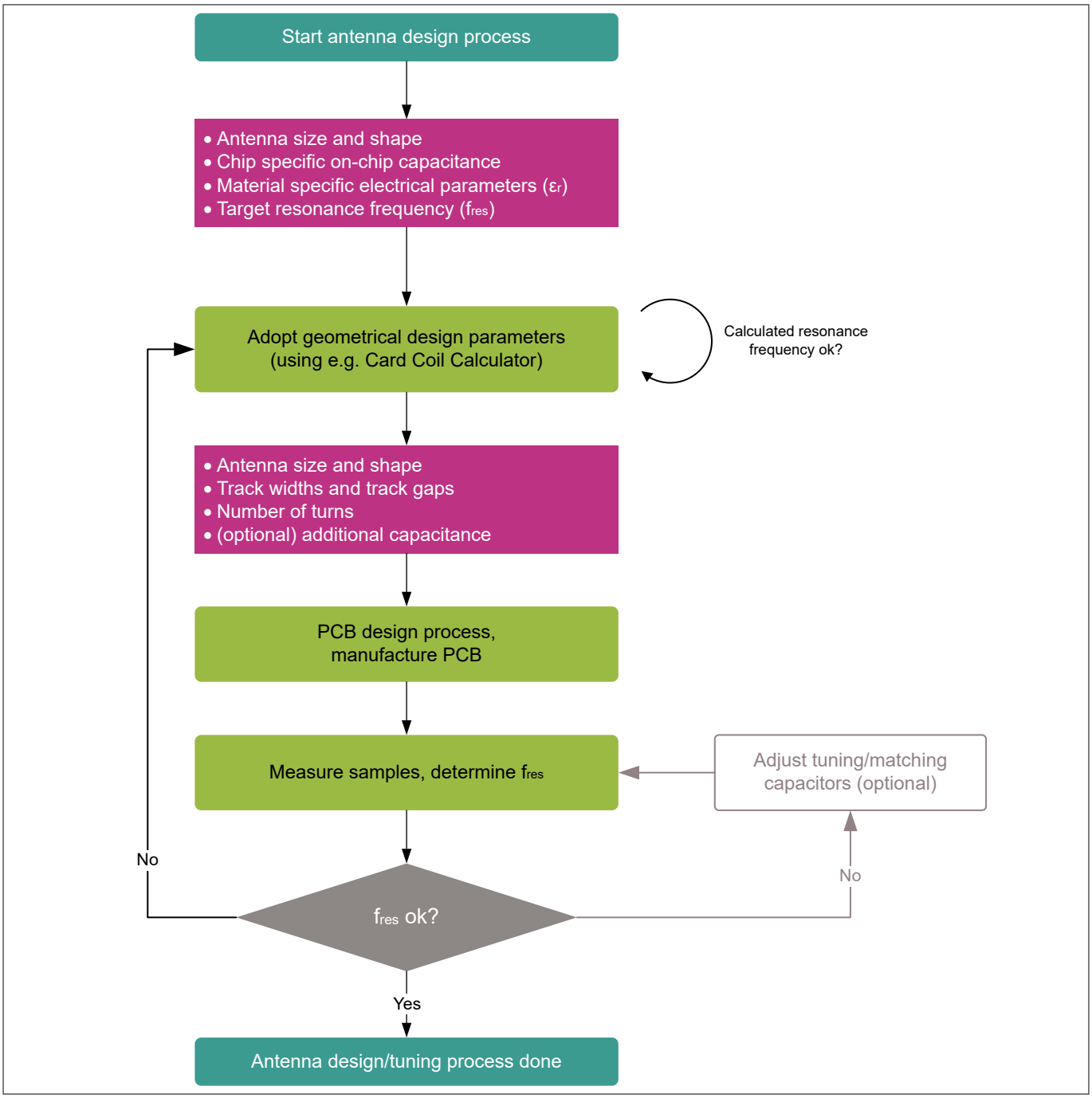

Figure 8 Antenna design flow

The following are the general recommendations for the antenna design:

1. The resulting f_{res} (threshold condition) must be slightly higher than 13.56 MHz in order to reduce the influence on the minimal operating field strength H_{min} (impacts the contactless communication distance)
2. External elements such as capacitor C_p (between L_A and L_B) can be used to compensate deviations from the target resonance frequency

4 Design examples

The OPTIGA™ Authenticate NBT is available in a PG-USON-8-8 package and comes with a nominal on-chip capacitance of 78 pF. The on-chip capacitance value is an important input parameter for the antenna design process.

***Note**: The following design examples are based on Class definitions of the ISO/IEC 14443-1 standard. For more details, refer to [1].*

4.1 Class 5 sized antenna

A Class 5 PCB antenna with dimensions of 23.5 mm x 40.5 mm is examined, and its contactless performance is evaluated.

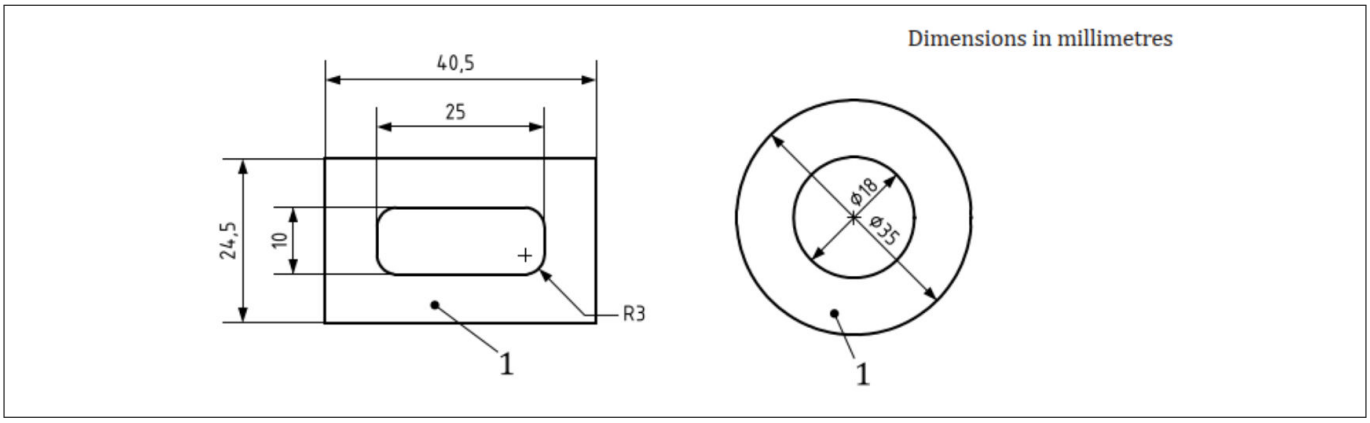

Figure 9 Class 5 antenna, rectangular and circular shapes

4.1.1 Target specification

The following are the target specifications for the Class 5 antenna design example:

- Antenna dimensions: 40.5 mm x 23.5 mm, rectangular, Class 5 (refer to [1])
- Carrier material: FR4, $\varepsilon_r = 4.15$
- Manufacturing technology: Etching
- Antenna material: Copper, 17.5 µm thickness
- Target resonance frequency f_{res}: 13.56 MHz

4.1.2 Calculation with Card Coil Calculator

The Infineon Card Coil Calculator enables the assessment of antenna design parameters. The tool provides a graphical user interface for entering and adjusting physical antenna/coil parameters, such as dimension, technology, and used materials. The coil inductance, capacitance, resistance and the resulting resonance frequency f_{res} of the IC-coil system can be calculated.

***Note**: The tool can be downloaded from the Infineon Developer Center. Refer to [5].*

After downloading, installing and executing the tool, the antenna design process starts by selecting the target device ("NBT 78pF") and the respective package ("PG-USON-8-8"). By selecting the IC, the corresponding value for the on-chip capacitance is already considered for the next design steps.

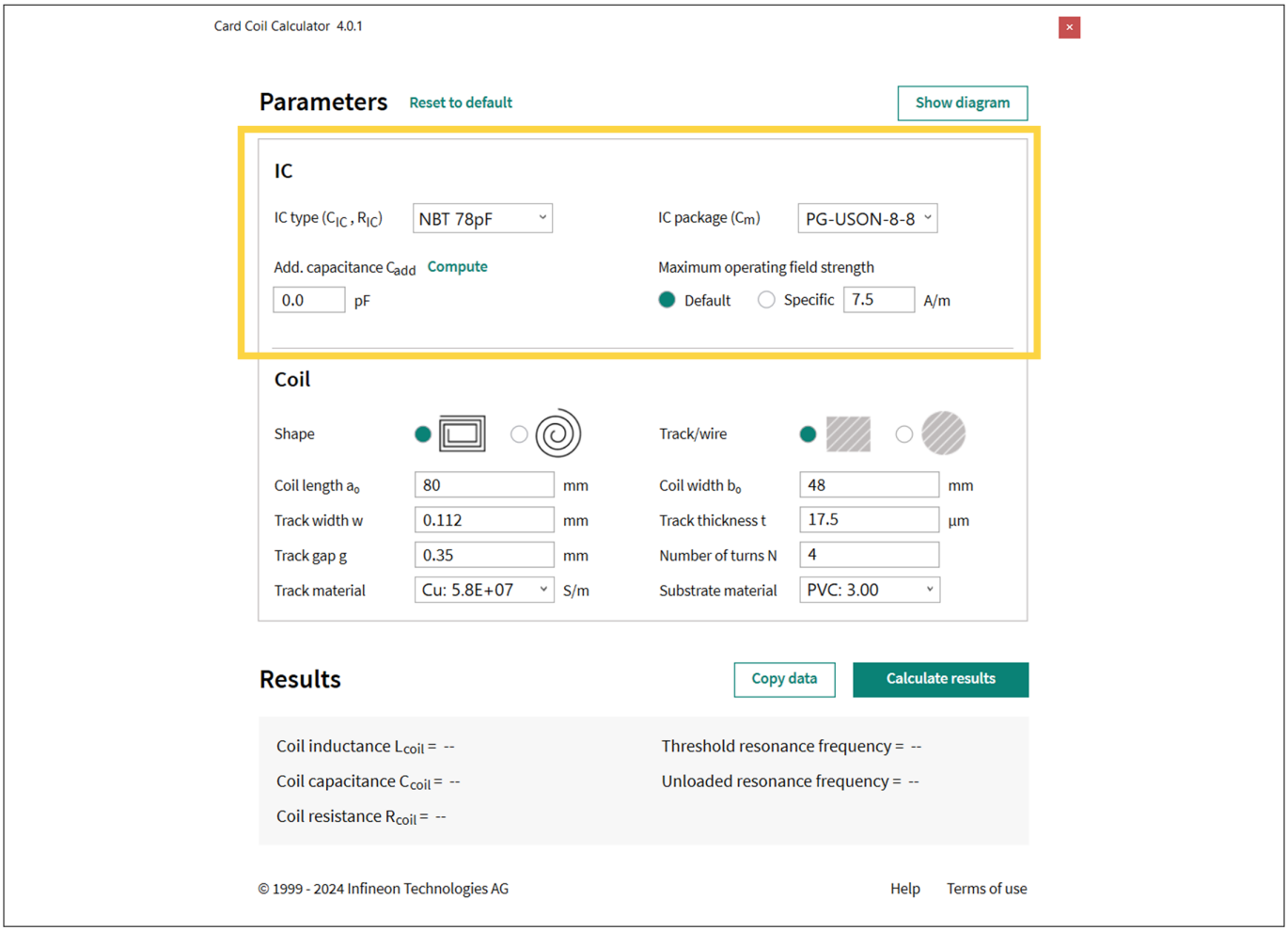

Figure 10 Product and package selection

After selecting the target device, the physical dimensions of the coil covering the length and width of the coil, the width of the track, the gap between the windings, the number of turns, material specific parameter values and the electrical parameters can be entered.

***Note**: The underlying formulas in the Card Coil Calculator are developed to provide the most accurate results for ISO/IEC 14443-1 Class 1 and Class 2 coil sizes (refer to [1]) and less accurate for smaller antenna sizes. Therefore, in order to compensate these shortcomings, 5-10 pF of additional capacitance must be considered for the calculation (C_{add}).*

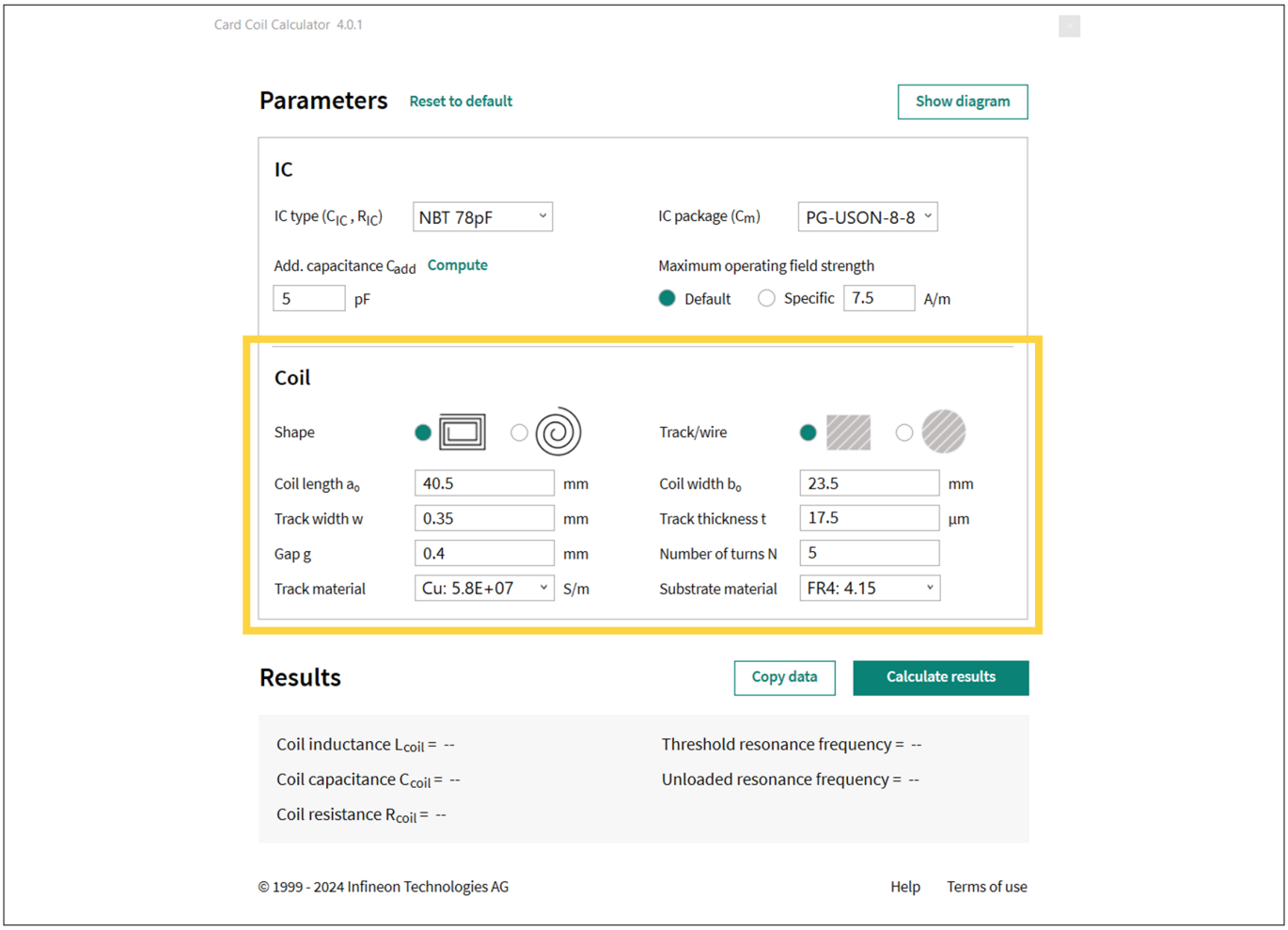

Figure 11 Class 5 antenna physical parameters

By pressing the "Calculate results" button, the electrical parameters of the coil (L_{coil}, C_{coil} and R_{coil}) and the resulting resonance frequency f_{res} (in unloaded and threshold condition) are computed and displayed.

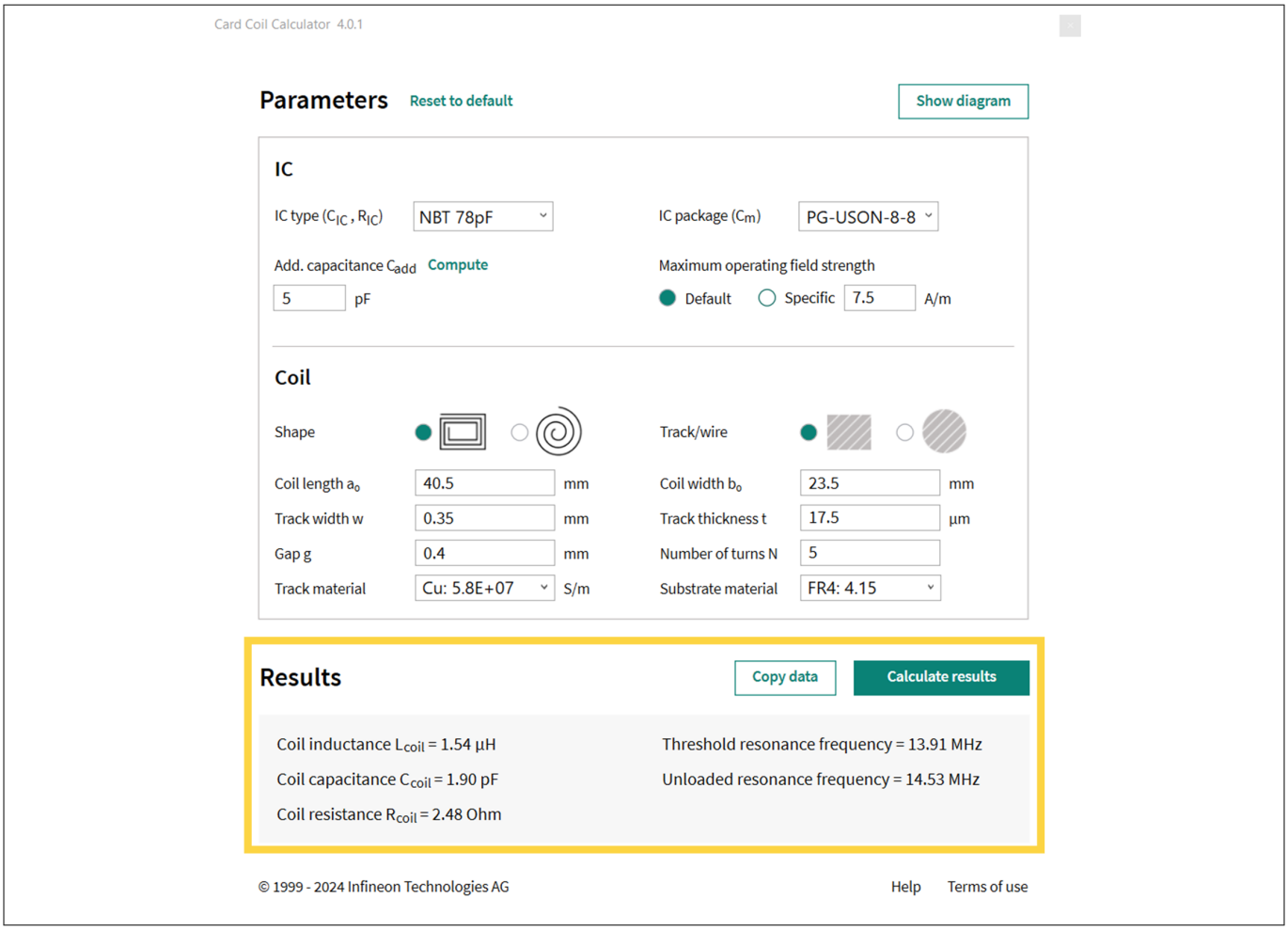

Figure 12 Class 5 antenna electrical parameters

The coil design parameters are determined by iterating the physical parameters for the coil and re-running the calculation. These physical parameters of the coil must be taken into account when designing the antenna on the PCB. When finished, these values can be easily copied in a summarized form to the clipboard ("Copy data" button) for further processing.

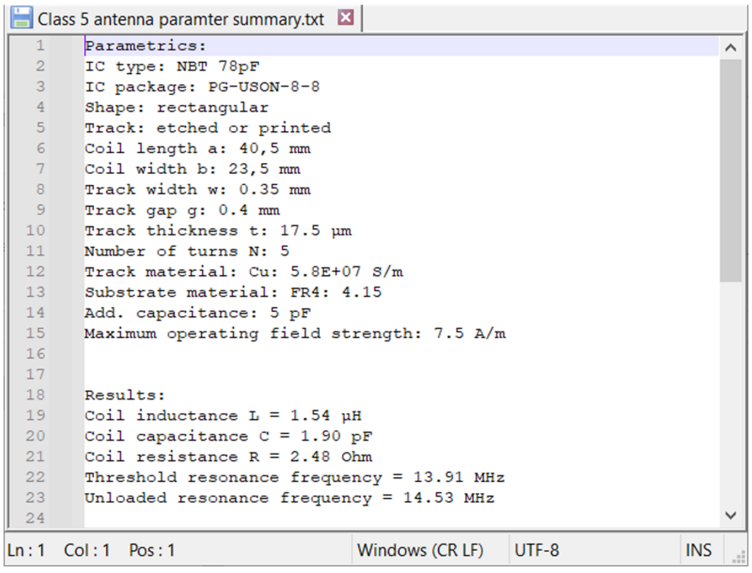

Figure 13 Class 5 antenna parameter summary

4.1.3 Resulting design, Class 5 shield antenna

Figure 14 depicts the Class 5 PCB antenna directly attached to the OPTIGA™ Authenticate NBT Secure Shield.

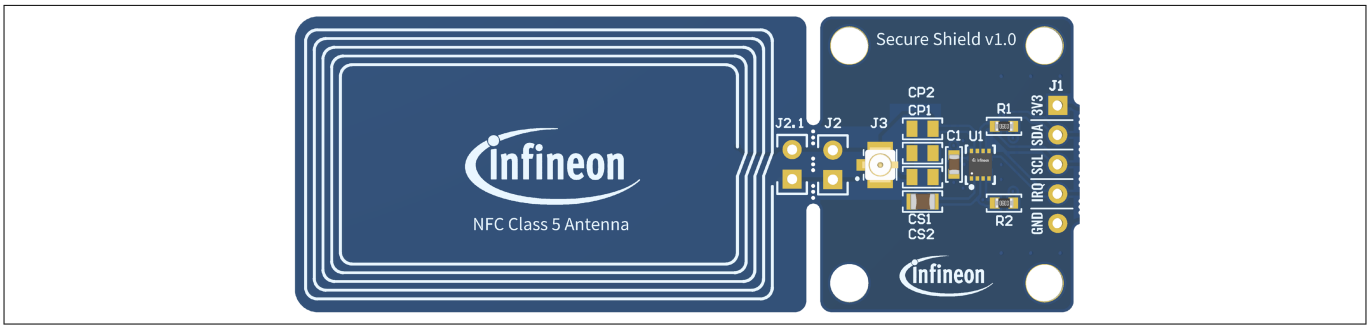

Figure 14 NBT Secure Shield with Class 5 antenna

4.1.4 Verification

After finishing the antenna design and PCB manufacturing processes, the resonance frequency (f_{res}) and minimal field strength (H_{min}) parameters may be determined by measurement. Refer to the recommended target resonance frequency value listed in Table 6.

Table 7 lists the measurements taken for the Class 5 sized antenna connected to the NBT Secure Shield under two conditions: when the OPTIGA™ Authenticate NBT is powered solely from the NFC field of an NFC reader, and when it is supplied power via its power pins.

Table 7 NBT Secure Shield with Class 5 PCB antenna: f_{res} and H_{min}

Power Domain	Antenna	Resonance Frequency f_{res} [MHz]	Typical H_{min} [A/m]
Tag, V_{CC}-powered	Class 5	13,89	0,3
NFC-only tag	Class 5	13,55	0,7

If these measurements reveal significant deviations from the expected value (primarily the resonance frequency), either another iteration of the antenna design process is required, or the target values can be adjusted by adding dedicated tuning capacitors to the antenna, either in parallel (C_P) or in series (C_S), representing a matching circuit.

4.2 Class 6 sized antenna: Shield antenna, flexible mount

A Class 6 PCB antenna with dimensions of 20 mm x 25 mm is examined, and its contactless performance is evaluated. This antenna design example is intended to connect to an OPTIGA™ Authenticate NBT Secure Shield via a 10 cm UMCC cable attached to U.FL connectors on the antenna PCB and the NBT Secure Shield.

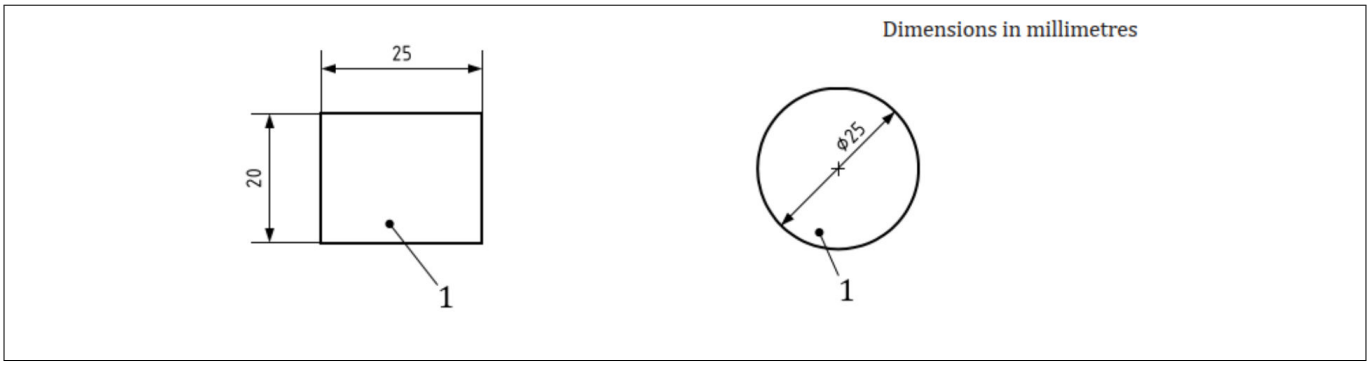

Figure 15 Class 6 antenna, rectangular and circular shapes

4.2.1 Target specification

The following are the target specifications for the design example:

- Antenna dimensions: 20 mm x 25 mm, rectangular, Class 6 (refer to [1])
- Carrier material: FR4, ε_r = 4.15
- Manufacturing technology: Etching
- Antenna material: Copper, 17.5 µm thickness
- Target resonance frequency f_{res}: 13.56 MHz
- Additional capacitance added by the UMCC cable and two U.FL connectors: 16 pF

4.2.2 Calculation with Card Coil Calculator

The design parameters for the Class 6 sized antenna, flexible mount, can be seen in the figure below. The 21 pF value for the additional capacitance C_{add} cover the 10 cm UMCC cable, both U.FL connectors as well as the "compensation" value.

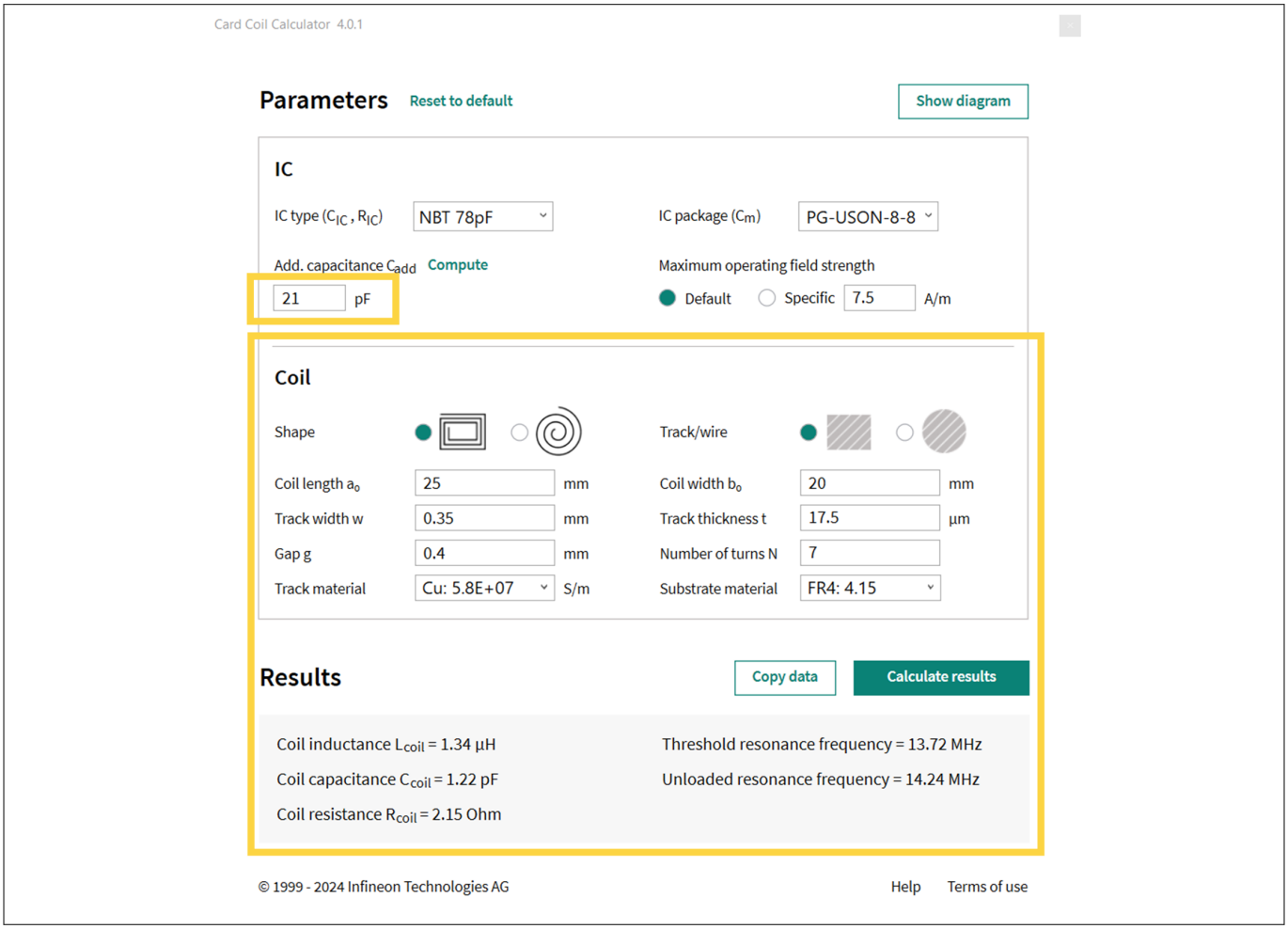

Figure 16 Class 6 antenna physical and electrical parameters flexible mount

4.2.3 Resulting design, Class 6 shield antenna

Figure 17 depicts the Class 6 PCB antenna, which is a component of the OPTIGA™ Authenticate NBT Development Kit and the OPTIGA™ Authenticate NBT Development Shield bundles.

The default configuration of the Class 6 PCB antenna is the "flexible mount configuration". In this case, the antenna uses 7 turns as the solder bridges are closed as illustrated in Figure 17.

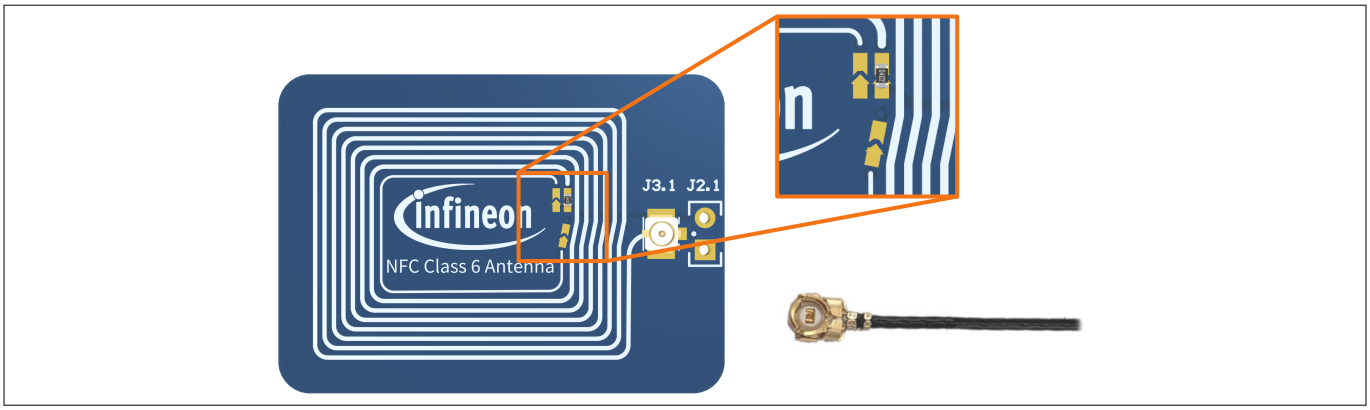

Figure 17 Shield antenna – Class 6 flexible mount (default configuration)

4.2.4 Verification

Table 8 lists the measurements for the Class 6 sized antenna connected to the NBT Secure Shield with the 10 cm UMCC cable, which is a component of the OPTIGA™ Authenticate NBT Development Kit and the OPTIGA™ Authenticate NBT Development Shield bundle.

Table 8 NBT Secure Shield with Class 6 PCB antenna, flexible mount: f_{res} and H_{min}

Power Domain	Antenna	Resonance Frequency f_{res} [MHz]	Typical H_{min}[A/m]
Tag, V_{CC}-powered	Class 6	13,79	0,4
NFC-only tag	Class 6	13,45	1,1

4.3 Class 6 sized antenna: Shield antenna, direct mount

A Class 6 PCB antenna with dimensions of 20 mm x 25 mm is designed, examined, and its contactless performance is evaluated. This antenna design example is intended to be directly connected/mounted to an OPTIGA™ Authenticate NBT Secure Shield via a pin header.

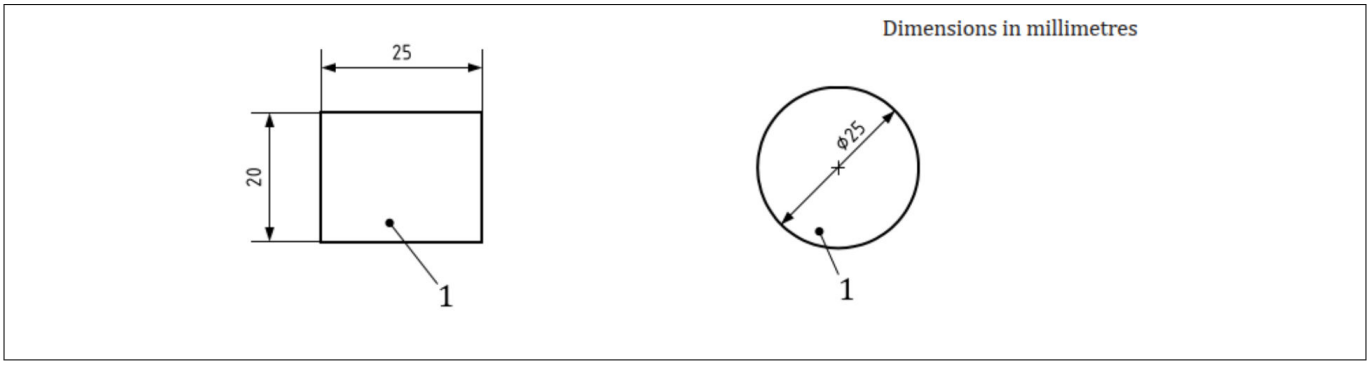

Figure 18 Class 6 antenna, rectangular and circular shapes

4.3.1 Target specification

The following are the target specifications for the design example:

- Antenna dimensions: 20 mm x 25 mm, rectangular, Class 6 (refer to [1])
- Carrier material: FR4, $\varepsilon_r = 4.15$
- Manufacturing technology: Etching
- Antenna material: Copper, 17.5 µm thickness
- Target resonance frequency f_{res}: 13.56 MHz

4.3.2 Calculation with Card Coil Calculator

The design parameters for the Class 6 sized antenna, direct mount can be seen in the figure below. Compared to the flexible mount example, in this scenario the UMCC cable as well as the two U.FL connectors do not need to be considered for the calculation. Hence, a lower additional capacitance value is factored in.

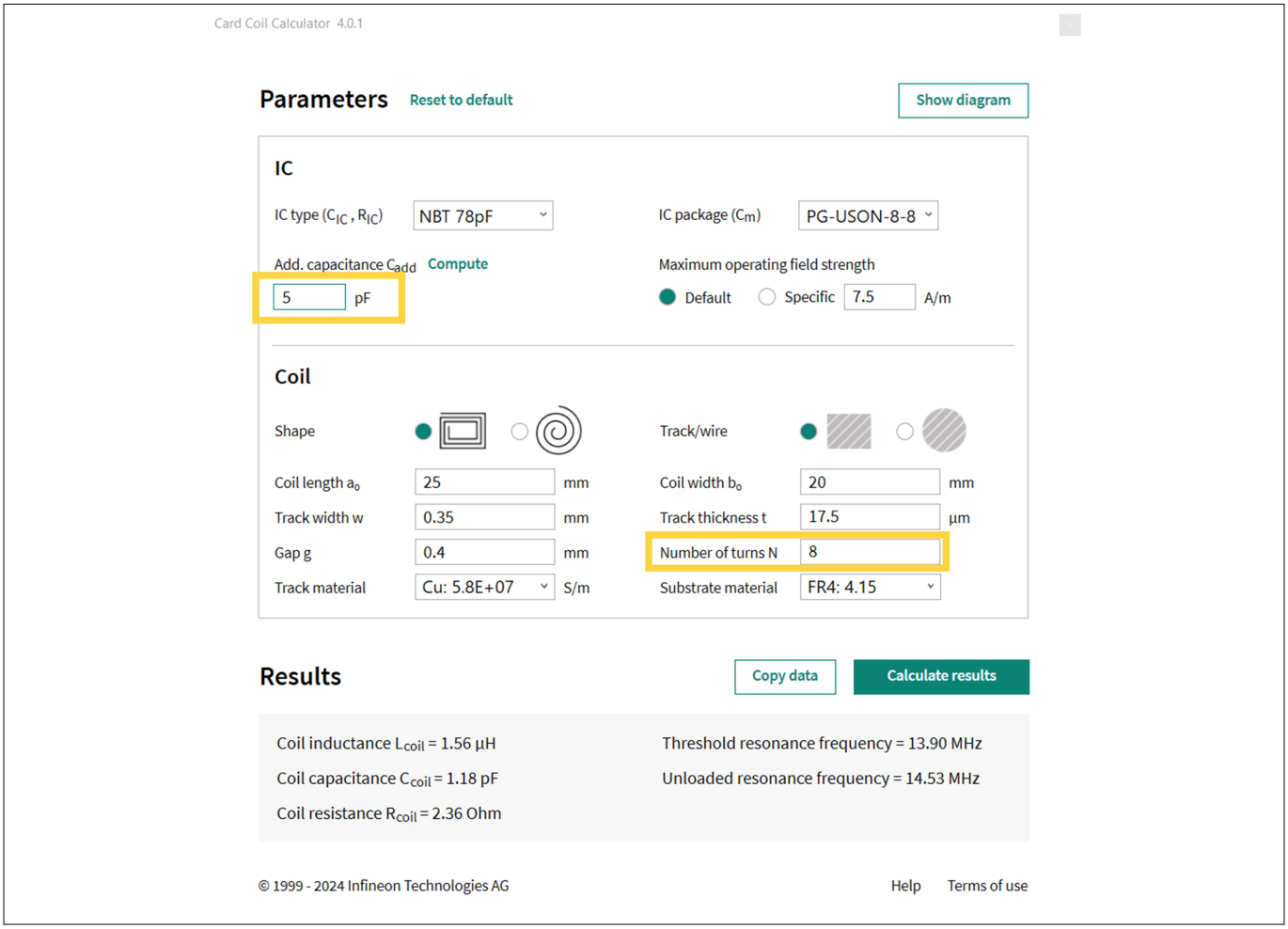

Figure 19 Class 6 antenna physical and electrical parameters direct mount

4.3.3 Resulting design, Class 6 shield antenna

Figure 20 depicts the Class 6 PCB antenna with the "direct mount configuration" from the OPTIGA™ Authenticate NBT Development Kit and the OPTIGA™ Authenticate NBT Development Shield bundle.

When connecting the antenna via the two-pin connector ("direct mount") rather than the UMCC cable ("flexible mount"), this reduces detuning of the system's resonance frequency. The "direct mount configuration" requires an additional turn, which is activated by closing the dedicated solder bridges (see Figure 20).

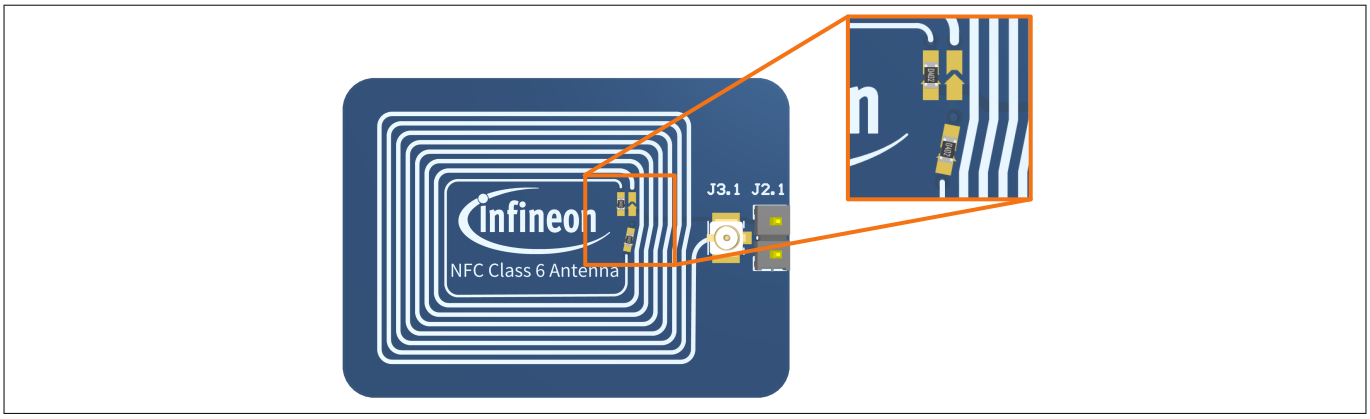

Figure 20 **Shield antenna – Class 6 direct mount**

***Note**: The Class 6 antenna designs, "flexible mount" and "direct mount", are combined in a single shield antenna. The primary difference is the number of turns required to adjust the coil inductance. To implement such a combined design, dedicated solder bridges are integrated into the antenna.*

4.3.4 Verification

The measurements with the OPTIGA™ Authenticate NBT Secure Shield and the Class 6 sized antenna directly mounted onto it, are listed in Table 9.

It is important that the solder bridges on the antenna board are closed, as illustrated in Figure 20.

Table 9 **NBT Secure Shield with Class 6 PCB antenna, direct mount: f_{res} and H_{min}**

Power Domain	Antenna	Resonance Frequency f_{res} [MHz]	Typical H_{min}[A/m]
Tag, V_{CC}-powered	Class 6	13,88	0,4
NFC-only tag	Class 6	13,59	1,2

4.4 Class 6 sized antenna: 20mm x 20mm

In this section, a design example with dimensions of 20 mm x 20 mm is calculated.

4.4.1 Target specification

The following are the target specifications for the design example:

- Antenna dimensions: 20 mm x 20 mm, square, Class 6
- Carrier material: FR4, $\varepsilon_r = 4.15$
- Manufacturing technology: Etching
- Antenna material: Copper, 17.5 µm thickness
- Target resonance frequency f_{res}: 13.56 MHz

4.4.2 Calculation with Card Coil Calculator

The design parameters for the 20 mm x 20 mm sized antenna can be seen in the figure below.

4 Design examples

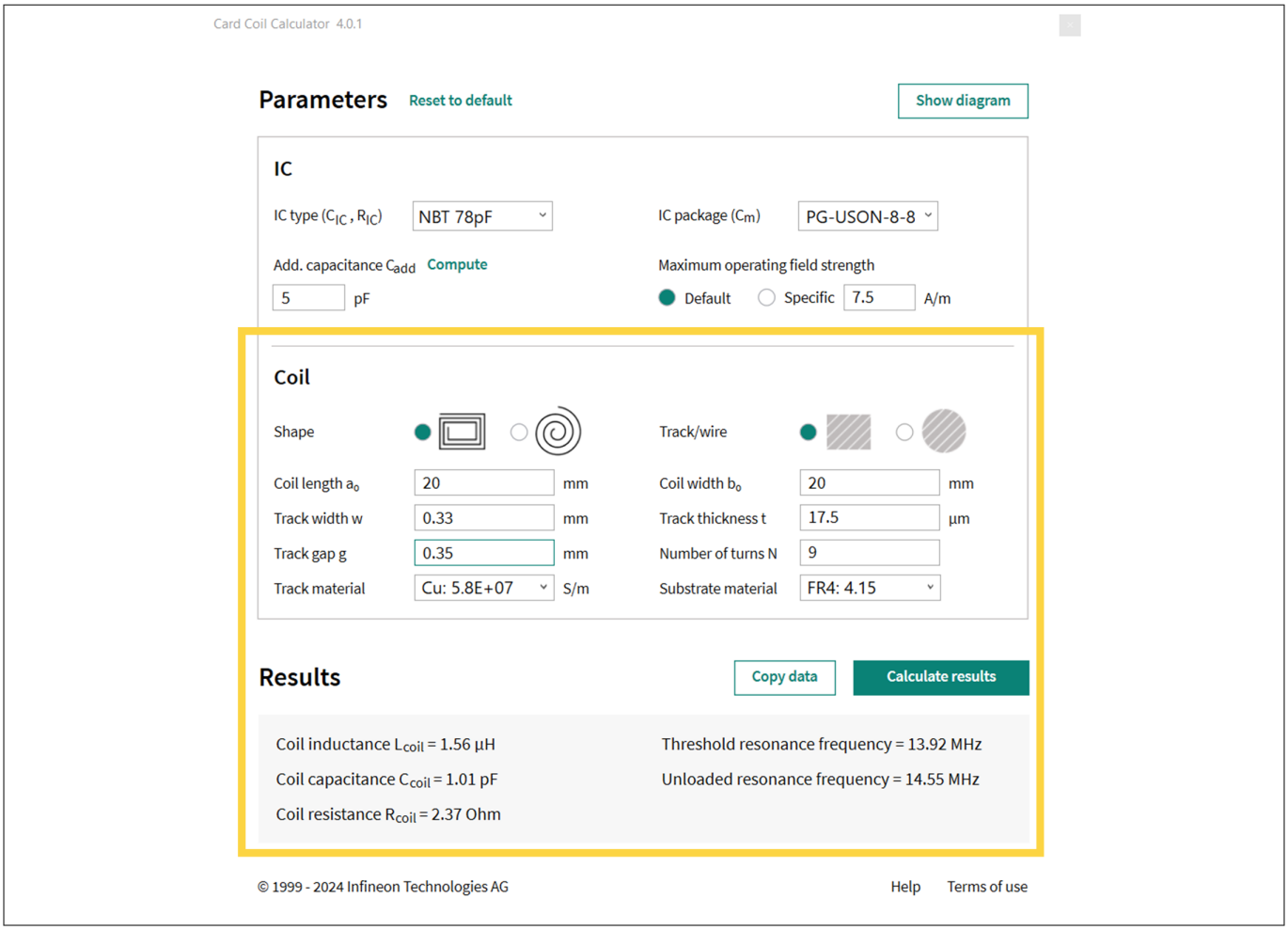

Figure 21 20 mm x 20 mm antenna physical and electrical parameters

5 Power matching

The power matching circuitry optimizes the transfer of energy from the antenna to the OPTIGA™ Authenticate NBT tag. A power matching network is placed between the IC and the antenna in a typical NFC system. It is generally made up of two capacitors: serial (C_S) and parallel (C_P). While both C_P and C_S provide an effect on the overall system, C_P is used to adjust the resonance frequency and C_S is used for coil impedance matching. Since the coil is designed to be adaptable, power matching takes place on the IC side. Either the C_P or the C_S can be connected to the IC first, resulting in two matching topologies: "parallel first" and "serial first".

Depending on the application, designers can use a "parallel first" or "serial first" matching topology.

5.1 Power matching with “serial first”

The "serial first" matching topology utilizes smaller external capacitors (related to capacitance, as well as physical form factor).Figure 22 depicts an equivalent circuit of power matching with “serial first”.

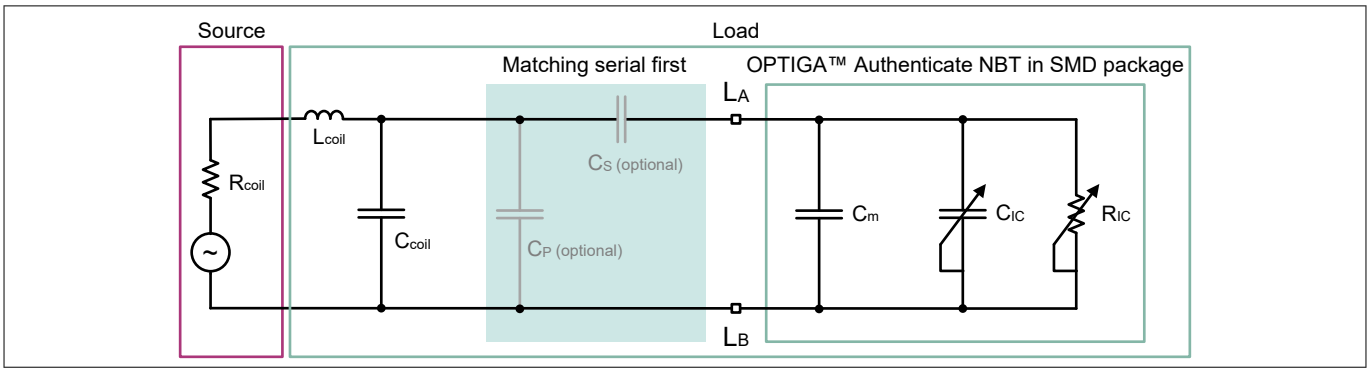

Figure 22 Equivalent circuit of power matching with “serial first”

5.2 Power matching with “parallel first”

The "parallel first" matching topology requires significantly higher capacitance values. The high capacitor values used in the "parallel first" matching method reduce the matching procedure's dependence on C_{IC} variation due to SMD component tolerances and manufacturing process. It should be noted that, while other definitions for the resonance frequency f_{res} exist, the method remains the same only the resonance criterion must be changed.Figure 23 depicts an equivalent circuit of power matching with “parallel first”.

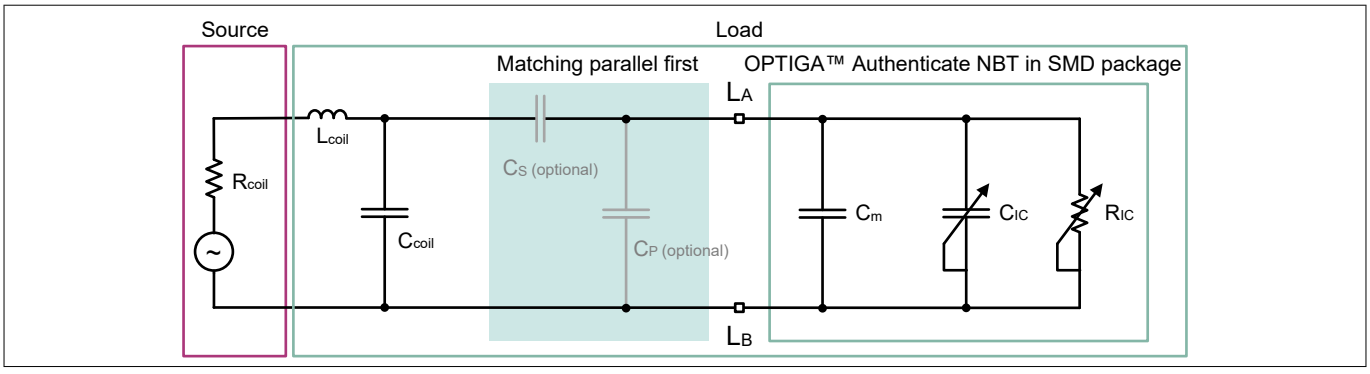

Figure 23 Equivalent circuit of power matching with “parallel first”

References

ISO/IEC

[1] ISO/IEC 14443-1:2018: *Cards and security devices for personal identification - Contactless proximity objects - Part 1: Physical characteristics (Fourth edition)*; 2018-04

Infineon

[2] Infineon Technologies AG: *OPTIGA™ Authenticate NBT, product website* - https://www.infineon.com/OPTIGA-Authenticate-NBT
[3] Infineon Technologies AG: *OPTIGA™ Authenticate NBT, Release Notes (latest revision)*
[4] Infineon Technologies AG: *OPTIGA™ Authenticate NBT, Extended Datasheet (latest revision)*
[5] Infineon Technologies: *Infineon Developer Center, Infineon Card Coil Calculator 4.0* - https://softwaretools.infineon.com/tools/com.ifx.tb.tool.infineoncardcoilcalculator

Glossary

I2C
inter-integrated circuit (I2C)

IEC
International Electrotechnical Commission (IEC)
The international committee responsible for drawing up electrotechnical standards.

ISO
International Organization for Standardization (ISO)

MCU
microcontroller unit (MCU)
One or more processor cores along with memory and programmable input/output peripherals.

NFC
near field communication (NFC)

PCB
printed circuit board (PCB)

SMD
surface-mounted device (SMD)

UMCC
ultraminiature coax connector (UMCC)

Revision history

Reference	Description
Revision 2.1, 2024-04-26	
All	Editorial changes
Revision 2.0, 2024-03-28	
All	Major customer release
Revision 1.1, 2023-07-07	
All	Editorial changes
Revision 1.0, 2023-05-12	
All	Initial release

Trademarks

All referenced product or service names and trademarks are the property of their respective owners.

Edition 2024-04-26

Published by

Infineon Technologies AG

81726 Munich, Germany

© 2024 Infineon Technologies AG

All Rights Reserved.

Do you have a question about any aspect of this document?

Email:
CSSCustomerService@infineon.com

Document reference
IFX-ivg1681883380012

Important notice

The information given in this document shall in no event be regarded as a guarantee of conditions or characteristics ("Beschaffenheitsgarantie").

With respect to any examples, hints or any typical values stated herein and/or any information regarding the application of the product, Infineon Technologies hereby disclaims any and all warranties and liabilities of any kind, including without limitation warranties of non-infringement of intellectual property rights of any third party.

In addition, any information given in this document is subject to customer's compliance with its obligations stated in this document and any applicable legal requirements, norms and standards concerning customer's products and any use of the product of Infineon Technologies in customer's applications.

The data contained in this document is exclusively intended for technically trained staff. It is the responsibility of customer's technical departments to evaluate the suitability of the product for the intended application and the completeness of the product information given in this document with respect to such application.

Warnings

Due to technical requirements products may contain dangerous substances. For information on the types in question please contact your nearest Infineon Technologies office.

Except as otherwise explicitly approved by Infineon Technologies in a written document signed by authorized representatives of Infineon Technologies, Infineon Technologies' products may not be used in any applications where a failure of the product or any consequences of the use thereof can reasonably be expected to result in personal injury.