Please note that Cypress is an Infineon Technologies Company.
The document following this cover page is marked as “Cypress” document as this is the company that originally developed the product. Please note that Infineon will continue to offer the product to new and existing customers as part of the Infineon product portfolio.

Continuity of document content
The fact that Infineon offers the following product as part of the Infineon product portfolio does not lead to any changes to this document. Future revisions will occur when appropriate, and any changes will be set out on the document history page.

Continuity of ordering part numbers
Infineon continues to support existing part numbers. Please continue to use the ordering part numbers listed in the datasheet for ordering.

MB2146-401

F²MC-8FX Family Evaluation Board Operation Guide

Doc. # 002-07324 Rev. *A

Cypress Semiconductor
198 Champion Court
San Jose, CA 95134-1709
Phone (USA): 800.858.1810
Phone (Intnl): +1.408.943.2600
www.cypress.com

Copyrights

© Cypress Semiconductor Corporation, 2004-2016. This document is the property of Cypress Semiconductor Corporation and its subsidiaries, including Spansion LLC (“Cypress”). This document, including any software or firmware included or referenced in this document (“Software”), is owned by Cypress under the intellectual property laws and treaties of the United States and other countries worldwide. Cypress reserves all rights under such laws and treaties and does not, except as specifically stated in this paragraph, grant any license under its patents, copyrights, trademarks, or other intellectual property rights. If the Software is not accompanied by a license agreement and you do not otherwise have a written agreement with Cypress governing the use of the Software, then Cypress hereby grants you a personal, non-exclusive, nontransferable license (without the right to sublicense) (1) under its copyright rights in the Software (a) for Software provided in source code form, to modify and reproduce the Software solely for use with Cypress hardware products, only internally within your organization, and (b) to distribute the Software in binary code form externally to end users (either directly or indirectly through resellers and distributors), solely for use on Cypress hardware product units, and (2) under those claims of Cypress's patents that are infringed by the Software (as provided by Cypress, unmodified) to make, use, distribute, and import the Software solely for use with Cypress hardware products. Any other use, reproduction, modification, translation, or compilation of the Software is prohibited.

TO THE EXTENT PERMITTED BY APPLICABLE LAW, CYPRESS MAKES NO WARRANTY OF ANY KIND, EXPRESS OR IMPLIED, WITH REGARD TO THIS DOCUMENT OR ANY SOFTWARE OR ACCOMPANYING HARDWARE, INCLUDING, BUT NOT LIMITED TO, THE IMPLIED WARRANTIES OF MERCHANTABILITY AND FITNESS FOR A PARTICULAR PURPOSE. To the extent permitted by applicable law, Cypress reserves the right to make changes to this document without further notice. Cypress does not assume any liability arising out of the application or use of any product or circuit described in this document. Any information provided in this document, including any sample design information or programming code, is provided only for reference purposes. It is the responsibility of the user of this document to properly design, program, and test the functionality and safety of any application made of this information and any resulting product. Cypress products are not designed, intended, or authorized for use as critical components in systems designed or intended for the operation of weapons, weapons systems, nuclear installations, life-support devices or systems, other medical devices or systems (including resuscitation equipment and surgical implants), pollution control or hazardous substances management, or other uses where the failure of the device or system could cause personal injury, death, or property damage (“Unintended Uses”). A critical component is any component of a device or system whose failure to perform can be reasonably expected to cause the failure of the device or system, or to affect its safety or effectiveness. Cypress is not liable, in whole or in part, and you shall and hereby do release Cypress from any claim, damage, or other liability arising from or related to all Unintended Uses of Cypress products. You shall indemnify and hold Cypress harmless from and against all claims, costs, damages, and other liabilities, including claims for personal injury or death, arising from or related to any Unintended Uses of Cypress products.

Cypress, the Cypress logo, Spansion, the Spansion logo, and combinations thereof, PSoC, CapSense, EZ-USB, F-RAM, and Traveo are trademarks or registered trademarks of Cypress in the United States and other countries. For a more complete list of Cypress trademarks, visit cypress.com. Other names and brands may be claimed as property of their respective owners.

Preface

Thank you for purchasing the evaluation board (Part number:MB2146-401) for the F^2MC -8FX family.

The MB 2146-401 is a development support tool for developing and evaluating applied products based on the F^2MC-8FX* family of the 8-bit microcontroller manufactured by Cypress.

This manual is intended for engineers who use the MB2146-401(hereafter called the evaluation board)to develop applied products based on Cypress F^2MC-8FX family of the 8-bit microcontroller.

The manual describes how to handle the evaluation board and its function and setting procedures.

Be sure to read it before using the evaluation board.

Consult the Sales representatives or the Support representatives of Cypress Limited for mass-produced MCUs and evaluation MCUs.

*: Henceforth, Evaluation MCU is called.

- Using the product Safety

This manual contains important information required for using the MB2146-401 safely. Be sure to read through the manual before using the product and follow the instructions contained therein to use it correctly.

In particular, carefully read “Caution of the products described in this document” at the beginning of this manual to understand the requirements for safe use of the product before using it.

After reading the manual, keep it handy for future reference.

- Warranty and Liability Disclaimers

The specifications of the product are subject to change without notice.

In no event shall Cypress be liable for any loss or damages whatsoever directly or indirectly arising out of the use of the product.

- Product Operating Environment

Use the product at an operating temperature between 5°C to 35°C and at an operating humidity between 20% to 80%. Avoid using it in a hot or humid environment and prevent condensation.

The product is a frameless PC board unit with all electronic components exposed. Therefore, neither put anything on the product nor touch or let an electrically charged material contact a metal part of it. Once the product has been powered, try to keep those objects away from it which can short-circuit it or easily catch fire and burn. Use the product as horizontal as possible and avoid operating it at a place exposed to strong vibration, dust, or explosive gas.

Note that using the product not in the above operating environment may unexpectedly cause personal injury to the user (or another person if present near the product) or physical damage to properties around the product.

You should also keep the packaging materials used for shipping the product. They work well as they are when you transport the product again, for example, if it becomes out of order and needs to be repaired.

- Caution of the product described in this manual

The following precautions apply to the product described in this manual.

WARNING	Indicates a potentially hazardous situation which, if not avoided appropriately, could result in death or serious injury and/or a fault in the user's system..

Electric shock, Damage	Before performing any operation described in this manual, turn off all the power supplies to the system. Performing such an operation with the power on may cause an electric shock or device fault.
Electric shock, Damage	Once the product has been turned on, do not touch any metal part of it. Doing so may cause an electric shock or device fault.

CAUTION	Indicates a potentially hazardous situation which, if not avoided appropriately, may result in minor or moderate injury and/or damage to the product or the equipment to which the product is connected, to software resources such as data, or to other properties.

Cuts, Damage	Before moving the product, be sure to turn off all the power supplies and unplug the cables. Watch your step when carrying the product. Do not use the product in an unstable location such as a place exposed to strong vibration or a sloping surface. Doing so may cause the product to fall, resulting in an injury or fault.
Cuts	The product has some sharp-pointed or edged parts inevitably exposed, such as jumper plugs. Use meticulous care in handling the product not to get injured with such pointed parts.
Damage	Neither put anything on or apply shock to the product. Once the product has been powered, do not carry it. Doing either may cause a fault due to a load or shock.
Damage	Since the product contains many electronic components, keep it away from direct sunlight, high temperature, and high humidity to prevent condensation. Do not use or store the product where it is exposed to much dust or a strong magnetic or electric field for an extended period of time. An adverse operating or storage environment can cause a fault.
Damage	Use the product within the ranges given in the specifications. Operation over the specified ranges may cause a fault.
Damage	To prevent electrostatic breakdown, do not let your finger or an object touch any metal part of the connector. Before handling the product, touch a metal object (such as a door knob) to discharge static electricity from your body.

Damage	When turning the power on or off, follow the relevant procedure described in this document. Before turning the power on, in particular, be sure to finish making all the required connections. To set up and use the product, follow the instructions given in this document. Using the product incorrectly or inappropriately may cause a fault.
Damage	Before plugging or unplugging any cable for this product, be sure to turn the power supply off. When unplugging the cable, remove it while holding the connector without pulling the cable itself. Pulling the cable itself or bending it may expose or disconnect the cable core, resulting in a fault.
Damage	Although the MCU socket is structured not to accept an evaluation MCU in a wrong orientation or position, pay due attention to the mounting orientation when mounting the evaluation MCU. Forcing the evaluation MCU to be inserted in a wrong orientation can damage the pins of the evaluation MCU and the accidental insertion prevention mechanism of the socket, resulting in a fault.
Damage	When stored, the product should be kept in its packaging box as it has no housing. Re-transporting the product may damage it to cause a fault. Keep the packaging materials used for shipment of the product and use them when re-transporting it.

Contents

1. Product outline **7**

1.1 Product composition 8
1.2 Appearance and part name 9

2. Checking the Delivered Product **10**

3. Connecting **11**

3.1 Attachment of a MCU board / AC adapter 11
3.2 Note on use 12

4. Board Setup/Function **13**

4.1 Power supply from AC adapter 13
4.2 Power supply from the external power supply input terminal 13
4.3 LED port selection 14
4.4 Selection of 5 V/3.3 V power supply 15
4.5 How to supply VCC of this board to the AVCC terminal of evaluation MCU 15
4.6 How to supply VCC of this board to the AVR terminal of evaluation MCU 15
4.7 How to supply VCC of this board to the AVCC terminal and AVR terminal of evaluation MCU 15
4.8 Selection of the supply level to the MOD terminal of evaluation MCU 16
4.9 Connection of the capacitor between the Cpin terminal and the VSS terminal of evaluation MCU 16
4.10 Reset of this board and evaluation MCU 16
4.11 POWER LED (LED17) 16
4.12 Series regulator 5V -> 3.3V (U7) 16

5. Specification **17**

5.1 General specification 17
5.2 Functional block diagram 18
5.3 Main component material 19
5.4 MCU board I/F connector (CN1/CN2/CN5) 20
5.5 The I/F connector for extension (CN4) 22
5.6 Through evaluation MCU all hole for a terminal check (U1) 23
5.7 Product selection correspondence evaluation MCU all the terminal for a terminal check 25
5.8 Circuit diagram 35

Revision History **39**

1. Product outline

This product is a development support tool for performing the development and evaluation of an application product which used F^{2}MC-8FX family of Cypress 8 bit microcontroller.

By connecting the MCU board (Part number : MB 2146-3xx) on which evaluation MCU was mounted, it is the evaluation board which enables verification of the evaluation MCU before user systems development of operation, and development evaluation of a firmware (This board is called henceforth).

To build an F^{2}MC-8FX family evaluation enviroment,combine three products : This board, MCU board and BGM adapter (Part number : MB2146-09) .

For more information please visit our following websites:

http://www.cypress.com/documentation/development-kitsboards/mb2146-401

http://www.cypress.com/documentation/development-kitsboards/mb2146-09a-e

http://www.cypress.com/documentation/development-kitsboards/mb2146-301a-e

http://www.cypress.com/documentation/development-kitsboards/mb2146-303a-e

Figure 1-1. System configuration figure

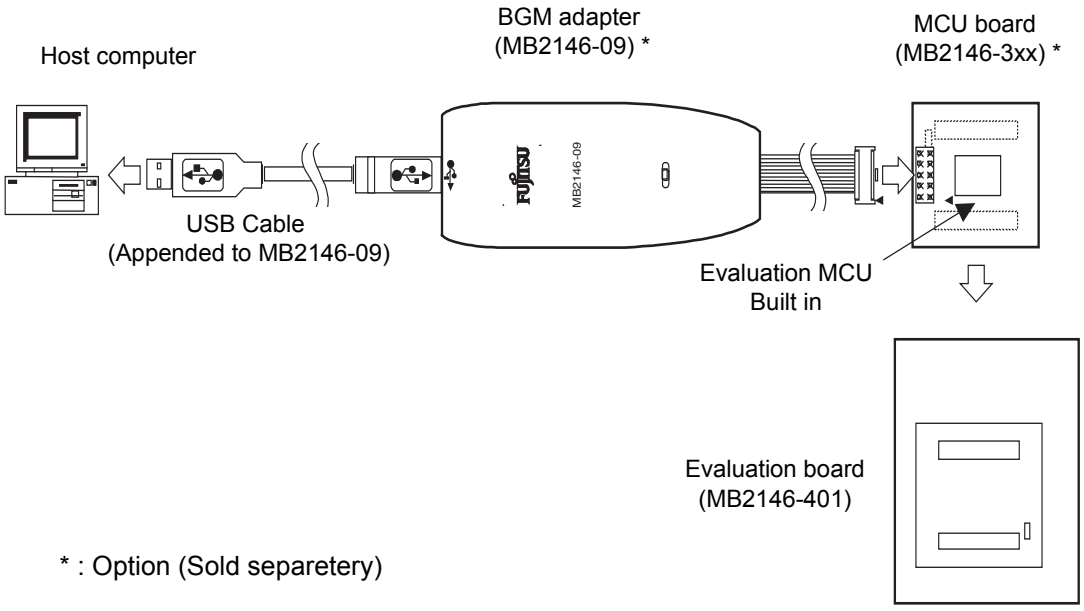

1.1 Product composition

The product composition of this board is shown in Table 1-1, and an option (sold separately) is shown in
Table 1-2.

Table 1-1. Product composition

Name	Part number	Description	Remarks
F^2MC-8FX Evaluation board	MB2146-401	Evaluation MCU not built in	—
AC adapter (Denshi Tsusho.co)	3A-211DA-05	Input power supply : AC100 V-240 V, 50/60 Hz Output power supply : DC5V 4A	Include

Table 1-2. Option(Sold separately)

Name	Part number	Description	Remarks
MCU board	MB2146-3xx	MB95FV100-xxx built in	F^2MC-8FX *

*: Please refer to a data sheet and a hardware manual about Evaluation MCU.

1.2 Appearance and part name

The name and dimensions of the appearance of this board and each part are shown.

Figure 1-2. Functional name and dimensions

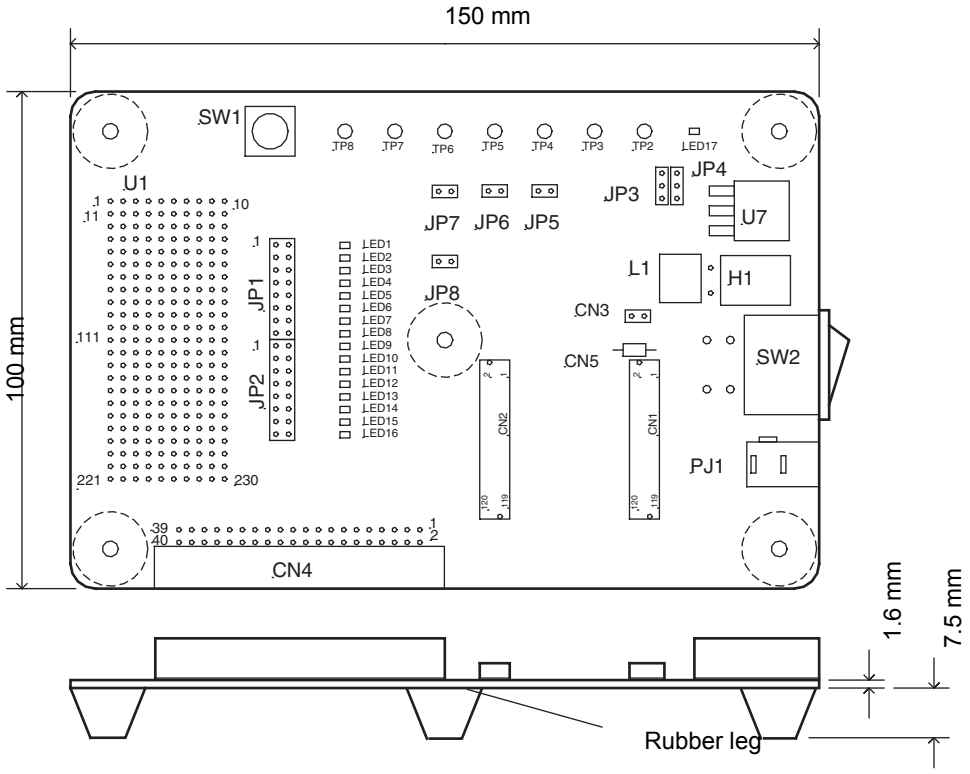

TP2 - TP8	: External power supply input terminal
JP1/JP2	: LED connection change jumper plug
JP3/JP4	: 5 V/3.3 V power supply selection jumper plug
JP5	: AVCC VCC supply jumper plug
JP6	: AVR VCC supply jumper plug
JP7	: AVSS - VSS connection jumper plug
JP8	: MOD selecter jumper plug
CN1/CN2	: MCU board I/F connector
CN3	: C pin socket
CN4	: For extension I/F connector
CN5	: Incorrect insertion prevention socket
LED1 - LED16	: LED port
LED17	: POWER LED (The light is switched on by VCC power supply supply.)
U1	: Evaluation MCU all the through holes for a terminal check
U7	: Series regulator (5 V -> 3.3 V)
SW1	: Reset switch (This board/Evaluation MCU reset)
SW2	: AC adapter power supply switch
PJ1	: AC adapter pin jack
L1	: AC adapter side coil
H1	: AC adapter side poly switch

2. Checking the Delivered Product

Before using the Evaluation board,confirm that the following components are included in the box:

Evaluation board	: 1
AC adaputer *	: 1
Operation manual (Japanese, English (this manual))	: 1 (part each)

*: 3A-211DA-05 (Denshi Tsusho Co., LTD)

3. Connecting

3.1 Attachment of a MCU board / AC adapter

Please connect CN1/CN2 of the connection of a MCU board with this board, and this board, and CN1/CN2 of a MCU board.Since the incorrect insertion prevention socket of two pins is mounted in this board and the MCU board by each, please become a diagonal position (refer to Figure 3-1) .

The power supply of this board has the method of supplying from attached AC adapter, and the method of supplying from the terminal for an external power supply input.Please connect AC adapter to PJ1 of this board the case where a power supply is supplied, from AC adapter (refer to Figure 3-2) . When you supply from the terminal for an external power supply input, please refer to "4. Board setup/function Power supply from the external power supply input terminal".

Note : Please do not use AC adapter except accessories.

Figure 3-1. MCU board connection

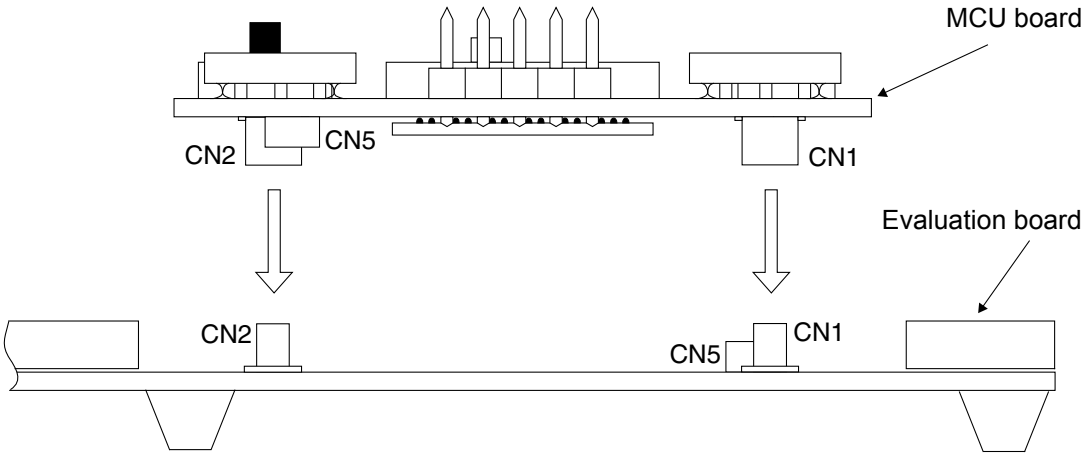

Figure 3-2. AC adapter connection

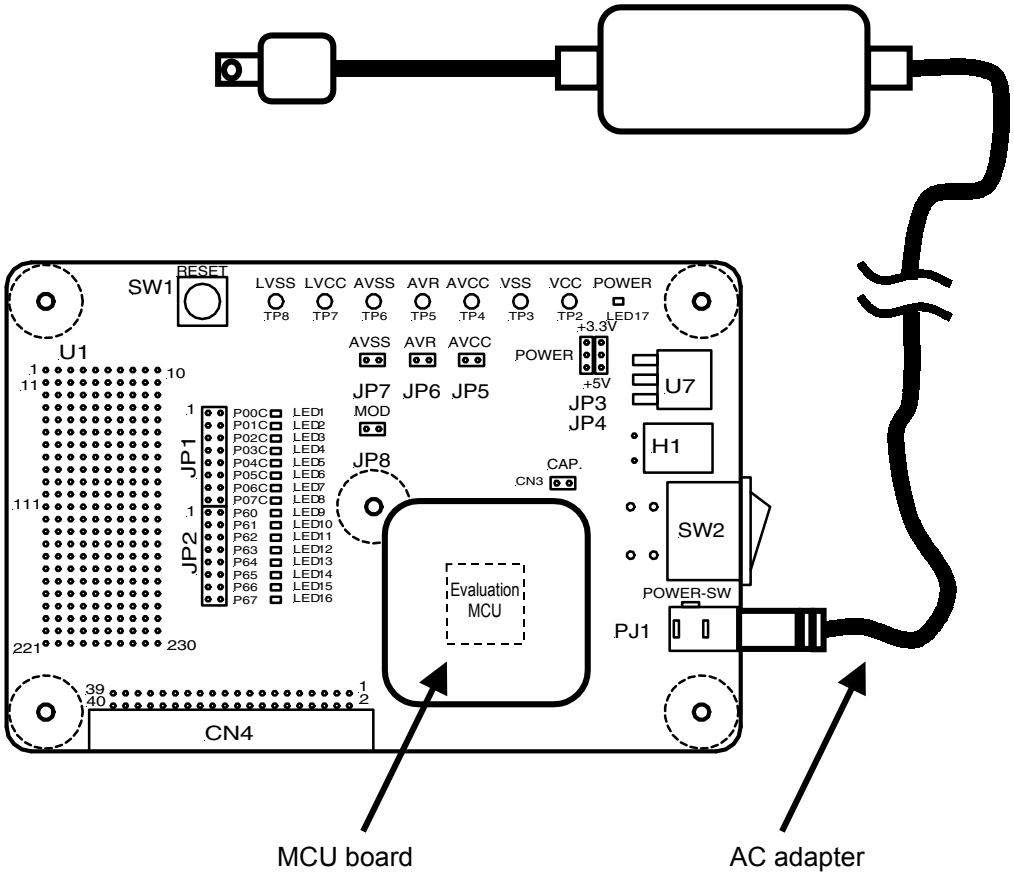

3.2 Note on use

Be careful of the following thing the time of using this board.

- Please do not use AC adapter except accessories.
- When you supply a power supply from AC adapter, terminals TP2 (VCC) and TP3 (VSS) for an external power supply input should presuppose that it is open,and should not supply an external power supply.
- Terminal for an external power supply input When you supply a power supply from TP2 (VCC) and TP3 (VSS), please set SW2 (AC adapter power supply switch) to OFF by setting 5 V/3.3 V power supply selection jumper plug (JP3/JP4) as opening,and use AC adpter side power supply supply, separating it completely
- Be sure to use 5 V/3.3 V power supply selection jumper plug (JP3/JP4) by the same setup. When a different setup is performed, 5 V power supply and 3.3 V power supply may short-circuit, and it may become the cause of incorrect operation.

4. Board Setup/Function

4.1 Power supply from AC adapter

When supplying the power supply from AC adapter, TP2 (VCC) and TP3 (VSS) of the terminal for an external power supply input should presuppose that it is open of it. Moreover, they must not supply an external power supply.

4.2 Power supply from the external power supply input terminal

The details in the case of supplying a power supply from the terminal of an external power supply input (TP2-TP8) are shown in Table 4-1.

When you supply the power supply from the terminals TP2 (VCC) and TP3 (VSS) for an external power supply input, please set the jumper plug (JP3/JP4) of the power supply selection of 5V/3.3V to opening, set SW2 (AC adapter power supply switch) to OFF, separate it completely, and use AC adapter side power supply supply.

Table 4-1. Terminal for external power supply input

Position	Description
TP2	VCC Power supply supply terminal
TP3	VSS Power supply supply terminal
TP4	AVCC Power supply supply terminal
TP5	AVR Power supply supply terminal
TP6	AVSS Power supply supply terminal
TP7	LVCC Power supply supply terminal
TP8	LVSS Power supply supply terminal

4.3 LED port selection

It is decided whether a light emitting diode connection change jumper plug (JP1/JP2) connects the light emitting diode port on this board to each port of the evaluation MCU carried on the MCU board, or it does not carry out.

When using a Light Emitting Diode port,an attached jumper plug is connected to this board. A jumper plug is not connected when not using a light emitting diode port.

About the switch of the state of the terminal of the evaluation MCU port corresponding to each light emitting diode, lighting is deleted on L level. Moreover, lighting has H level given.

Correspondence of a Light Emitting Diode port is shown in Table 4-2.

Table 4-2. Correspondence of LED port

Position		Evaluation MCU port	Light Emitting Diode port
JP1/JP2	Terminal		
JP1	1 - 2	P00C	LED1
JP1	3 - 4	P01C	LED2
JP1	5 - 6	P02C	LED3
JP1	7 - 8	P03C	LED4
JP1	9 - 10	P04C	LED5
JP1	11 - 12	P05C	LED6
JP1	13 - 14	P06C	LED7
JP1	15 - 16	P07C	LED8
JP2	1 - 2	P60	LED9
JP2	3 - 4	P61	LED10
JP2	5 - 6	P62	LED11
JP2	7 - 8	P63	LED12
JP2	9 - 10	P64	LED13
JP2	11 - 12	P65	LED14
JP2	13 - 14	P66	LED15
JP2	15 - 16	P67	LED16

4.4 Selection of 5 V/3.3 V power supply

The details of a setup of 5 V/3.3 V power supply jumper plug selection (JP3/JP4) are shown in Table 4-3. When you supply the power supply from the external power supply input terminals TP2 (VCC) and TP3 (VSS), please open the power supply selection jumper plug (JP3/JP4) of 5 V/3.3 V.

Note : Be sure to give a setup of JP3/JP4 as the same. When a different setup is performed, the power supply which is 5 V/3.3 V short-circuits, and has a possibility of becoming the cause of the operation which is not right, or failure.

Table 4-3. 5 V/3.3 V power supply selection jumper plug

VCC Power supply suply origin	Supply voltage	Setup	
		JP3	JP4
AC adapter	+ 3.3 V	3 - 2	3 - 2
AC adapter	+ 5.0 V	1 - 2	1 - 2
External power supply input terminal	+ 3.3 V	Open	Open
External power supply input terminal	+ 5.0 V	Open	Open

4.5 How to supply VCC of this board to the AVCC terminal of evaluation MCU

When you supply VCC of this board to the analog power supply terminal (AVCC) of Evaluation MCU built in the MCU board,please connect an attachied jumper plug to this board at an AVCC -VCC supply jumper plug (JP5). However, when you supply the AVCC power supply from an external power supply input terminal (AVCC), please give as open.

4.6 How to supply VCC of this board to the AVR terminal of evaluation MCU

When you supply VCC of this board to the analog standard voltage terminal (AVR) of Evaluation MCU built in the MCU board,please connect an attachied jumper plug to this board at an AVR -VCC supply jumper plug (JP6). However, when you supply the AVR standard voltage from an external power supply input terminal (AVR), please give as open.

4.7 How to supply VCC of this board to the AVCC terminal and AVR terminal of evaluation MCU

When you supply VCC of this board to the analog power supply terminal (AVCC) and analog standard voltage terminal (AVR) of Evaluation MCU built in the MCU board,please connect an attachied jumper plug to this board at an AVSS - VSS connection jumper plug (JP7). However, when you supply an AVCC power supply from the terminal (AVCC) for an external power supply input, or when you supply AVR standard voltage from the terminal (AVR) for an external power supply input, be sure to give as open.

4.8 Selection of the supply level to the MOD terminal of evaluation MCU

The supply level to the mode terminal (MOD) of Evaluation MCU carried in the MCU board is chosen with an MOD selection jumper plug (JP8). Details are shown in Table 4-4. Be referred to as "short" of a jumper plug, and give an MOD terminal state as an "L level".

Table 4-4. MOD selection jumper plug

Jumper plug	MOD terminal state	Remarks
Open	H Level	VCC pull-up : Prohibition of a setup
Short	L Level	VSS

4.9 Connection of the capacitor between the Cpin terminal and the VSS terminal of evaluation MCU

Between the Cpin terminal of the evaluation MCU built on the MCU board, and a VSS terminal, when you connect a capacitor, please mount the capacitor to the socket for C terminals (CN3).

- Mounting capacitor ： 2.54 mm Pitch Lead type.

4.10 Reset of this board and evaluation MCU

By pushing a reset switch (SW1), a RSTX signal (L) is outputted and this board and Evaluation MCU are reset.

4.11 POWER LED (LED17)

It is not concerned with AC adapter power supply supply and the terminal for an external power supply input, but the light is switched on when a VCC power supply is supplied.

4.12 Series regulator 5V -> 3.3V (U7)

+3.3 V power supply is generated from +5 V power supply supplied from AC adapter.

- Rating current ：3A (max.)

5. Specification

5.1 General specification

The general specification of this board is shown in Table 5-1.

Table 5-1. General specification

Item	Description
Operating/storage temperature	5°C to 35°C (at operating) , 0°C to 70°C (at storage)
Operating/storage humidity	20 % to 80 % (at operating) , 20 % to 80 % (at storage)
Dimensions	About 100 mm × 150 mm × 20 mm
Weight	This board : about 90 g AC adapter : about 190 g

5.2 Functional block diagram

A functional block diagram is shown in Figure. 5-1.

Figure 5-1. Functional block diagram

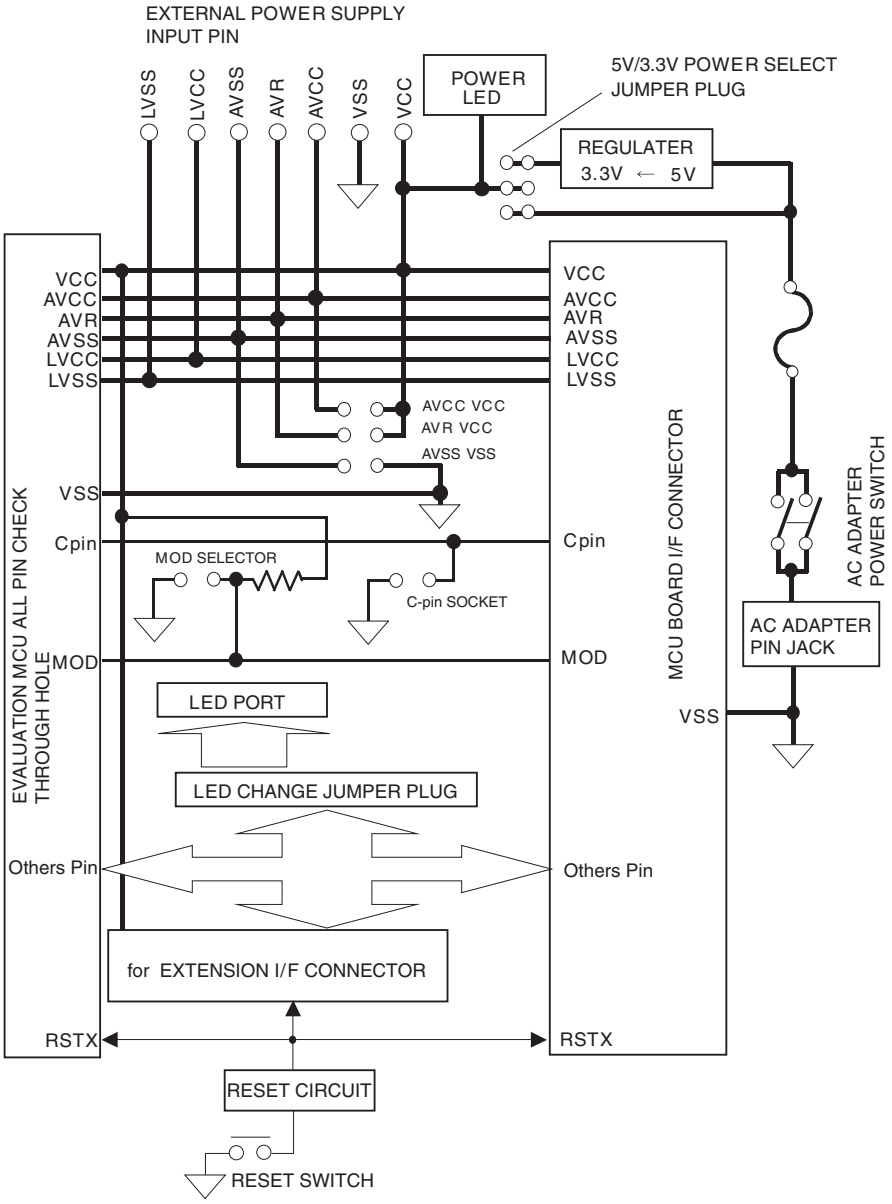

5.3 Main component material

The main component material of this board is shown in Table 5-2.

Table 5-2. Main component material

Item	Part number	Description	Manufacture
AC adapter	3A-211DA-05	Input power supply : AC100 V - 240 V, 50/60 Hz output power supply : DC5 V, 4 A Plug : Outer diameter = ϕ 5.5 mm, Inner diameter = ϕ 2.1 mm, Plug length = 9.5 mm Center plus	Denshi Tsusyo Co.
AC adapter pin jack	HEC0470-01-630	The above-mentioned AC adapter correspondence Rating current 3 A	Hoshiden.co
AC adapter side coil	CDRH125-100NC	10 μH Rating current 4 A	Sumida.co
AC adapter side poly switch	RGE500	Preserve current 5 A/25°C	Raychem
MCU board I/F connector	WR-120SB-VF-1	120pins 0.5 mm pitch 2piece Connector (straight) × 2	JAE
I/F connector for extension	XG4C-4034	40pins 2.54 mm pitch 2piece Connector (light angle)	OMRON
C pin socket	IC26-2010-GS4	2pins 2.54 mm pitch 1piece Socket (straight) It cuts into two pins.	YAMAICHI ELECTORONICS
Incorrect insertion prevention socket	PCW-3-1-1PW	2pins 2.54 mm pitch 1piece Socket (straight)	MAC EIGHT
5V/3.3V power supply selection-jumper plug	XJ8B-0311	3 × 1pin terminal block Rating current 2 A × 2 (total 4 A)	OMRON
AVCC VCC supply jumper plug	XJ8B-0211	2 × 1pin terminal block Rating current 2 A	OMRON
AVR VCC supply jumper plug	XJ8B-0211	2 × 1pin terminal block Rating current 2 A	OMRON
AVSS - VSS supply jumper plug	XJ8B-0211	2 × 1pin terminal block Rating current 2 A	OMRON
LED connection change jumper plug	XJ8C-1611	2 × 8 pin terminal block Rating current 2 A × 2	OMRON
Terminal block jumper plug	XJ8A-0211	2 × 1pin jumper plug Rating current 2 A × 21	OMRON
External power supply input terminal	ST-2-1	Test point terminal × 7 H = 4.5 mm	MAC EIGHT
AC adapter power supply switch	CW-SB21KKGH	Locker switch Rating current 4 A	Nihon Kaiheiki Ind.Co.,LTD
Reset switch	JB-15HFBP2	Tactile switch	Nihon Kaiheiki Ind.Co.,LTD
Series regulator	LT1085CM	5V -> 3.3V, 3 A max.	Linear technology
LED	TLSU1002A	LEDPOWER (led) × 1	TOSHIBA
	TLGU1002A	LED port (green) × 16	TOSHIBA

5.4 MCU board I/F connector (CN1/CN2/CN5)

CN5 is the incorrect insertion prevention socket of a MCU board.

CN1/CN2 are a MCU board I/F connector.The pin assignment of CN1 is shown in Table 5-3, and the pin assignment of CN2 is shown in Table 5-4.

Table 5-3. Pin assignment of MCU board I/F connector CN1

Connector Pin Number	Evaluation MCU Pin No.	Signal name	Connector Pin Number	Evaluation MCU Pin No.	Signal name	Connector Pin Number	Evaluation MCU Pin No.	Signal name
1	A9	PC4	41	E2	LVR3	81	P3	BSOUT
2	B9	PC1	42	E1	LVSS	82	P4	BDBMX
3	C9	PC2	43	F4	LVDREXT	83	R1	P83
4	D9	PC3	44	F3	LVDBGR	84	R2	BRSTX
5	A8	PC0	45	F2	LVDENX	85	R3	X0A
6	B8	PB4	46	F1	P22A	86	R4	RSTX
7	C8	PB5	47	–	GND	87	T1	ROMS1
8	D8	PB6	48	–	GND	88	T2	BSIN
9	A7	PB7	49	G4	P20A	89	T3	Vss
10	B7	PB2	50	G3	NC1	90	T4	X0
11	C7	PB0	51	G2	P21A	91	U1	BEXCK
12	D7	PB1	52	G1	P23A	92	U2	X1
13	A6	PB3	53	H4	P24A	93	U3	MOD
14	B6	PA2	54	H3	P25A	94	U4	PF2
15	C6	P95	55	H2	P26A	95	V1	X1A
16	D6	PA0	56	H1	P27A	96	V2	Vcc53
17	A5	PA3	57	J4	P24B	97	–	GND
18	B5	P94	58	J3	P50	98	–	GND
19	C5	P90	59	J2	P23B	99	V3	PINT0
20	D5	P91	60	J1	P51	100	V4	PSEL_EXT
21	A4	PA1	61	K1	P52	101	R5	PF1
22	A3	P93	62	K2	P55	102	T5	PF0
23	–	GND	63	K3	P54	103	U5	NC2
24	–	GND	64	K4	P53	104	V5	PENABLE
25	A2	CSVENX	65	L1	P70	105	R6	APBENX
26	A1	Vss	66	L2	P74	106	T6	PINT1
27	B4	P92	67	L3	P73	107	U6	PCLK
28	B3	TCLK	68	L4	P72	108	V6	PADDR0
29	B2	LVCC	69	M1	P71	109	R7	PACTIVE
30	B1	LVDIN	70	M2	P76	110	T7	PLOCK
31	C4	Cpin	71	M3	P80	111	U7	PWRITE
32	C3	Vcc51	72	M4	P77	112	V7	PADDR1
33	C2	LVDENX2	73	–	GND	113	R8	PADDR2
34	C1	LVR4	74	–	GND	114	T8	PADDR3
35	D4	TESTO	75	N1	P75	115	U8	PADDR4
36	D3	LVDOUT	76	N2	P82	116	V8	PADDR5
37	D2	LVR2	77	N3	PG0	117	R9	PADDR7
38	D1	BGOENX	78	N4	P84	118	T9	PRDATA0
39	E4	LVR1	79	P1	P81	119	U9	PADDR6
40	E3	LVR0	80	P2	ROMS0	120	V9	PRDATA1

Table 5-4. Pin assignment of MCU board I/F connector CN2

Connector Pin Number	Evaluation MCU Pin No.	Signal name	Connector Pin Number	Evaluation MCU Pin No.	Signal name	Connector Pin Number	Evaluation MCU Pin No.	Signal name
1	A10	PC5	41	E17	NC4	81	P16	P34
2	B10	PD0	42	E18	SEL0	82	P15	P35
3	C10	PC6	43	F15	SEL3	83	R18	P44
4	D10	PC7	44	F16	SEL4	84	R17	P36
5	A11	PD1	45	F17	SEL1	85	R16	P31
6	B11	PD2	46	F18	P04C	86	R15	AVcc3
7	C11	PD3	47	–	GND	87	T18	P40
8	D11	PD4	48	–	GND	88	T17	P32
9	A12	PD5	49	G15	P06C	89	T16	AVss
10	B12	PD7	50	G16	P07C	90	T15	AVR
11	C12	P61	51	G17	P05C	91	U18	P33
12	D12	P60	52	G18	P00C	92	U17	P30
13	A13	PD6	53	H15	P01C	93	U16	AVR3
14	B13	P64	54	H16	P02C	94	U15	P15
15	C13	P66	55	H17	P03C	95	V18	AVcc
16	D13	P65	56	H18	P07A	96	V17	DA0
17	A14	P62	57	J15	P04A	97	–	GND
18	B14	PE0A	58	J16	P05A	98	–	GND
19	C14	PE3A	59	J17	P06A	99	V16	P14
20	D14	PE2A	60	J18	P03A	100	V15	P10
21	A15	P63	61	K18	P02A	101	R14	P16
22	A16	P67	62	K17	P07B	102	T14	DA1
23	–	GND	63	K16	P01A	103	U14	P13
24	–	GND	64	K15	P00A	104	V14	PWDATA7
25	A17	PE4A	65	L18	P06B	105	R13	P11
26	A18	Vcc54	66	L17	P05B	106	T13	P12
27	B15	PE1A	67	L16	P04B	107	U13	NC3
28	B16	PE5A	68	L15	P03B	108	V13	PWDATA3
29	B17	PE7A	69	M18	P02B	109	R12	PWDATA5
30	B18	PE3B	70	M17	P00B	110	T12	PWDATA6
31	C15	PE6A	71	M16	P46	111	U12	PWDATA4
32	C16	Vss	72	M15	P47	112	V12	PRDATA7
33	C17	PE2B	73	–	GND	113	R11	PWDATA0
34	C18	PE7B	74	–	GND	114	T11	PWDATA1
35	D15	PE1B	75	N18	P01B	115	U11	PWDATA2
36	D16	PE0B	76	N17	P43	116	V11	PRDATA6
37	D17	PE6B	77	N16	P41	117	R10	PRDATA3
38	D18	SEL2	78	N15	P42	118	T10	PRDATA4
39	E15	PE5B	79	P18	P45	119	U10	PRDATA5
40	E16	PE4B	80	P17	P37	120	V10	PRDATA2

5.5 The I/F connector for extension (CN4)

The pin assignment of the I/F connector for extension is shown in Table 5-5. Table 5-6 lists recommended connectors.

Table 5-5. I/F connector for extension

Connector Pin Number	Evaluation MCU Pin No.	Signal name	Connector Pin Number	Evaluation MCU Pin No.	Signal name
1	–	VCC	21	T9	PRDATA0
2	–	VCC	22	V9	PRDATA1
3	R4	RSTX	23	V10	PRDATA2
4	V3	PINT0	24	R10	PRDATA3
5	T6	PINT1	25	T10	PRDATA4
6	R6	APBENX	26	U10	PRDATA5
7	U6	PCLK	27	V11	PRDATA6
8	V4	PSEL_EXT	28	V12	PRDATA7
9	V5	PENABLE	29	R11	PWDATA0
10	T7	PLOCK	30	T11	PWDATA1
11	R7	PACTIVE	31	U11	PWDATA2
12	U7	PWRITE	32	V13	PWDATA3
13	V6	PADDR0	33	U12	PWDATA4
14	V7	PADDR1	34	R12	PWDATA5
15	R8	PADDR2	35	T12	PWDATA6
16	T8	PADDR3	36	V14	PWDATA7
17	U8	PADDR4	37	–	VSS
18	V8	PADDR5	38	–	VSS
19	U9	PADDR6	39	–	N.C
20	R9	PADDR7	40	–	N.C

Table 5-6. Recommended connector

Part number	Specifications	Manufacture
XG4M-4030-U	MIL-type strain relief (with lock)	OMRON
XG4M-4030-T	MIL-type strain relief	OMRON
XG5M-4032-N	Discrete-wire IDC connector 2-row socket	OMRON
XG5M-4035-N	Discrete-wire IDC connector 2-row socket	OMRON

5.6 Through evaluation MCU all hole for a terminal check (U1)

The pin assignment of a through evaluation MCU all hole for a terminal check is shown in Table 5-7.

Table 5-7. Pin assignment of through evaluation MCU all hole for terminal check (continued)

Connector Pin Number	Evaluation MCU Pin No.	Signal name	Connector Pin Number	Evaluation MCU Pin No.	Signal name	Connector Pin Number	Evaluation MCU Pin No.	Signal name
1	C3	Vcc51	41	M3	P80	81	U9	PADDR6
2	B2	LVCC	42	P1	P81	82	R9	PADDR7
3	D3	LVDOUT	43	N2	P82	83	T9	PRDATA0
4	C2	LVDENX2	44	R1	P83	84	V9	PRDATA1
5	B1	LVDIN	45	N4	P84	85	V10	PRDATA2
6	E3	LVR0	46	N3	PG0	86	R10	PRDATA3
7	E4	LVR1	47	P2	ROMS0	87	T10	PRDATA4
8	D2	LVR2	48	T1	ROMS1	88	U10	PRDATA5
9	E2	LVR3	49	R2	BRSTX	89	V11	PRDATA6
10	C1	LVR4	50	P4	BDBMX	90	V12	PRDATA7
11	F3	LVDBGR	51	P3	BSOUT	91	R11	PWDATA0
12	F4	LVDREXT	52	U1	BEXCK	92	T11	PWDATA1
13	F2	LVDENX	53	T2	BSIN	93	U11	PWDATA2
14	D1	BGOENX	54	R4	RSTX	94	V13	PWDATA3
15	E1	LVSS	55	R3	X0A	95	U12	PWDATA4
16	G3	NC1	56	V1	X1A	96	R12	PWDATA5
17	G4	P20A	57	A1	Vss_1	97	T12	PWDATA6
18	G2	P21A	58	U2	X1	98	V14	PWDATA7
19	F1	P22A	59	T4	X0	99	U13	NC3
20	G1	P23A	60	U3	MOD	100	V15	P10
21	H4	P24A	61	V2	Vcc53	101	R13	P11
22	H3	P25A	62	T5	PF0	102	T13	P12
23	H2	P26A	63	R5	PF1	103	U14	P13
24	H1	P27A	64	U4	PF2	104	V16	P14
25	J2	P23B	65	U5	NC2	105	U15	P15
26	J4	P24B	66	V3	PINT0	106	R14	P16
27	J3	P50	67	T6	PINT1	107	T14	DA1
28	J1	P51	68	R6	APBENX	108	V17	DA0
29	K1	P52	69	U6	PCLK	109	U16	AVR3
30	K4	P53	70	V4	PSEL_EXT	110	R15	AVcc3
31	K3	P54	71	V5	PENABLE	111	T15	AVR
32	K2	P55	72	T7	PLOCK	112	V18	AVcc
33	L1	P70	73	R7	PACTIVE	113	T16	AVss
34	M1	P71	74	U7	PWRITE	114	U17	P30
35	L4	P72	75	V6	PADDR0	115	R16	P31
36	L3	P73	76	V7	PADDR1	116	T17	P32
37	L2	P74	77	R8	PADDR2	117	U18	P33
38	N1	P75	78	T8	PADDR3	118	P16	P34
39	M2	P76	79	U8	PADDR4	119	P15	P35
40	M4	P77	80	V8	PADDR5	120	R17	P36

Table 5-8. Pin assignment of through evaluation MCU all hole for terminal check(continue)

Connector Pin Number	Evaluation MCU Pin No.	Signal name	Connector Pin Number	Evaluation MCU Pin No.	Signal name	Connector Pin Number	Evaluation MCU Pin No.	Signal name
121	P17	P37	161	D17	PE6B	201	A8	PC0
122	T18	P40	162	E15	PE5B	202	A7	PB7
123	N16	P41	163	E16	PE4B	203	D8	PB6
124	N15	P42	164	B18	PE3B	204	C8	PB5
125	N17	P43	165	C17	PE2B	205	B8	PB4
126	R18	P44	166	D15	PE1B	206	A6	PB3
127	P18	P45	167	D16	PE0B	207	B7	PB2
128	M16	P46	168	A18	Vcc54	208	D7	PB1
129	M15	P47	169	T3	Vss_2	209	C7	PB0
130	M17	P00B	170	B17	PE7A	210	A5	PA3
131	N18	P01B	171	C15	PE6A	211	B6	PA2
132	M18	P02B	172	B16	PE5A	212	A4	PA1
133	L15	P03B	173	A17	PE4A	213	D6	PA0
134	L16	P04B	174	C14	PE3A	214	C6	P95
135	L17	P05B	175	D14	PE2A	215	B5	P94
136	L18	P06B	176	B15	PE1A	216	A3	P93
137	K17	P07B	177	B14	PE0A	217	B4	P92
138	K15	P00A	178	A16	P67	218	D5	P91
139	K16	P01A	179	C13	P66	219	C5	P90
140	K18	P02A	180	D13	P65	220	A2	CSVENX
141	J18	P03A	181	B13	P64	221	B3	TCLK
142	J15	P04A	182	A15	P63	222	D4	TESTO
143	J16	P05A	183	A14	P62	223	C4	Cpin
144	J17	P06A	184	C12	P61	224	C16	Vss
145	H18	P07A	185	D12	P60	225	–	VSS
146	G18	P00C	186	B12	PD7	226	–	VSS
147	H15	P01C	187	A13	PD6	227	–	VCC
148	H16	P02C	188	A12	PD5	228	–	VCC
149	H17	P03C	189	D11	PD4	229	–	N.C
150	F18	P04C	190	C11	PD3	230	–	N.C
151	G17	P05C	191	B11	PD2			
152	G15	P06C	192	A11	PD1			
153	G16	P07C	193	B10	PD0			
154	E18	SEL0	194	D10	PC7			
155	F17	SEL1	195	C10	PC6			
156	D18	SEL2	196	A10	PC5			
157	F15	SEL3	197	A9	PC4			
158	F16	SEL4	198	D9	PC3			
159	E17	NC4	199	C9	PC2			
160	C18	PE7B	200	B9	PC1			

5.7 Product selection correspondence evaluation MCU all the terminal for a terminal check

The terminal position of a through evaluation MCU all hole for a terminal check is shown in Table 5-19 from Table 5-8 for every setup of the product selection switch on a MCU board.

Table 5-9. Correspondence terminal position of through evaluation MCU all hole for terminal check at time of 100-pin-LCD-less selection (U1)

No.	Port	Function	U1 No.	No.	Port	Function	U1 No.	No.	Port	Function	U1 No.
1	Vss	–	–	41	P46	AN14	128	81	PD5	–	188
2	PG0	(Cpin)	46	42	P47	AN15	129	82	PD6	–	187
3	P00	INT00/HC00	146	43	P20	PPG00	17	83	PD7	–	186
4	P01	INT01/HC01	147	44	P21	PPG01	18	84	PE0	INT10	167
5	P02	INT02/HC02	148	45	P22	TO00	19	85	PE1	INT11	166
6	P03	INT03/HC03	149	46	P23	TO01	20	86	PE2	INT12	165
7	P04	INT04/HC04	150	47	P24	EC0	21	87	PE3	INT13	164
8	P05	INT05/HC05	151	48	RSTX	FTEST	54	88	PE4	INT14	163
9	P06	INT06/HC06	152	49	X0A	PG1	55	89	PE5	INT15	162
10	P07	INT07/HC07	153	50	X1A	PG2	56	90	PE6	INT16	161
11	P10	UI0	100	51	Vss	–	–	91	PE7	INT17	160
12	P11	UO0	101	52	X1	–	58	92	P60	PPG10	185
13	P12	UCK0	102	53	X0	–	59	93	P61	PPG11	184
14	P13	TRG0/ADTG	103	54	MOD	–	60	94	P62	TO10	183
15	P14	PPG0	104	55	P25	PPG2	22	95	P63	TO11	182
16	P15	–	105	56	P26	TRG2	23	96	P64	EC1	181
17	P16	–	106	57	P27	–	24	97	P65	SCK	180
18	P50	SCL0	27	58	P70	TO0	33	98	P66	SOT	179
19	P51	SDA0	28	59	P71	TI0	34	99	P67	SIN	178
20	P52	PPG1	29	60	P72	SCL1	35	100	Vcc	–	–
21	P53	TRG1	30	61	P73	SDA1	36				
22	P54	TO1	31	62	P74	–	37				
23	P55	TI1	32	63	P75	UCK1	38				
24	AVR	–	111	64	P76	UO1	39				
25	AVcc	–	112	65	P77	UI1	40				
26	AVss	–	113	66	P80	–	41				
27	P30	AN00	114	67	P81	–	42				
28	P31	AN01	115	68	P82	–	43				
29	P32	AN02	116	69	P83	–	44				
30	P33	AN03	117	70	P84	–	45				
31	P34	AN04	118	71	PA0	–	213				
32	P35	AN05	119	72	PA1	–	212				
33	P36	AN06	120	73	PA2	–	211				
34	P37	AN07	121	74	PA3	–	210				
35	P40	AN08	122	75	PD0	–	193				
36	P41	AN09	123	76	Vcc	–	–				
37	P42	AN10	124	77	PD1	–	192				
38	P43	AN11	125	78	PD2	–	191				
39	P44	AN12	126	79	PD3	–	190				
40	P45	AN13	127	80	PD4	–	189				

Table 5-10. Correspondence terminal position of through evaluation MCU all hole for terminal check at time of selection with 100pin LCD (U1)

No.	Port	Function	U1 No.	No.	Port	Function	U1 No.	No.	Port	Function	U1 No.
1	Vss	-	-	41	P71	TI0	34	81	PC0	S08	201
2	PG0	(Cpin)	46	42	P67	S39/SIN	178	82	PB7	S07	202
3	P00	INT00/HC00	146	43	P66	S38/SOT	179	83	PB6	S06	203
4	P01	INT01/HC01	147	44	P65	S37/SCK	180	84	PB5	S05	204
5	P02	INT02/HC02	148	45	P64	S36/EC1	181	85	PB4	S04	205
6	P03	INT03/HC03	149	46	P63	S35/TO11	182	86	PB3	S03	206
7	P04	INT04/HC04	150	47	P62	S34/TO10	183	87	PB2	S02	207
8	P05	INT05/HC05	151	48	RSTX	FTEST	54	88	PB1	S01	208
9	P06	INT06/HC06	152	49	X0A	-	55	89	PB0	S00	209
10	P07	INT07/HC07	153	50	X1A	-	56	90	PA3	COM3	210
11	P10	UI0	100	51	Vss	-	-	91	PA2	COM2	211
12	P11	UO0	101	52	X1	-	58	92	PA1	COM1	212
13	P12	UCK0	102	53	X0	-	59	93	PA0	COM0	213
14	P13	TRG0/ADTG	103	54	MOD	-	60	94	P95	C1	214
15	P14	PPG0	104	55	P61	S33/PPG11	184	95	P94	C0	215
16	P20	PPG00	17	56	P60	S32/PPG10	185	96	P93	V0	216
17	P21	PPG01	18	57	PE7	S31/INT13	170	97	P92	V1	217
18	P22	TO00	19	58	PE6	S30/INT12	171	98	P91	V2	218
19	P23	TO01	20	59	PE5	S29/INT11	172	99	P90	V3	219
20	P24	EC0	21	60	PE4	S28/INT10	173	100	Vcc	-	-
21	P50	SCL0	27	61	PE3	S27	174				
22	P51	SDA0	28	62	PE2	S26	175				
23	P52	PPG1	29	63	PE1	S25	176				
24	AVR	-	111	64	PE0	S24	177				
25	AVcc	-	112	65	PD7	S23	186				
26	AVss	-	113	66	PD6	S22	187				
27	P30	AN00	114	67	PD5	S21	188				
28	P31	AN01	115	68	PD4	S20	189				
29	P32	AN02	116	69	PD3	S19	190				
30	P33	AN03	117	70	PD2	S18	191				
31	P34	AN04	118	71	PD1	S17	192				
32	P35	AN05	119	72	PD0	S16	193				
33	P36	AN06	120	73	PC7	S15	194				
34	P37	AN07	121	74	PC6	S14	195				
35	P40	AN08	122	75	PC5	S13	196				
36	P41	AN09	123	76	Vcc	-	-				
37	P42	AN10	124	77	PC4	S12	197				
38	P43	AN11	125	78	PC3	S11	198				
39	P53	TRG1	30	79	PC2	S10	199				
40	P70	TO0	33	80	PC1	S09	200				

Table 5-11. Correspondence terminal position of through evaluation MCU all hole for terminal check at time of 80-pin-LCD-less selection (U1)

No.	Port	Function	U1 No.	No.	Port	Function	U1 No.
1	AVcc	-	112	41	P22	TO00	19
2	AVR	-	111	42	P23	TO01	20
3	P74	-	37	43	P24	EC0	21
4	P75	UCK1	38	44	P25	PPG2	22
5	P76	UO1	39	45	P26	TRG2	23
6	P77	UI1	40	46	P50	SCL0	27
7	P81	-	41	47	P51	SDA0	28
8	P80	-	42	48	P52	PPG1	29
9	PE7	INT17	160	49	P53	TRG1	30
10	PE6	INT16	161	50	P54	TO1	31
11	PE5	INT15	162	51	P55	TI1	32
12	PE4	INT14	163	52	P60	PPG10	185
13	PE3	INT13	164	53	P61	PPG11	184
14	PE2	INT12	165	54	P62	TO10	183
15	PE1	INT11	166	55	P63	TO11	182
16	PE0	INT10	167	56	P64	EC1	181
17	MOD	-	60	57	P65	SCK	180
18	X0	-	59	58	P66	SOT	179
19	X1	-	58	59	P67	SIN	178
20	Vss	-	-	60	P70	TO0	33
21	Vcc	-	-	61	P71	TI0	34
22	PG0	(Cpin)	46	62	P72	SCL1	35
23	X1A	PG2	56	63	P73	SDA1	36
24	X0A	PG1	55	64	P47	AN15	129
25	RSTX	FTEST	54	65	P46	AN14	128
26	P00	INT00/HC00	146	66	P45	AN13	127
27	P01	INT01/HC01	147	67	P44	AN12	126
28	P02	INT02/HC02	148	68	P43	AN11	125
29	P03	INT03/HC03	149	69	P42	AN10	124
30	P04	INT04/HC04	150	70	P41	AN09	123
31	P05	INT05/HC05	151	71	P40	AN08	122
32	P06	INT06/HC06	152	72	P37	AN07	121
33	P07	INT07/HC07	153	73	P36	AN06	120
34	P10	UI0	100	74	P35	AN05	119
35	P11	UO0	101	75	P34	AN04	118
36	P12	UCK0	102	76	P33	AN03	117
37	P13	TRG0/ADTG	103	77	P32	AN02	116
38	P14	PPG0	104	78	P31	AN01	115
39	P20	PPG00	17	79	P30	AN00	114
40	P21	PPG01	18	80	AVss	-	113

Table 5-12. Correspondence terminal position of through evaluation MCU all hole for terminal check at time of selection with 80pin LCD (U1)

No.	Port	Function	U1 No.	No.	Port	Function	U1 No.
1	AVcc	-	112	41	PB5	S05	204
2	AVR	-	111	42	PB6	S06	203
3	P14	PPG0	104	43	PB7	S07	202
4	P13	TRG0/ADTG	103	44	PC0	S08	201
5	P12	UCK0	102	45	PC1	S09	200
6	P11	UO0	101	46	PC2	S10	199
7	P10	UI0	100	47	PC3	S11	198
8	P24	EC0	21	48	PC4	S12	197
9	P23	TO01	20	49	PC5	S13	196
10	P22	TO00	19	50	PC6	S14	195
11	P21	PPG01	18	51	PC7	S15	194
12	P20	PPG00	17	52	P60	S16/PPG10	185
13	P53	TRG1	30	53	P61	S17/PPG11	184
14	P52	PPG1	29	54	P62	S18/TO10	183
15	P51	SDA0	28	55	P63	S19/TO11	182
16	P50	SCL0	27	56	P64	S20/EC1	181
17	MOD	-	60	57	P65	S21/SCK	180
18	X0	-	59	58	P66	S22/SOT	179
19	X1	-	58	59	P67	S23/SIN	178
20	Vss	-	-	60	PE0	S24	177
21	Vcc	-	-	61	PE1	S25	176
22	PG0	(Cpin)	46	62	PE2	S26	175
23	X1A	-	56	63	PE3	S27	174
24	X0A	-	55	64	PE4	S28/INT10	173
25	RSTX	FTEST	54	65	PE5	S29/INT11	172
26	P90	V3	219	66	PE6	S30/INT12	171
27	P91	V2	218	67	PE7	S31/INT13	170
28	P92	V1	217	68	P43	AN11	125
29	P93	V0	216	69	P42	AN10	124
30	P94	C0	215	70	P41	AN09	123
31	P95	C1	214	71	P40	AN08	122
32	PA0	COM0	213	72	P07	INT07/AN07	137
33	PA1	COM1	212	73	P06	INT06/AN06	136
34	PA2	COM2	211	74	P05	INT05/AN05	135
35	PA3	COM3	210	75	P04	INT04/AN04	134
36	PB0	S00	209	76	P03	INT03/AN03	133
37	PB1	S01	208	77	P02	INT02/AN02	132
38	PB2	S02	207	78	P01	INT01/AN01	131
39	PB3	S03	206	79	P00	INT00/AN00	130
40	PB4	S04	205	80	AVss	-	113

Table 5-13. Correspondence terminal position of through evaluation MCU all hole for terminal check at time of 64-pin-LCD-less selection (U1)

No.	Port	Function	U1 No.	No.	Port	Function	U1 No.
1	AVcc	-	112	33	P13	TRG0/ADTG	103
2	AVR	-	111	34	P14	PPG0	104
3	PE3	INT13	164	35	P20	PPG00	17
4	PE2	INT12	165	36	P21	PPG01	18
5	PE1	INT11	166	37	P22	TO00	19
6	PE0	INT10	167	38	P23	TO01	20
7	P83	-	44	39	P24	EC0	21
8	P82	-	43	40	P50	SCL0	27
9	P81	-	42	41	P51	SDA0	28
10	P80	-	41	42	P52	PPG1	29
11	P71	TI0	34	43	P53	TRG1	30
12	P70	TO0	33	44	P60	PPG10	185
13	MOD	-	60	45	P61	PPG11	184
14	X0	-	59	46	P62	TO10	183
15	X1	-	58	47	P63	TO11	182
16	Vss	-	-	48	P64	EC1	181
17	Vcc	-	-	49	P65	SCK	180
18	PG0	(Cpin)	46	50	P66	SOT	179
19	X1A	PG2	56	51	P67	SIN	178
20	X0A	PG1	55	52	P43	AN11	125
21	RSTX	FTEST	54	53	P42	AN10	124
22	P00	INT00/HC00	146	54	P41	AN09	123
23	P01	INT01/HC01	147	55	P40	AN08	122
24	P02	INT02/HC02	148	56	P37	AN07	121
25	P03	INT03/HC03	149	57	P36	AN06	120
26	P04	INT04/HC04	150	58	P35	AN05	119
27	P05	INT05/HC05	151	59	P34	AN04	118
28	P06	INT06/HC06	152	60	P33	AN03	117
29	P07	INT07/HC07	153	61	P32	AN02	116
30	P10	UI0	100	62	P31	AN01	115
31	P11	UO0	101	63	P30	AN00	114
32	P12	UCK0	102	64	AVss	-	113

Table 5-14. Correspondence terminal position of through evaluation MCU all hole for terminal check at time of selection with 64pin LCD (U1)

No.	Port	Function	U1 No.	No.	Port	Function	U1 No.
1	AVcc	-	112	33	PB1	S01	208
2	AVR	-	111	34	PB2	S02	207
3	P14	PPG0	104	35	PB3	S03	206
4	P13	TRG0/ADTG	103	36	PB4	S04	205
5	P12	UCK0	102	37	PB5	S05	204
6	P11	UO0	101	38	PB6	S06	203
7	P10	UI0	100	39	PB7	S07	202
8	P24	EC0/SDA0	26	40	PC0	S08	201
9	P23	TO01/SCL0	25	41	PC1	S09	200
10	P22	TO00	19	42	PC2	S10	199
11	P21	PPG01	18	43	PC3	S11	198
12	P20	PPG00	17	44	PC4	S12	197
13	MOD	-	60	45	PC5	S13	196
14	X0	-	59	46	PC6	S14	195
15	X1	-	58	47	PC7	S15	194
16	Vss	-	-	48	P60	S16/PPG10	185
17	Vcc	-	-	49	P61	S17/PPG11	184
18	PG0	(Cpin)	46	50	P62	S18/TO10	183
19	X1A	-	56	51	P63	S19/TO11	182
20	X0A	-	55	52	P64	S20/EC1	181
21	RSTX	FTEST	54	53	P65	S21/SCK	180
22	P90	V3	219	54	P66	S22/SOT	179
23	P91	V2	218	55	P67	S23/SIN	178
24	P92	V1	217	56	P07	INT07/AN07/S24	145
25	P93	V0	216	57	P06	INT06/AN06/S25	144
26	P94	C0	215	58	P05	INT05/AN05/S26	143
27	P95	C1	214	59	P04	INT04/AN04/S27	142
28	PA0	COM0	213	60	P03	INT03/AN03/S28	141
29	PA1	COM1	212	61	P02	INT02/AN02/S29	140
30	PA2	COM2	211	62	P01	INT01/AN01/S30	139
31	PA3	COM3	210	63	P00	INT00/AN00/S31	138
32	PB0	S00	209	64	AVss	-	113

Table 5-15. Correspondence terminal position of through evaluation MCU all hole for terminal check at time of 48-pin-LCD-less selection (U1)

No.	Port	Function	U1 No.	No.	Port	Function	U1 No.
1	P65	SCK	180	25	Vcc	-	-
2	P66	SOT	179	26	PG0	(Cpin)	46
3	P67	SIN	178	27	X1A	PG2	56
4	P37	AN07	121	28	X0A	PG1	55
5	P36	AN06	120	29	RSTX	FTEST	54
6	P35	AN05	119	30	P00	INT00/HC00	146
7	P34	AN04	118	31	P01	INT01/HC01	147
8	P33	AN03	117	32	P02	INT02/HC02	148
9	P32	AN02	116	33	P03	INT03/HC03	149
10	P31	AN01	115	34	P04	INT04/HC04	150
11	P30	AN00	114	35	P05	INT05/HC05	151
12	AVss	-	113	36	P06	INT06/HC06	152
13	AVcc	-	112	37	P07	INT07/HC07	153
14	P24	EC0	21	38	P10	UI0	100
15	P23	TO01	20	39	P11	UO0	101
16	P22	TO00	19	40	P12	UCK0	102
17	P21	PPG01	18	41	P13	TRG0/ADTG	103
18	P20	PPG00	17	42	P14	PPG0	104
19	P51	SDA0	28	43	P15	-	105
20	P50	SCL0	27	44	P60	PPG10	185
21	MOD	-	60	45	P61	PPG11	184
22	X0	-	59	46	P62	TO10	183
23	X1	-	58	47	P63	TO11	182
24	Vss	-	-	48	P64	EC1	181

Table 5-16. Correspondence terminal position of through evaluation MCU all hole for terminal check at time of selection with 48pin LCD (U1)

No.	Port	Function	U1 No.	No.	Port	Function	U1 No.
1	P61	S09/PPG11	184	25	Vcc	-	-
2	P62	S10/TO10	183	26	PG0	(Cpin)	46
3	P63	S11/TO11	182	27	X1A	-	56
4	P64	S12/EC1	181	28	X0A	-	55
5	P65	S13/SCK	180	29	RSTX	FTEST	54
6	P66	S14/SOT	179	30	P90	V3	219
7	P67	S15/SIN	178	31	P91	V2	218
8	P14	PPG0	104	32	P92	V1	217
9	P13	TRG0/ADTG	103	33	P93	V0	216
10	P12	UCK0	102	34	P94	C0	215
11	P11	UO0	101	35	P95	C1	214
12	P10	UI0	100	36	PA0	COM0	213
13	P07	INT07/AN07	137	37	PA1	COM1	212
14	P06	INT06/AN06	136	38	PA2	COM2	211
15	P05	INT05/AN05	135	39	PA3	COM3	210
16	P04	INT04/AN04	134	40	PB0	S00	209
17	P03	INT03/AN03	133	41	PB1	S01	208
18	P02	INT02/AN02	132	42	PB2	S02	207
19	P01	INT01/AN01	131	43	PB3	S03/PPG00	206
20	P00	INT00/AN00	130	44	PB4	S04/PPG01	205
21	MOD	-	60	45	PB5	S05/TO00	204
22	X0	-	59	46	PB6	S06/TO01	203
23	X1	-	58	47	PB7	S07/EC0	202
24	Vss	-	-	48	P60	S08/PPG10	185

Table 5-17. Correspondence terminal position of through evaluation MCU all hole for terminal check at time of 32pin selection (U1)

No.	Port	Function	U1 No.	No.	Port	Function	U1 No.
1	P64	EC1	181	17	PF2	HC12	64
2	P63	TO11	182	18	AVcc	-	112
3	P62	TO10	183	19	AVss	-	113
4	P61	PPG11	184	20	P00	INT00/AN00/PPG00	130
5	MOD	-	60	21	P01	INT01/AN01/PPG01	131
6	X0	-	59	22	P02	INT02/AN02/SCK	132
7	X1	-	58	23	P03	INT03/AN03/SOT	133
8	Vss	-	-	24	P04	INT04/AN04/SIN	134
9	Vcc	-	-	25	P05	INT05/AN05/TO00	135
10	PG0	(Cpin)	46	26	P06	INT06/AN06/TO01	136
11	X1A	PG2	56	27	P07	INT07/AN07	137
12	X0A	PG1	55	28	P10	UI0	100
13	RSTX	FTEST	54	29	P11	UO0	101
14	P60	PPG10	185	30	P12	UCK0/EC0	102
15	PF0	HC10	62	31	P13	TRG0/ADTG	103
16	PF1	HC11	63	32	P14	PPG0	104

Table 5-18. Correspondence terminal position of through evaluation MCU all hole for terminal check at time of 28pin selection (U1)

No.	Port	Function	U1 No.	No.	Port	Function	U1 No.
1	P16	-	106	15	P00	INT00/AN00/PPG00	130
2	PF0	HC10	62	16	P01	INT01/AN01/PPG01	131
3	PF1	HC11	63	17	P02	INT02/AN02/SCK	132
4	MOD	-	60	18	P03	INT03/AN03/SOT	133
5	X0	-	59	19	P04	INT04/AN04/SIN	134
6	X1	-	58	20	P05	INT05/AN05/TO00	135
7	Vss	-	-	21	P06	INT06/AN06/TO01	136
8	Vcc	-	-	22	P07	INT07/AN07	137
9	PG0	(Cpin)	46	23	P10	UI0	100
10	X1A	PG2	56	24	P11	UO0	101
11	X0A	PG1	55	25	P12	UCK0/EC0	102
12	RSTX	FTEST	54	26	P13	TRG0/ADTG	103
13	AVcc	-	112	27	P14	PPG0	104
14	AVss	-	113	28	P15	-	105

Table 5-19. Correspondence terminal position of through evaluation MCU all hole for terminal check at time of 20pin selection (U1)

No.	Port	Function	U1 No.	No.	Port	Function	U1 No.
1	RSTX	FTEST	54	11	P11	UO0	101
2	MOD	-	60	12	P10	UI0	100
3	X0	-	59	13	P07	INT07/AN07	137
4	X1	-	58	14	P06	INT06/AN06/TO01	136
5	Vss	-	-	15	P05	INT05/AN05/TO00	135
6	Vcc	-	-	16	P04	INT04/AN04/SIN	134
7	PG0	(Cpin)	46	17	P03	INT03/AN03/SOT	133
8	P14	PPG0	104	18	P02	INT02/AN02/SCK	132
9	P13	TRG0/ADTG	103	19	P01	INT01/AN01/PPG01	131
10	P12	UCK0/EC0	102	20	P00	INT00/AN00/PPG00	130

5.8 Circuit diagram

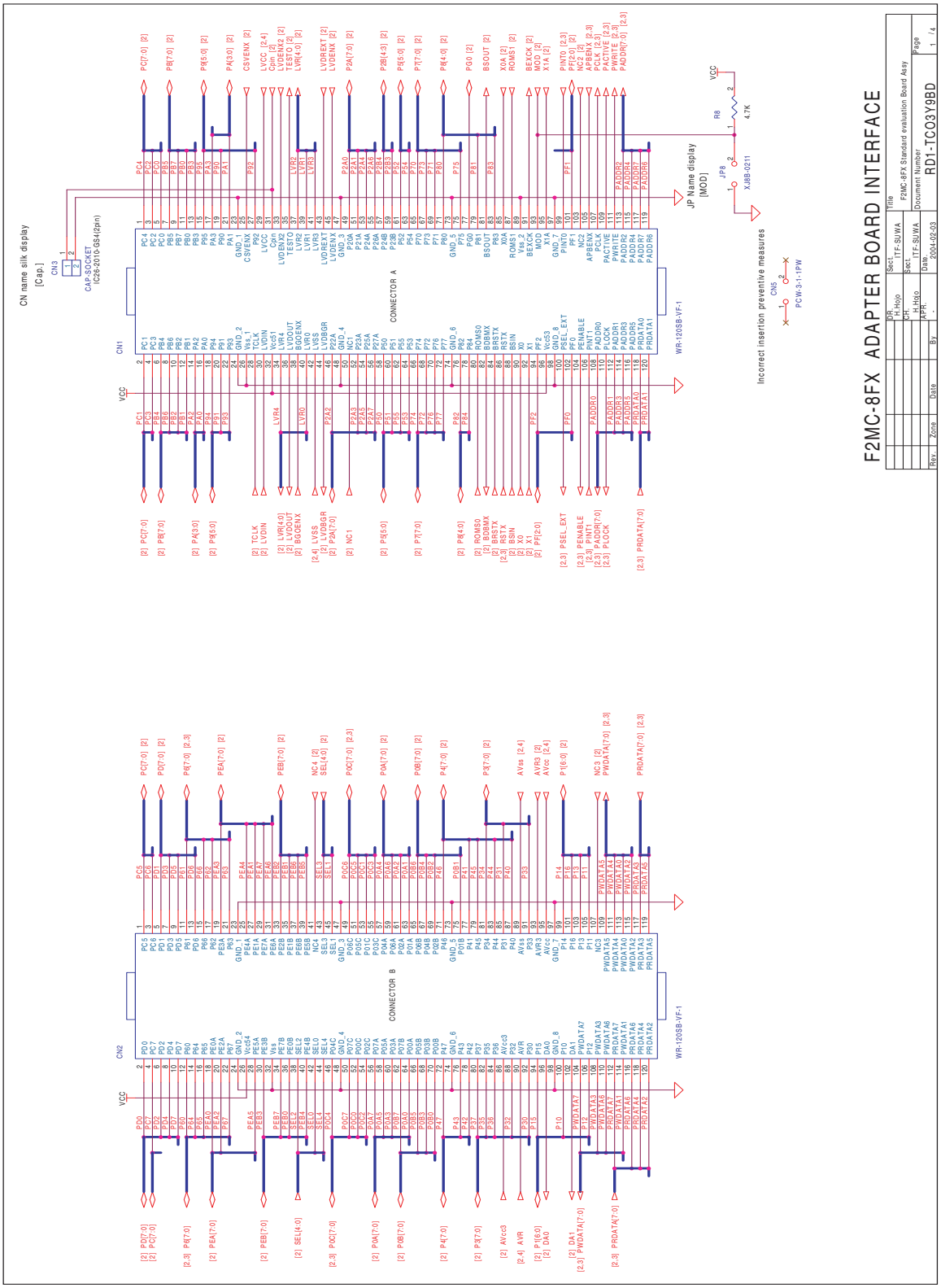

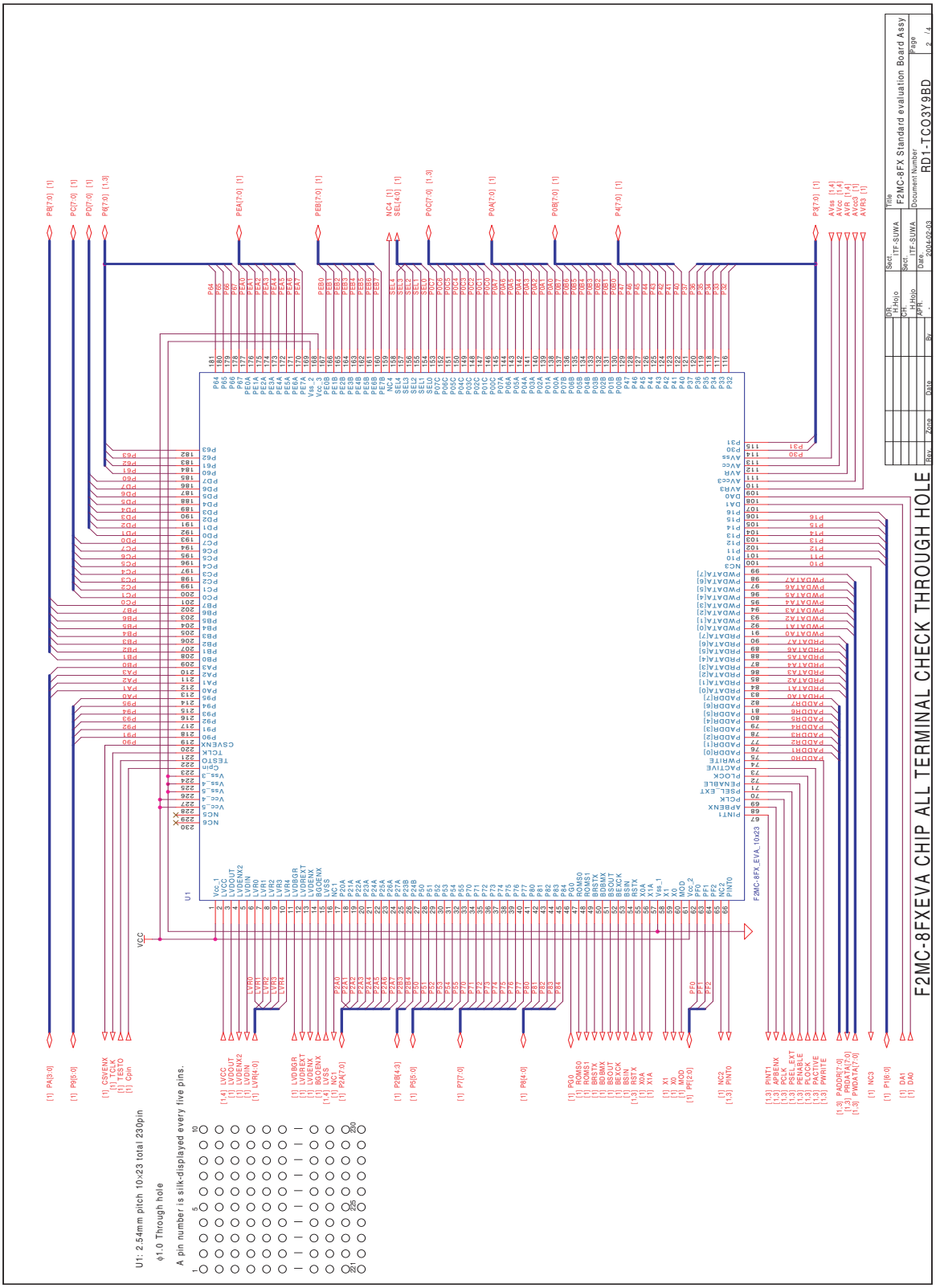
F2MC-8FXEVA CHIP ALL TERMINAL CHECK THROUGH HOLE
F2MC-8FX Standard evaluation Board Assy
RD1-TC03Y9BD
U1: 2.54mm pitch 10x23 total 230pin
ø1.0 Through hole
A pin number is silk-displayed every five pins.

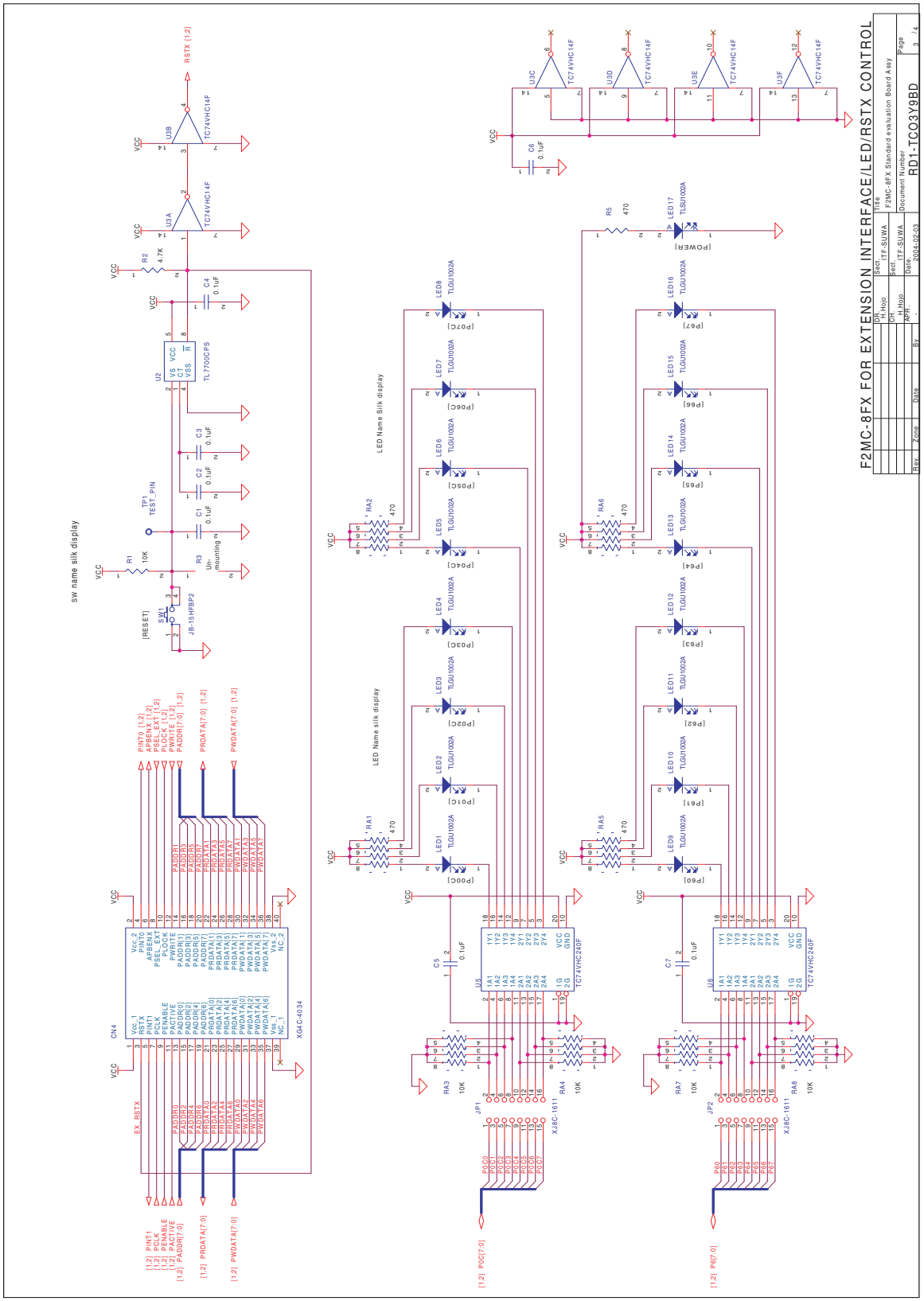
F2MC-8FX FOR EXTENSION INTERFACE/LED/RSTX CONTROL
F2MC-8FX Standard evaluation Board Assy
RD1-TCO3Y9BD
sw name silk display
LED Name Silk display
LED Name silk display
TC74VHC14F
TL7700CPS
TC74VHC240F
XG4C-4034
XJ8C-1611
JB-15HFBP2
TLGU1002A
TEST_PIN
(RESET)
(POWER)
(1.2) PINT1
(1.2) PCLK
(1.2) PENABLE
(1.2) PACTIVE
(1.2) PADDR[7:0]
(1.2) PRDATA[7:0]
(1.2) PWDATA[7:0]
(1.2) P0C[7:0]
(1.2) P6[7:0]

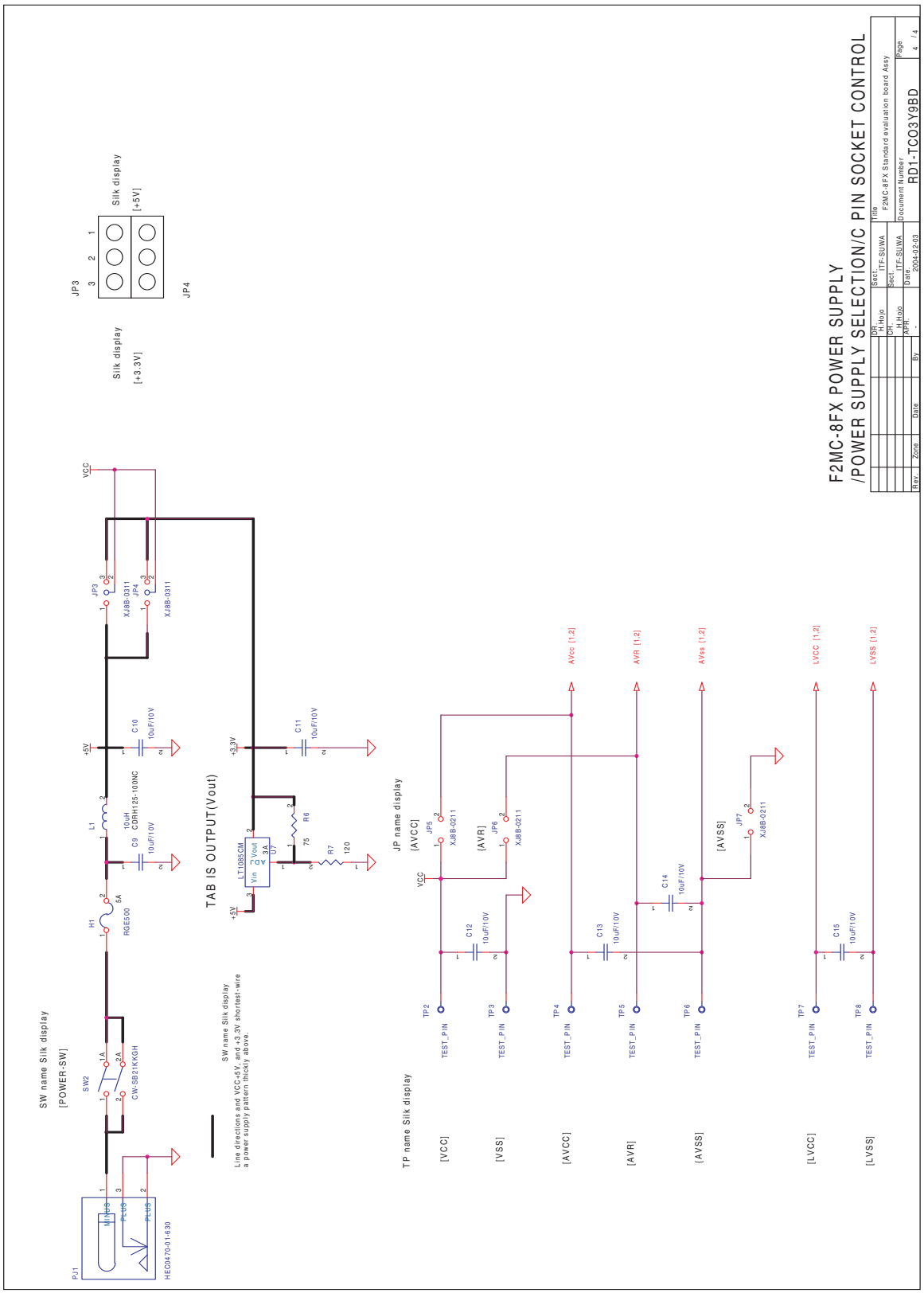
F2MC-8FX POWER SUPPLY
/POWER SUPPLY SELECTION/C PIN SOCKET CONTROL
F2MC-8FX Standard evaluation board Assy
RD1-TCO3Y9BD
SW name Silk display
[POWER-SW]
SW2
CW-SB21KKGH
H1
RGE500
5A
L1
10uH
CDRH125-100NC
C9
10uF/10V
C10
10uF/10V
JP3
JP4
XJ8B-0311
Silk display
[+5V]
Silk display
[+3.3V]
PJ1
HEG0470-01-630
TAB IS OUTPUT(Vout)
LT1085CM
C11
10uF/10V
R6
75
R7
120
SW name Silk display
Line directions and VCC=5V, and +3.3V shortest-wire
a power supply pattern thickly above.
JP name display
[AVCC]
[AVR]
[AVss]
JP5
JP6
JP7
XJ8B-0211
C12
C13
C14
C15
TP name Silk display
[VCC]
[VSS]
[AVCC]
[AVR]
[AVSS]
[LVCC]
[LVSS]
TP2
TP3
TP4
TP5
TP6
TP7
TP8
TEST_PIN
AVcc [1.2]
AVR [1.2]
AVss [1.2]
LVCC [1.2]
LVSS [1.2]

Revision History

Document Revision

Document Title: MB2146-401 F^{2}MC-8FX Family Evaluation Board Operation Guide Document Number: 002-07324				
Revision	**ECN#**	**Issue Date**	**Origin of Change**	**Description of Change**
**	–	12/07/2004	HUAL	Initial release
*A	5274191	05/26/2016	HUAL	Migrated Spansion Guide from SS01-26001-1E to Cypress format