MB2146-271

F²MC-8FX Family SSOP-30P (0.65mm pitch) Header Board Operation Guide

Doc. # 002-07494 Rev. *A

Cypress Semiconductor
198 Champion Court
San Jose, CA 95134-1709
Phone (USA): 800.858.1810
Phone (Intnl): +1.408.943.2600
www.cypress.com

Copyrights

© Cypress Semiconductor Corporation, 2007-2016. This document is the property of Cypress Semiconductor Corporation and its subsidiaries, including Spansion LLC (“Cypress”). This document, including any software or firmware included or referenced in this document (“Software”), is owned by Cypress under the intellectual property laws and treaties of the United States and other countries worldwide. Cypress reserves all rights under such laws and treaties and does not, except as specifically stated in this paragraph, grant any license under its patents, copyrights, trademarks, or other intellectual property rights. If the Software is not accompanied by a license agreement and you do not otherwise have a written agreement with Cypress governing the use of the Software, then Cypress hereby grants you a personal, non-exclusive, nontransferable license (without the right to sublicense) (1) under its copyright rights in the Software (a) for Software provided in source code form, to modify and reproduce the Software solely for use with Cypress hardware products, only internally within your organization, and (b) to distribute the Software in binary code form externally to end users (either directly or indirectly through resellers and distributors), solely for use on Cypress hardware product units, and (2) under those claims of Cypress's patents that are infringed by the Software (as provided by Cypress, unmodified) to make, use, distribute, and import the Software solely for use with Cypress hardware products. Any other use, reproduction, modification, translation, or compilation of the Software is prohibited.

TO THE EXTENT PERMITTED BY APPLICABLE LAW, CYPRESS MAKES NO WARRANTY OF ANY KIND, EXPRESS OR IMPLIED, WITH REGARD TO THIS DOCUMENT OR ANY SOFTWARE OR ACCOMPANYING HARDWARE, INCLUDING, BUT NOT LIMITED TO, THE IMPLIED WARRANTIES OF MERCHANTABILITY AND FITNESS FOR A PARTICULAR PURPOSE. To the extent permitted by applicable law, Cypress reserves the right to make changes to this document without further notice. Cypress does not assume any liability arising out of the application or use of any product or circuit described in this document. Any information provided in this document, including any sample design information or programming code, is provided only for reference purposes. It is the responsibility of the user of this document to properly design, program, and test the functionality and safety of any application made of this information and any resulting product. Cypress products are not designed, intended, or authorized for use as critical components in systems designed or intended for the operation of weapons, weapons systems, nuclear installations, life-support devices or systems, other medical devices or systems (including resuscitation equipment and surgical implants), pollution control or hazardous substances management, or other uses where the failure of the device or system could cause personal injury, death, or property damage (“Unintended Uses”). A critical component is any component of a device or system whose failure to perform can be reasonably expected to cause the failure of the device or system, or to affect its safety or effectiveness. Cypress is not liable, in whole or in part, and you shall and hereby do release Cypress from any claim, damage, or other liability arising from or related to all Unintended Uses of Cypress products. You shall indemnify and hold Cypress harmless from and against all claims, costs, damages, and other liabilities, including claims for personal injury or death, arising from or related to any Unintended Uses of Cypress products.

Cypress, the Cypress logo, Spansion, the Spansion logo, and combinations thereof, PSoC, CapSense, EZ-USB, F-RAM, and Traveo are trademarks or registered trademarks of Cypress in the United States and other countries. For a more complete list of Cypress trademarks, visit cypress.com. Other names and brands may be claimed as property of their respective owners.

Preface

Thank you for purchasing the SSOP-30P (0.65mm pitch)*1 header board (model number: MB2146-271) for the F^{2}MC-8FX family.

The MB2146-271 is a header board that is used to connect an MCU board (model number: MB2146-301A/303A) that is fitted with a F^{2}MC-8FX family evaluation MCU to a user system.

This manual explains how to handle the MB2146-271 header board. Read this manual thoroughly before using the MB2146-271 header board.

Consult the Sales representatives or the Support representatives of Cypress for details on the mass-produced MCUs and evaluation MCUs that are supported by this product.

*1: The lead pitch of the package (FPT-30P-M02) is 0.65mm and the body size is 5.6mm × 9.7mm.

■ Caution of the products described in this document

The following precautions apply to the product described in this manual.

CAUTION	The wrong use of a device will give an injury and may cause malfunction on customers system.

Cuts	This product has parts with sharp points that are exposed. Take care when handling the product as there is a risk of injury if the exposed sharp edges are touched.
Damage	When connect the header board to the user system, correctly position the index mark (▲) on the conversion board mounted on the user system with the 1 pin direction (1) on the header board, otherwise the MCU board and user system might be damaged.
Damage	When mounting a mass production MCU, correctly position pin 1, otherwise the mass production MCU and user system might be damaged.

Contents

1. Product Outline **5**

1.1 Product Outline 5
1.2 Product Configuration 6

2. Checking the Delivered Product **7**

3. Procedure for Connecting to a User System **8**

3.1 Connecting....8
3.2 Disconnection 8

4. Notes **9**

4.1 Handling precautions 9
4.2 Notes on designing 10
4.2.1 Notes on designing the printed circuit board for the user system 10
4.2.2 MCU Footprint Design Precautions 11
4.2.3 Notes on Mounting Mass-produced MCUs 11

5. Specifications **12**

5.1 General Specifications....12
5.2 Main Parts....12
5.3 Function Block Diagram....13
5.4 MCU Board I/F Connectors (CN1/CN2/CN3) 14
5.5 Pin Assignments for I/F between Header Board and Conversion Board (Connection Table) 16

Revision History **17**

1. Product Outline

1.1 Product Outline

This product consists of a header board (referred to as the “header board”) that is used to connect an MCU board (model number: MB2146-301A/303A) that has an evaluation MCU of Cypress 8-bit microcontrollers F^{2}MC-8FX family mounted on it to a user system, and a package product signal line conversion board (referred to as the “conversion board”) for connecting to a target board. An F^{2}MC-8FX evaluation environment can be constructed by combining four products shown in Figure 1-1: the header board, conversion board, MCU board, and BGM adapter (model number: MB2146-09).

For more information please visit our following websites:

www.cypress.com/documentation/development-kitsboards/mb2146-271

www.cypress.com/documentation/development-kitsboards/mb2146-09a-e

www.cypress.com/documentation/development-kitsboards/mb2146-301a-e

www.cypress.com/documentation/development-kitsboards/mb2146-303a-e

Figure 1-1. System configuration

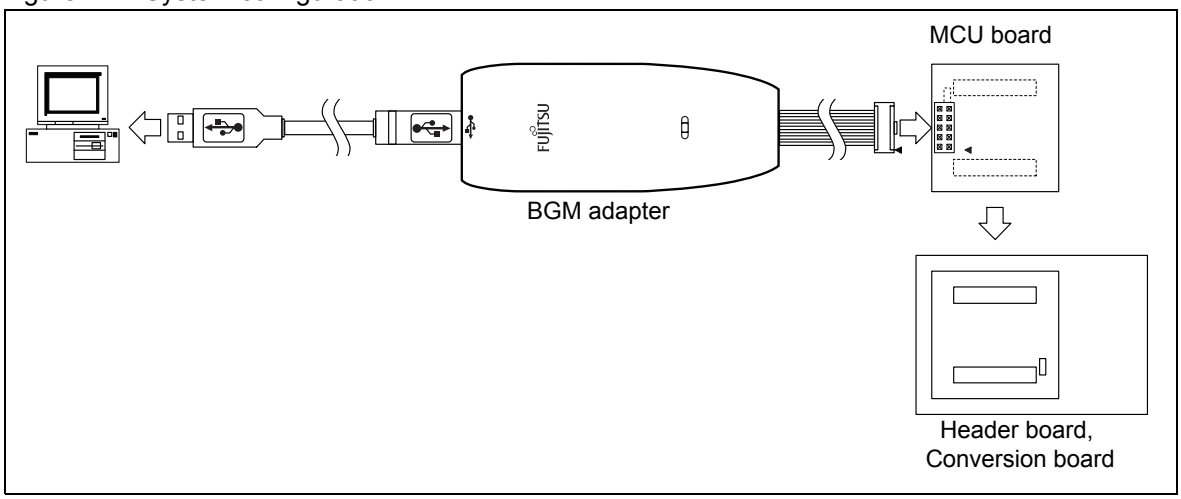

1.2 Product Configuration

Table 1-1 lists the product configuration of the header board, and Table 1-2 lists the optional parts.

Table 1-1. Product configuration

Name	Description	Remarks
Header board for the SSOP-30P (0.65mm pitch) package	A board that converts the signal lines of a package product from an MCU board	
Conversion board for the SSOP-30P (0.65mm pitch) package	A package signal line conversion connector for mounting on the user system	Capable of purchasing as option individually Model number: SSA-30BK1-M02(from Tokyo Eletech Corporation.)

Table 1-2. Optional parts

Name	Description	Remarks
BGM adapter (Model number: MB2146-09)	ICE unit for F^2MC-8FX	
MCU board (Model number: MB2146-301A/303A)	Built-in MB95FV100D-101/103	Built-in F^2MC-8FX evaluation MCU*

* : Several types of evaluation MCUs are available depending on the application and the power supply voltage. Purchase the one that satisfies the service conditions.

2. Checking the Delivered Product

Before using the MB2146-271, confirm that the following components are included in the box:

- SSOP-30P (0.65mm pitch) header board*1 : 1
- Signal line conversion board for SSOP-30P (0.65mm pitch)*2 : 1
- Operation manual (English version, this manual) : 1
- Operation manual (Japanese version) : 1

*1: Referred to as the “header board”.
*2: Referred to as the “conversion board”. The footprint of a mass-produced MCU is prepared on a user's target board, and it mounts there directly.

3. Procedure for Connecting to a User System

3.1 Connecting

1. Mount the conversion board on the user system.
   The location of pin 1 of the device is indicated by the cut-away corner of the conversion board.
2. Connect the header board to the user system on which the conversion board is mounted (The connector shape prevents incorrect connections) (See Figure 3-1).

Figure 3-1. Connection position (Top view)

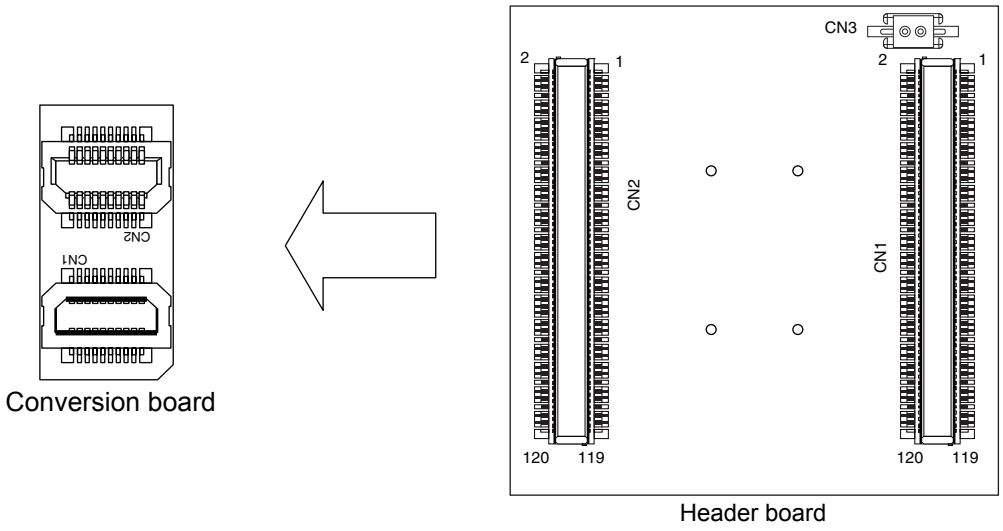

3.2 Disconnection

When removing the conversion board from the header board, do not apply excessive force to avoid stripping the conversion board from the target board.

4. Notes

4.1 Handling precautions

Please take note of the following points to ensure that the header board and conversion board are always used correctly in a suitable environment.

- Do not apply excessive force to the conversion board mounted on the user system when the header board and conversion board are connected.
- Take care not to apply excessive force to the conversion board mounted on the user system when connecting or disconnecting the header board and conversion board.

4.2 Notes on designing

4.2.1 Notes on designing the printed circuit board for the user system

When the header board is connected to the user system, parts mounted around the conversion board on the user system may come into contact with the header board if the heights of the parts are too large. To prevent this, design the printed circuit board for the user system such that the components do not exceed the height shown in Figure 4-1. Figure 4-1 shows the dimensions of the header board and conversion board.

Figure 4-1. Header board and conversion board dimensions

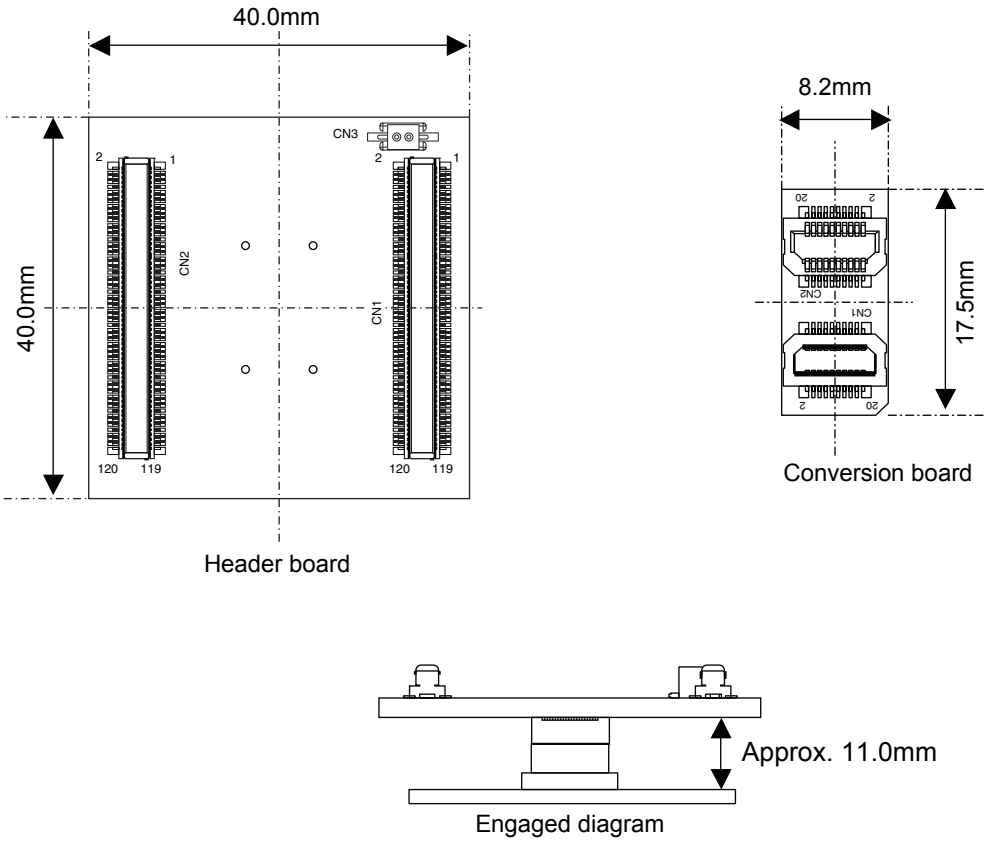

CN3 : Incorrect insertion prevention socket

CN1/CN2 : MCU board I/F connector

4.2.2 MCU Footprint Design Precautions

Figure 4-2 shows the recommended footprint dimensions for the conversion board mounted on the printed circuit board of the user system. Take the footprint in Figure 4-2 into consideration as well as the footprint of the mass-produced MCU when designing the printed circuit board for the user system.

Figure 4-2. Recommended footprint dimensions for mounting conversion board

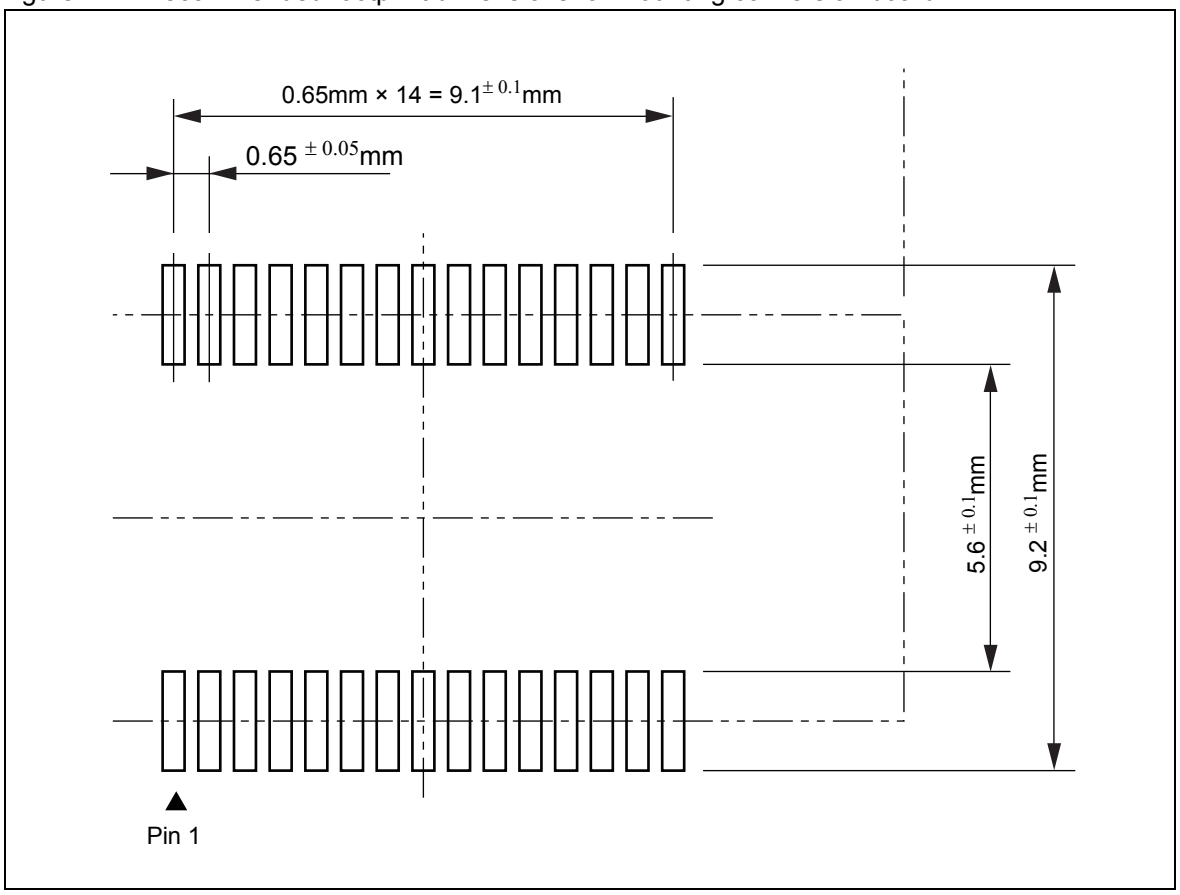

4.2.3 Notes on Mounting Mass-produced MCUs

Unlike previous header boards, this product does not use the YQPACK manufactured by Tokyo Eletech Corporation.

As a result, you cannot perform evaluation by mounting a mass-produced MCU on the conversion board.

5. Specifications

5.1 General Specifications

Table 5-1 lists the general specifications of the header board.

Table 5-1. General specifications

Item		Description	Remarks
Operating temperature and storage temperature		Operation: +10°C to +35°C Storage: -10°C to +50°C	
Operating humidity and storage humidity		Operation: 35% to 85% Storage: 35% to 85%	No condensation
External dimensions	Header board	Approximately: 40.0mm × 40.0mm × 8.0mm (The height includes the connector)	
	Conversion board	Approximately: 17.5mm × 8.2mm × 8.0mm (The height includes the connector)	

5.2 Main Parts

Table 5-2 lists the main parts of the header board and conversion connector.

Table 5-2. Main parts

Part	Description
MCU board I/F connector (Header board side)	120 pins, 0.5mm pitch, 2-piece connector (Straight) × 2 Model number: WR-120SB-VF-N1 (from Japan Aviation Electronics Industry, Ltd.)
Incorrect insertion prevention socket (Header board side)	2 pins, 2.54mm pitch, 1-piece socket (Straight) Model number: PCW-3-1-1PW (from Mac Eight Co. Ltd.)
I/F connector between header board and conversion board (Header board side, conversion board side)	Socket 20 pins, 0.5mm pitch × 1 each Model number: AXK5S20535 (from Matsushita Electric Works Ltd.)
I/F connector between header board and conversion board (Header board side, conversion board side)	Socket 20 pins, 0.5mm pitch × 1 each Model number: AXK5S20330 (from Matsushita Electric Works Ltd.)

5.3 Function Block Diagram

The header board connects to the mass-produced MCU's pin signals via the MCU board I/F connector and the conversion board connected to the target board. The header board does not contain any ICs or other internal components. Figure 5-1 shows the block diagram.

Figure 5-1. Function Block Diagram

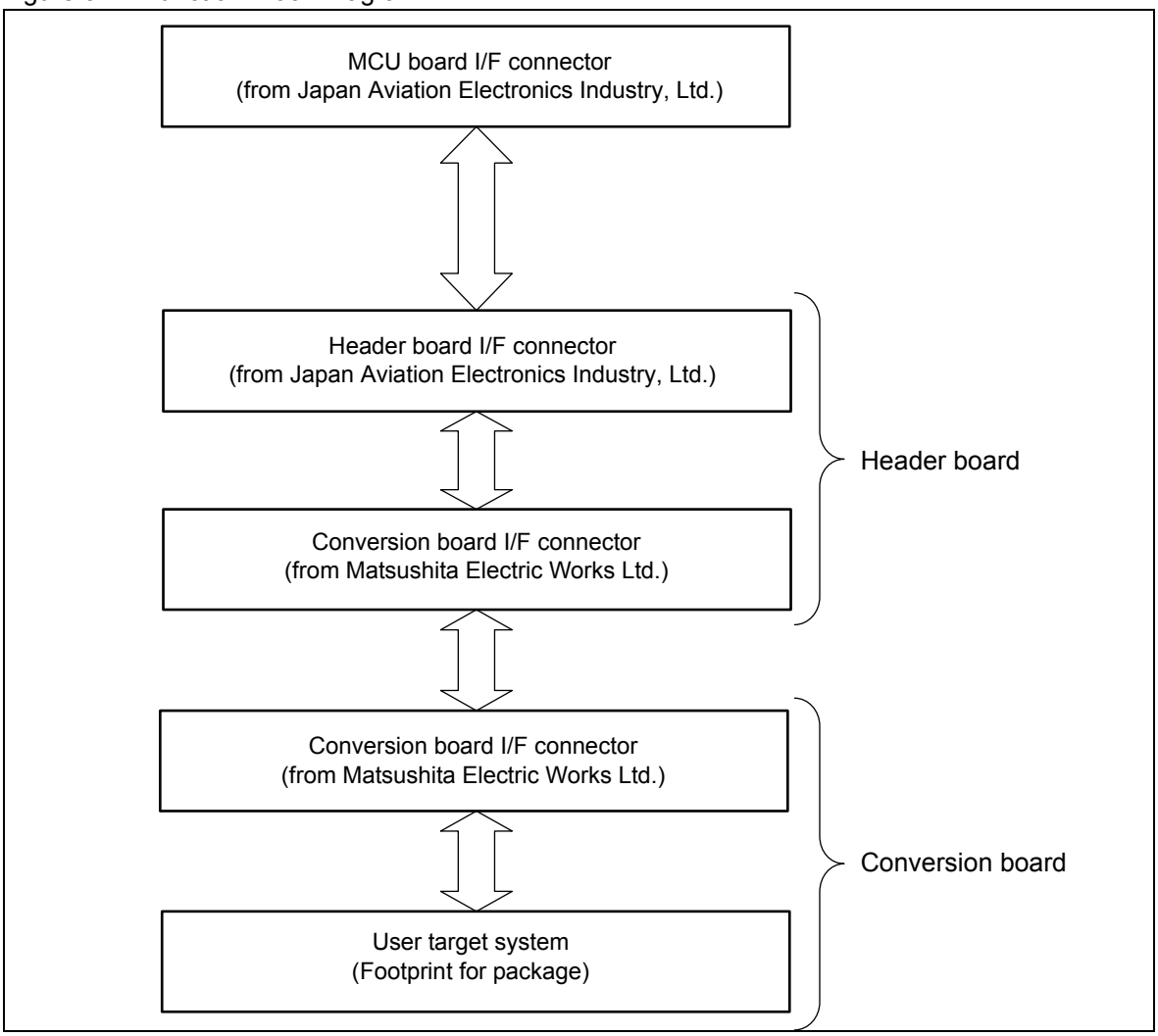

5.4 MCU Board I/F Connectors (CN1/CN2/CN3)

CN1 and CN2 are MCU board I/F connectors. CN3 is the incorrect insertion prevention socket of the MCU board. The pin assignment of the MCU board I/F connector CN1 is shown in Table 5-3, and the pin assignment of the MCU board I/F connector CN2 is shown in Table 5-4.

Table 5-3. Pin assignment of the MCU board I/F connector CN1

Connector pin number	Evaluation MCU pin number	Signal name	Connector pin number	Evaluation MCU pin number	Signal name	Connector pin number	Evaluation MCU pin number	Signal name
1	A9	PC4	41	E2	LVR3	81	P3	BSOUT
2	B9	PC1	42	E1	LVSS	82	P4	BDBMX
3	C9	PC2	43	F4	LVDREXT	83	R1	P83
4	D9	PC3	44	F3	LVDBGR	84	R2	BRSTX
5	A8	PC0	45	F2	LVDENX	85	R3	X0A
6	B8	PB4	46	F1	P22A	86	R4	RSTX
7	C8	PB5	47	(	GND	87	T1	ROMS1
8	D8	PB6	48	(	GND	88	T2	BSIN
9	A7	PB7	49	G4	P20A	89	T3	Vss
10	B7	PB2	50	G3	NC1	90	T4	X0
11	C7	PB0	51	G2	P21A	91	U1	BEXCK
12	D7	PB1	52	G1	P23A	92	U2	X1
13	A6	PB3	53	H4	P24A	93	U3	MOD
14	B6	PA2	54	H3	P25A	94	U4	PF2
15	C6	P95	55	H2	P26A	95	V1	X1A
16	D6	PA0	56	H1	P27A	96	V2	Vcc53
17	A5	PA3	57	J4	P24B	97	(	GND
18	B5	P94	58	J3	P50	98	(	GND
19	C5	P90	59	J2	P23B	99	V3	PINT0
20	D5	P91	60	J1	P51	100	V4	PSEL_EXT
21	A4	PA1	61	K1	P52	101	R5	PF1
22	A3	P93	62	K2	P55	102	T5	PF0
23	(	GND	63	K3	P54	103	U5	NC2
24	(	GND	64	K4	P53	104	V5	PENABLE
25	A2	CSVENX	65	L1	P70	105	R6	APBENX
26	A1	Vss	66	L2	P74	106	T6	PINT1
27	B4	P92	67	L3	P73	107	U6	PCLK
28	B3	TCLK	68	L4	P72	108	V6	PADDR0
29	B2	LVCC	69	M1	P71	109	R7	PACTIVE
30	B1	LVDIN	70	M2	P76	110	T7	PLOCK
31	C4	Cpin	71	M3	P80	111	U7	PWRITE
32	C3	Vcc51	72	M4	P77	112	V7	PADDR1
33	C2	LVDENX2	73	(	GND	113	R8	PADDR2
34	C1	LVR4	74	(	GND	114	T8	PADDR3
35	D4	TESTO	75	N1	P75	115	U8	PADDR4
36	D3	LVDOUT	76	N2	P82	116	V8	PADDR5
37	D2	LVR2	77	N3	PG0	117	R9	PADDR7
38	D1	BGOENX	78	N4	P84	118	T9	PRDATA0
39	E4	LVR1	79	P1	P81	119	U9	PADDR6
40	E3	LVR0	80	P2	ROMS0	120	V9	PRDATA1

Table 5-4. Pin assignment of the MCU board I/F connector CN2

Connector pin number	Evaluation MCU pin number	Signal name	Connector pin number	Evaluation MCU pin number	Signal name	Connector pin number	Evaluation MCU pin number	Signal name
1	A10	PC5	41	E17	NC4	81	P16	P34
2	B10	PD0	42	E18	SEL0	82	P15	P35
3	C10	PC6	43	F15	SEL3	83	R18	P44
4	D10	PC7	44	F16	SEL4	84	R17	P36
5	A11	PD1	45	F17	SEL1	85	R16	P31
6	B11	PD2	46	F18	P04C	86	R15	AVcc3
7	C11	PD3	47	(	GND	87	T18	P40
8	D11	PD4	48	(	GND	88	T17	P32
9	A12	PD5	49	G15	P06C	89	T16	AVss
10	B12	PD7	50	G16	P07C	90	T15	AVR
11	C12	P61	51	G17	P05C	91	U18	P33
12	D12	P60	52	G18	P00C	92	U17	P30
13	A13	PD6	53	H15	P01C	93	U16	AVR3
14	B13	P64	54	H16	P02C	94	U15	P15
15	C13	P66	55	H17	P03C	95	V18	AVcc
16	D13	P65	56	H18	P07A	96	V17	DA0
17	A14	P62	57	J15	P04A	97	(	GND
18	B14	PE0A	58	J16	P05A	98	(	GND
19	C14	PE3A	59	J17	P06A	99	V16	P14
20	D14	PE2A	60	J18	P03A	100	V15	P10
21	A15	P63	61	K18	P02A	101	R14	P16
22	A16	P67	62	K17	P07B	102	T14	DA1
23	(	GND	63	K16	P01A	103	U14	P13
24	(	GND	64	K15	P00A	104	V14	PWDATA7
25	A17	PE4A	65	L18	P06B	105	R13	P11
26	A18	Vcc54	66	L17	P05B	106	T13	P12
27	B15	PE1A	67	L16	P04B	107	U13	NC3
28	B16	PE5A	68	L15	P03B	108	V13	PWDATA3
29	B17	PE7A	69	M18	P02B	109	R12	PWDATA5
30	B18	PE3B	70	M17	P00B	110	T12	PWDATA6
31	C15	PE6A	71	M16	P46	111	U12	PWDATA4
32	C16	Vss	72	M15	P47	112	V12	PRDATA7
33	C17	PE2B	73	(	GND	113	R11	PWDATA0
34	C18	PE7B	74	(	GND	114	T11	PWDATA1
35	D15	PE1B	75	N18	P01B	115	U11	PWDATA2
36	D16	PE0B	76	N17	P43	116	V11	PRDATA6
37	D17	PE6B	77	N16	P41	117	R10	PRDATA3
38	D18	SEL2	78	N15	P42	118	T10	PRDATA4
39	E15	PE5B	79	P18	P45	119	U10	PRDATA5
40	E16	PE4B	80	P17	P37	120	V10	PRDATA2

5.5 Pin Assignments for I/F between Header Board and Conversion Board (Connection Table)

Table 5-5 lists the pin assignments for the interface between the header board and conversion board.

Table 5-5. Pin assignments (connection table)

Conversion board edge face through hole part	Matsushita Electric Works Ltd. connector part (Conversion board/header board)	Japan Aviation Electronics Industry Ltd. connector part (Header board)	Remarks
1	CN1- 2	CN2- 101	
2	CN1- 6	CN1- 102	
3	CN1- 4	CN1- 101	
4	CN1- 1	CN1- 93	
5	CN1- 5	CN1- 90	
6	CN1- 7	CN1- 92	
7	CN1- 3, CN1- 8, CN1- 16, CN2- 8, CN2- 16	CN1- 89	V_{SS}
8	CN2- 19	CN1- 96	V_{CC}
9	CN2- 15	CN1- 77	
10	CN2- 13	CN1- 95	
11	CN2- 17	CN1- 85	
12	CN2- 20	CN1- 86	
13	CN2- 14	CN2- 95	
14	CN2- 18	CN2- 89	
15	CN2- 2	CN2- 70	
16	CN2- 6	CN2- 75	
17	CN2- 4	CN2- 69	
18	CN2- 1	CN2- 68	
19	-	-	
20	CN2- 5	CN2- 67	
21	CN2- 7	CN2- 66	
22	CN2- 3	CN2- 65	
23	CN1- 19	CN2- 62	
24	CN1- 15	CN2- 100	
25	CN1- 13	CN2- 105	
26	-	-	
27	CN1- 17	CN2- 106	
28	CN1- 20	CN2- 103	
29	CN1- 14	CN2- 99	
30	CN1- 18	CN2- 94	

Revision History

Document Revision

Document Title: MB2146-271 F^{2}MC-8FX Family SSOP-30P (0.65mm pitch) Header Board Operation Guide Document Number: 002-07494				
Revision	**ECN#**	**Issue Date**	**Origin of Change**	**Description of Change**
**	–	08/06/2007	HUAL	Initial release
*A	5287117	06/01/2016	HUAL	Migrated Spansion Guide from SS01-26025-1E to Cypress format