FUJITSU SEMICONDUCTOR
SUPPORT SYSTEM

SS01-00024-1E

F²MC Family

BGM ADAPTER

MB2146-09A-E

OPERATION MANUAL

FUJITSU

PREFACE

Thank you for purchasing the F²MC * family BGM adapter (model number: MB2146-09A-E).
The product is a development support tool for developing and evaluating applied products which use Fujitsu microcontrollers (hereafter MCUs) that have a BDSU module.
This manual describes how to handle the F²MC family BGM adapter. Be sure to read it before using the product.
For information on the MCUs supported by this product, contact the Fujitsu sales or support representative.

* : F²MC is the abbreviation of FUJITSU Flexible Microcontroller.

■ For your safety

This manual contains important information required for using the product safely. Be sure to read through the manual before using the product and follow the instructions contained therein to use it correctly.
In particular, carefully read "■ Caution of the products described in this manual" at the beginning of this manual to understand the requirements for safe use of the product before using it.
After reading the manual, keep it handy for future reference.

■ Related manuals

You should refer to the following manuals as well:

- "HARDWARE MANUAL" for each type of microcontroller
- "DATA SHEET" for each type of microcontroller
- "SOFTUNE Workbench OPERATION MANUAL"
- "SOFTUNE Workbench USER'S MANUAL"
- "SOFTUNE Workbench COMMAND REFERENCE MANUAL"

■ European RoHS compliance

Products that have a "-E" suffix at the end of the part number are products that conform to the European RoHS. Consult a Fujitsu sales or support representative for details on the products that are RoHS compliant.
Products that have a "-E" suffix on the part number have the same functionality as products with the same part number but without the "-E" suffix (RoHS non-compliant products).

■ **Caution of the products described in this document**

The following precautions apply to the product described in this manual.

⚠ WARNING	Indicates a potentially hazardous situation which, if not avoided appropriately, could result in death or serious injury and/or a fault in the user's system.

Electric shock, Damage	Before performing any operation described in this manual, turn off all the power supplies to the system. Performing such an operation with the power on may cause an electric shock or device fault.
Electric shock, Damage	Once the product has been turned on, do not touch any metal part of it. Doing so may cause an electric shock or device fault.

⚠ CAUTION	Indicates a potentially hazardous situation which, if not avoided appropriately, may result in minor or moderate injury and/or damage to the product or the equipment to which the product is connected, to software resources such as data, or to other properties.

Cuts, Damage	Before moving the product, be sure to turn off all the power supplies and unplug the cables. Watch your steps when carrying the product. Do not use the product at an unstable location such as a place exposed to strong vibration or a sloping surface. Doing so may let the product fall, resulting in an injury or fault.
Damage	Neither put anything on or apply shock to the product. Once the product has been powered, do not carry it. Doing either may cause a fault due to a load or shock.
Damage	Since the product contains many electronic components, keep it away from direct sunlight, high temperature, and high humidity to prevent condensation. Do not use or store the product where it is exposed to much dust or a strong magnetic or electric field for an extended period of time. An adverse operating or storage environment can cause a fault.
Damage	Use the product within the ranges of its general specifications. Operating it outside the range of any general specification may cause a fault.
Damage	To prevent electrostatic breakdown, do not let your finger or an object touch any metal part of the connector. Before handling the product, touch a metal object (such as a door knob) to discharge static electricity from your body.
Damage	Before turning the power on, be sure to finish making all the required connections. To set up and use the product, follow the instructions given in this document. Using the product incorrectly or inappropriately may cause a fault.
Damage	Before plugging or unplugging any cable for this product, be sure to turn the power supply off. When unplugging the cable, remove it while holding the connector without pulling the cable itself. Pulling the cable itself or bending it may expose or disconnect the cable core, resulting in a fault.
Damage	Re-transporting the product may damage it to cause a fault. Keep the packaging materials used for shipment of the product and use them when re-transporting it.

- The contents of this document are subject to change without notice.
  Customers are advised to consult with FUJITSU sales representatives before ordering.
- The information, such as descriptions of function and application circuit examples, in this document are presented solely for the purpose of reference to show examples of operations and uses of FUJITSU semiconductor device; FUJITSU does not warrant proper operation of the device with respect to use based on such information. When you develop equipment incorporating the device based on such information, you must assume any responsibility arising out of such use of the information. FUJITSU assumes no liability for any damages whatsoever arising out of the use of the information.
- Any information in this document, including descriptions of function and schematic diagrams, shall not be construed as license of the use or exercise of any intellectual property right, such as patent right or copyright, or any other right of FUJITSU or any third party or does FUJITSU warrant non-infringement of any third-party's intellectual property right or other right by using such information. FUJITSU assumes no liability for any infringement of the intellectual property rights or other rights of third parties which would result from the use of information contained herein.
- The products described in this document are designed, developed and manufactured as contemplated for general use, including without limitation, ordinary industrial use, general office use, personal use, and household use, but are not designed, developed and manufactured as contemplated (1) for use accompanying fatal risks or dangers that, unless extremely high safety is secured, could have a serious effect to the public, and could lead directly to death, personal injury, severe physical damage or other loss (i.e., nuclear reaction control in nuclear facility, aircraft flight control, air traffic control, mass transport control, medical life support system, missile launch control in weapon system), or (2) for use requiring extremely high reliability (i.e., submersible repeater and artificial satellite).
  Please note that FUJITSU will not be liable against you and/or any third party for any claims or damages arising in connection with above-mentioned uses of the products.
- Any semiconductor devices have an inherent chance of failure. You must protect against injury, damage or loss from such failures by incorporating safety design measures into your facility and equipment such as redundancy, fire protection, and prevention of over-current levels and other abnormal operating conditions.
- If any products described in this document represent goods or technologies subject to certain restrictions on export under the Foreign Exchange and Foreign Trade Law of Japan, the prior authorization by Japanese government will be required for export of those products from Japan.

Copyright ©2007 FUJITSU LIMITED All rights reserved

1. Checking the Delivered Product

Before using the product, make sure that the package contains the following items:

- BGM adapter*: 1
- USB cable (2.0m): 1
- Operation manual (Japanese version): 1
- Operation manual (English version - This document): 1

* : Referred to as the adapter.

2. Optional Parts

A variety of optional parts are available for this adapter that may be purchased separately as needed. Consult a Fujitsu sales or support representative for details.

3. Appearance and Part Names

Figures 1 and 2 show the adapter appearance, major dimensions and part names.

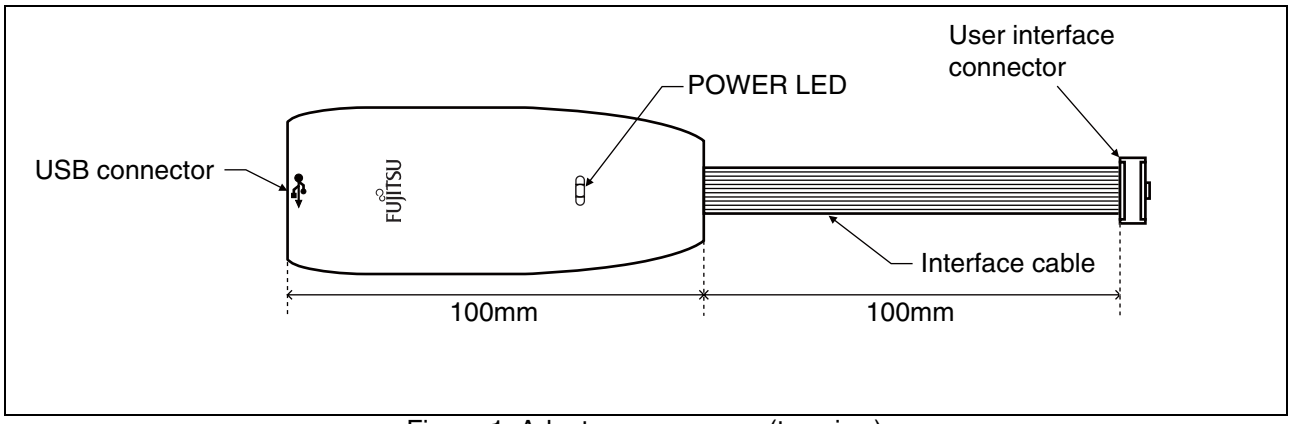

Figure 1 Adapter appearance (top view)

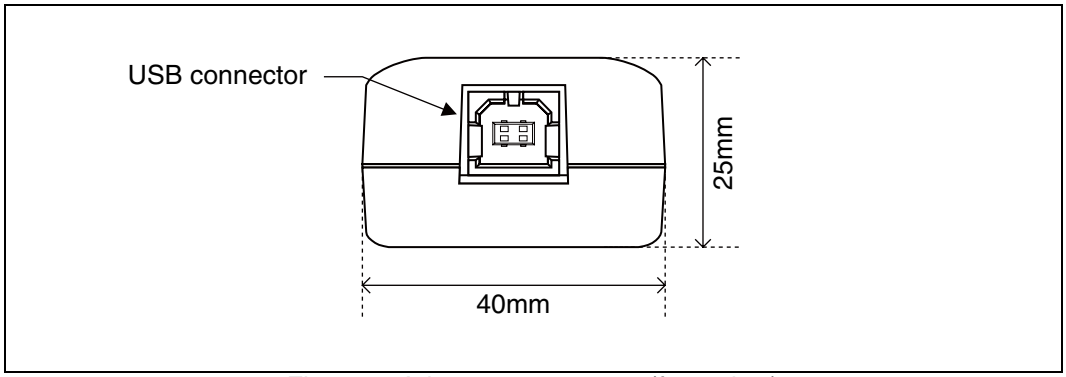

Figure 2 Adapter appearance (front view)

4. System Configuration

■ Using the adapter as an emulator system

Connect the adapter between the host computer and the user system so that the adapter can serve as an emulator under control of the host computer. For using emulator debugger software on the host computer, refer to the "SOFTUNE Workbench OPERATION MANUAL".
Figure 3 shows the system configuration when the adapter is used as an emulator system.

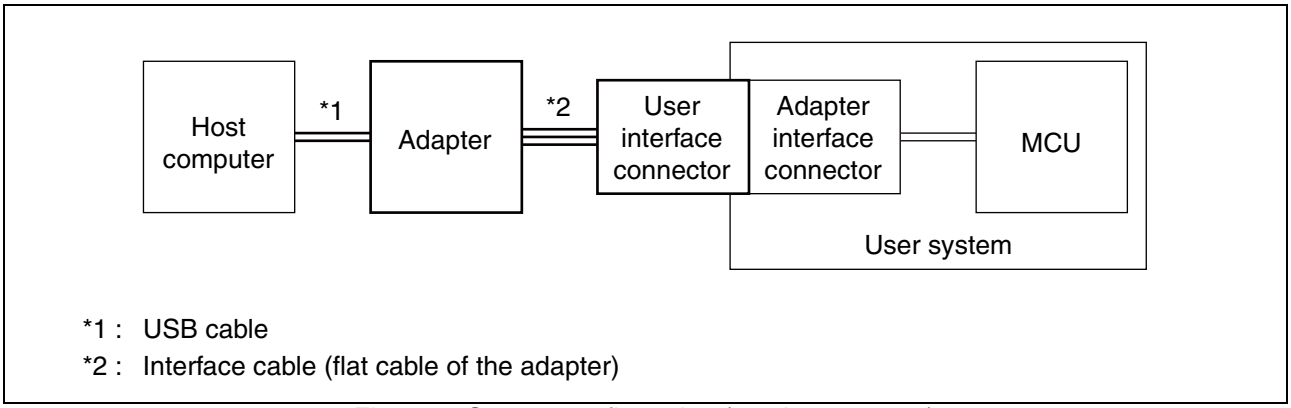

Figure 3 System configuration (emulator system)

■ Using the adapter as a USB programmer

The adapter connects the host computer and the serial interface of MCU with built-in flash memory made by Fujitsu, and writes data in a built-in flash memory.
For information on the USB programmer, contact the Fujitsu sales or support representative.
Figure 4 shows the system configuration when the adapter is used as a USB programmer.

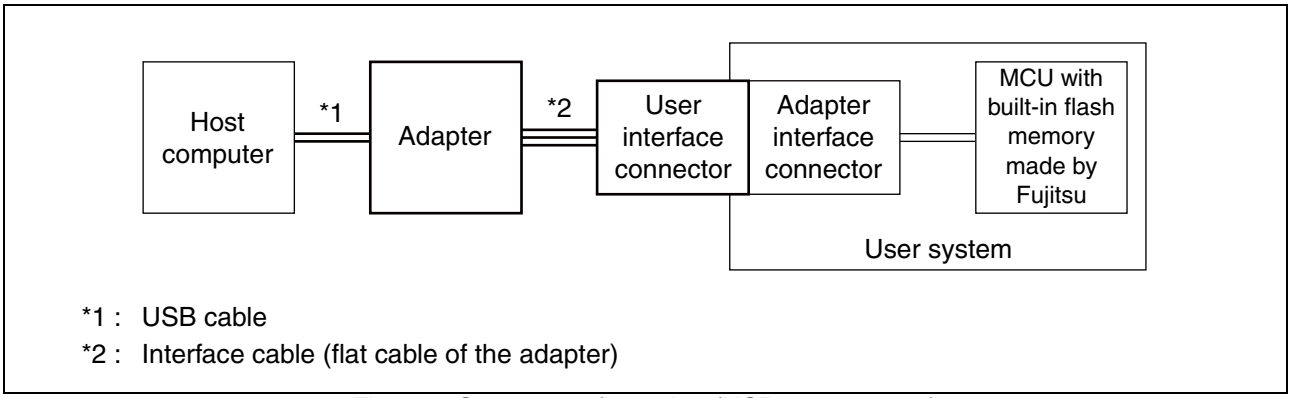

Figure 4 System configuration (USB programmer)

5. Connections

■ Connection to the host computer

Connect the adapter to the host computer using the USB cable.
Figure 5 shows how to connect the USB cable.

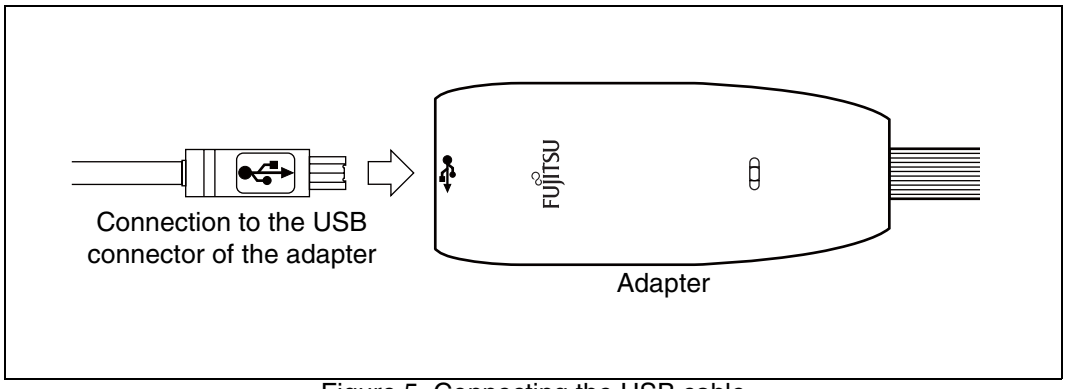

Figure 5 Connecting the USB cable

■ Connection to the user system

Connect the adapter to the user system.
Plug the user interface connector of the adapter into the adapter interface connector on the user system.
When connecting the user interface connector, align the index marks (pin 1) on each of the connectors.
For the specifications of the adapter interface connector, see "■ Adapter interface specifications" in Section 6 "Specifications".
Figure 6 shows how to connect the adapter to the user system.

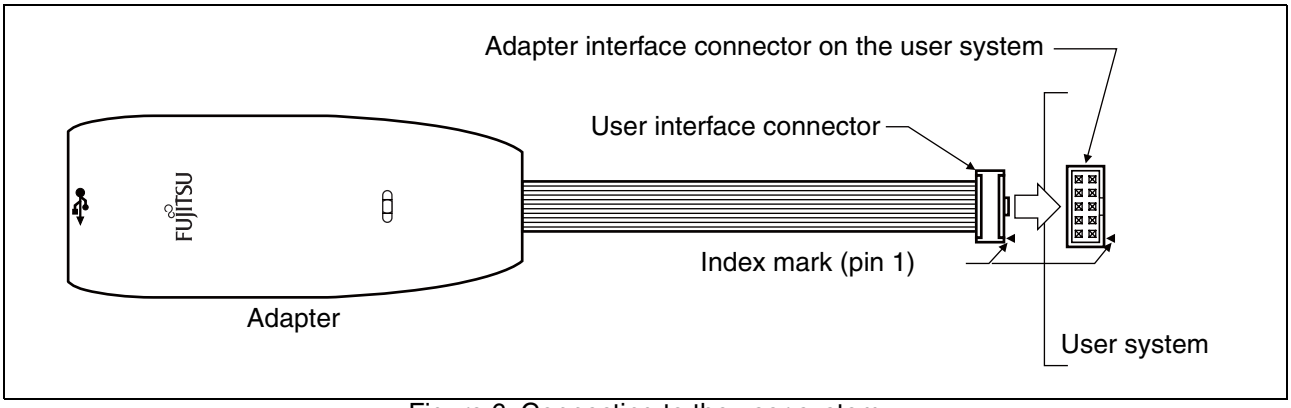

Figure 6 Connecting to the user system

6. Specifications

■ General specifications

Table 1 lists the general specifications of the adapter.

Table 1 General specifications

Item		Specification
Name		F²MC family BGM adapter
Model number		MB2146-09A-E
Power supply specifications	Adapter power input	Max: 50mA (uses USB BUS power)
	User power input	+ 2.7V to + 5.5V *1, Max: 20mA*2
POWER LED indication		[Green]: On when only adapter power is supplied (with the USB cable connected). [Red]: On when only user power is supplied. [Orange]: On when both adapter power and user power are supplied.
User interface connector *3		MIL standard compliant key type (with center key)
Operating temperature / humidity		+5 °C to +35 °C / 20% to 80% (no condensation)
Storage temperature / humidity		0 °C to +70 °C / 20% to 80% (no condensation)
Dimensions		Adapter case: 40mm (W) × 100mm (D) × 25mm (H) (excluding protrusions)
		Interface cable length: 100mm (excluding user interface connector)
Weight		55g

*1 : The maximum and minimum voltages depends on the MCU used.
For details, contact the Fujitsu sales or support representative.

*2 : Does not include the power consumption of the MCU.

*3 : The part number of the connector is: FAS-1001-2101-0BF (YAMAICHI ELECTRONICS Co., Ltd.)

■ USB line specifications

Table 2 lists the USB line specifications of the adapter.

Table 2 USB line specifications

Item	Description
Conforming standard	USB1.1
Communication method	Full speed bulk transfer
Data transfer rate	12Mbps
Connector shape	Series B
Power supply	BUS Powered

■ Tool reset specifications

A tool reset is a hardware reset by the adapter to reset the entire system of the MCU (including the BDSU module) on the user system.
When both of the adapter power and MCU's user power are turned on, the tool reset is canceled automatically to enable the MCU to be evaluated.
The following shows how to generate a tool reset and how long it remains in effect.

- Tool reset generation methods and reset "L" pulse width

1. Turn the MCU user power from "OFF" to "ON" (power-on reset).
   The reset remains in effect for about 16ms to 70ms after the MCU user power is supplied.
2. Turn the adapter power from "OFF" to "ON" (by unplugging and plugging the USB cable).
   The reset remains in effect for about 32ms to 140ms after the adapter power is supplied.

If an uncontrollable malfunction occurs in the user system and adapter that cannot be recovered using tool reset generation method 1, execute tool reset generation method 2.

■ Adapter interface specifications

The pinouts of the adapter interface connectors mounted on the user system are shown in Tables 3 and 4. The recommended connectors are listed in Table 5, and the pin configuration is shown in Figure 7.

When the adapter interface connector is mounted on the user system, connect the MCU to the adapter interface connector according to the following specifications.

Table 3 Adapter interface connector pinout (emulator system)

Connector pin number	Input / output	Evaluation MCU connection pin name	Function	Remarks
1	BGMA *1 ← MCU *2	UVCC	User power supply input	Connected to the MCUs Vcc pin.
2	-	GND	Vss pin	Connected to the MCUs Vss pin.
3	BGMA → MCU	TRESETX	Tool reset output	BDSU, Initialization of users logic, open collector output
4	BGMA → MCU	DMDX	Mode change output	0: Debug mode 1: Free run mode
5	BGMA ← MCU	SOUT	Serial data input	SD for UART
6	BGMA ← MCU	EXC	External clock input	Base clock for UART
7	BGMA → MCU	SIN	Serial data output	RD for UART
8	-	NC	-	Not used and not connected
9	-	GND	Vss pin	Connected to the MCUs Vss pin.
10	BGMA ← MCU	UVCC	User power supply input	Connected to the MCUs Vcc pin.

*1 : "BGMA" represents the BGM adapter.

*2 : "MCU" represents the evaluation MCU.

Table 4 Adapter interface connector pinout (USB programmer)

Connector pin number	Input / output	Evaluation MCU connection pin name	Function	Remarks
1	BGMA *1 ← MCU *2	UVCC	User power supply input	Connected to the MCUs Vcc pin.
2	-	GND	Vss pin	Connected to the MCUs Vss pin.
3	BGMA → MCU	RSTX	Tool reset output	BDSU, Initialization of users logic, open collector output
4	-	NC	Mode change output	Not used and not connected
5	BGMA ← MCU	UOx *3	Serial data input	SD for UART
6	BGMA → MCU	UCKx *3	Synchronous clock output	Base clock for UART
7	BGMA → MCU	UIx *3	Serial data output	RD for UART
8	-	NC	-	Not used and not connected
9	-	GND	Vss pin	Connected to the MCUs Vss pin.
10	BGMA ← MCU	UVCC	User power supply input	Connected to the MCUs Vcc pin.

*1 : "BGMA" represents the BGM adapter.

*2 : "MCU" represents the evaluation MCU.

*3 : Refer to the specifications of each of the MCUs for the serial port number that corresponds to the serial interface for the USB programmer.

Table 5 Recommended adapter interface connectors

Part number	Specifications		Manufacturer
FAP-1001-2202-0BF	Right-angle solder dip	Housing provided, Middle latch provided	YAMAICHI ELECTRONICS Co., Ltd.
FAP-1001-2204-0BF	Straight solder dip	Housing provided, Middle latch provided	
FAP-10-08#2-0BF	Right-angle solder dip	Housing provided, Latch not provided	
FAP-10-08#4-0BF	Straight solder dip	Housing provided, Latch not provided	

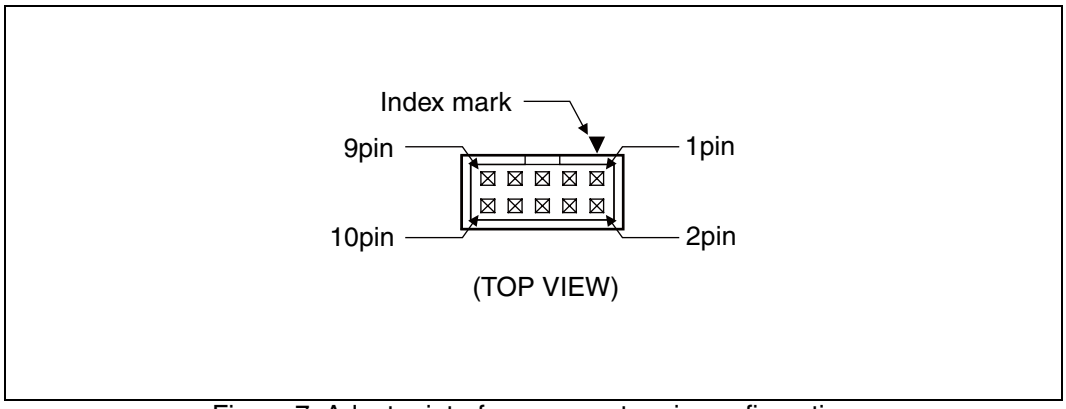

Figure 7 Adapter interface connector pin configuration

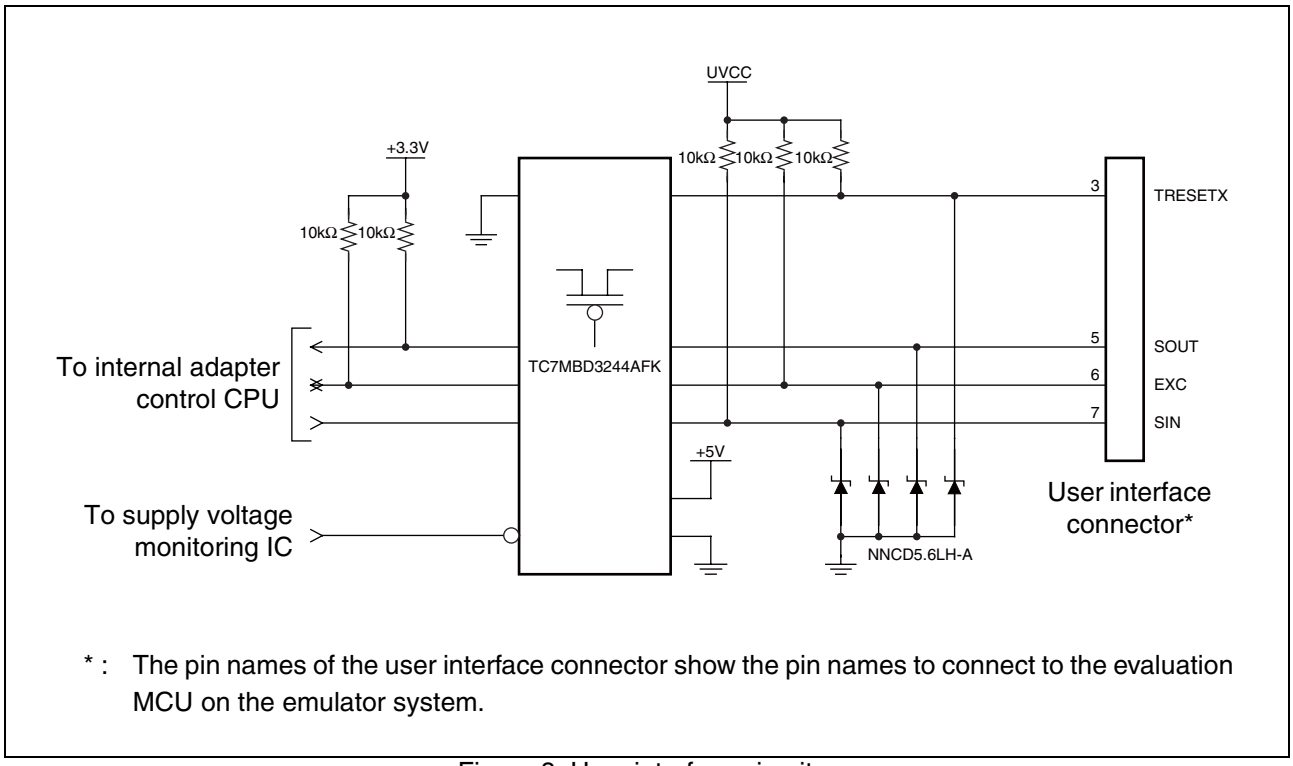

* : The pin names of the user interface connector show the pin names to connect to the evaluation MCU on the emulator system.

Figure 8 User interface circuitry

Table 6 DC specifications of the user interface

Connector pin number	Circuit type	I_{OH}*1 (mA)	I_{OL}*2 (mA)	I_{LI}*3 (μA)	Resistor connection	Remarks
3	Open drain output	-	64.0 *4	1 *4	Connected to UVCC by 10kΩ	Connected to GND via bus switch*5
5	CMOS input	-	-	± 5 *4	See Figure 8	
6	CMOS input/output	- 2.0 *4	4.0 *4	± 5 *4		
7	CMOS output	- 2.0 *4	4.0 *4	-		

*1 : The “H” level output current.

*2 : The “L” level output current.

*3 : The input leakage current.

*4 : Does not include the current through the pull-up resistance.

*5 : The voltage monitoring IC controls the on/off connection to the GND via bus switch.

SS01-00024-1E

FUJITSU SEMICONDUCTOR • SUPPORT SYSTEM

F²MC Family
BGM ADAPTER
MB2146-09A-E
OPERATION MANUAL

August 2007 the first edition

Published **FUJITSU LIMITED** Electronic Devices

Edited Business Promotion Dept.

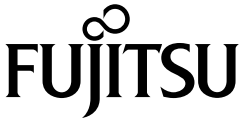
FUJITSU