KIT-CYW55310-EVAL Evaluation Kit user guide

About this document

Scope and purpose

The Infineon AIROC™ CYW55310 Bluetooth® audio development Kit (KIT-CYW55310-EVAL) enables the evaluation, prototyping, and development of a wide array of Internet of Things (IoT) and audio applications using the AIROC™ CYW55310, low-power, single-chip device that supports Bluetooth®/Bluetooth® Low Energy 5.3. The device can support Bluetooth® Low Energy audio, with LC3 codec running on the device, enabling typical smart watch audio use cases. A pair of time-division multiplexing (TDM) interfaces enables a flexible interface for various audio use cases, and a PDM interface is available for connecting digital microphones.

The CYW55310 operates over the −40°C to +85°C temperature range and is available in a 0.35 mm pitch WLBGA package with the below major features:

- Three Serial Control Blocks (SCB) and supporting I2C/SPI/UART
- 9x TCPWM blocks
- PDM interface for digital microphone support
- 12-bit ADC with seven-channel mux input for analog microphone support or seven channels of DC sensing
- A pair of time-division multiplexing (TDM) interfaces enables a flexible interface for various audio use cases
- 4-wire UART

Intended audience

This evaluation board is designed for technical specialists who are familiar with connectivity and interested in Bluetooth® Audio development. It is intended to be used under laboratory conditions.

Important notice

“Evaluation Boards and Reference Boards” shall mean products embedded on a printed circuit board (PCB) for demonstration and/or evaluation purposes, which include, without limitation, demonstration, reference and evaluation boards, kits and design (collectively referred to as “Reference Board”).

Environmental conditions have been considered in the design of the Evaluation Boards and Reference Boards provided by Infineon Technologies. The design of the Evaluation Boards and Reference Boards has been tested by Infineon Technologies only as described in this document. The design is not qualified in terms of safety requirements, manufacturing and operation over the entire operating temperature range or lifetime.

The Evaluation Boards and Reference Boards provided by Infineon Technologies are subject to functional testing only under typical load conditions. Evaluation Boards and Reference Boards are not subject to the same procedures as regular products regarding returned material analysis (RMA), process change notification (PCN) and product discontinuation (PD).

Evaluation Boards and Reference Boards are not commercialized products, and are solely intended for evaluation and testing purposes. In particular, they shall not be used for reliability testing or production. The Evaluation Boards and Reference Boards may therefore not comply with CE or similar standards (including but not limited to the EMC Directive 2004/EC/108 and the EMC Act) and may not fulfill other requirements of the country in which they are operated by the customer. The customer shall ensure that all Evaluation Boards and Reference Boards will be handled in a way which is compliant with the relevant requirements and standards of the country in which they are operated.

The Evaluation Boards and Reference Boards as well as the information provided in this document are addressed only to qualified and skilled technical staff, for laboratory usage, and shall be used and managed according to the terms and conditions set forth in this document and in other related documentation supplied with the respective Evaluation Board or Reference Board.

It is the responsibility of the customer’s technical departments to evaluate the suitability of the Evaluation Boards and Reference Boards for the intended application, and to evaluate the completeness and correctness of the information provided in this document with respect to such application.

The customer is obliged to ensure that the use of the Evaluation Boards and Reference Boards does not cause any harm to persons or third party property.

The Evaluation Boards and Reference Boards and any information in this document is provided "as is" and Infineon Technologies disclaims any warranties, express or implied, including but not limited to warranties of non-infringement of third party rights and implied warranties of fitness for any purpose, or for merchantability.

Infineon Technologies shall not be responsible for any damages resulting from the use of the Evaluation Boards and Reference Boards and/or from any information provided in this document. The customer is obliged to defend, indemnify and hold Infineon Technologies harmless from and against any claims or damages arising out of or resulting from any use thereof.

Infineon Technologies reserves the right to modify this document and/or any information provided herein at any time without further notice.

Safety precautions

***Note**: Please note the following warnings regarding the hazards associated with development systems*

Table 1 Safety precautions

	**Caution:** *The evaluation or reference board contains parts and assemblies sensitive to electrostatic discharge (ESD). Electrostatic control precautions are required when installing, testing, servicing or repairing the assembly. Component damage may result if ESD control procedures are not followed. If you are not familiar with electrostatic control procedures, refer to the applicable ESD protection handbooks and guidelines.*

Table of contents

About this document . . . 1
Important notice . . . 2
Safety precautions . . . 3
Table of contents . . . 4
1 Introduction . . . 6
1.1 Kit contents . . . 6
1.2 Kit details . . . 7
1.3 ModusToolbox™ software . . . 9
1.3.1 ModusToolbox™ code examples . . . 9
1.4 Getting started . . . 10
1.5 IoT resources and technical support . . . 10
2 Kit operation . . . 11
2.1 Theory of operation . . . 11
2.2 Jumpers . . . 15
2.3 Buttons and switches . . . 18
2.4 Arduino-compatible headers . . . 19
2.5 Other headers . . . 21
2.6 USB serial interface chip . . . 23
2.7 Kit power supply . . . 23
2.8 Test points . . . 24
2.9 Current measurement . . . 24
2.10 Pin configuration . . . 24
3 Hardware . . . 25
3.1 M.2 carrier module . . . 25
3.1.1 CYW55310 . . . 25
3.2 Baseboard . . . 25
3.2.1 Serial communication between CYW55310 and PSOC™ 5LP KitProg3 . . . 25
3.2.2 Baseboard power . . . 28
3.2.3 Device recovery and reset . . . 35
3.2.4 Digital (PDM) microphones . . . 36
3.2.5 Analog microphone . . . 37
3.2.6 Ambient light sensor . . . 38
3.2.7 User LEDs . . . 39
3.2.8 User button . . . 39
3.2.9 Potentiometer . . . 40
3.2.10 Arduino compatible headers and extended headers . . . 41
3.2.11 M.2 connector for CYW55310 carrier module . . . 43
3.2.12 JTAG connector . . . 44

Table of contents

3.2.13 UART connector . . . 45
3.3 Audio shield board . . . 45
3.3.1 Audio codec CS47L35 . . . 46
3.3.2 CITA headset connector . . . 47
3.3.3 Analog microphones . . . 47
3.3.4 Speaker output connector . . . 48
3.3.5 Shield headers . . . 48
3.3.6 User buttons . . . 49
3.3.7 Audio shield power . . . 49
3.3.8 USB serial bridge . . . 50

4 CYW55310 device I/O mapping . . . 52

5 Kit reworks . . . 56
5.1 JTAG connector mounting . . . 56
5.2 UART connector mounting . . . 56
5.3 CYW55310 device pin multiplex options . . . 57

Revision history . . . 59

Trademarks . . . 60

Disclaimer . . . 61

1 Introduction

Infineon AIROC™ CYW55310 Evaluation Kit (KIT-CYW55310-EVAL) is an excellent kit that allows developers to evaluate, prototype, and develop various Internet of Things (IoT) and Audio applications. The kit is built around the AIROC™ CYW55310, a low-power, single-chip device that supports Bluetooth®/Bluetooth® Low Energy 5.3. With this kit, you can easily evaluate the performance of the CYW55310 chip and develop applications that leverage its capabilities.

KIT-CYW55310-EVAL, ModusToolbox™ software, and tools form a powerful but easy-to-use toolset that helps the users to create Bluetooth® enabled IoT and audio solutions. The KIT-CYW55310-EVAL offers footprint compatibility with Arduino shields. The development environment is compatible with Windows, macOS, and Linux operating systems. In addition, the kit features an onboard programmer/debugger (KitProg3).

***Note**: This kit supports ModusToolbox™ software 3.8 or later.*

To order the Evaluation Kit (EVK), see KIT-CYW55310-EVAL web page or contact Infineon's support team.

1.1 Kit contents

This evaluation kit box includes the following:

- CYW55310 Evaluation Board (CYW9CPM2BASE1 + CYW55310 M.2 Card)
- Audio Shield Board (CYW9BTAUDIO5)
- USB Type-A to Type-C cable
- Quick start guide



Figure 1 KIT-CYW55310-EVAL kit contents

Figure 1 shows KIT-CYW55310-EVAL kit contents. Inspect the kit contents. If you find any part missing, contact your nearest Infineon sales office for assistance: www.infineon.com/support.

1.2 Kit details

This kit has the following features:

- CYW55310 M.2 carrier module (Vela IF310 M.2 card from Ezurio)
- Audio shield board (CYW9BTAUDIO5) for audio support
- Expansion headers compatible with Arduino shields
- One user button and two user LEDs
- One analog potentiometer and one digital ambient light sensor
- One user button and two user LEDs
- Onboard USB Type-C connector (J6) for powering, programming, and debugging purposes

Before connecting the kit to the PC, ensure that all jumpers on the baseboard and audio shield are in their default configuration as specified in Table 2 to Table 11 and shown in Figure 2.

See Getting started section for the steps to follow in order to start using the kit for development.

1 Introduction

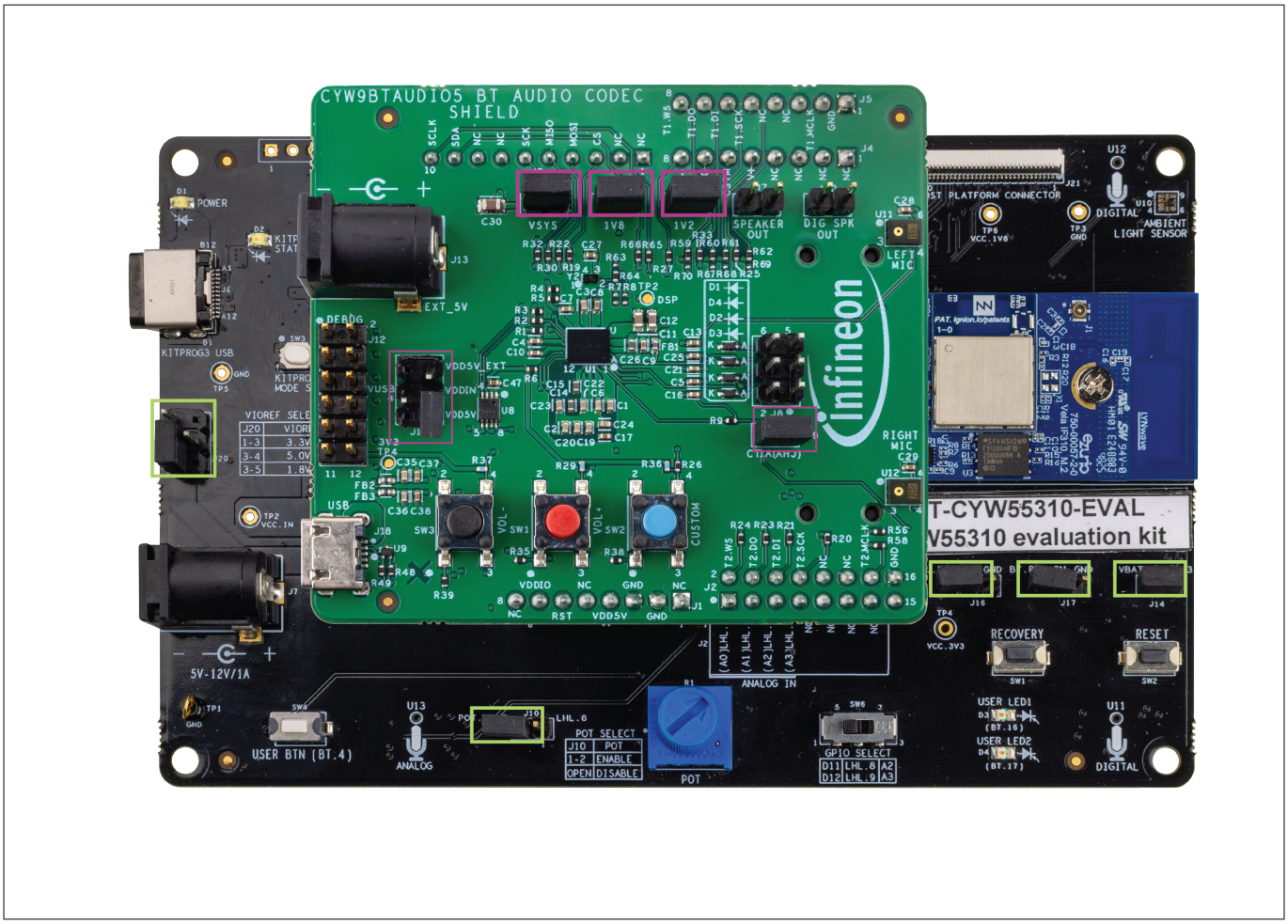

Figure 2 KIT-CYW55310-EVAL default jumper setting

Figure 3 highlights the LEDs provided on KIT-CYW55310-EVAL:

- LED1 (Yellow) indicates that VBAT power is ON.
- LED2 (Yellow) indicates KitProg3 status.
- LED3 (Red) and LED4 (Orange) are generic user LEDs controlled by GPIOs. A label on the back of the kit provides the pin mapping.

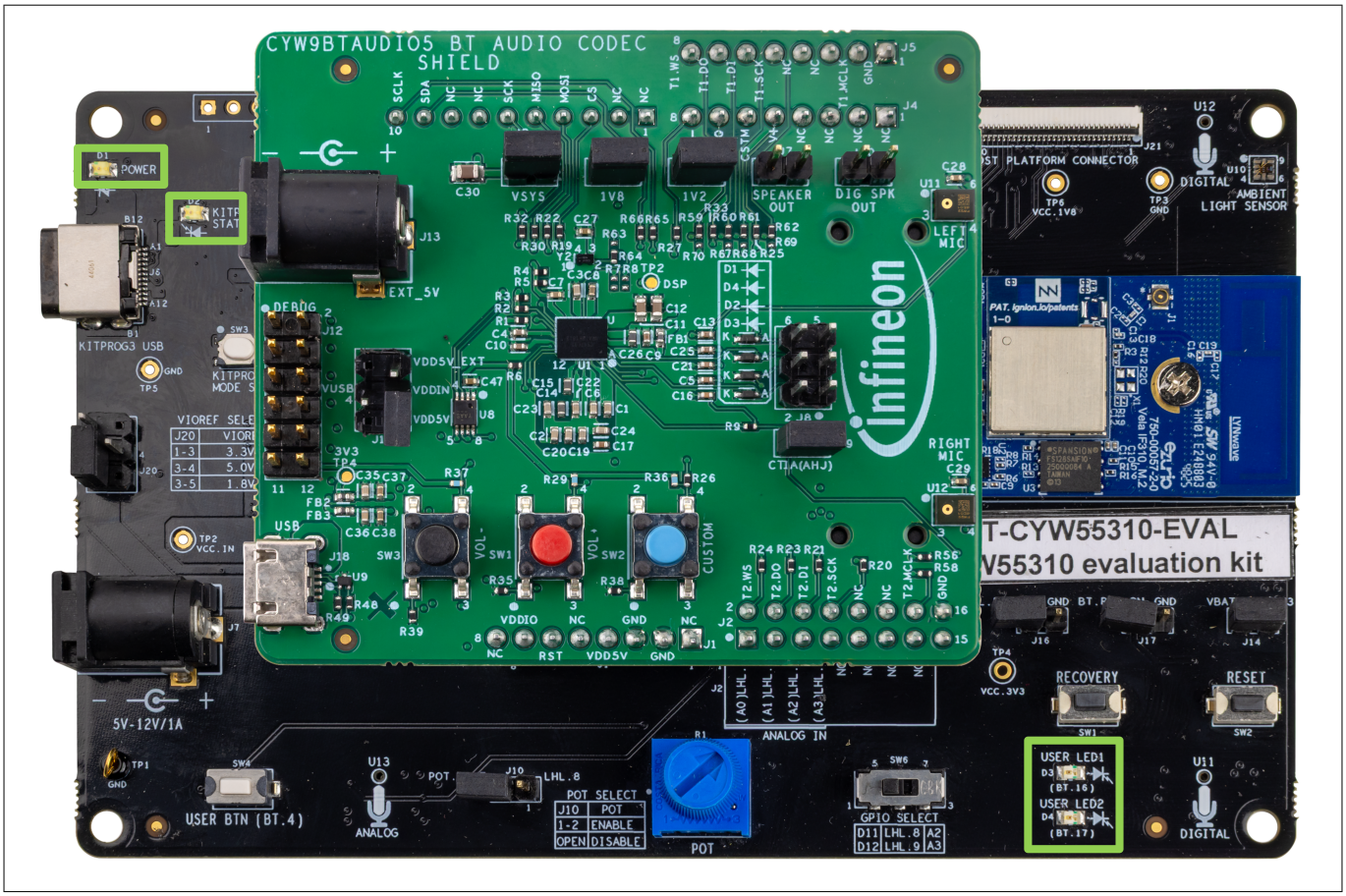

Figure 3 KIT-CYW55310-EVAL LEDs

1.3 ModusToolbox™ software

ModusToolbox™ is a free software development ecosystem that includes the Eclipse IDE for ModusToolbox™, AIROC™ BTSTACK, Bluetooth® SDK, and Wi-Fi SDK to develop applications for Infineon IoT products. Eclipse IDE for ModusToolbox™ is a multi-platform, integrated development environment (IDE) used to create new applications, update application code, change middleware settings, and program or debug applications.

Using ModusToolbox™, you can enable and configure device resources and middleware libraries, write C source code, and program and debug the device. The build system infrastructure includes the new project creation wizard that can run independently of the Eclipse IDE, the make infrastructure, and other tools. This means you can choose your compiler, RTOS, and ecosystem without compromising usability or access to our industry-leading AIROC™ Wi-Fi and Bluetooth®, CAPSENSE™ Human Machine Interface (HMI), security, and various other features.

For more details on ModusToolbox™ installation and usage, see the Eclipse IDE for ModusToolbox™ user guide.

1.3.1 ModusToolbox™ code examples

This section provides information about the code examples available for the CYW55310 device.

The code examples are part of ModusToolbox™ 3.8 version (or later) and are located under the BSP KIT-CYW55310-EVAL.

1.4 Getting started

The user guide helps you find details about the KIT-CYW55310-EVAL evaluation kit and how to use it. Follow the steps below to get started with the kit.

1. Ensure that all the jumpers are set to the default configuration, as illustrated in Figure 2
2. Connect the headset to the headset jack connector (J10) located on the Audio Shield board
3. Connect the KitProg3 USB connector (J6) to your PC using the provided USB cable and check for the power LED (D1) and Kitprog3 status LED (D2) to glow
4. Press and hold the KitProg3 mode switch (SW3) on the Baseboard for 2 seconds to enable dual UART mode. This action enables the peripheral UART COM port for logs and the HCI UART COM port for programming. To confirm that the kit is in dual UART mode, check for the blinking of the KitProg3 status LED (D2)
5. To start with the out of the box code example, press and hold the **CUSTOM** (blue) button on the audio shield for 3 seconds, and then scan for Bluetooth® devices on the phone/PC that you want to connect to this kit
6. When the kit (HSPK) is discovered, pair your phone/PC with the kit
7. Use any audio application on your device to stream audio to the kit and listen to it using the plugged-in headphones
8. Use the **VOL+** (red) and **VOL-** (black) buttons on the audio shield to increase and decrease volume or to select the next/previous audio track (long press). Use the **CUSTOM** button to play/pause the track
9. Open ModusToolbox™ (3.8 or later), program and explore the other code examples available for KIT-CYW55310-EVAL kit under the AIROC™ Connectivity BSPs
10. If you are facing issue in programming the application to the kit, follow the steps below:
    a. Press and hold the **Recover** button on the kit
    b. Press and hold the **Reset** button on the kit
    c. Release the **Reset** button
    d. After one second, release the **Recover** button
    e. Then try again

1.5 IoT resources and technical support

Infineon provides a wealth of product documentation at the Wireless Connectivity webpage to help you select the right IoT device for your design. Additionally, Infineon Developer Community offers a platform for developers to access the latest software and tools, solving common evaluation and integration problems while directly interacting with both Infineon engineers and experienced peers.

2 Kit operation

This section provides detailed instructions to setup the Infineon KIT-CYW55310-EVAL with Infineon ModusToolbox™ for Bluetooth® LE applications. It introduces KIT-CYW55310-EVAL and the features that are used as part of the kit's operation. Also, discusses the features such as Bluetooth® connectivity, programming/ debugging, and a USB-UART bridge device that can be used to communicate with the CYW55310 device on this EVK.

2.1 Theory of operation

KIT-CYW55310-EVAL is built around the CYW55310 device. Figure 4 shows the block diagram of the CYW55310 device. See the device datasheet for more details on device features.

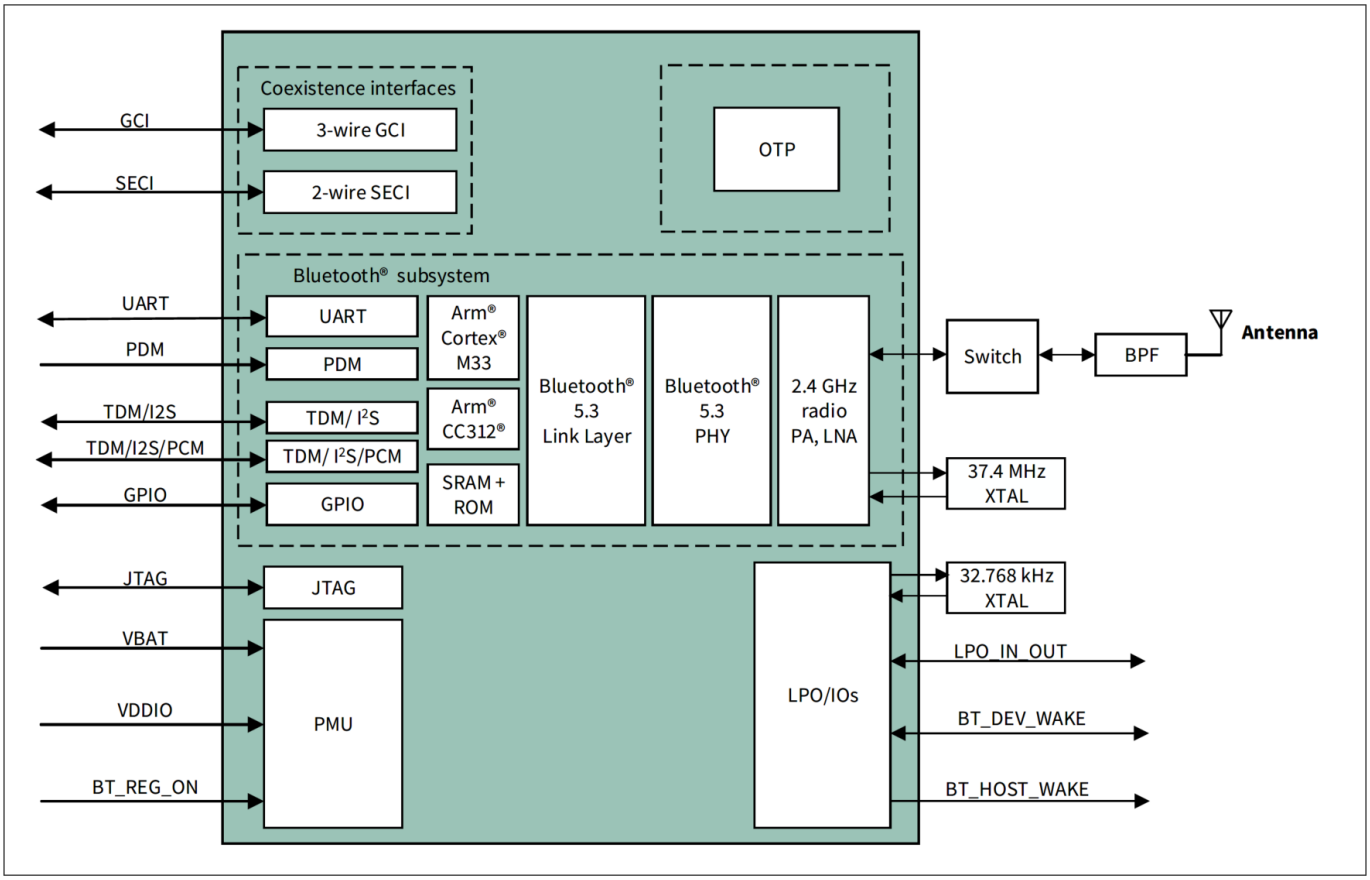

Figure 4 CYW55310 block diagram

Figure 5 illustrates the block diagram of KIT-CYW55310-EVAL. This board contains a CYW55310 device with an onboard and a USB-to-serial interface/programmer. The kit features Arduino form-factor-compatible headers, which enable Arduino shields to be plugged in, extending the EVK's capabilities. It also features one user button, a recovery button, a reset button, two user LEDs, a potentiometer, an ambient light sensor, an AMIC, and two DMICs.

Also, the Audio shield enables the user to explore various Bluetooth® audio development options with this kit.

2 Kit operation

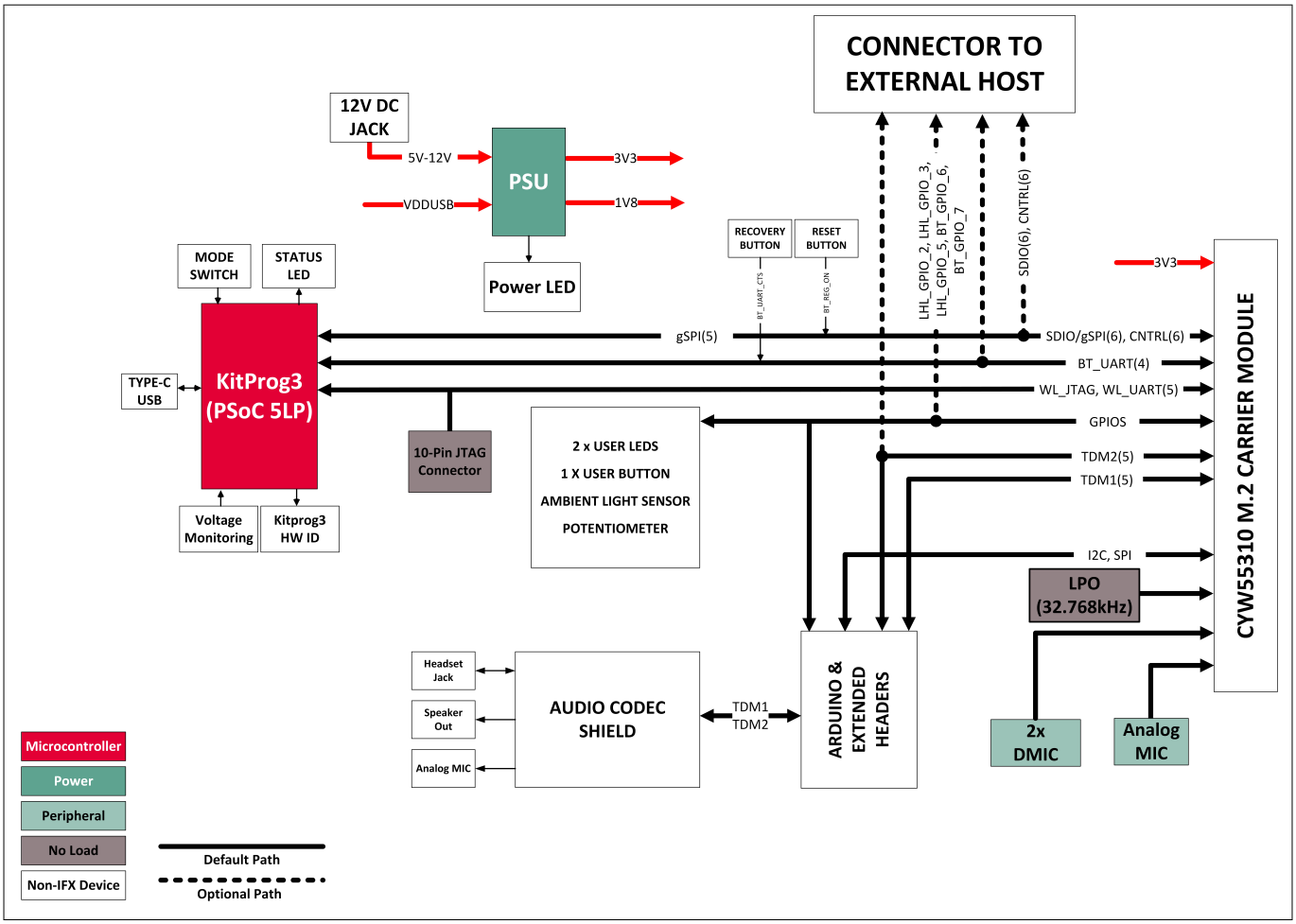

Figure 5 KIT-CYW55310-EVAL block diagram

Figure 6 and Figure 7 show the markup of the KIT-CYW55310-EVAL.

2 Kit operation

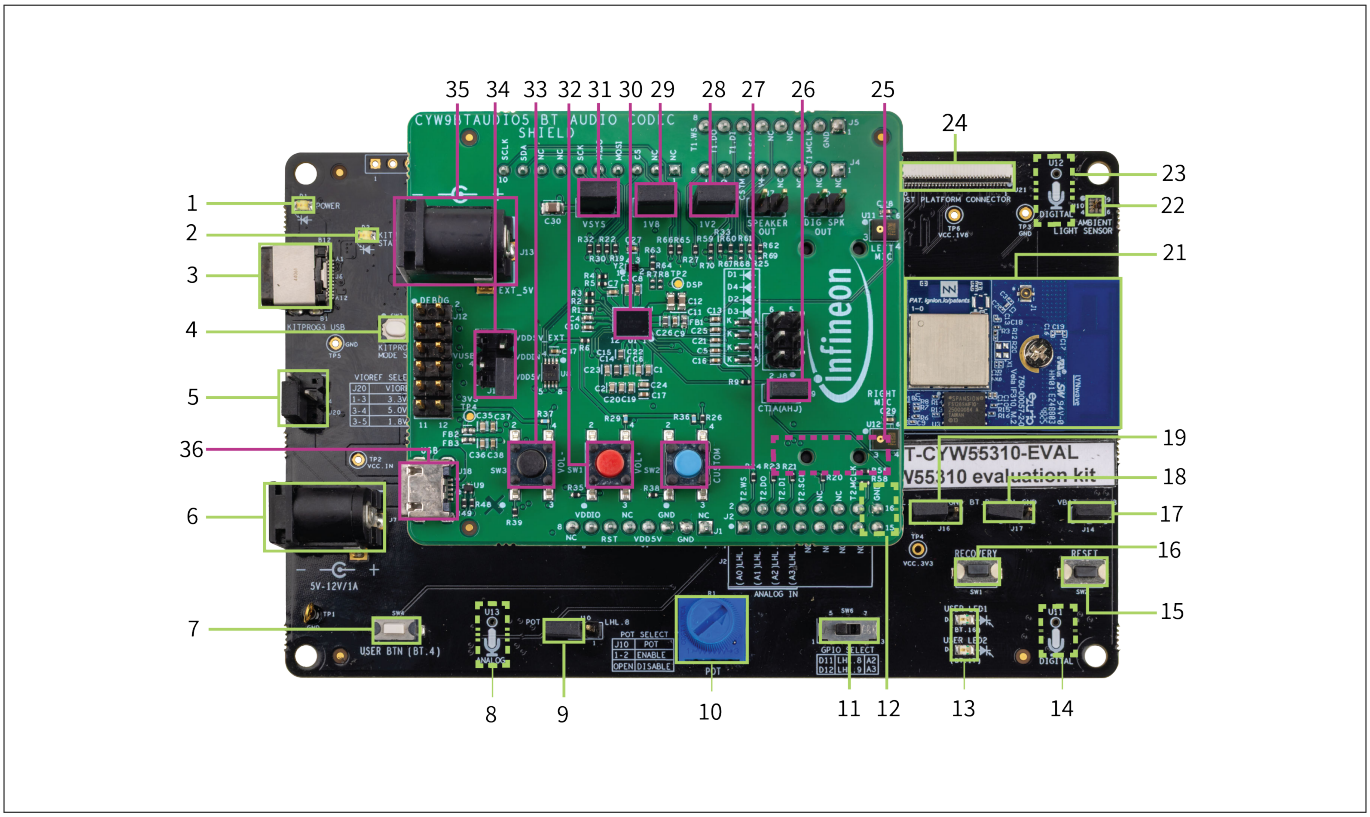

Figure 6 KIT-CYW55310-EVAL (top view)

2 Kit operation

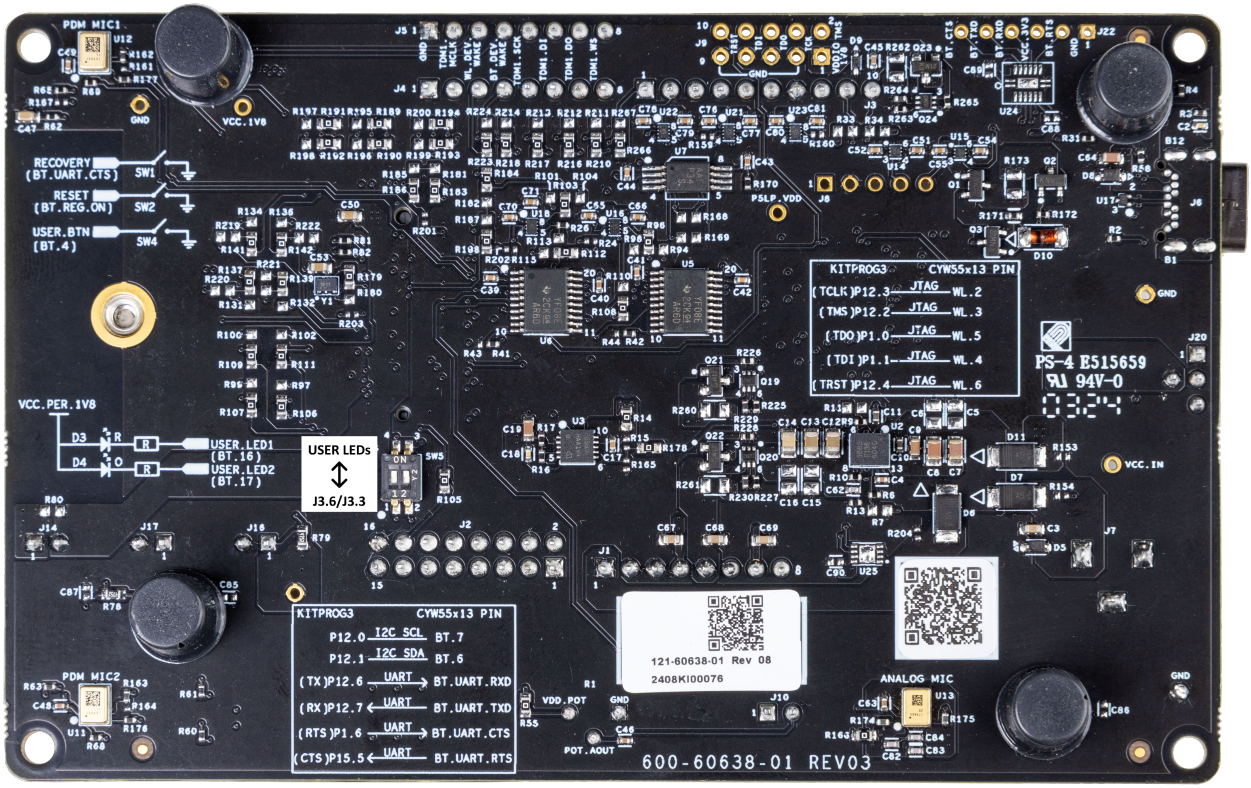

Figure 7 KIT-CYW55310-EVAL (bottom view)

KIT-CYW55310-EVAL baseboard

1. **Power LED (D1):** This LED is used to indicate the status of power supplied to the board
2. **KitProg3 status LED (D2):** This LED indicates the status of KitProg3, whether it is in single UART or dual UART mode
3. **KitProg3 USB Type-C connector (J6):** Type-C USB female connector for connecting the kit to the PC using the provided USB Type-C cable. It is used for powering the board, programming, and USB-UART communication
4. **KitProg3 mode selection button (SW3):** This button is used to change the Kitprog3 mode between single and dual UART
5. **VIOREF voltage selection jumper (J20):** This jumper is used to select the voltage level of VIOREF (Arduino shield IO supply) power source. The possible selections are 1.8 V, 3.3 V, or 5.0 V
6. **External power supply VIN connector (J7):** This is an optional power supply DC jack that support 12 V and 1 A to power the board
7. **User button (SW4):** This button provides input to the CYW55310 device. When pressed, the button connects the CYW55310 pin to the ground. Therefore, the CYW55310 pin must be configured as a digital input with a resistive pull-up to detect the button press
8. **Analog mic (U13):** This input demonstrates the analog-to-digital capability of the device
9. **Potentiometer connection jumper (J10):** This jumper is used to connect or disconnect the on-board potentiometer from the CYW55310 device
10. **Potentiometer (R1):** This component enables the kit to demonstrate the analog input capability of the CYW55310 chip
11. **GPIO select switch (SW6):** This DPDT switch is used to select the connection of GPIO from the CYW55310 to the Arduino headers

12. **LED enable/disable switch (SW5):** This switch is used to enable or disable the user LEDs by connecting or disconnecting GPIOs from CYW55310.
13. **User LEDs (D3, D4):** The CYW55310 device controls these onboard LEDs. The LEDs operate on an ACTIVELOW basis, meaning that these pins need to be driven low in order to turn the LEDs on
14. **Digital mic 1 (U11):** This digital microphone is used to demonstrate the PDM interface of the CYW55310 device
15. **Reset button (SW2):** When pressed, this button connects the BT_REG_ON pin to ground and can be used to reset the CYW55310 device
16. **Recovery button (SW1):** When pressed, this button connects the BT_UART_CTS pin to ground and can be used to force the CYW55310 device into autobaud mode
17. **VBAT current measurement jumper (J14):** This jumper is used to power the M.2 carrier module. Remove this Jumper, and connect an ammeter to measure the current supplied to the carrier module
18. **Bluetooth® section disable jumper (J17):** When mounted, this jumper connects the BT_REG_ON pin to ground and can be used to enable or disable the Bluetooth® subsystem of the device
19. **WLAN section disable jumper (J16):** When mounted, this jumper connects the WL_REG_ON pin to ground and can be used to enable or disable the WLAN subsystem of the device
20. **AIROC™ CYW55310 M.2 card:** AIROC™ low-power, single-chip device that supports Bluetooth®/Bluetooth® Low Energy 5.3. The device can support Bluetooth® Low Energy audio, with LC3 codec running on the device, enabling typical smart watch audio use cases
21. **Ambient light sensor (U10):** The on-board digital ambient light sensor can sense the ambient light intensity and provide the data to the CYW55310 device via I2C
22. **Digital mic 2 (U12):** Digital mic to demonstrate the PDM interface of the CYW55310 device
23. **External host platform interface connector (J21):** This 30-pin connector enables the CYW55310 device to connect to other host platforms using the FFC cable and FFC to M.2 Adapter card provided with the kit
24. **CTIA headset connector (J10):** Headphone connector to connect the audio headset on the audio shield
25. **CTIA headset jumper (J19):** This jumper can be used to switch support between 3-pole and 4-pole headsets for the J10 headset jack. Mounting the jumper enables support for 4-pole headsets, while leaving it unpopulated allows for 3-pole headset support
26. **Custom button (SW2):** This button on the audio shield can be used for multiple functionalities, such as Pairing, audio play/pause, and more
27. **Codec 1.2 V jumper (J15):** Current measurement header for Audio Codec 1.2 V voltage rail
28. **Codec 1.8 V jumper (J16):** Current measurement header for Audio Codec 1.8 V voltage rail
29. **Audio codec CS47L35 (U1):** Audio codec that enables audio development functions with CYW55310 device
30. **VSYS enable jumper (J14):** Current measurement header for Audio Codec 5 V voltage rail
31. **Volume increase button (SW1):** This button on the audio shield can be used for multiple functionalities such as volume increase, next track, etc. while audio streaming
32. **Volume decrease button (SW3):** This button on the audio shield can be used for multiple functionalities such as volume decrease, previous track, etc. while audio streaming
33. **VDDIN selection jumper (J17):** This header can be used to select the 5V input supply for the audio shield. The default selection enables powering from the baseboard
34. **External 5 V DC Jack (J13):** This is an optional power supply DC jack that support 5 V and 1 A to power the audio shield board
35. **Micro-USB connector for USB-I2C bridge (J18):** Micro-USB Connector for alternate power supply option to audio shield board and, USB to serial communication bridge to the audio codec

2.2 Jumpers

Table 2 to Table 6 list the jumper settings on the KIT-CYW55310-EVAL.

Table 2 Baseboard jumper J14 pin configuration

Baseboard Jumper J14 (VBAT current measurement)	Default state	Connection on CYW55310	Description
1 and 2	Shorted	VBAT	Short this jumper to supply power to the VBAT of CYW55310. In addition, use this jumper to measure the current consumption of the VBAT domain.

Table 3 Baseboard jumper J16 pin configuration

Baseboard jumper J16 (WLAN Disable)	Default state	Connection on CYW55310	Description
1 and 2	Open	NA	Short this jumper to disable the WLAN section of the radio module on the M.2 carrier board.

***Note**: As the CYW55310 device is only a BT chip, the WL_REG_ON pin will not be available.*

Table 4 Baseboard jumper J17 pin configuration

Baseboard jumper J17 (BT Disable)	Default state	Connection on CYW55310	Description
1 and 2	Open	BT_REG_ON	Short this jumper to disable the BT subsystem of the CYW55310 device.

Table 5 Baseboard jumper J10 pin configuration

Baseboard jumper J10 (Potentiometer enable)	Default state	Connection on CYW55310	Description
1 and 2	Open	LHL_GPIO_8	Short this jumper to connect the onboard potentiometer to CYW55310.

Table 6 Baseboard jumper J20 pin configuration

Baseboard jumper J20 (Arduino header VIOREF select)	Default state	Connection on CYW55310	Description
1 and 3	Open	NA	Short these pins to supply 3.3 V to the VIOREF of the Arduino header.

(table continues...)

Table 6 (continued) Baseboard jumper J20 pin configuration

Baseboard jumper J20 (Arduino header VIOREF select)	Default state	Connection on CYW55310	Description
3 and 4	Open		Short these pins to supply 5.0 V to the VIOREF of the Arduino header.
3 and 5	Shorted		Short these pins to supply 1.8 V to the VIOREF of the Arduino header.

Table 7 Audio shield jumper J14 pin configuration

Audio shield jumper J14 (VSYS current measurement)	Default state	Connection on CS47L35 codec	Description
1 and 2	Shorted	SPKVDD	Short this jumper to provide power to the Core supply of CS47L35 codec. In addition, this jumper can be used to measure the current consumption of the VSYS domain.

Table 8 Audio shield jumper J15 pin configuration

Audio shield jumper J15 (CODEC_1V2 current measurement)	Default state	Connection on CS47L35 codec	Description
1 and 2	Shorted	CPVDD2 DCVDD FLVDD	Short this jumper to provide power to the 1.2 V rail of CS47L35 codec. In addition, this jumper can be used to measure the current consumption of codec from 1.2 V domain.

Table 9 Audio shield jumper J16 pin configuration

Audio shield jumper J16 (CODEC_1V8 current measurement)	Default state	Connection on CS47L35 codec	Description
1 and 2	Shorted	AVDD CPVDD1	Short this jumper to provide power to the 1.8 V rail of CS47L35 codec. In addition, this jumper can be used to measure the current consumption of codec from 1.8 V domain.

Table 10 Audio shield jumper J17 pin configuration

Audio shield jumper J17 (VDDIN 5V input selection jumper)	Default state	Connection on CS47L35 codec	Description
1 and 3	Shorted	NA	Short these pins to supply 5.0 V to the shield from the baseboard (J1).
3 and 4	Open		Short these pins to supply 5.0 V to the shield from the micro USB connector (J18).
3 and 5	Open		Short these pins to supply 5.0 V to the shield from the DC jack connector (J13).

Table 11 Audio shield jumper J19 pin configuration

Audio shield jumper J19 (Headset pole selection jumper)	Default state	Connection on CS47L35 codec	Description
1 and 2	Shorted	MICBIAS1B IN1BLP	If this jumper is open headset jack (J10) supports 3 pole headphone. Short this jumper to support CTIA 4 pole headset on the audio jack (J10)

2.3 Buttons and switches

Table 12 lists the buttons and switches on the KIT-CYW55310-EVAL.

Table 12 Baseboard button/switch functionality

Baseboard buttons/switch	Pressed state	Connection on CYW55310	Description
SW1	GND	BT_UART_CTS	Active low recovery button (black)
SW2	GND	BT_REG_ON	Active low reset button (black)
SW3	GND	NA	Switch to change the KP3 mode
SW4	GND	BT_GPIO_4	User application button (white)
SW5	NA	BT_GPIO_16 BT_GPIO_17	User LED1 and User LED2 enable/disable switch
SW6	NA	LHL_GPIO_8 LHL_GPIO_9	Arduino GPIO ADC/SPI selection switch

Table 13 Audio shield Button/Switch functionality

Audio shield button/ switch	Pressed state	Connection on CYW55310	Description
SW1	GND	BT_GPIO_4	Volume increase button(Red)
SW2	GND	LHL_GPIO_6	Custom button(Blue)
SW3	GND	BT_GPIO_5	Volume decrese button(Black)

2.4 Arduino-compatible headers

J1, J2, J3, J4, and J5 are Arduino shield-compatible headers.

Table 14 Header J1 pin configuration

Header J1	Arduino compatible pin	Connection on CYW55310	Description
1	VIN	NA	Input supply (5 V - 12 V) option to the kit from the Arduino shield
2	GND	GND	Ground
3	GND	GND	Ground
4	5V0	NA	5 V supply output to the Arduino shield
5	3V3	NA	3.3 V supply output to the Arduino shield
6	RESET	NA	Arduino shield reset from KP3
7	VIOREF	NA	I/O reference pin used by shields to determine the I/O voltage. It can be changed to 1.8 V, 3.3 V, and 5 V with J20 configuration.
8	NC	NC	No connect

Table 15 Header J2 pin configuration

Header J2	Arduino compatible pin	Connection on CYW55310	Description
1	A0	LHL_GPIO_4	LHL GPIO
2	NA	TDM2_WS	TDM2 interface word select
3	A1	LHL_GPIO_5	LHL GPIO
4	NA	TDM2_SDO	TDM2 interface data out
5	A2	LHL_GPIO_8	LHL GPIO
6	NA	TDM2_SDI	TDM2 interface data in
7	A3	LHL_GPIO_9	LHL GPIO
8	NA	TDM2_SCK	TDM2 interface slave clock
9	NC	NA	No connect

(table continues...)

Table 15 (continued) Header J2 pin configuration

Header J2	Arduino compatible pin	Connection on CYW55310	Description
10	NC	NA	No connect
11	NC	NA	No connect
12	NC	NA	No connect
13	NC	NA	No connect
14	NA	TDM2_MCK	TDM2 interface master clock
15	NC	NA	No connect
16	GND	GND	Ground

Table 16 Header J3 pin configuration

Header J3	Arduino compatible pin	Connection on CYW55310	Description
1	D8	NC	No Connect
2	D9	BT_GPIO_2	BT GPIO
3	D10	BT_GPIO_16	BT_GPIO
4	D11	LHL_GPIO_8	LHL GPIO
5	D12	LHL_GPIO_9	LHL GPIO
6	D13	BT_GPIO_17	BT GPIO
7	GND	GND	Ground
8	NC	NC	No connect
9	SDA	BT_GPIO_6	BT GPIO
10	SCL	BT_GPIO_7	BT GPIO

Table 17 Header J4 pin configuration

Header J4	Arduino compatible pin	Connection on CYW55310	Description
1	D0	LHL_GPIO_3	LHL GPIO
2	D1	LHL_GPIO_2	LHL GPIO
3	D2	BT_GPIO_3	BT GPIO
4	D3	NC	No connect
5	D4	BT_GPIO_4	BT GPIO
6	D5	LHL_GPIO_6	LHL_GPIO
7	D6	BT_GPIO_0	BT GPIO
8	D7	BT_GPIO_5	BT GPIO

Table 18 Header J5 pin configuration

Header J5	Arduino compatible pin	Connection on CYW55310	Description
1	NA	GND	Ground
2	NA	TDM1_MCK	TDM1 interface master clock
3	NA	WL_DEV_WAKE	WLAN device wake
4	NA	BT_DEV_WAKE	Bluetooth® device wake
5	NA	TDM1_SCK	TDM1 interface slave clock
6	NA	TDM1_DI	TDM1 interface data in
7	NA	TDM1_DO	TDM1 interface data out
8	NA	TDM1_WS	TDM1 interface word select

***Note**: The J5 header and even pins of the J2 header are not compatible with standard Arduino pinout and are compatible with the custom audio codec shield from Infineon for the BT audio support.*

2.5 Other headers

J9 is the JTAG/COEX header, which brings out the WL GPIOs of the CYW55310 device (not mounted by default; see the Kit reworks chapter for use).

Table 19 Header J9 pin configuration

Header J9	Pin name	Connection on CYW55310	Description
1	VDDIO_1V8	NA	1.8 V supply to the external debugger
2	TMS	GPIO_3	WL GPIO
3	GND	GND	Ground
4	TCK	GPIO_2	WL GPIO
5	GND	GND	Ground
6	TDO	GPIO_5	WL GPIO
7	GND	GND	Ground
8	TDI	GPIO_4	WL GPIO
9	GND	GND	Ground
10	TRST	GPIO_6	WL GPIO

J22 is a UART programming header using an external device that brings out the HCI UART pins of the CYW55310 device (not mounted by default; see the Kit reworks chapter for use).

Table 20 Header J22 pin configuration

Header J22	Pin name	Connection on CYW55310	Description
1	GND	GND	Ground

(table continues...)

Table 20 (continued) Header J22 pin configuration

Header J22	Pin name	Connection on CYW55310	Description
2	UART_RTS	BT_UART_RTS_N	UART request-to-send. Active-low request-to-send signal for the HCI UART interface.
3	VCC_3V3	NA	3.3 V supply
4	UART_RXD	BT_UART_RXD	UART serial input. Serial data input for the HCI UART interface.
5	UART_TXD	BT_UART_TXD	UART serial output. Serial data output for the HCI UART interface.
6	UART_CTS	BT_UART_CTS_N	UART clear-to-send. Active-low clear-to-send signal for the HCI UART interface.

J21 is the 30-pin external host interface connector that enables the kit to connect the CYW55310 device to other host platforms via the FFC-M.2 adapter card. See the Kit reworks chapter to use this connector.

Table 21 Header J21 pin configuration

Header J21	Pin name	Connection on CYW55310	Description
1	EX_LHL_GPIO_3/ UART_RXD	LHL_GPIO_3	LHL GPIO
2	EX_LHL_GPIO_2/ UART_TXD	LHL_GPIO_2	LHL_GPIO
3	WL_DEV_WAKE_M2	WL_DEV_WAKE	WLAN device wake
4	EX_LHL_GPIO_5/ UART_RTS	LHL_GPIO_5	LHL GPIO
5	BT_GPIO_7	BT_GPIO_7	BT GPIO
6	BT_GPIO_6	BT_GPIO_6	BT GPIO
7	WL_REG_ON_M2	WL_REG_ON	Enable it for WLAN section power supply. Not used in the CYW55310 device, connected to GND on the device side.
8	BT_REG_ON_M2	BT_REG_ON	Used by the PMU to power on or power off the internal CYW55310 regulators used by the Bluetooth® section.
9	EX_LPO_IN_3V3	LPO_IN_OUT	LPO clock input from external host board
10	BT_DEV_WAKE_M2	BT_DEV_WAKE	Bluetooth® device wake
11	GND	GND	Ground
12	EX_BT_UART_CTS	BT_UART_CTS_N	UART clear-to-send. Active-low clear-to-send signal for the HCI UART interface.
13	EX_BT_UART_RTS	BT_UART_RTS_N	UART request-to-send. Active-low request-to-send signal for the HCI UART interface.

(table continues...)

Table 21 (continued) Header J21 pin configuration

Header J21	Pin name	Connection on CYW55310	Description
14	EX_BT_UART_RXD	BT_UART_RXD	UART serial input. Serial data input for the HCI UART interface.
15	EX_BT_UART_TXD	BT_UART_TXD	UART serial output. Serial data output for the HCI UART interface.
16	GND	GND	Ground
17	BT_HOST_WAKE_M2	BT_HOST_WAKE	Bluetooth® host wake
18	GPIO0_WL_HOST_WAKE_M2	GPIO_0	WLAN host wake
19	GND	GND	Ground
20	EX_TDM2_DI	TDM2_DI	TDM2 interface data in
21	EX_TDM2_DO	TDM2_DO	TDM2 interface data out
22	EX_TDM2_WS	TDM2_WS	TDM2 interface word select
23	EX_TDM2_SCK	TDM2_SCK	TDM2 interface slave clock
24	GND	GND	Ground
25	EXT_SDIO_DATA3	SDIO_DATA_3	SDIO data line 3
26	EXT_SDIO_DATA2	SDIO_DATA_2	SDIO data line 2
27	EXT_SDIO_DATA1	SDIO_DATA_1	SDIO data line 1
28	EXT_SDIO_DATA0	SDIO_DATA_0	SDIO data line 0
29	EXT_SDIO_CMD	SDIO_CMD	SDIO command line
30	EXT_SDIO_CLK	SDIO_CLK	SDIO clock input

2.6 USB serial interface chip

A CY8C5868LTI-LP039 PSOC™ 5LP chip is used for onboard programming and USB-serial functionality. It connects the kit to the PC over a USB interface and to the CYW55310 device through the HCI, peripheral UARTs, and I2C pins. Optional SPI and JTAG connectivity are also supported by this chip.

2.7 Kit power supply

The KIT-CYW55310-EVAL kit can be powered with the following power inputs:

- USB Type-C connector (J6)
- 5 V - 12 V, 1 A DC jack (J7)
- VIN pin of the J1 header (J1.1)

The input supply is provided to the buck regulator to generate 3.3 V for the VBAT supply of the device, and from the same 3.3 V; for the peripherals, 1.8 V is generated using an LDO. For more details about the power regulators, see the Hardware section.

2.8 Test points

There are three ground test points for easy connection of probes. Table 22 lists voltage at various domains that can be measured from their respective test points on the baseboard.

Table 22 Test points in KIT-CYW55310-EVAL

Label	Description
TP1, TP3, TP5	Ground
TP2	Input supply test point, VCC_IN
TP4	3.3 V rail test point, VCC_3V3
TP6	1.8 V rail test point, VCC_1V8
TP7	P5LP supply test point, P5LP_VDD

2.9 Current measurement

KIT-CYW55310-EVAL has a VBAT (3.3 V) power domain to power the CYW55310 device. Current consumption of the M.2 carrier module with the CYW55310 device can be found out from the current consumed by the VBAT domain.

***Note**: To measure the current consumed by the VBAT domain, connect an ammeter across pin 1 and pin 2 of the jumper J14 on the baseboard.*

2.10 Pin configuration

GPIOs on the CYW55310 device can be multiplexed to various peripherals. For more information on the peripherals that can be routed to the various GPIOs; see the device datasheet.

3 Hardware

This section describes the KIT-CYW55310-EVAL kit hardware and its different blocks, such as the power supply, reset control, Arduino-compatible headers, other connectors, and peripherals. This kit consists of two boards: a baseboard with all peripherals and interconnect options and an M.2 carrier module with the CYW55310 device and audio shield board with the audio codec and audio interfaces.

See the KIT-CYW55310-EVAL kit webpage for schematics and design files of the baseboard, M.2 carrier module, and audio shield.

3.1 M.2 carrier module

The baseboard design of the KIT-CYW55310-EVAL board is designed to be modular so that different carrier modules can be used with the same baseboard. In this kit, the Vela IF310 - Bluetooth® Classic and LE Audio M.2 carrier radio module, from Ezurio which employs the CYW55310 device, is connected to the baseboard through the M.2 interface.

The carrier module interface is a generic interface used across many devices. See device I/O mapping for a detailed interface description. UART signals and GPIOs are moved out from module pins to interface with the baseboard.

3.1.1 CYW55310

The CYW55310 is a low-power, single-chip device that supports Bluetooth®/Bluetooth® Low Energy 5.3. The device can support Bluetooth® Low Energy audio, with LC3 codec running on the device, enabling typical smart watch audio use cases. A pair of time-division multiplexing (TDM) interfaces enables a flexible interface for various audio use cases, and a PDM interface is available for connecting digital microphones. The CYW55310 operates over the -40°C to +85°C temperature range, and is available in 0.35 mm pitch WLBGA package.

3.2 Baseboard

CYW9CPM2BASE1 is the baseboard on which the CYW55310 M.2 carrier module (Vela IF310 - Bluetooth® Classic and LE Audio) is mounted. The baseboard is interfaced with the M.2 carrier module through the M.2 E-Key connector, and it provides different peripherals and extended connectors to demonstrate the capabilities of the CYW55310 device.

3.2.1 Serial communication between CYW55310 and PSOC™ 5LP KitProg3

The onboard CY8C5868LTI-LP039 PSOC™ 5LP device is a true programmable embedded system-on-chip responsible for two-channel USB-serial conversion on this baseboard. The USB-serial pins of the PSOC™ 5LP device are hard-wired to the HCI UART pins of the CYW55310 device. Also, one peripheral UART from the device also connected to the P5LP device, which can also be accessed via USB.

Mode switch SW3 can be used to switch between single and dual UART modes of operation of KitProg3. The status LED (LED2) indicates the current mode of KitProg3.

This kit supports a special operating mode that allows for two UART connections rather than a single UART plus bridging (USB-I2C or USB-SPI). To enter UARTx2 when the kit is in CMSIS-DAP Bulk or HID mode, press and hold the mode switch for at least two seconds. In UARTx2 mode, the KP3 status LED (LED2) blinks for 1 second at 2 Hz, then stays on for another second. To exit, press and hold the mode switch for at least two seconds. You can return to CMSIS-DAP Bulk mode.

***Note**: In single UART mode, only HCI UART will be connected to the USB, and for the debug logs, peripheral UART need to be enabled, and KP3 mode needs to be changed to dual-UART mode.*

3 Hardware

KP3 supports other serial bridges like USB-I2C and USB-SPI, as well as USB-JTAG for debugging. All serial interfaces are connected through Level translators, as the P5LP device supports 5 V and the CYW55310 device supports 1.8 V.

***Note**: In KitProg3, 3[5] pin can be used for GPIO bridging. This pin is unidirectional (available signal transmittance only from CYW55310 to KitProg3) and the state of 3[5] pin can only read by kitprog3.*

3 Hardware

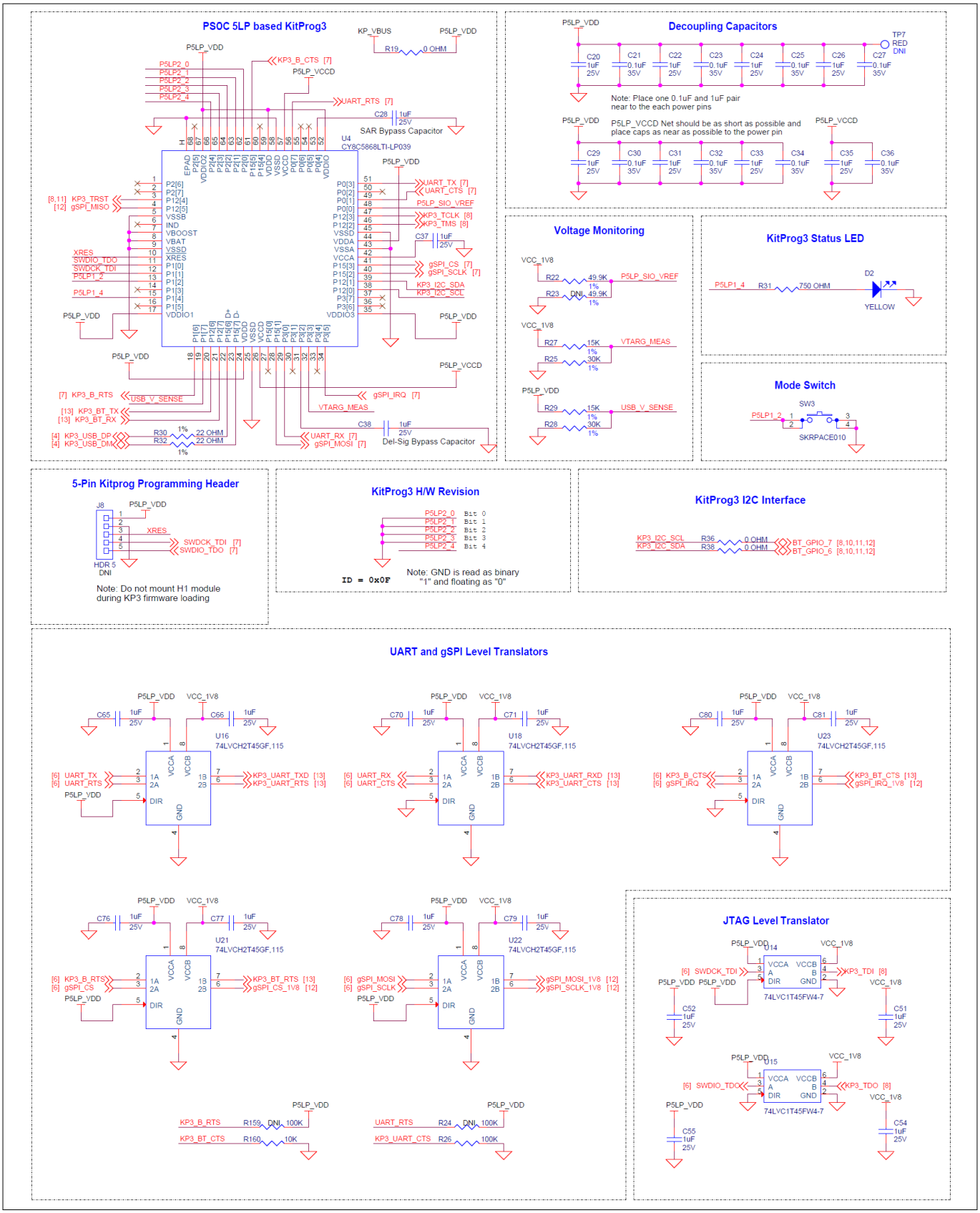

Figure 8 **Serial communication between CYW55310 and PSOC™ 5LP KitProg3 with level translators**

3.2.2 Baseboard power

The major power supply source to this kit is the USB Type-C connector (J6) with a 20 V overvoltage protection circuit. The kit also has one optional power supply option, 5 V - 12 V DC Jack (J7). These input source sections have transient voltage suppression (TVS-diode) to provide ESD protection for the power source at the connector. The amber power LED is connected to the VCC_3V3 rail through a current-limiting resistor to indicate the board power is ON.

The PSOC™ 5LP (KitProg3) is powered from the KP_VBUS rail with a 0 Ω resistor/jumper in series so that PSOC™ 5LP can be disconnected from the supply rail or used as a current measurement jumper. On the other hand, KP_VBUS also goes to the Arduino header (J1) as VCC_ARD_5V0 through a reverse voltage protection circuit.

The kit has a buck regulator that generates 3.3 V from the input sources, which are combined through ORing diodes. Generated 3.3 V will be used for VBAT supply to the CYW55310 device through a current measurement jumper (J14). This 3.3 V supply is also fed to one LDO to generate 1.8 V for other peripherals on the baseboard.

5 V and 3.3 V are going to the Arduino headers via reverse voltage protection circuits, and VIOREF voltage going to the Arduino header (J1) can be selected with the jumper configuration on the J20 header.

Figure 9 shows the power architecture of the KIT-CYW55310-EVAL.

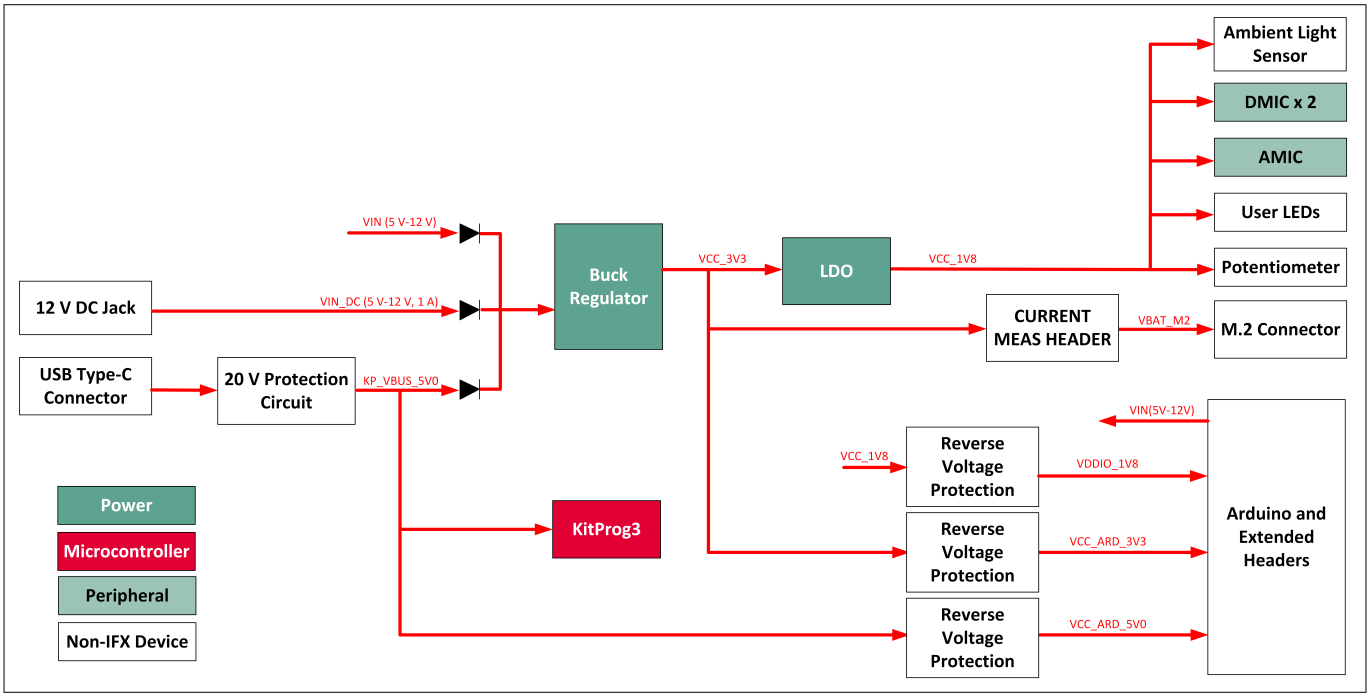

Figure 9 Power architecture of KIT-CYW55310-EVAL

The schematics of the power supply sections of the kit are provided below.

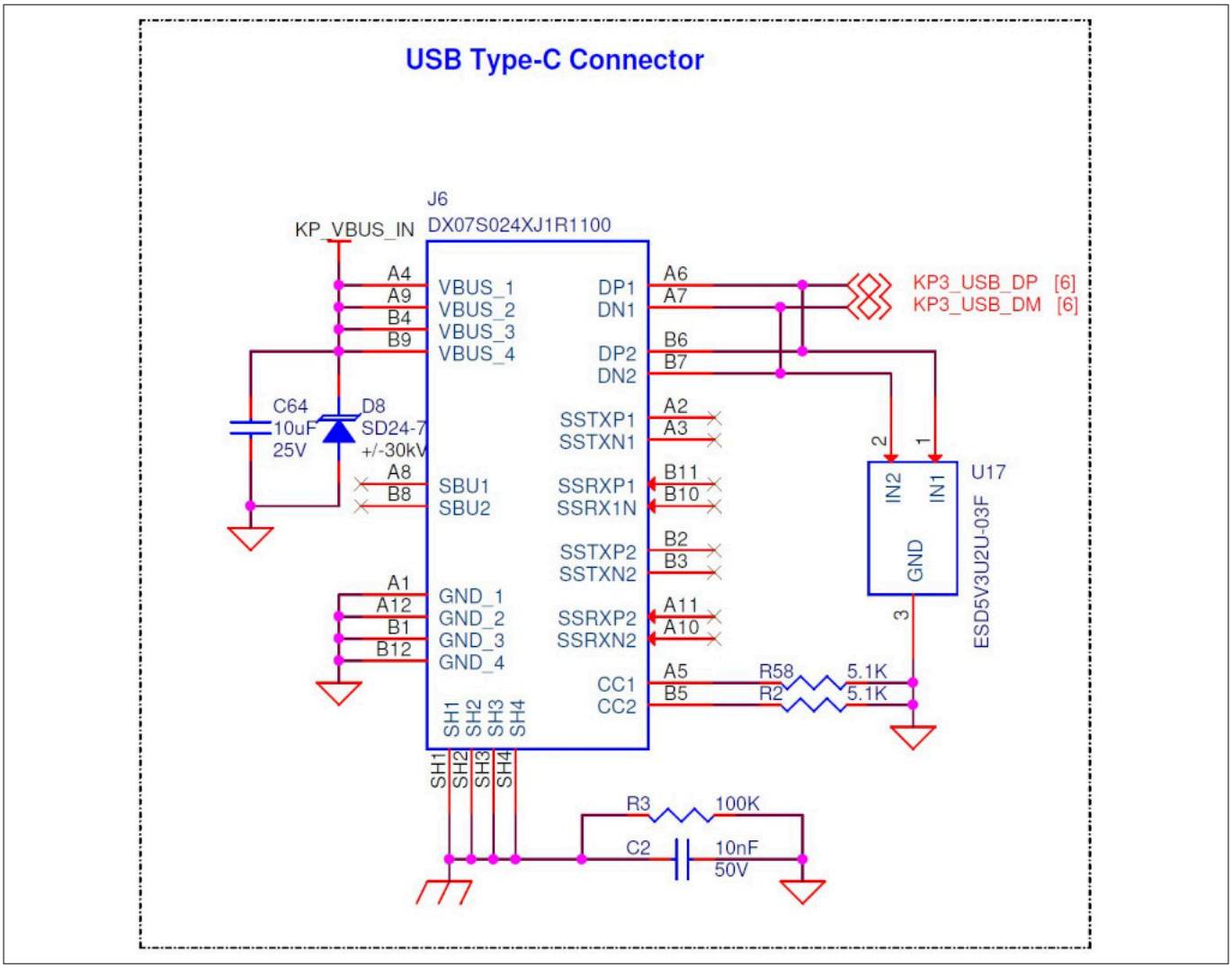

Figure 10 USB Type-C connector for power and KitProg3

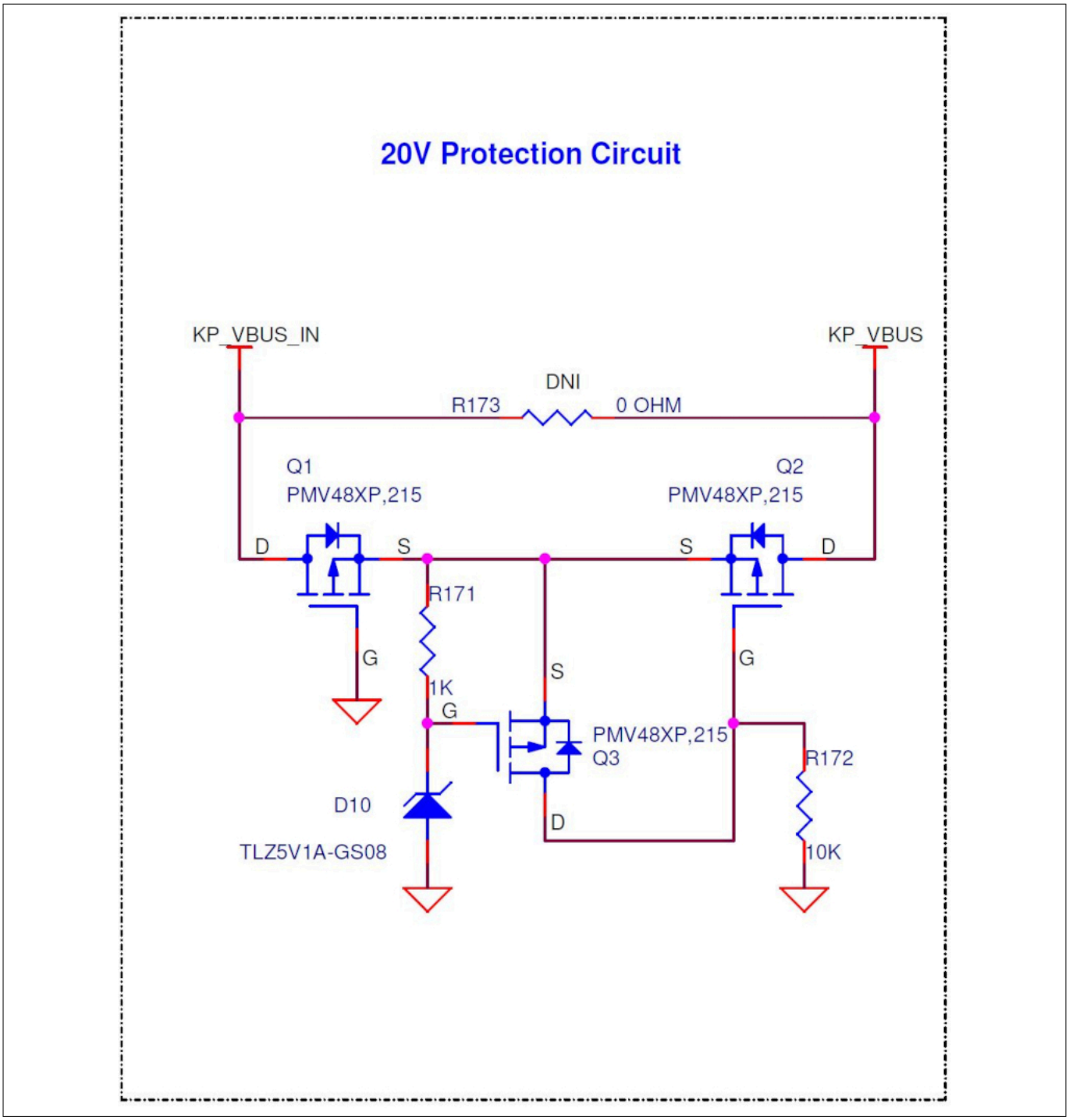

Figure 11 20 V protection circuit for USB

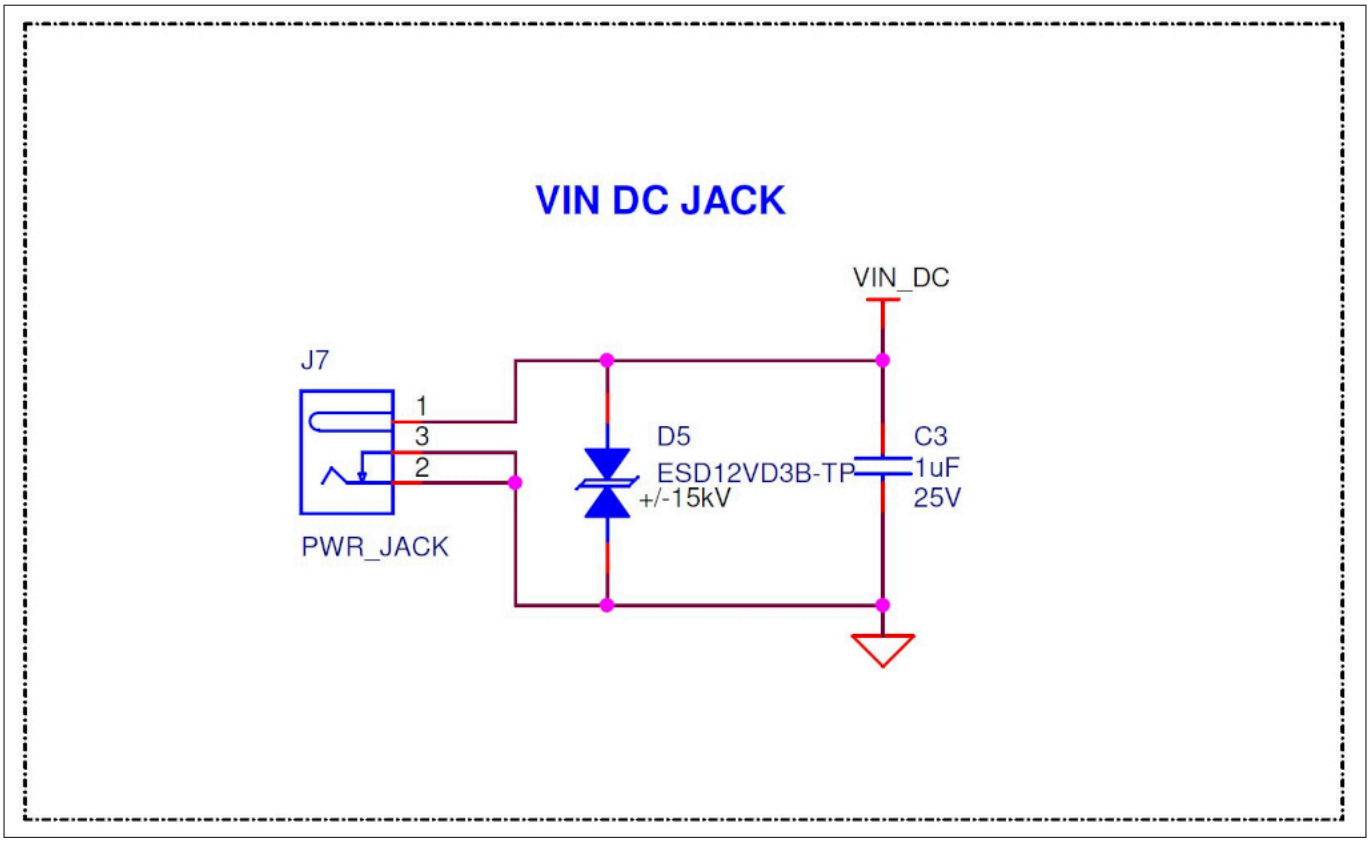

Figure 12 5 V - 12 V DC jack

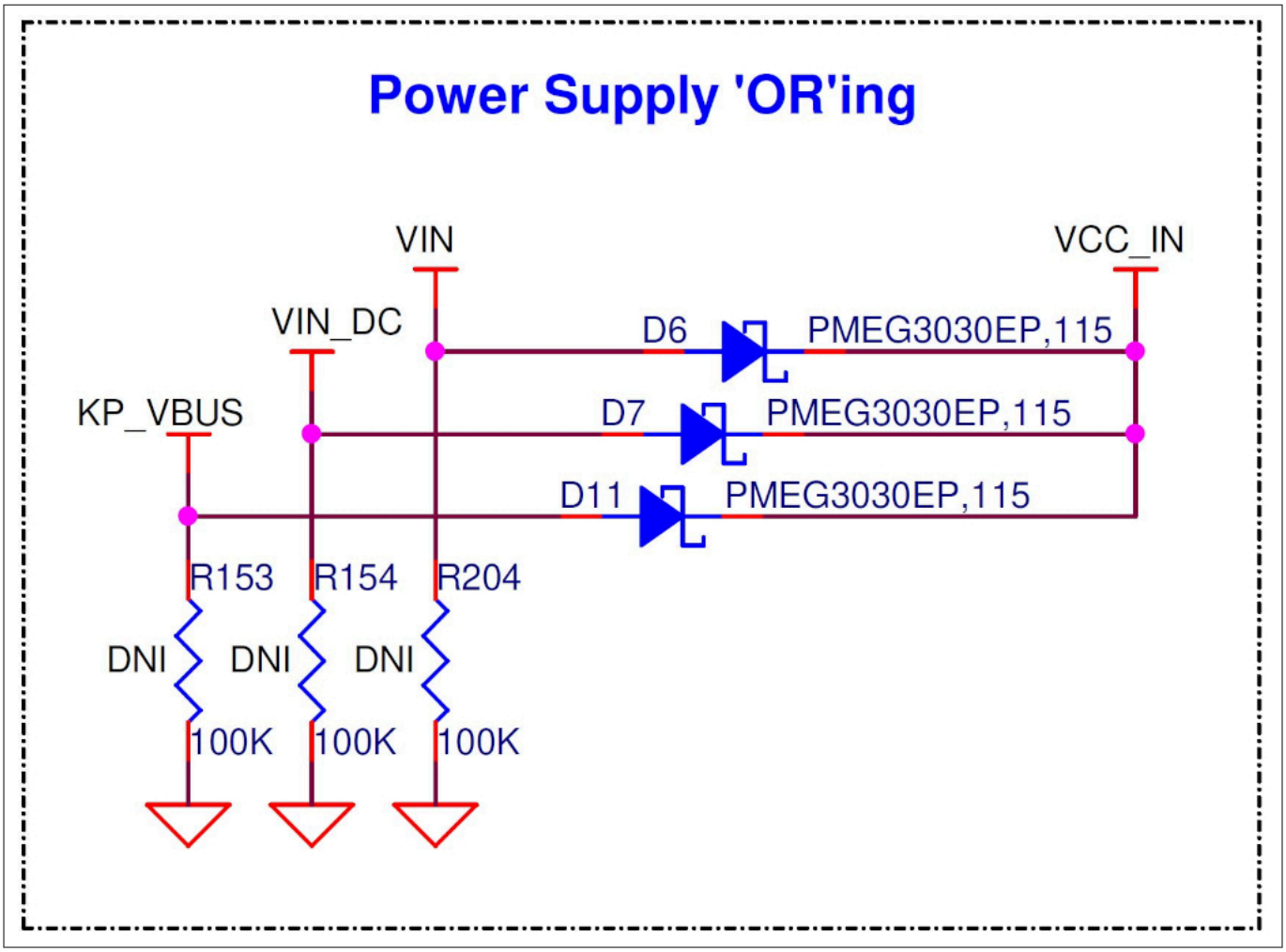

Figure 13 Power supply ORing circuit

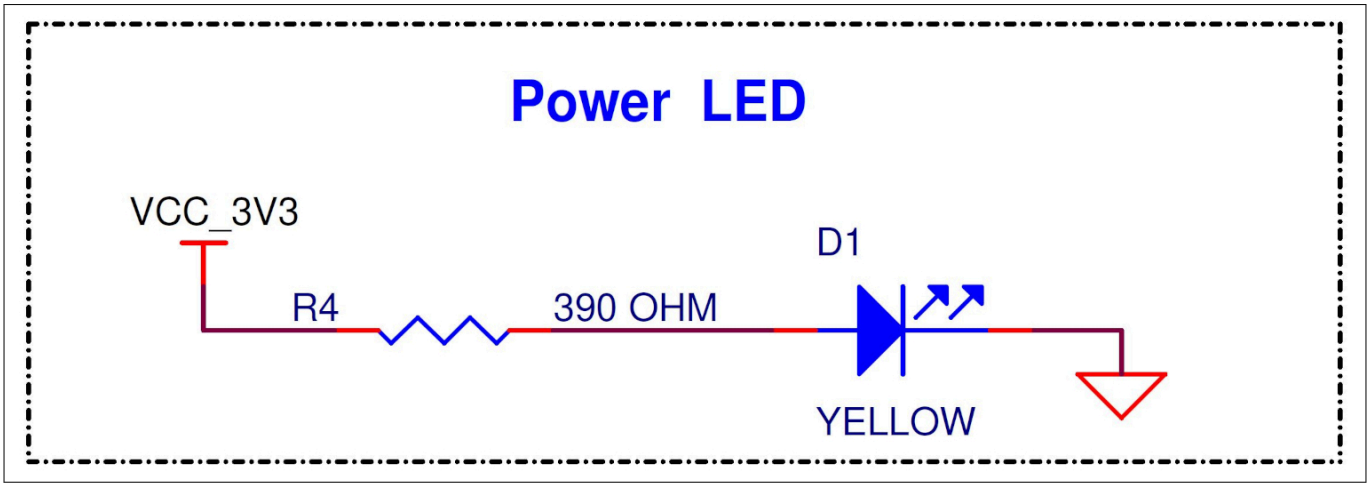

Figure 14 Power LED

3 Hardware

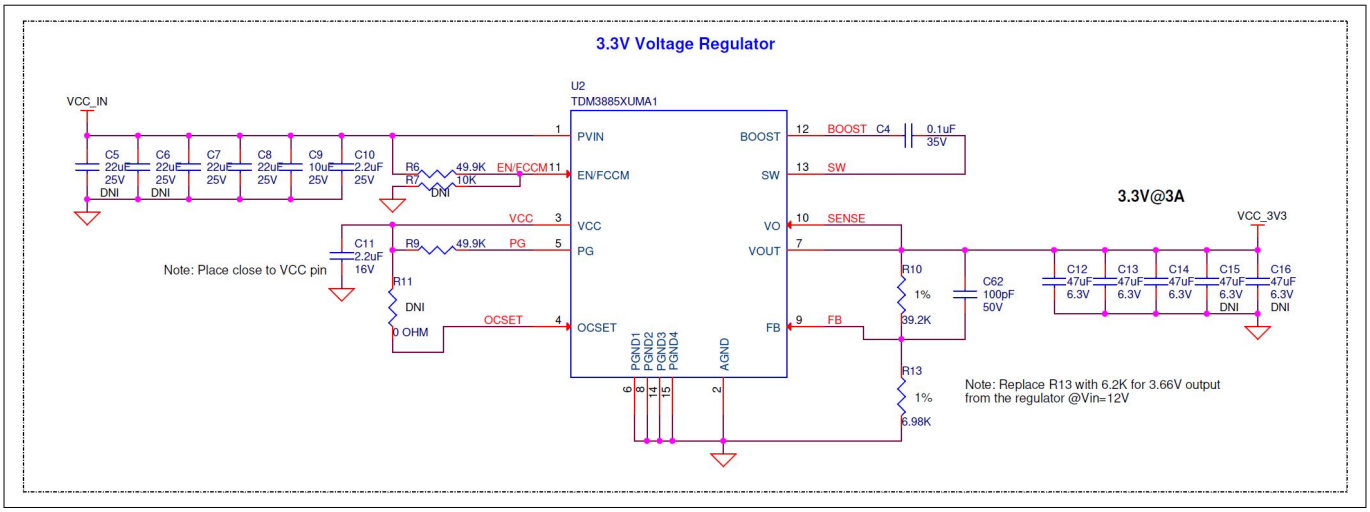

Figure 15 3.3 V Buck regulator

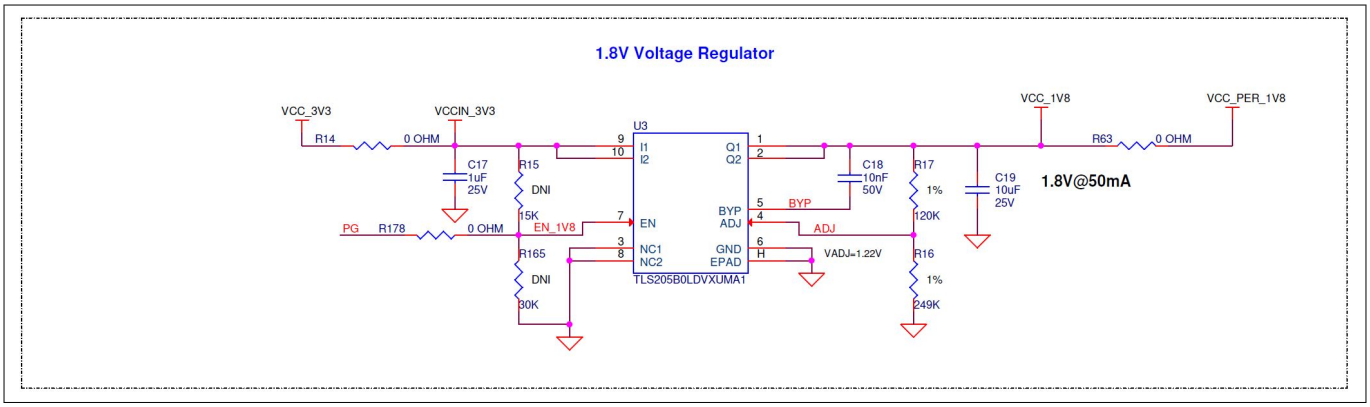

Figure 16 1.8 V LDO

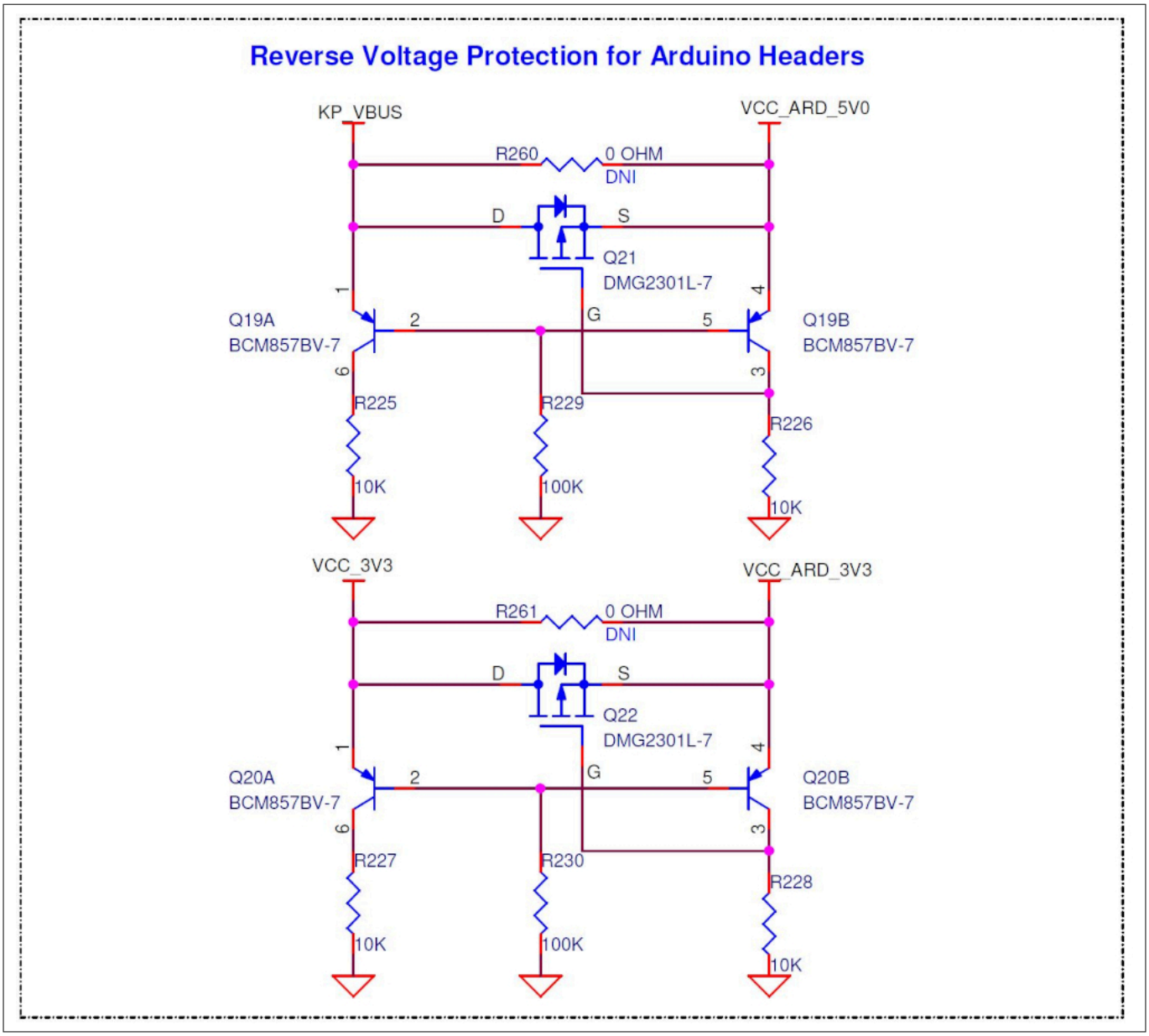

Figure 17 Reverse voltage protection circuit for Arduino headers

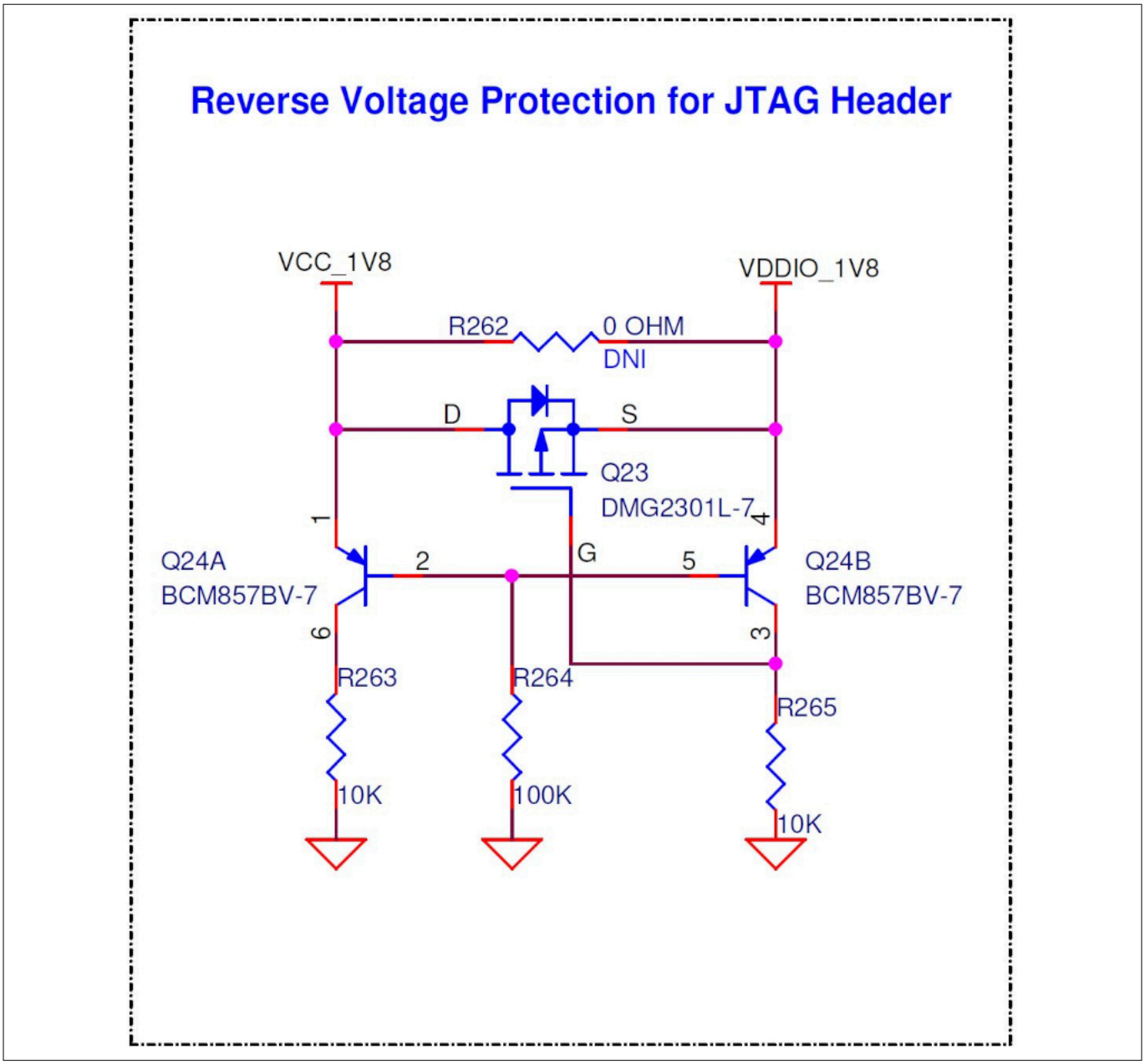

Figure 18 Reverse protection circuit for connector J9

3.2.3 Device recovery and reset

KIT-CYW55310-EVAL has one recovery button and a reset button. The recovery button (SW1) connects to the BT_UART_CTS_N pin on the CYW55310 device, and while pressing the button, this pin is connected to ground and push the device into recovery mode.

SW2 on the kit is the reset button, which is connected to the BT_REG_ON pin of the CYW55310 device, and once button is pressed, it connects this pin to ground, disables the BT subsystem power supply, and makes the system reset. The BT_REG_ON pin of the device is also connected to the J17 header, and by placing jumper on the same, the BT subsystem can be permanently disabled.

Also, J16 connected to the WL_REG_ON pin of the CYW55310, can be mounted with the jumper to connect the pin to ground to disable the WLAN subsystem.

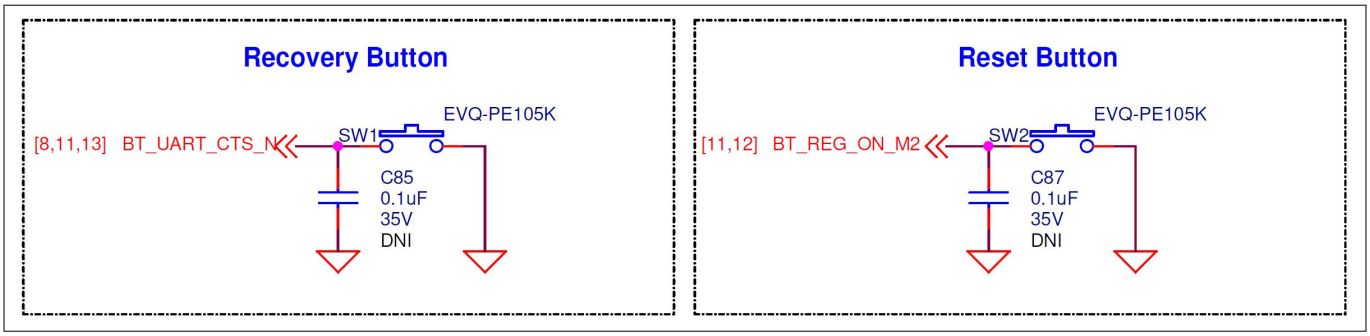

Figure 19 Reset and recovery buttons

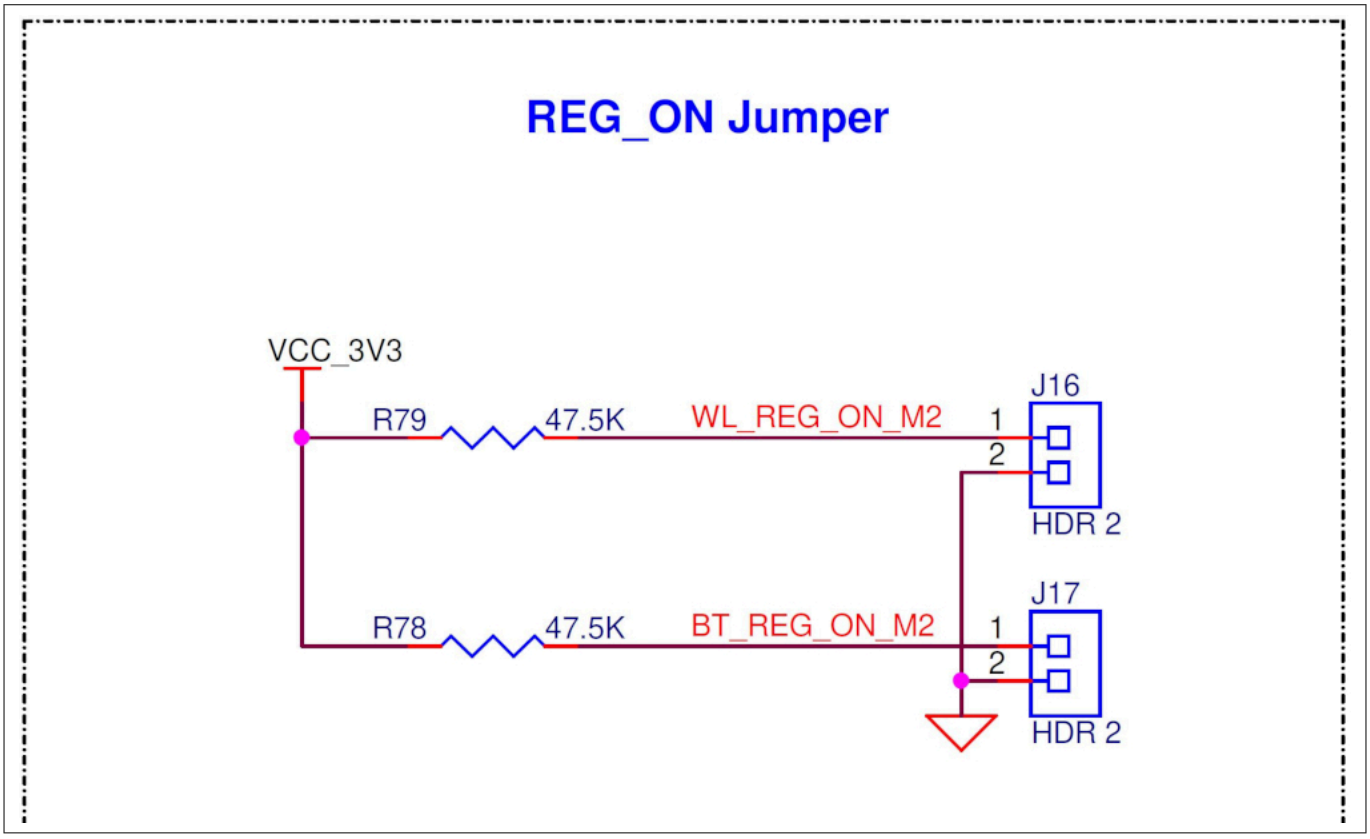

Figure 20 WL_REG_ON and BT_REG_ON jumpers

3.2.4 Digital (PDM) microphones

This kit has two digital mics that are connected to the CYW55310 device through the PDM interface and can be used for audio record functionalities in stereo mode. The select pin on each microphone is biased such that data is either on a HIGH or LOW of the clock signal. This digital mic is powered from the VCC_PER_1V8 power rail of the kit.

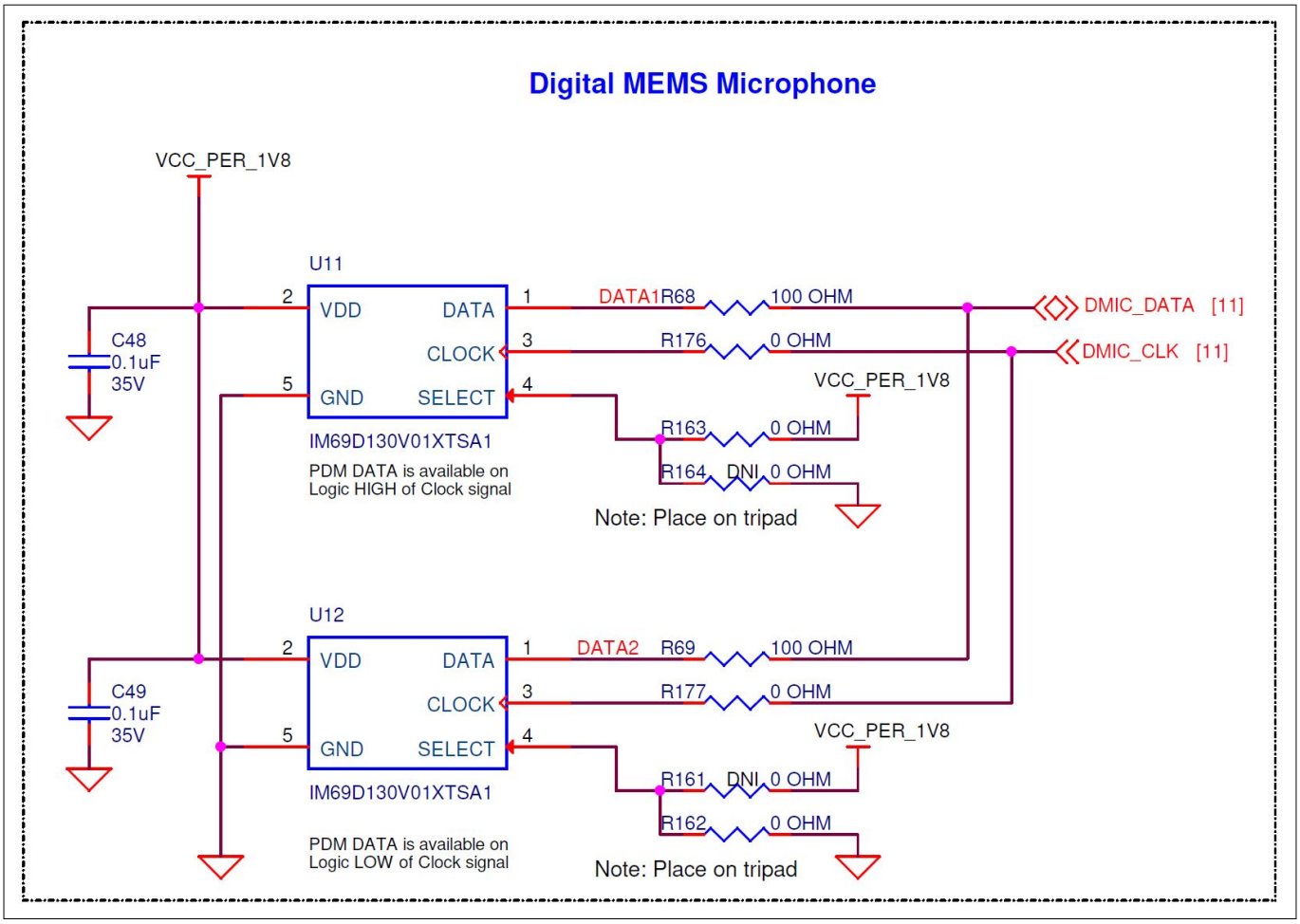

Figure 21 Digital microphone

3.2.5 Analog microphone

One analog microphone is also included in this kit to demonstrate the analog audio capability of the CYW55310 device. Differential output AMIC is interfaced with the CYW55310 device through the dedicated analog microphone input pin and AGND pin. This AMIC is powered by the VCC_PER_1V8 rail on the kit.

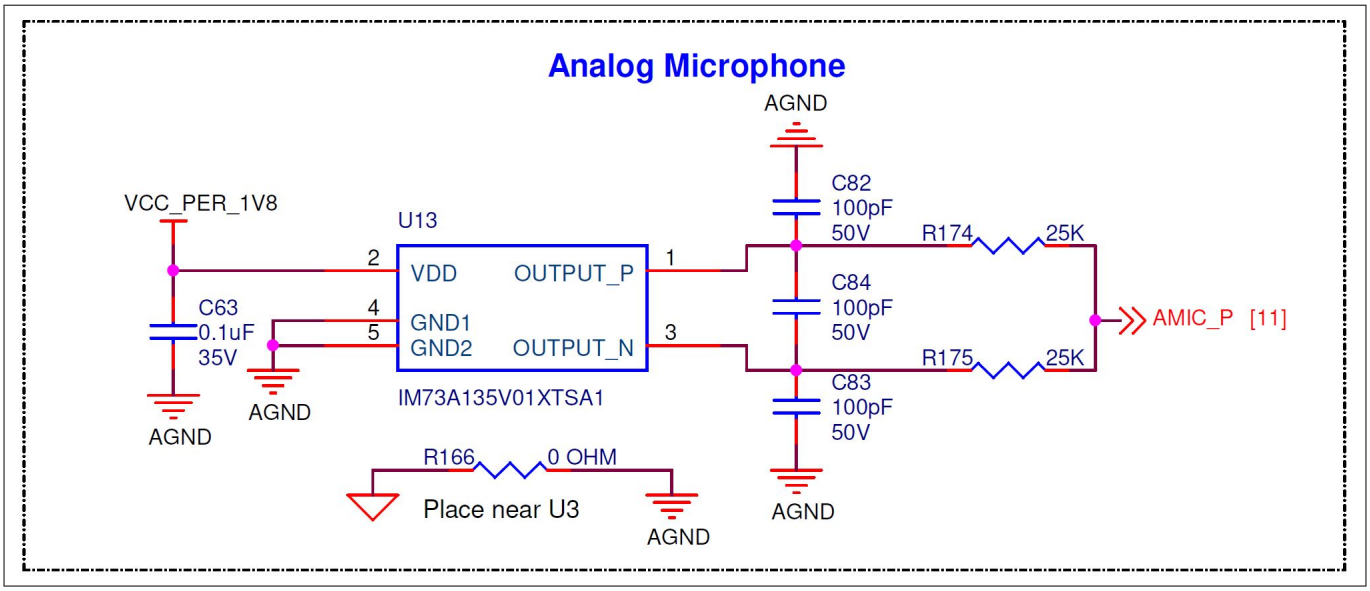

Figure 22 Analog microphone

3.2.6 Ambient light sensor

Kit is having a digital ambient light sensor on the baseboard, which is connected to the CYW55310 device via an I2C interface. The ambient light sensor is powered by the VCC_PER_1V8 power rail on the baseboard, sense the ambient light intensity, and provides data to the CYW55310 device via an I2C interface.

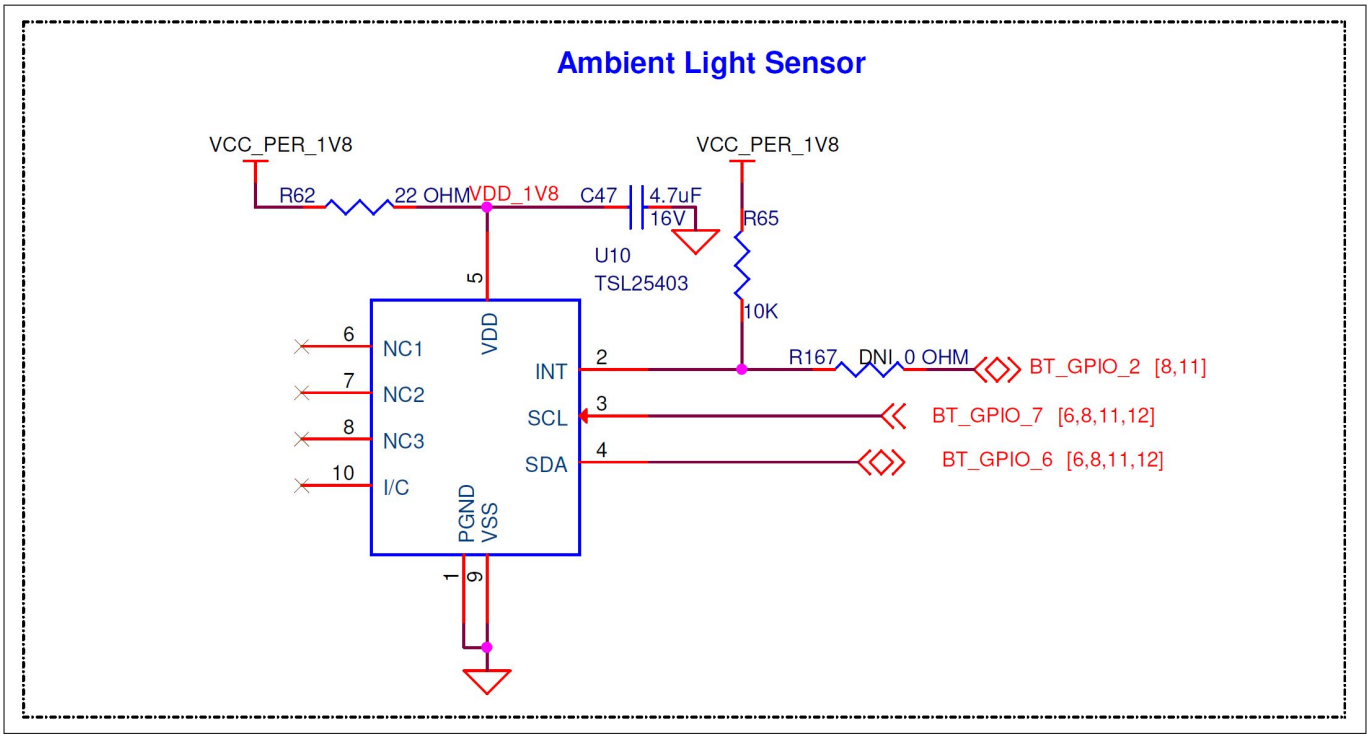

Figure 23 Ambient light sensor

3.2.7 User LEDs

There are two user LEDs on the baseboard that are connected to the GPIOs of the CYW55310 device. User LED1 is connected to the BT_GPIO_16, and user LED2 is connected to the BT_GPIO_17, and these connections to the LEDs can be isolated using the SW5 switch when the GPIOs are accessed on the Arduino connectors.

LEDs are connected to the device GPIOs, so the GPIOs need to be configured as low for glowing the LEDs.

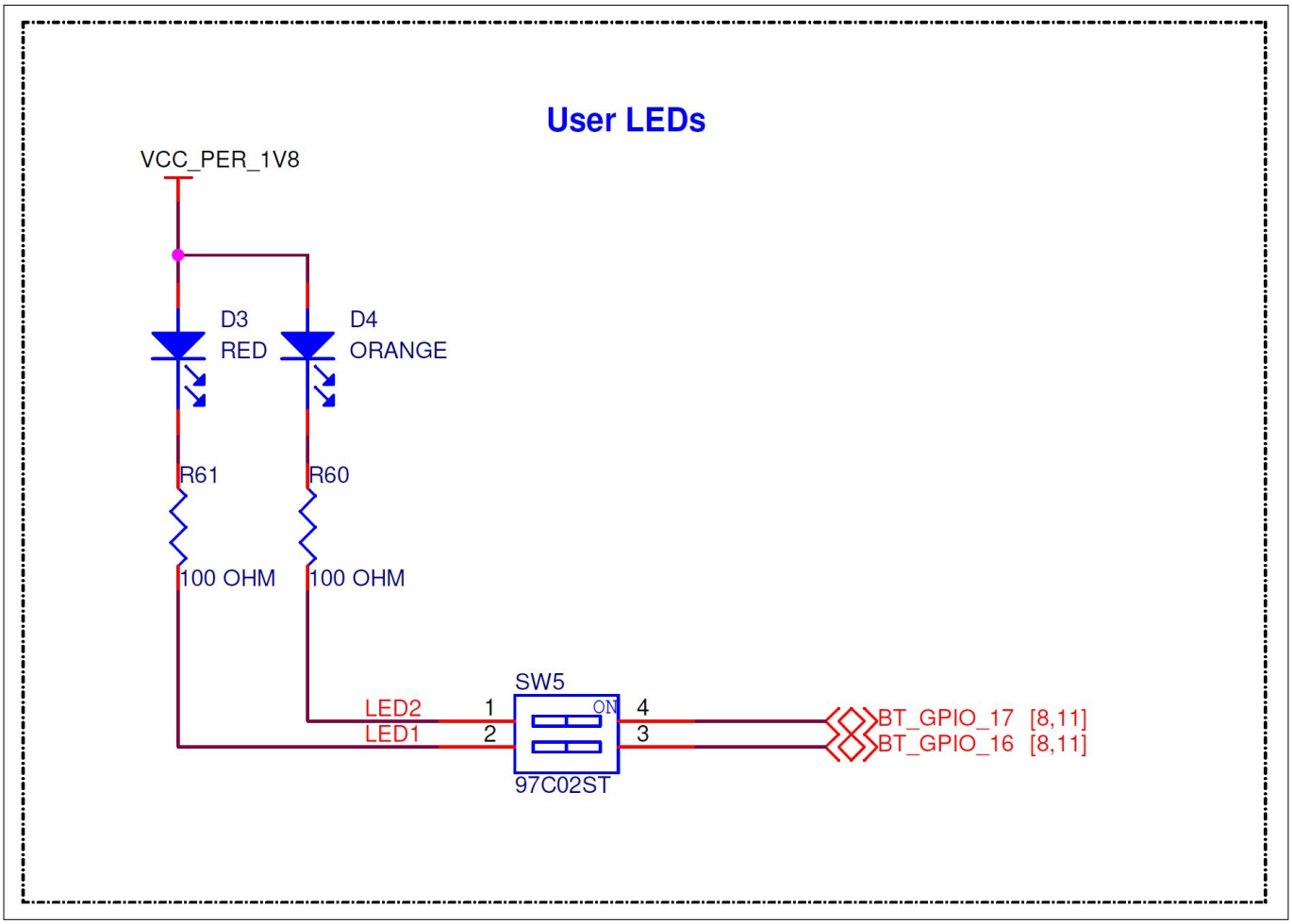

Figure 24 User LEDs and isolation switch

3.2.8 User button

One user-controlled button is available on the kit to provide user-specified inputs. This user button is connected to BT_GPIO_4 of the CYW55310 device as an active low input.

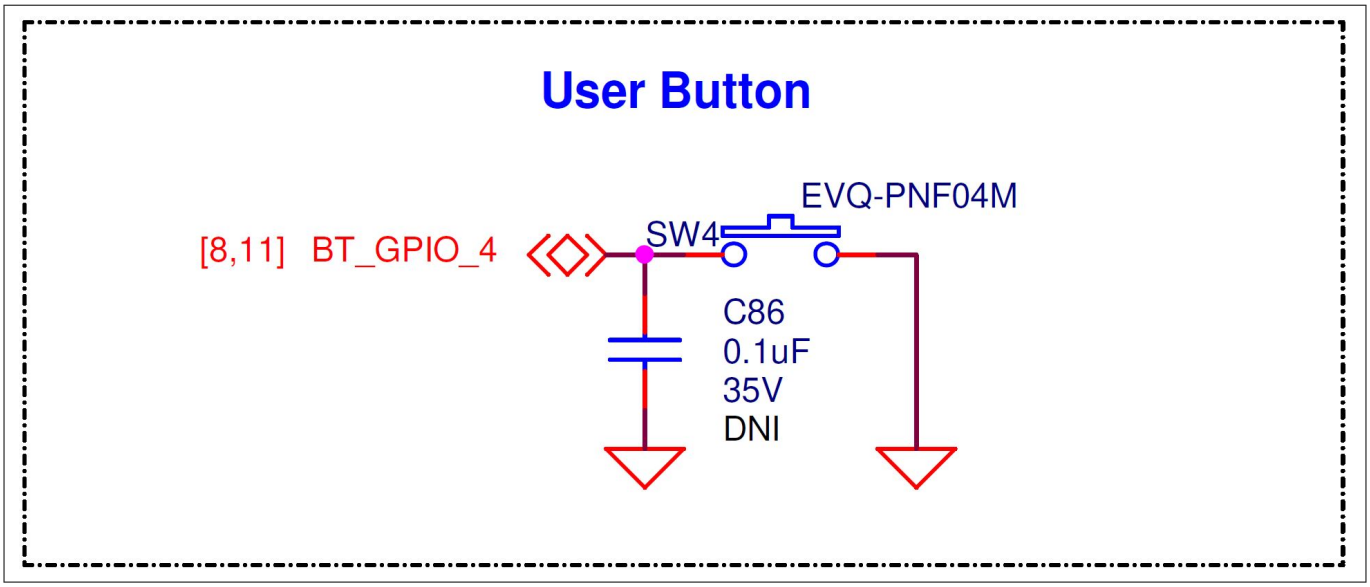

Figure 25 User button

3.2.9 Potentiometer

One Potentiometer is present on the kit and is connected to the ADC-capable pin (LHL_GPIO_8) of the CYW55310 device that enables the kit to demonstrate the analog capability of the device.

If this GPIO is used for other functionalities on the Arduino header, the potentiometer can be disconnected from the GPIO by removing the jumper from the J10 header.

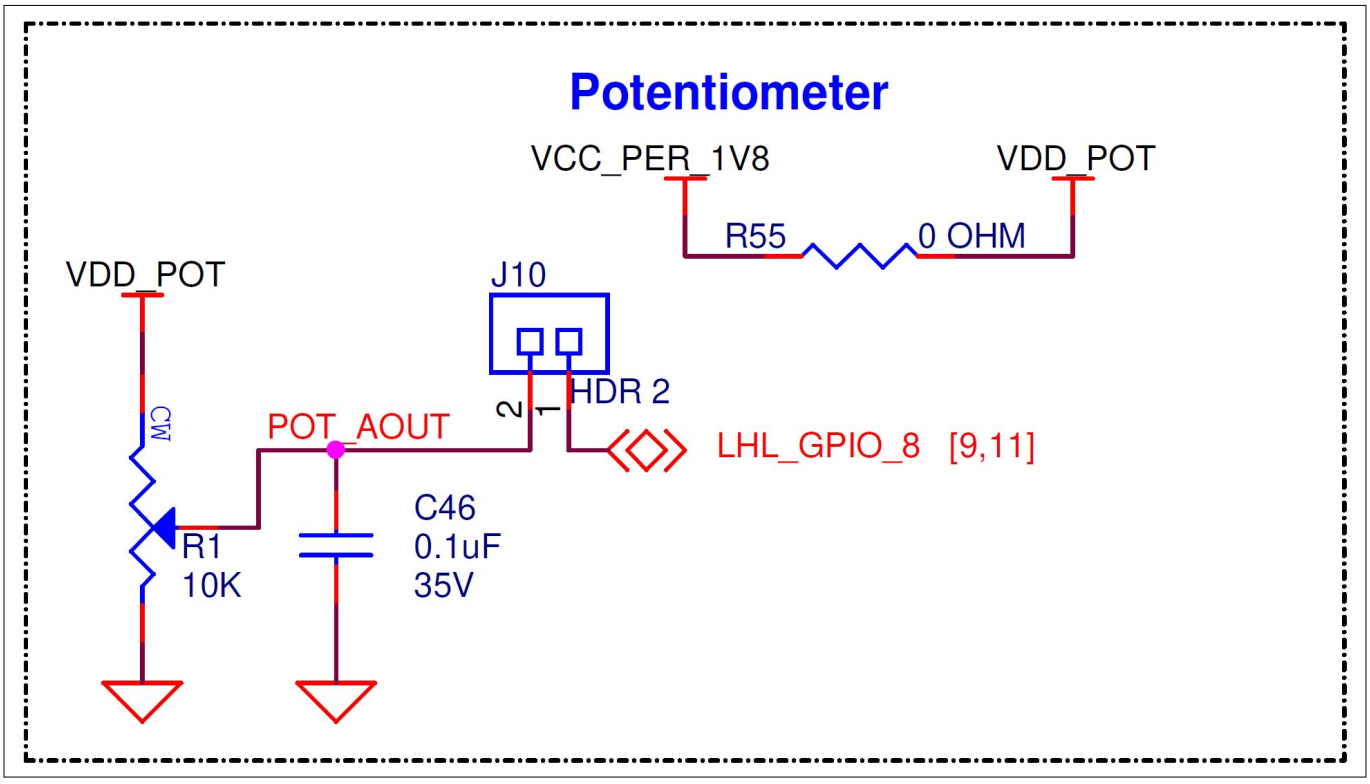

Figure 26 Potentiometer

3.2.10 Arduino compatible headers and extended headers

The baseboard supports generic Arduino-compatible Uno shields and selected Infineon custom-defined Arduino-compatible shields. All CYW55310 GPIO pins are moved out to Arduino-compatible headers. Some pins with fixed functions are also multiplexed through 0 Ω and connected to headers. The I/O headers J1-J4 whose position and pin map comply with the Arduino-compatible UNO R3 kit to support Arduino-compatible shields.

The system power signals are moved to the pins of J1. The power supply pins for Arduino-compatible VCC_ARD_3V3 and VCC_ARD_5V0 connect to VCC_3V3 and KP_VBUS through reverse voltage protection circuits. All GPIOs of the CYW55310 device are at 1.8 V, and level translators are used to level shift them to 3.3 V, 5 V to support those voltage levels, and VIOREF voltage can be selected with the jumper position in the J20 header.

Extended headers are also available on the kit and mapped to the TDM interfaces from the CYW55310 device to support the BT audio functionality.

The SW6 slide switch is used to switch the functionalities of the multiplexed GPIOs LHL_GPIO_8 and LHL_GPIO_9.

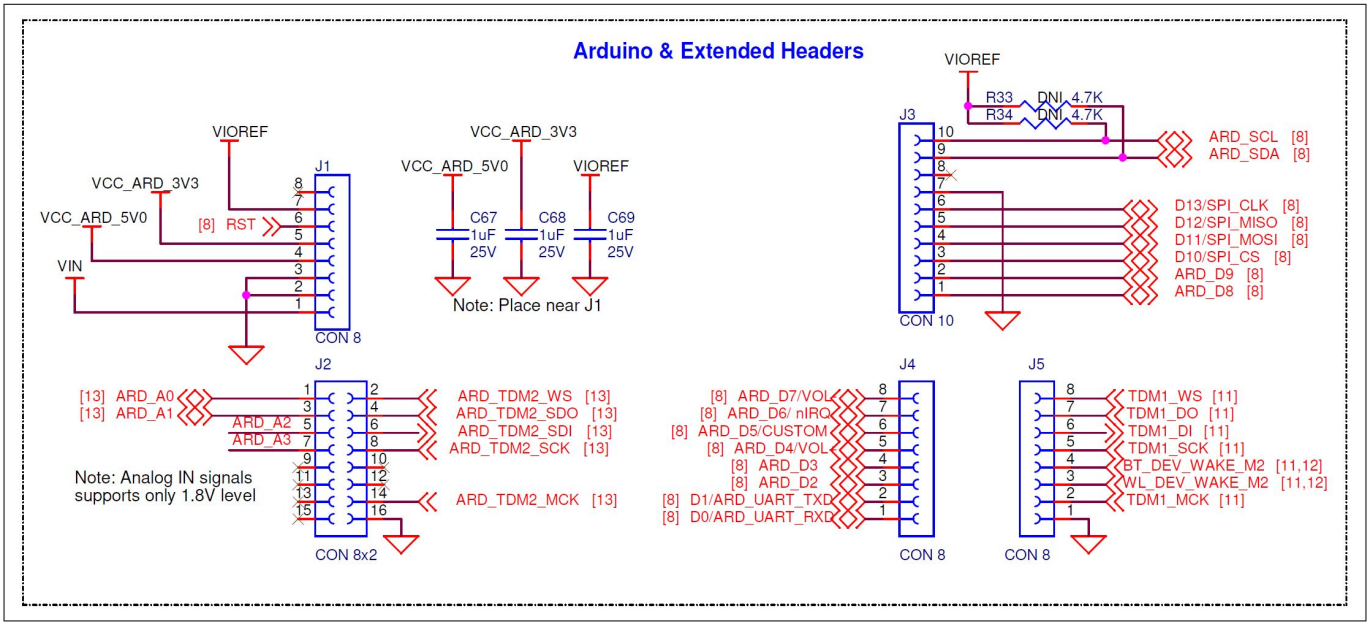

Figure 27 Arduino and extended headers

CYW55310 device have three Serial Communication Blocks (SCBs) supports three serial communication protocols: SPI, UART, and I2C. Only one of the protocols is supported by an SCB at any given time.

In KIT-CYW55310-EVAL, SPI interface to the Arduino header J3 and the Peripheral UART available on the USB connector(J6) uses the same SCB block (SCB1). So only one of them can be accessed at any given time.

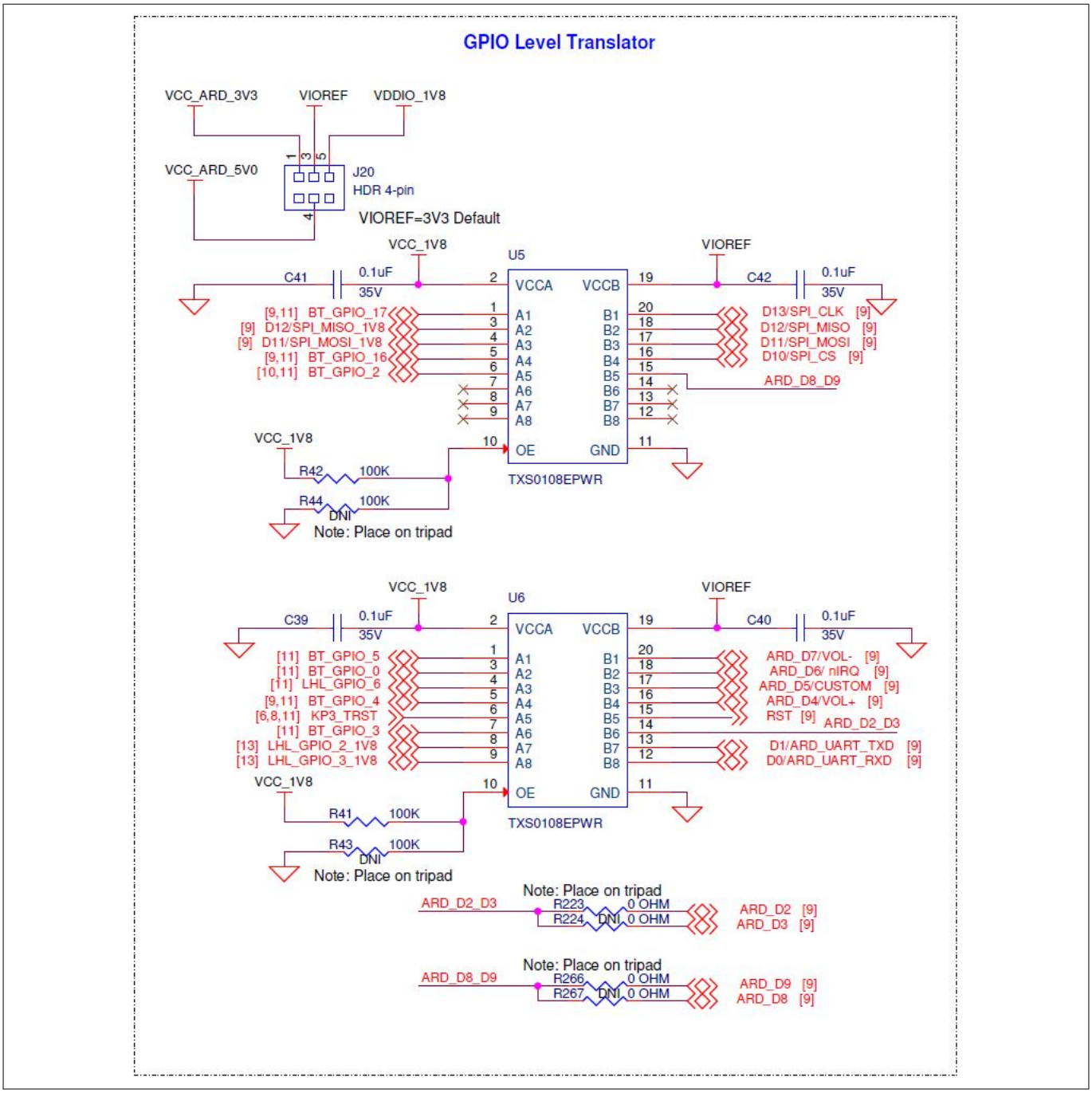

Figure 28 GPIO level translators for Arduino headers

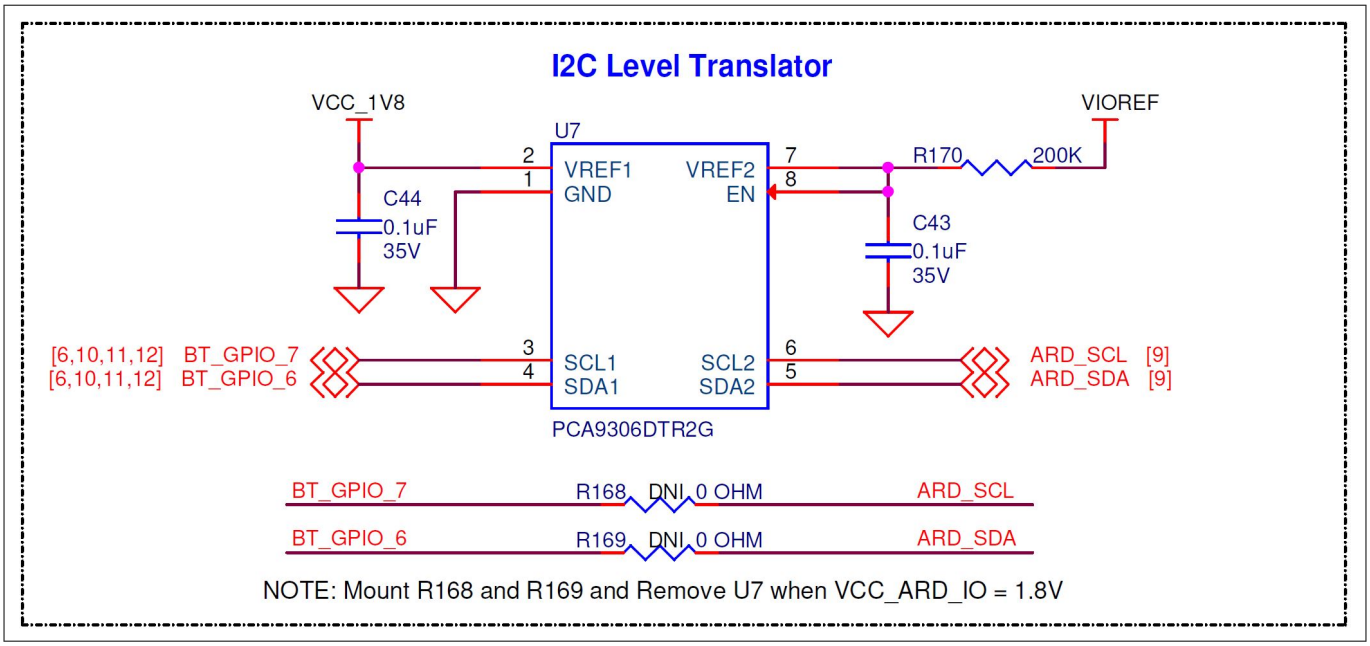

Figure 29 I2C level translator

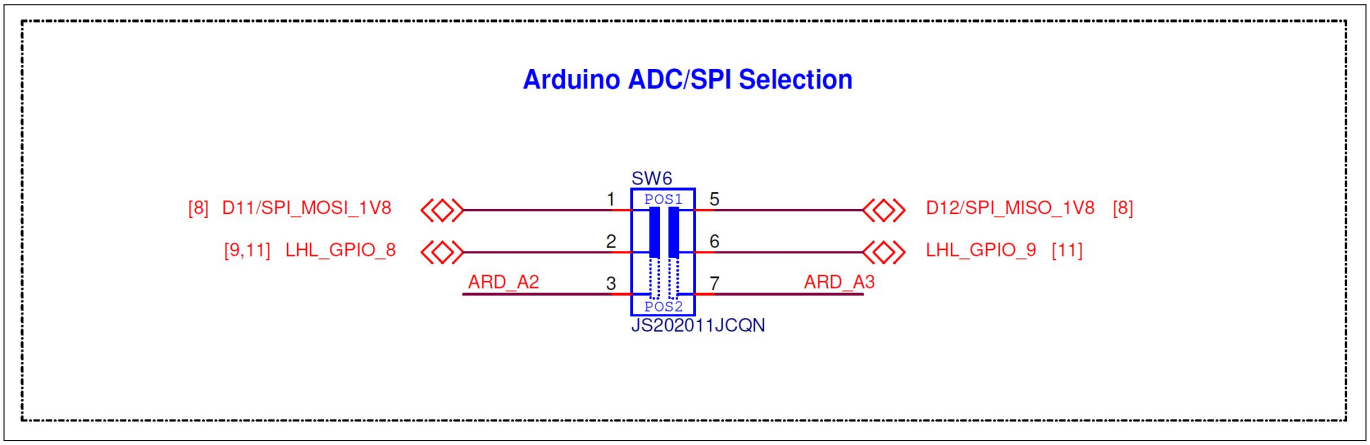

Figure 30 Multiplex switch for LHL_GPIO

3.2.11 M.2 connector for CYW55310 carrier module

The M.2 E-Key standard connector (J13) is used to interface the CYW55310 M.2 carrier module to the baseboard. This connector brings out all major interfaces like HCI UART, SDIO, TDM, and GPIOs from the device.

One external LPO option is provided on the baseboard, which is connected to the pin-50 of M.2 connector to provide 32.768 kHz clock to the M.2 carrier module.

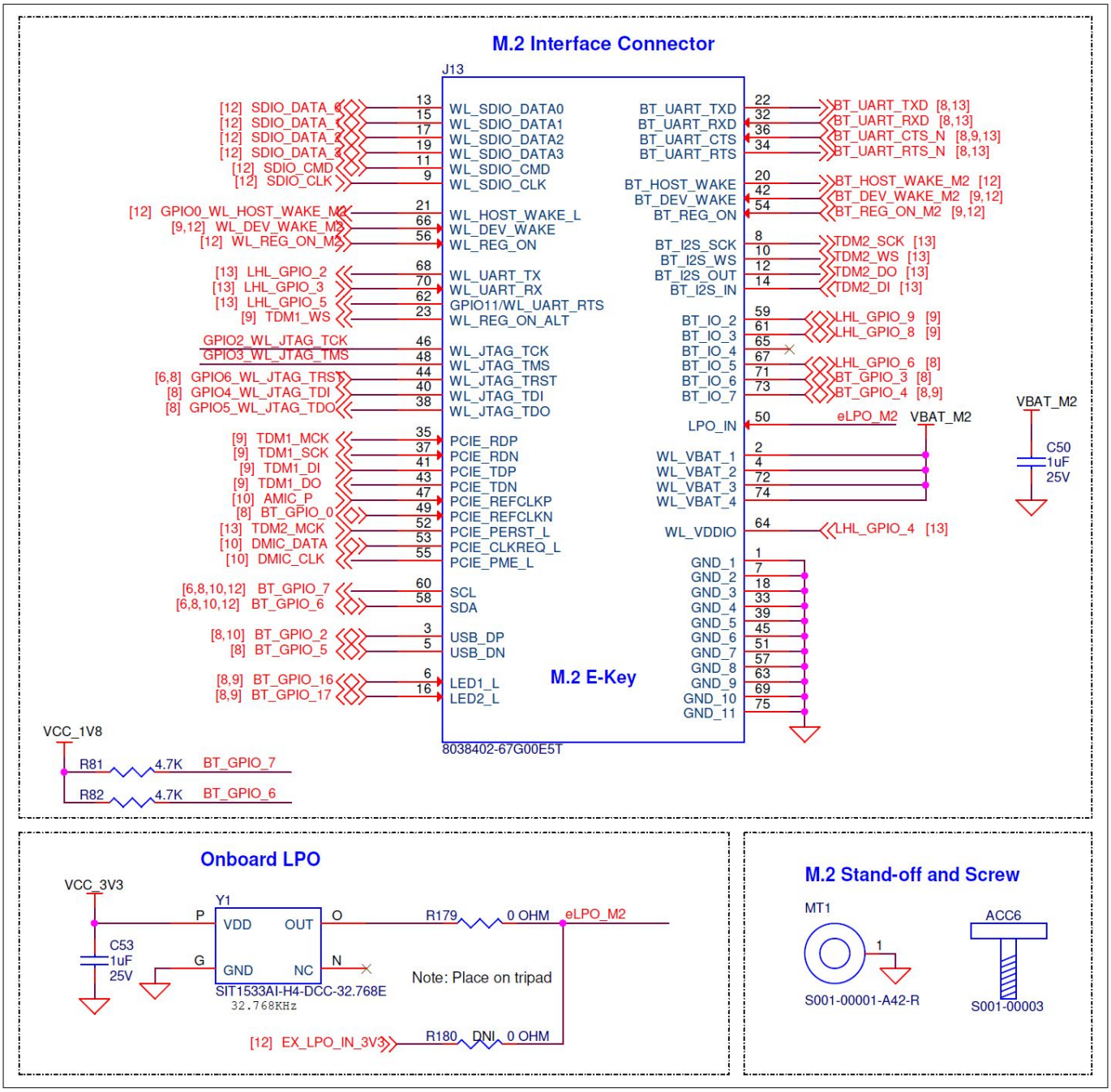

Figure 31 M.2 E-Key connector

3.2.12 JTAG connector

Connector J9 on the baseboard maps the WL GPIOs from the CYW55310 device, which functions as the JTAG/ COEX pins from the device. By default, this connector path is not mounted. See the Kit reworks chapter for the rework required to enable this path.

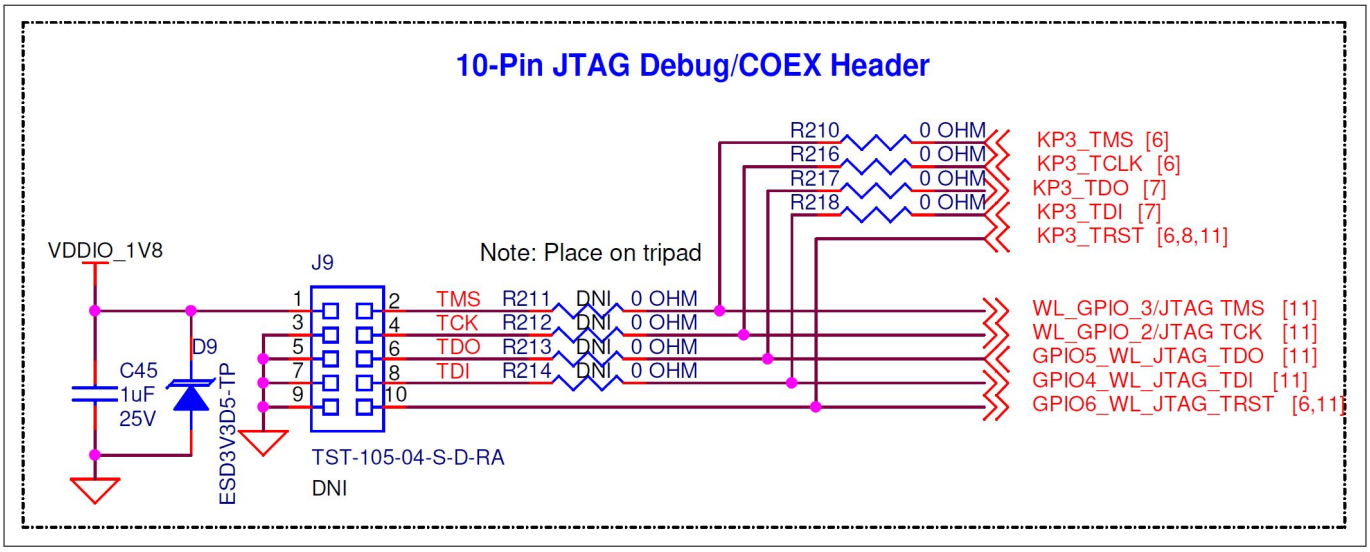

Figure 32 JTAG connector

3.2.13 UART connector

To enable UART programming from an external source, the baseboard has one 6-pin header (J22), which is not mount by default. It maps the HCI UART pins from the CYW55310 device with level translated to 3.3 V.

For details of the rework required to enable this path, see the Kit reworks chapter.

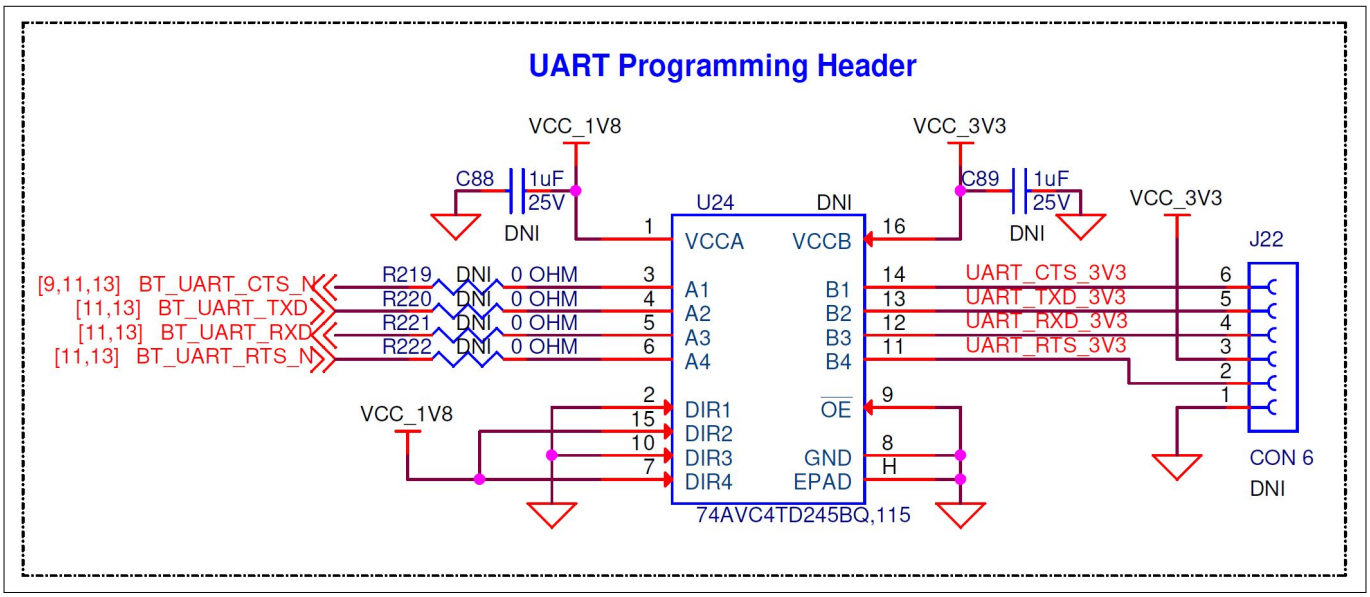

Figure 33 UART programming header

3.3 Audio shield board

The audio codec shield board CYW9BTAUDIO5 is a component of the KIT-CYW55310-EVAL evaluation kit, designed to be compatible with the Arduino headers J1-J5 on the Baseboard. This feature enables the user to execute a variety of audio code examples with the CYW55310 device.

The audio shield board features the CS47L35 audio codec as its central component, facilitating communication with the CYW55310 device through 2xTDM interfaces. Equipped with a CTIA headset connector, on-board Analog Mic, and speaker output header, this board enables users to engage in various audio use cases.

3.3.1 Audio codec CS47L35

The CS47L35 is a highly integrated audio codec from Cirrus Logic that combines an advanced DSP feature set to enable a superior voice and audio experience for this kit. It communicates with the CYW55310 device through 2xTDM interfaces and provides the customer with a variety of audio code examples with a CTIA standard headphone jack, stereo analog mic, and speaker output header as user interfaces.

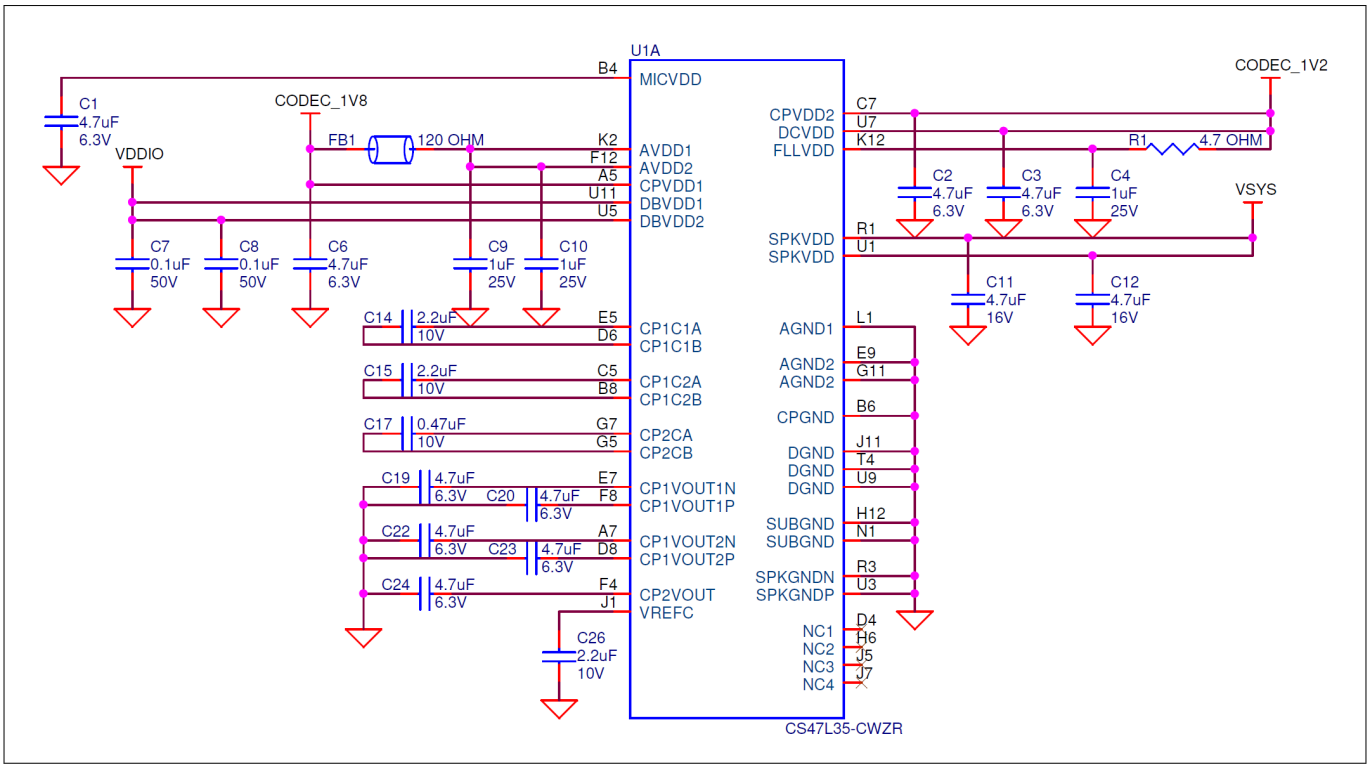

Figure 34 Audio codec power

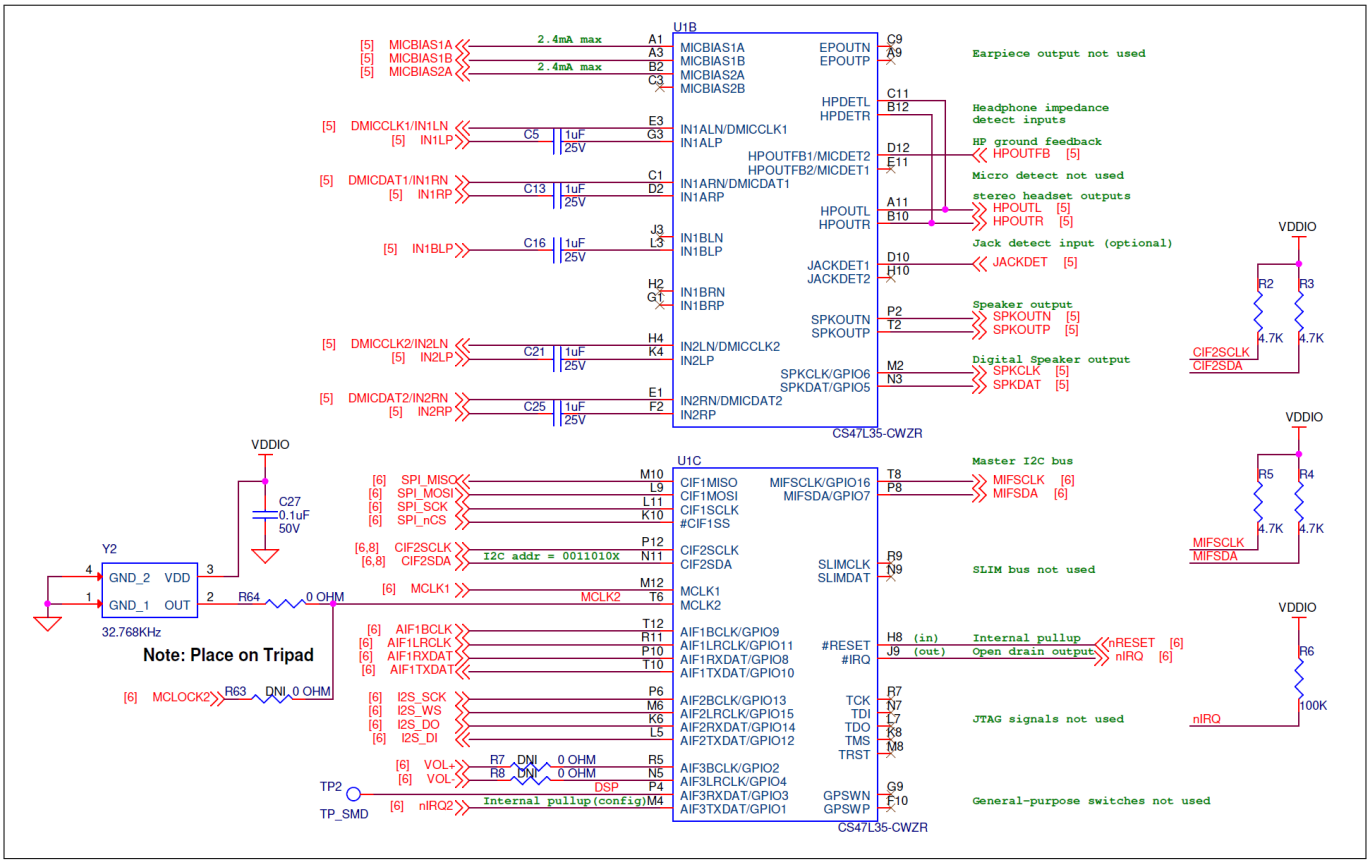

Figure 35 Audio codec interfaces

3.3.2 CITA headset connector

The headset connector (J10) allows the user to connect 3 or 4-pole headsets to the audio shield for the user audio interface. Furthermore, header J19 can be used to select between the 3-pole and 4-pole headset support.

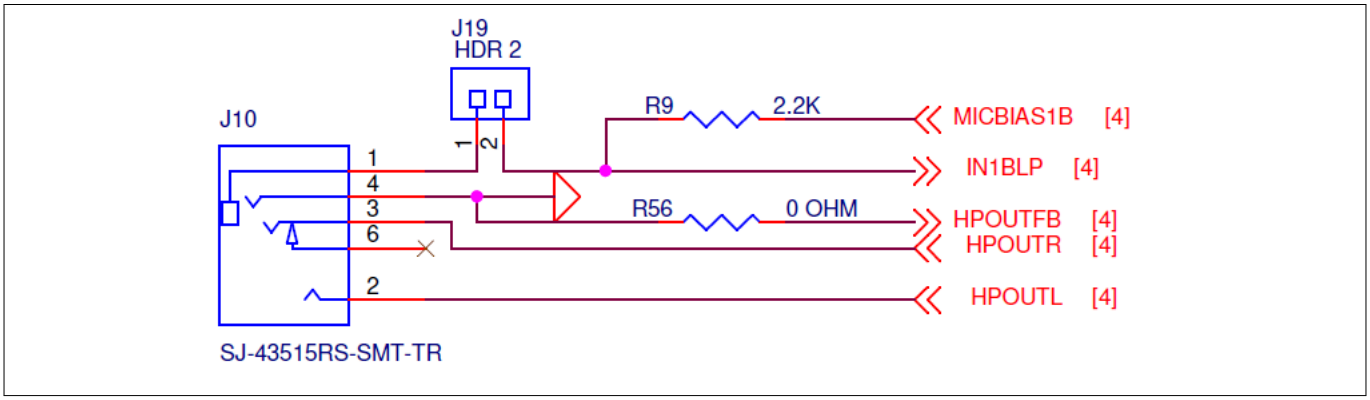

Figure 36 CITA Headset connector

3.3.3 Analog microphones

The audio shield includes two analog microphones (U11 and U12) which interface with the codec to enable the user to input stereo audio to the kit.

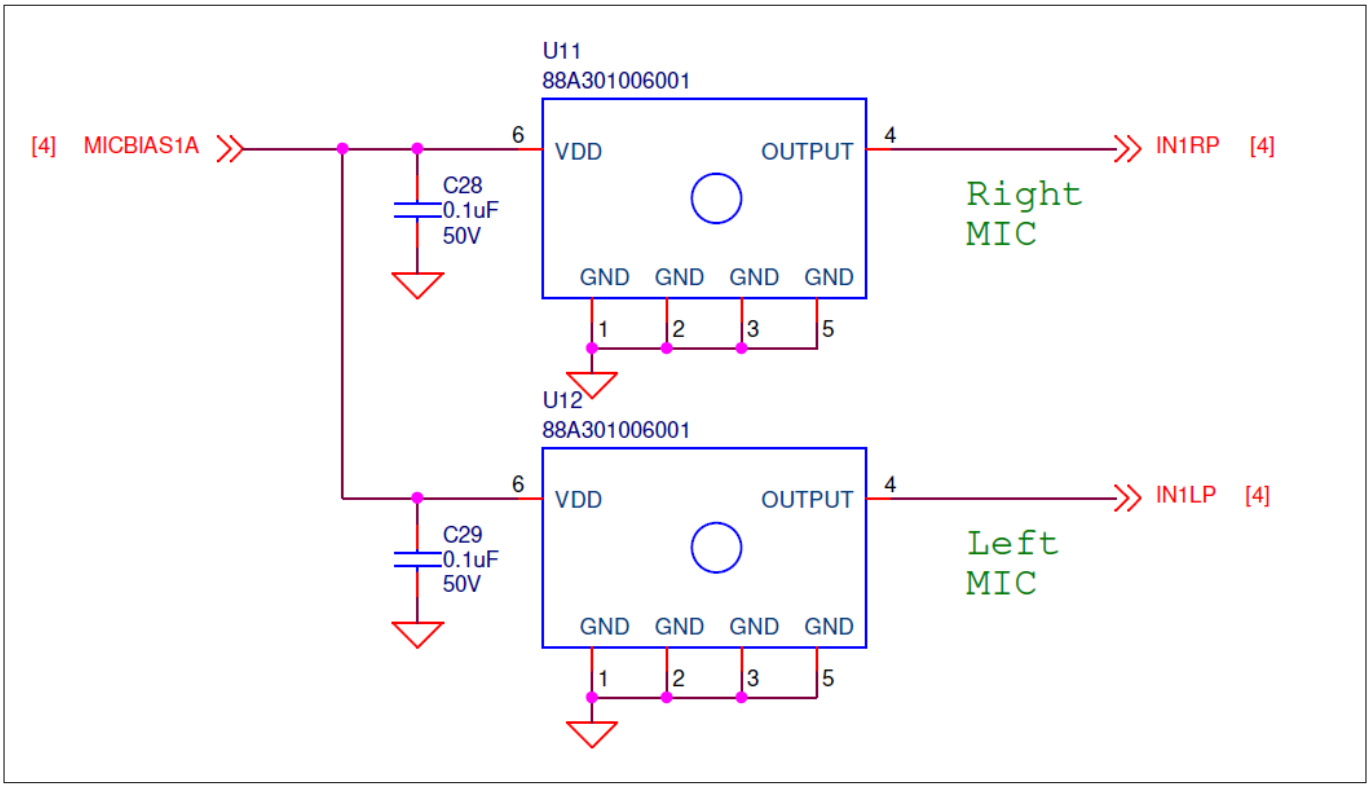

Figure 37 Analog microphones

3.3.4 Speaker output connector

The audio shield features a two-pin speaker out connector (J7). This connector allows for the attachment of an 8-ohm, 3W speaker to provide audio output from the kit.

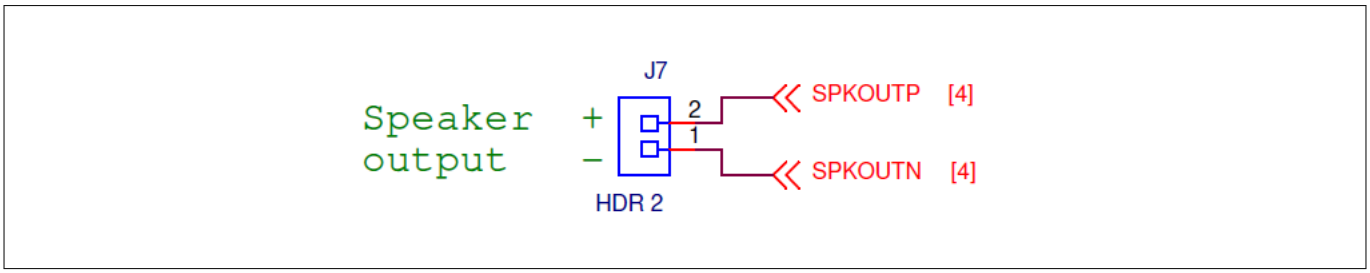

Figure 38 Speaker output connector

3.3.5 Shield headers

The audio shield is equipped with five Arduino-compatible headers that interface with the baseboard. These male headers support the 2xTDM interfaces for Bluetooth® audio, the SPI interface for codec configuration, and various GPIOs from the CTW955513 device to the audio shield.

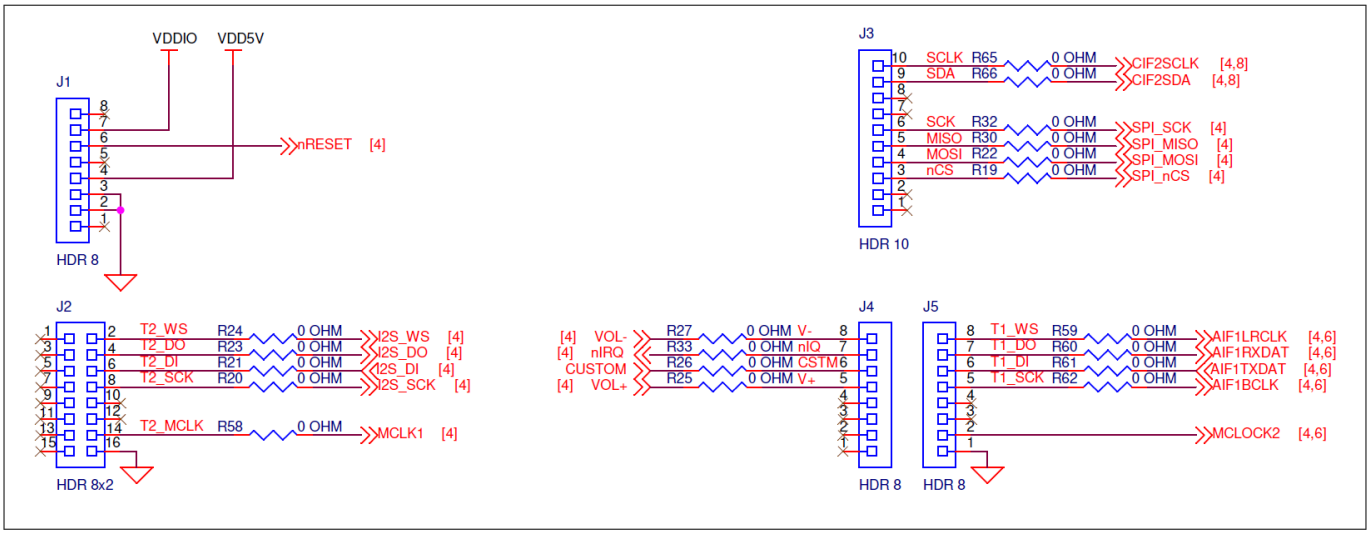

Figure 39 Shield headers

3.3.6 User buttons

The audio shield features three user-controlled buttons for user-specified inputs. These buttons are connected to BT_GPIO_4, BT_GPIO_5, and LHL_GPIO6 of the CYW55310 device as active low inputs.

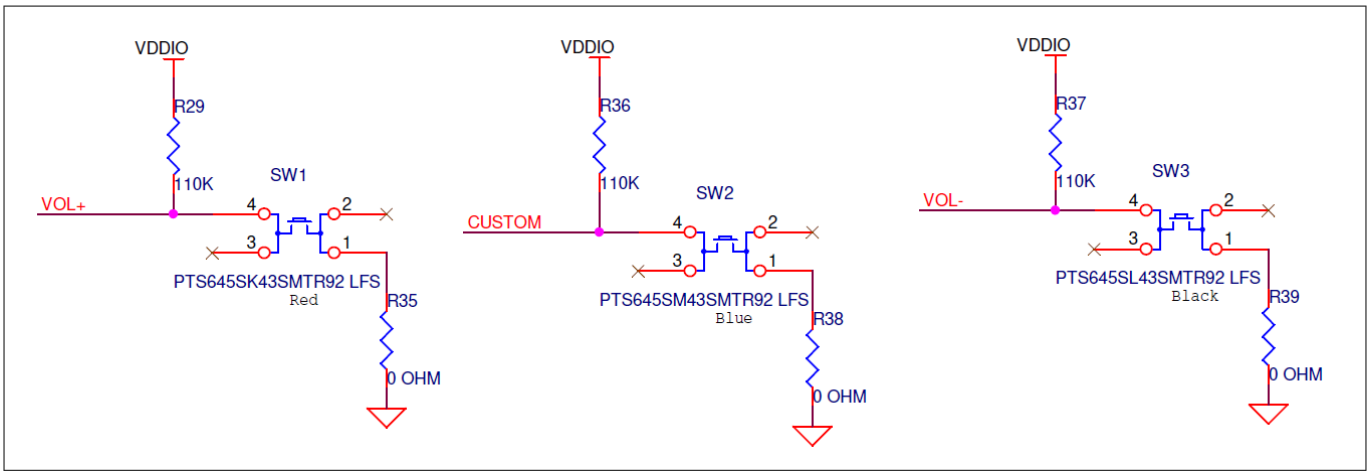

Figure 40 User buttons

3.3.7 Audio shield power

- Power supply options and selection
  - The audio shield's default power supply source is the 5 V supply from the baseboard via the J1 connector. Additionally, it offers two optional power supply options: the 5 V DC Jack (J7) and the micro-USB connector (J18). The selection of the input source can be configured using the jumper settings on the J17 header.
- Voltage regulation and current measurement
  - From the 5 V input, the shield generates 1.8 V and 1.2 V using LDOs to power the Codec component. The power section of the shield also incorporates current measurement jumpers for the 5 V, 1.8 V, and 1.2 V rails.

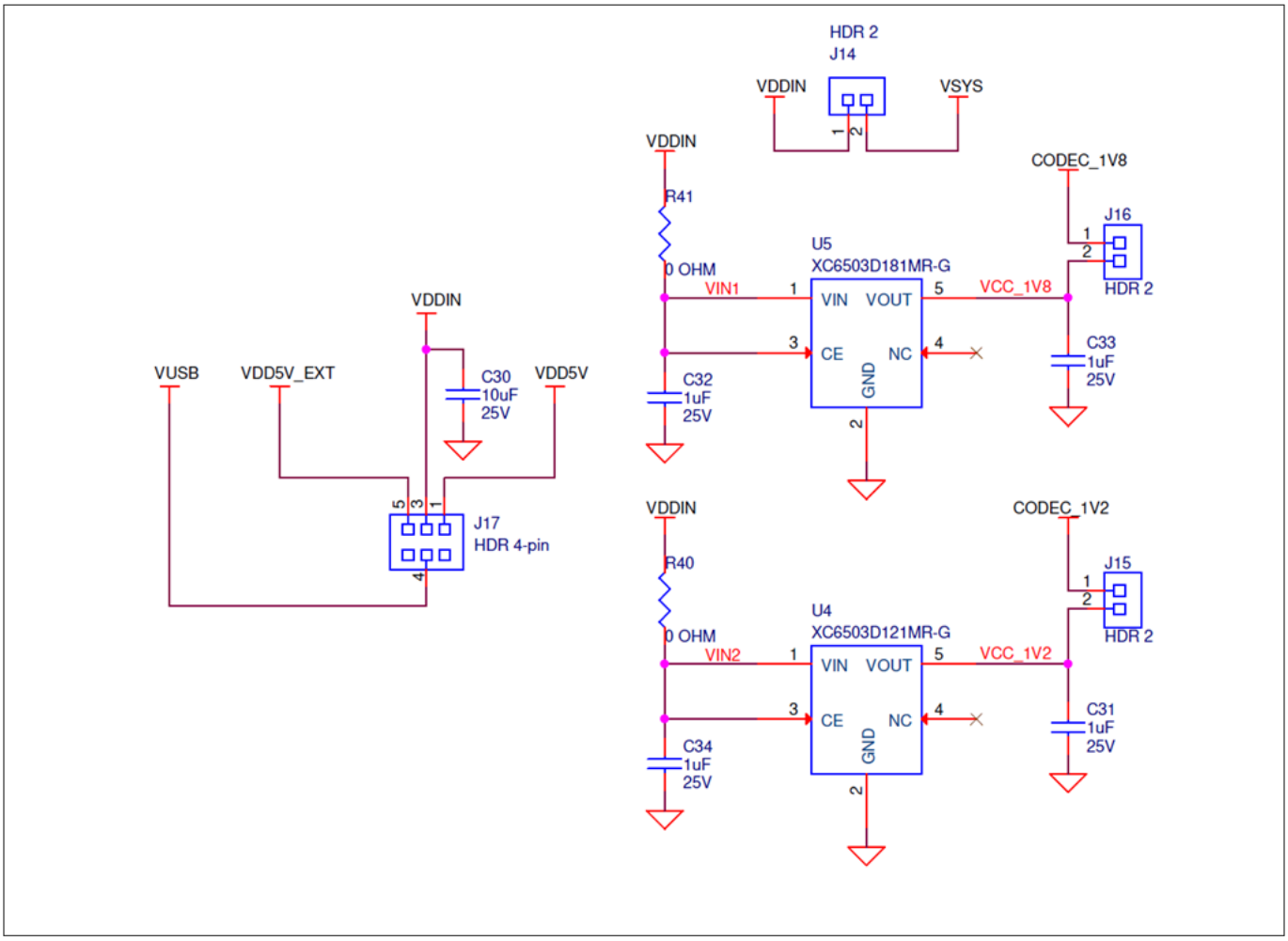

Figure 41 Audio shield power

3.3.8 USB serial bridge

The audio shield features an FT2232 device serving as a USB serial interface to the codec, accessible via the J18 micro-USB connector. This facilitates user access to and configuration of the register settings on the codec for custom applications.

3 Hardware

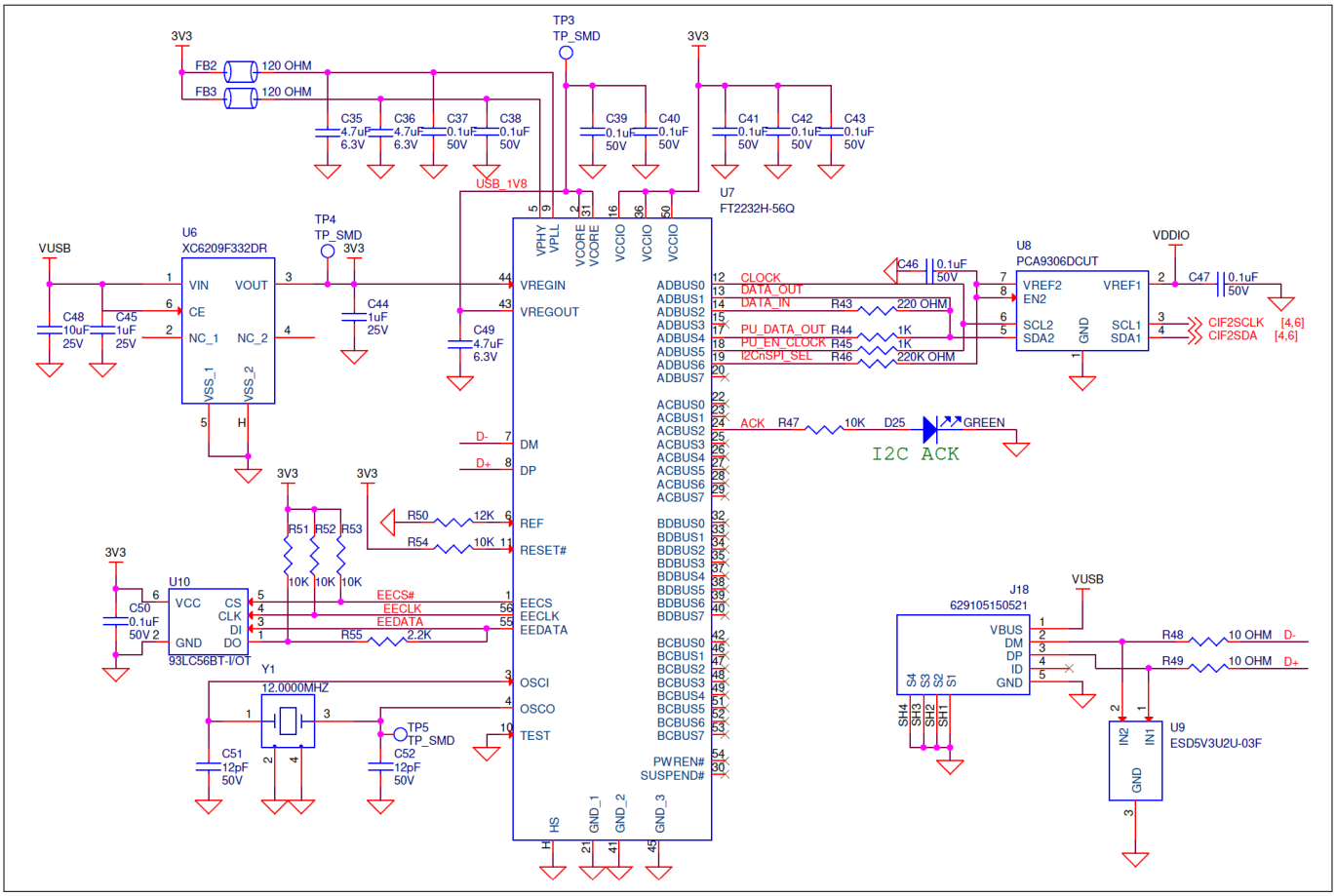

Figure 42 USB serial bridge

4 CYW55310 device I/O mapping

Table 23 gives the detailed I/O mapping of CYW55310 device and how it is connected to the peripherals and connectors on the baseboard. Baseboard connection 1 in the table defines the default configuration, and for other connection to enable, reworks may be required. See the Kit reworks chapter for more details.

Table 23 CYW55310 device I/O mapping

M.2 carrier module pin	M.2 carrier module pin name	CYW55310 pin	Baseboard connection 1 (Default)	Baseboard connection 2	Baseboard connection 3
1	GND	GND	GND	–	–
2	VBAT_M2	ASR_VDDBAT WLLDO_VDDBAT BTLDO_VDDBAT	VCC_3V3	–	–
3	BT_GPIO_2	BT_GPIO_2	ARD_D9	ARD_D8	ALS_INT
4	VBAT_M2	ASR_VDDBAT WLLDO_VDDBAT BTLDO_VDDBAT	VCC_3V3	–	–
5	BT_GPIO_5	BT_GPIO_5	ARD_D7/VOL	-	–
6	BT_GPIO_16	BT_GPIO_16	USER_LED1	D10/SPI_CS	–
7	GND	GND	GND	–	–
8	TDM2_SCK	TDM2_SCK	ARD_TDM2_SCK	EX_TDM2_SCK	–
9	SDIO_CLK	SDIO_CLK	gSPI_SCLK	EXT_SDIO_CLK	–
10	TDM2_WS	TDM2_WS	ARD_TDM2_WS	EX_TDM2_WS	–
11	SDIO_CMD	SDIO_CMD	gSPI_MOSI	EXT_SDIO_CMD	–
12	TDM2_DO	TDM2_DO	ARD_TDM2_DO	EX_TDM2_DO	–
13	SDIO_DATA_0	SDIO_DATA_0	gSPI_MISO	EXT_SDIO_DATA0	–
14	TDM2_DI	TDM2_DI	ARD_TDM2_DI	EX_TDM2_DI	–
15	SDIO_DATA_1	SDIO_DATA_1	gSPI_IRQ	EXT_SDIO_DATA1	–
16	BT_GPIO_17	BT_GPIO_17	USER_LED2	D13/SPI_CLK	–
17	SDIO_DATA_2	SDIO_DATA_2	GND	EXT_SDIO_DATA2	–
18	GND	GND	GND	–	–
19	SDIO_DATA_3	SDIO_DATA_3	gSPI_CS	EXT_SDIO_DATA3	–

(table continues...)

Table 23 (continued) CYW55310 device I/O mapping

M.2 carrier module pin	M.2 carrier module pin name	CYW55310 pin	Baseboard connection 1 (Default)	Baseboard connection 2	Baseboard connection 3
20	BT_HOST_WAKE_M2	BT_HOST_WAKE	J21.17	–	–
21	GPIO0_WL_HOST_WAKE_M2	GPIO0_WL_HOST_WAKE	J21.18	–	–
22	BT_UART_TXD	BT_UART_TXD	KP3_BT_RX	EX_BT_UART_TXD	J22.5
23	TDM1_WS	TDM1_WS	J5.8	–	–
32	BT_UART_RXD	BT_UART_RXD	KP3_BT_TX	EX_BT_UART_RXD	J22.4
33	GND	GND	GND	–	–
34	BT_UART_RTS_N	BT_UART_RTS_N	KP3_BT_CTS	EX_BT_UART_RTS	J22.2
35	TDM1_MCK	TDM1_MCK	J5.2	–	–
36	BT_UART_CTS_N	BT_UART_CTS_N	SW1	KP3_BT_RTS	EX_BT_UART_CTS, J22.6
37	TDM1_SCK	TDM1_SCK	J5.5	–	–
38	GPIO5_WL_JTAG_TDO	GPIO5_WL_JTAG_TDO	KP3_TDO	J9.6	–
39	GND	GND	GND	–	–
40	GPIO4_WL_JTAG_TDI	GPIO4_WL_JTAG_TDI	KP3_TDI	J9.8	–
41	TDM1_DI	TDM1_DI	J5.6	-	–
42	BT_DEV_WAKE_M2	BT_DEV_WAKE_M2	J5.4	J21.10	-
43	TDM1_DO	TDM1_DO	J5.7	-	–
44	GPIO6_WL_JTAG_TRST	GPIO6_WL_JTAG_TRST	KP3_TRST	J9.10	–
45	GND	GND	GND	–	–
46	GPIO2_WL_JTAG_TCK	GPIO2_WL_JTAG_TCK	KP3_TCLK	J9.4	–
47	AMIC_P	MIC_P	AMIC_P	–	–
48	GPIO3_WL_JTAG_TMS	GPIO3_WL_JTAG_TMS	KP3_TMS	J9.2	–
49	BT_GPIO_0	BT_GPIO_0	ARD_D6/ nIRQ	–	–
50	eLPO_M2	LPO_IN_OUT	eLPO_M2	–	–
51	GND	GND	GND	–	–

(table continues...)

Table 23 (continued) CYW55310 device I/O mapping

M.2 carrier module pin	M.2 carrier module pin name	CYW55310 pin	Baseboard connection 1 (Default)	Baseboard connection 2	Baseboard connection 3
52	TDM2_MCK	TDM2_MCK	ARD_TDM2_MCK	–	–
53	DMIC_DATA	DMIC_DQ	DMIC_DATA	–	–
54	BT_REG_ON_M2	BT_REG_ON	SW2	J17.1	J21.8
55	DMIC_CLK	DMIC_CK	DMIC_CLK	–	–
56	WL_REG_ON_M2	WL_REG_ON (RESERVED)	J16.1	J21.7	–
57	GND	GND	GND	–	–
58	BT_GPIO_6	BT_GPIO_6	KP3_SDA	ARD_SDA	J21.6
59	LHL_GPIO_9	LHL_GPIO_9	D12/ SPI_MISO	ARD_A3	–
60	BT_GPIO_7	BT_GPIO_7	KP3_SCL	ARD_SCL	J21.5
61	LHL_GPIO_8	LHL_GPIO_8	Potentiometer	D11/SPI_MOSI	ARD_A2
62	LHL_GPIO_5	LHL_GPIO_5	ARD_A1	KP3_UART_CTS	EX_LHL_GPIO_5/ UART_RTS
63	GND	GND	GND	–	–
64	LHL_GPIO_4	LHL_GPIO_4	ARD_A0	KP3_UART_RTS	–
65	NC	NA	-	-	-
66	WL_DEV_WAKE_M2	WL_DEV_WAKE	J5.3	J21.3	–
67	LHL_GPIO_6	LHL_GPIO_6	ARD_D5/ CUSTOM	–	–
68	LHL_GPIO_2	LHL_GPIO_2	KP3_UART_RXD	D1/ ARD_UART_TXD	EX_LHL_GPIO_2/ UART_TXD
69	GND	GND	GND	–	–
70	LHL_GPIO_3	LHL_GPIO_3	KP3_UART_TXD	D1/ ARD_UART_RXD	EX_LHL_GPIO_3/ UART_RXD
71	BT_GPIO_3	BT_GPIO_3	ARD_D2	ARD_D3	–
72	VBAT_M2	ASR_VDDBAT WLLDO_VDDBAT BTLDO_VDDBAT	VCC_3V3	–	–
73	BT_GPIO_4	BT_GPIO_4	USER_BUTTON	ARD_D4/VOL+	–

(table continues...)

Table 23 (continued) CYW55310 device I/O mapping

M.2 carrier module pin	M.2 carrier module pin name	CYW55310 pin	Baseboard connection 1 (Default)	Baseboard connection 2	Baseboard connection 3
74	VBAT_M2	ASR_VDDBAT WLLDO_VDDBAT BTLDO_VDDBAT	VCC_3V3	–	–
75	GND	GND	GND	–	–

5 Kit reworks

This section provides details about the reworks required to enable the sections in the kit hardware that are not available by default.

5.1 JTAG connector mounting

To enable the JTAG/COEX access from the kit, you need to mount the J9 connector and resistors R211, R212, R213, and R214 to connect the CYW55310 device GPIOs to J9 and need to isolate the connection to the KP3 by removing resistors R210, R216, R217, and R218.

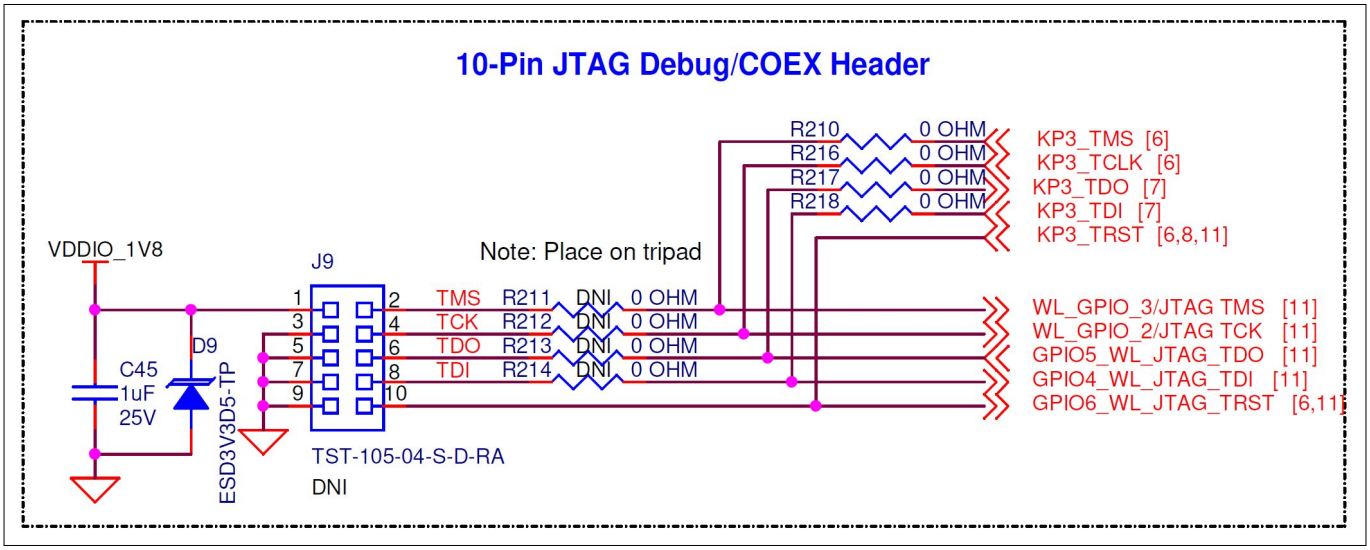

Figure 43 JTAG connector rework

5.2 UART connector mounting

To enable the external UART programming, you need to mount the J22 connector and level translator (U24), which is not mounted by default. The path to the connector from CYW55310 can be enabled by mounting R219, R220, R221, and R222 resistors and removing the connections R137, R139, R141, and R142 resistors.

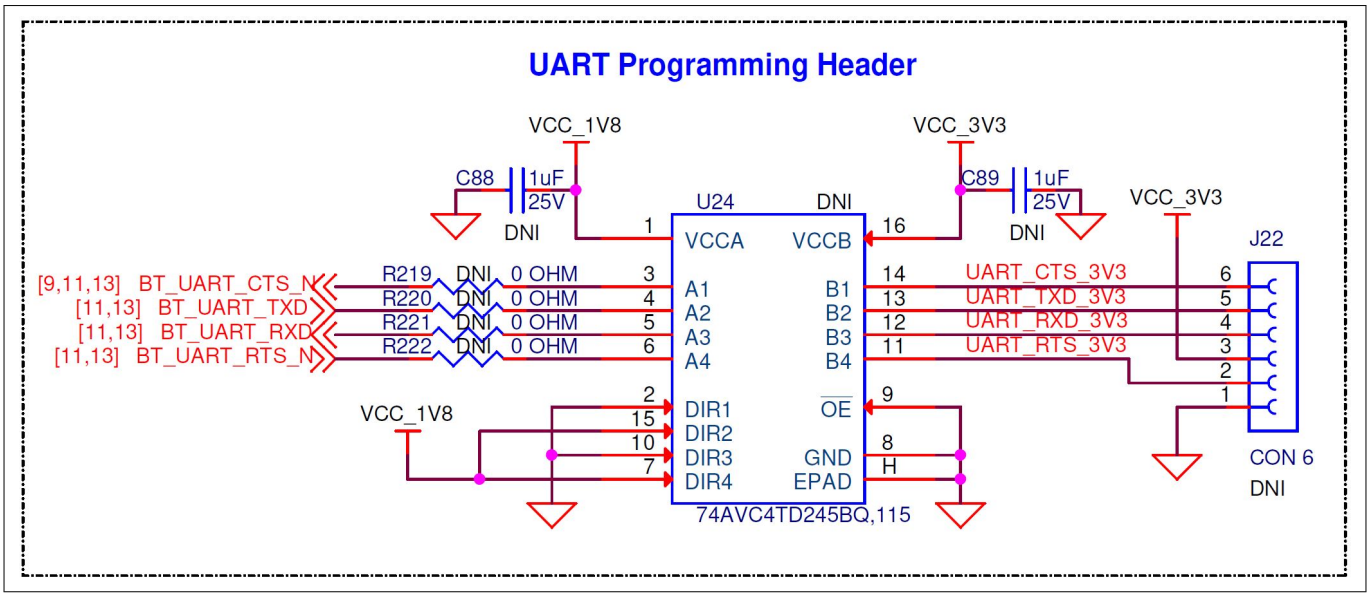

Figure 44 UART connector rework

5.3 CYW55310 device pin multiplex options

CYW55310 device major interfaces can be switched to the external host interface or Arduino header by mounting the series resistor in the path between the device and the external connector or to the Arduino header in the multiplex options.

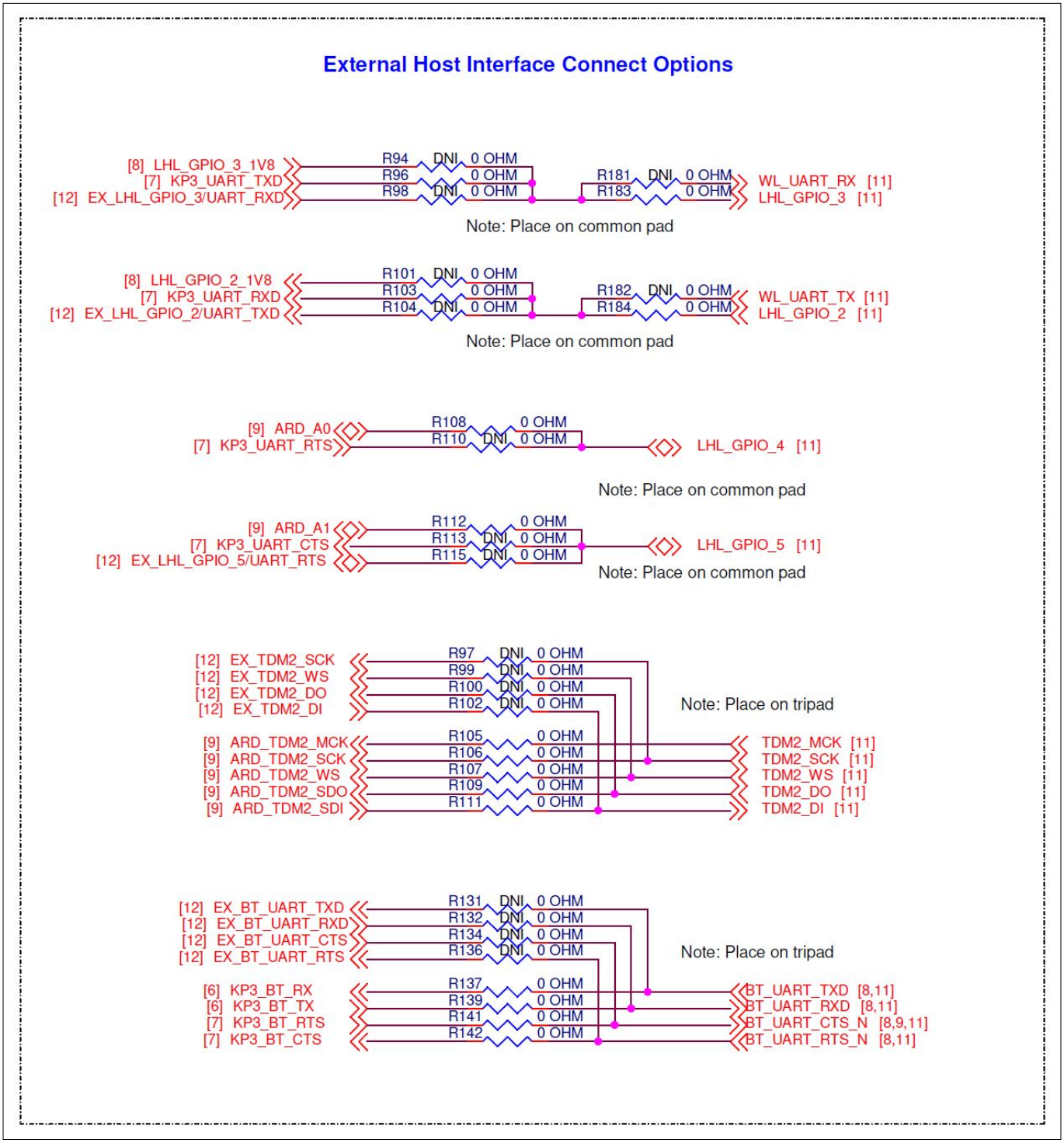

Figure 45 External host interface resistor mount options

5 Kit reworks

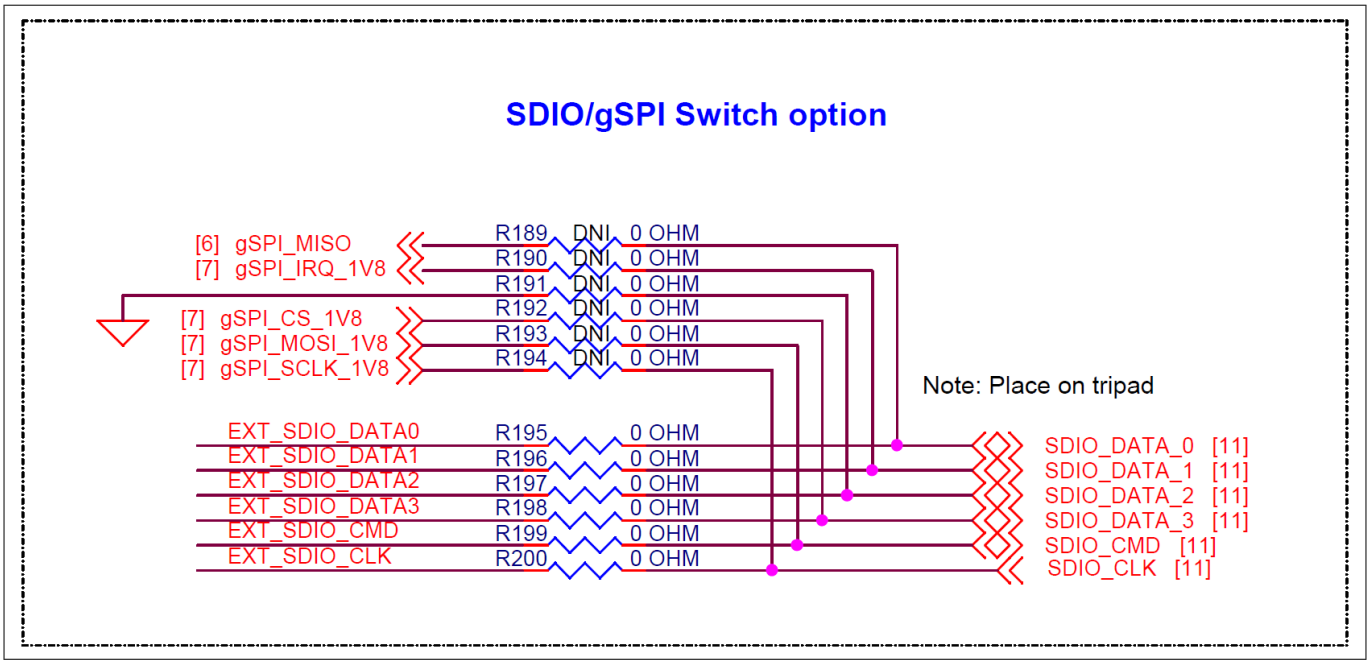

Figure 46 SDIO interface external host interface connect option

Revision history

Document revision	Date of release	Description of changes
**	2026-03-26	Initial release

Trademarks

The Bluetooth® word mark and logos are registered trademarks owned by Bluetooth® SIG, Inc., and any use of such marks by Infineon is under license.

Trademarks

All referenced product or service names and trademarks are the property of their respective owners.

Edition 2026-03-26

Published by

Infineon Technologies AG

81726 Munich, Germany

© 2026 Infineon Technologies AG

All Rights Reserved.

Do you have a question about any aspect of this document?

Email: erratum@infineon.com

Document reference
IFX-bag1768226644082

For further information on the product, technology, delivery terms and conditions and prices please contact your nearest Infineon Technologies office (www.infineon.com)

Warnings

Due to technical requirements products may contain dangerous substances. For information on the types in question please contact your nearest Infineon Technologies office.

Except as otherwise explicitly approved by Infineon Technologies in a written document signed by authorized representatives of Infineon Technologies, Infineon Technologies' products may not be used in any applications where a failure of the product or any consequences of the use thereof can reasonably be expected to result in personal injury.