F²MC-8FX Family

MCU Board for MB95FV100

MB2146-304, Operation Manual

Doc. # 002-07492 Rev. *A

Cypress Semiconductor
198 Champion Court
San Jose, CA 95134-1709

Phone (USA): 800.858.1810
Phone (Intnl): +1.408.943.2600
www.cypress.com

Copyrights

© Cypress Semiconductor Corporation, 2007-2016. This document is the property of Cypress Semiconductor Corporation and its subsidiaries, including Spansion LLC ("Cypress"). This document, including any software or firmware included or referenced in this document ("Software"), is owned by Cypress under the intellectual property laws and treaties of the United States and other countries worldwide. Cypress reserves all rights under such laws and treaties and does not, except as specifically stated in this paragraph, grant any license under its patents, copyrights, trademarks, or other intellectual property rights. If the Software is not accompanied by a license agreement and you do not otherwise have a written agreement with Cypress governing the use of the Software, then Cypress hereby grants you a personal, non-exclusive, nontransferable license (without the right to sublicense) (1) under its copyright rights in the Software (a) for Software provided in source code form, to modify and reproduce the Software solely for use with Cypress hardware products, only internally within your organization, and (b) to distribute the Software in binary code form externally to end users (either directly or indirectly through resellers and distributors), solely for use on Cypress hardware product units, and (2) under those claims of Cypress's patents that are infringed by the Software (as provided by Cypress, unmodified) to make, use, distribute, and import the Software solely for use with Cypress hardware products. Any other use, reproduction, modification, translation, or compilation of the Software is prohibited.

TO THE EXTENT PERMITTED BY APPLICABLE LAW, CYPRESS MAKES NO WARRANTY OF ANY KIND, EXPRESS OR IMPLIED, WITH REGARD TO THIS DOCUMENT OR ANY SOFTWARE OR ACCOMPANYING HARDWARE, INCLUDING, BUT NOT LIMITED TO, THE IMPLIED WARRANTIES OF MERCHANTABILITY AND FITNESS FOR A PARTICULAR PURPOSE. To the extent permitted by applicable law, Cypress reserves the right to make changes to this document without further notice. Cypress does not assume any liability arising out of the application or use of any product or circuit described in this document. Any information provided in this document, including any sample design information or programming code, is provided only for reference purposes. It is the responsibility of the user of this document to properly design, program, and test the functionality and safety of any application made of this information and any resulting product. Cypress products are not designed, intended, or authorized for use as critical components in systems designed or intended for the operation of weapons, weapons systems, nuclear installations, life-support devices or systems, other medical devices or systems (including resuscitation equipment and surgical implants), pollution control or hazardous substances management, or other uses where the failure of the device or system could cause personal injury, death, or property damage ("Unintended Uses"). A critical component is any component of a device or system whose failure to perform can be reasonably expected to cause the failure of the device or system, or to affect its safety or effectiveness. Cypress is not liable, in whole or in part, and you shall and hereby do release Cypress from any claim, damage, or other liability arising from or related to all Unintended Uses of Cypress products. You shall indemnify and hold Cypress harmless from and against all claims, costs, damages, and other liabilities, including claims for personal injury or death, arising from or related to any Unintended Uses of Cypress products.

Cypress, the Cypress logo, Spansion, the Spansion logo, and combinations thereof, PSoC, CapSense, EZ-USB, F-RAM, and Traveo are trademarks or registered trademarks of Cypress in the United States and other countries. For a more complete list of Cypress trademarks, visit cypress.com. Other names and brands may be claimed as property of their respective owners.

Preface

Thank you for purchasing the MCU board for the F^{2}MC*-8FX family MB95RV100 (model number: MB2146-304).

The MB2146-304 is a development support tool for developing and evaluating applied products based on the F^{2}MC-8FX family of microcontrollers manufactured by Cypress.

This manual is intended for engineers who use the MB2146-304 (referred to below as the MCU board) to develop applied products based on Cypress's F^{2}MC-8FX family microcontrollers. The manual describes how to handle the MCU board and its functions as well as the setting procedures.

Be sure to read this manual before using the MCU board.

- Using the product safely

This manual contains important information required for using the MB2146-304 safely. Be sure to read through the manual before using the product and follow the instructions contained therein to use it correctly.

In particular, carefully read the "Caution of the products described in this document" at the beginning of this manual to understand the requirements for safe use of the product before using it.

After reading the manual, keep it handy for future reference.

- Warranty and liability disclaimers

The specifications of the product are subject to change without notice.

In no event shall Cypress be liable for any loss or damages whatsoever directly or indirectly arising out of the use of the product.

- Product operating environment

The operating temperature for the product ranges from 5 °C to 35 °C and the operating relative humidity from 20% to 80%. Avoid using the product in hot or humid environment and prevent condensation.

The product is a printed circuit board unit without a chassis such that all of the electronic components are exposed. Therefore, neither put anything on the product nor touch or let an electrically charged material contact a metal part of it. Once the product has been powered, try to keep those objects away from it which can short-circuit it or easily catch fire and burn. Use the product as horizontal as possible and avoid operating it at a place exposed to strong vibration, dust, or explosive gas.

Note that using the product not in the above operating environment may unexpectedly cause personal injury to the user (or another person if present near the product) or physical damage to properties around the product.

You should also keep the packaging materials used for shipping the product. They work well as they are when you transport the product again, for example, if it becomes out of order and needs to be repaired.

- Related manuals

Refer to the following manuals for additional information:

- Hardware Manual of the MCU used
- Data Sheet of the MCU used
- “MB2146-09 BGM Adapter Instruction Manual”
- Related “Header Board Instruction Manuals”
- ““SOFTUNE Workbench Operation Manual”
- “SOFTUNE Workbench USER’S Manual”

- Caution of the products described in this document

The following precautions apply to the product described in this manual.

CAUTION	Indicates a potentially hazardous situation which, if not avoided appropriately, may result in minor or moderate injury and/or damage to the product or the equipment to which the product is connected, to software resources such as data, or to other properties.
Cuts, Damage	Before moving the product, be sure to turn off all the power supplies and unplug the cables. Watch your steps when carrying the product. Do not use the product in an unstable location such as a place exposed to strong vibration or a sloping surface. Doing so may let the product fall, resulting in an injury or fault.
Cuts	The product has some sharp-pointed or edged parts inevitably exposed, such as jumper plugs. Use meticulous care in handling the product not to get injured with such pointed parts.
Damage	Neither put anything on or apply shock to the product. Once the product has been powered, do not carry it. Doing either may cause a fault due to overloading or shock.
Damage	Since the product contains many electronic components, keep it away from direct sunlight, high temperature, and high humidity to prevent condensation. Do not use or store the product where it is exposed to much dust or a strong magnetic or electric field for an extended period of time. An adverse operating or storage environment can cause a fault.
Damage	Use the product within the ranges of its general specifications. Operating it outside the range of any general specification may cause a fault.
Damage	To prevent electrostatic breakdown, do not let your finger or an object touch any metal part of the connector. Before handling the product, touch a metal object (such as a door knob) to discharge static electricity from your body.
Damage	Before turning the power on, in particular, be sure to finish making all the required connections. To set up and use the product, follow the instructions given in this document. Using the product incorrectly or inappropriately may cause a fault.
Damage	Before plugging or unplugging any cable for this product, be sure to turn the power supply off. When unplugging a cable, remove it while holding the connector without pulling the cable itself. Pulling the cable itself or bending it may expose or disconnect the cable core, resulting in a fault.
Damage	Because the product has no casing, it is recommended that it be stored in the original packaging. Re-transporting the product may damage it to cause a fault. Keep the packaging materials used for shipment of the product and use them when re-transporting it.

Contents



1. Product Outline **4**

2. Checking the Delivered Product **6**

3. Connections **7**

4. How to Setup **9**

5. Product Specifications **14**

Revision History **21**

1. Product Outline

The MB2146-304 is the MCU board (model number: MB2146-304) mounting an evaluation MCU for the F^{2}MC-8FX Family of Fujitsu 8-bit microcontrollers. The F^{2}MC-8FX evaluation environment, consists of a combination of three products: the header board, MCU board, and BGM adapter (model number: MB2146-09) as shown in Figure 1-1.

Figure 1-1. System configuration

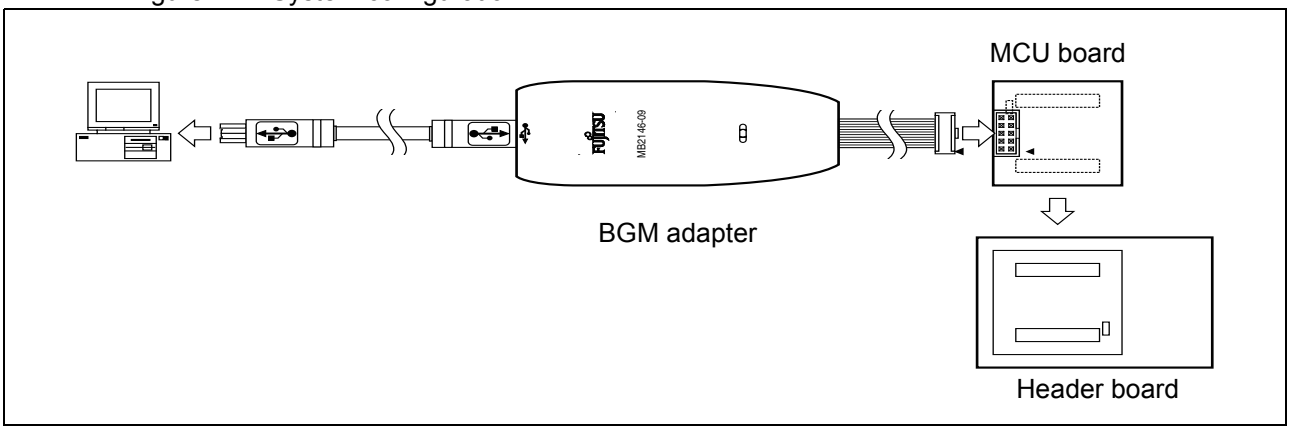

- Product configuration

Table 1-1 lists the product configuration in the MCU board package. Table 2 lists optional parts for the MCU board package that can be purchased separately.

Table 1-1. Product configuration

Name	Model number	Description
MCU board for the F^{2}MC-8FX MB95RV100*	MB2146-304	MCU board with built-in MB95RV100

*: Neither the oscillator nor the capacitor is bundled with the MB2146-304. Therefore, prepare them separately.

Table 1-2. Optional parts

Name	Model number	Description
BGM adapter*1	MB2146-09	ICE unit for F^{2}MC-8FX
Header board*2	MB2146-2xx	Connector/package conversion header board

*1: To use the BGM adapter, you need additional tools such as debugger software.
*2: The header board is an interface board to connect the MCU board to your user system. Choose and purchase a type of header board which is applicable to the production MCU to be used.

- Appearance and part name

The appearance of a MCU board and the part name are shown in Figure 1-2.

Figure 1-2. MCU board appearance figure

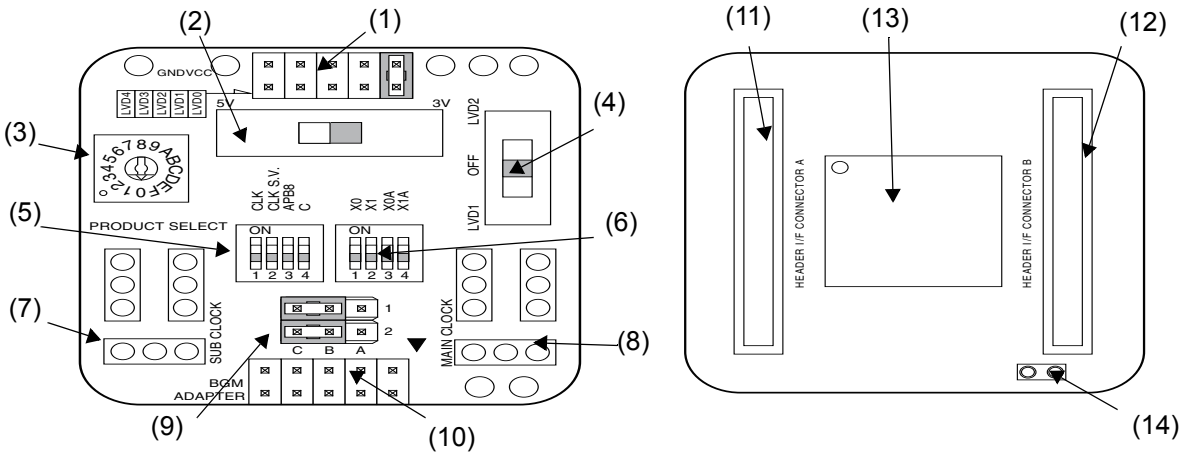

(1) LVD2 detection voltage selector jumper plug*
(2) Voltage selector switch
(3) Product selector switch
(4) LVD selector switch
(5) Clock selector switch (SW1-1: CLK)
Clock supervisor selector switch (SW1-2 : CLK S.V.)
APB8 bus output selector switch (SW1-3: APB8) (for extension) *
C-pin selector switch (SW1-4: C)
(6) Clock input selector switch (SW2-1: X0, SW2-2: X1, SW2-3: X0A, SW2-4: X1A)
(7) Sub clock crystal oscillator mounting socket
(8) Main clock crystal oscillator mounting socket
(9) Sub clock selector jumper plug
(10) BGM adapter connector
(11) Header board I/F connector A
(12) Header board I/F connector B
(13) Evaluation MCU (MB95RV100)
(14) Incorrect insertion prevention guard

* : Note used during debugging.

2. Checking the Delivered Product

Before using the MCU board, confirm that the following components are included in the box:

- MCU board: 1
- Operation manual (English version, this manual) : 1
- Operation manual (Japanese version) : 1

3. Connections

- Connecting the MCU board to the header board

Align the MCU board the header board facing each other, then plug their mating connectors together. Those connectors are provided with incorrect insertion prevention guards located diagonally. Position the two boards so that the incorrect insertion prevention guards do not interfere with each other and plug the connectors together completely (see “Figure 3-1”).

Figure 3-1. onnection of MCU board and header board

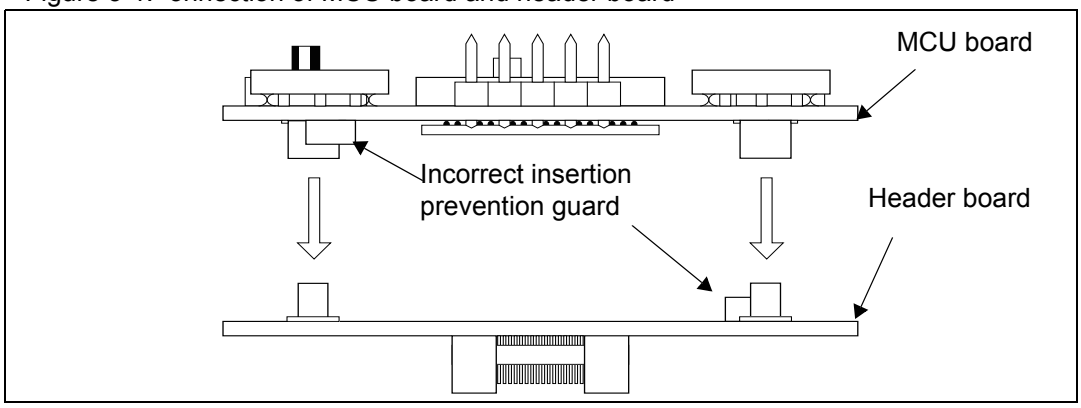

- Connecting the MCU board to the BGM adapter

Connect the BGM adapter to the MCU board. Plug the BGM adapter's interface connector completely into the BGM adapter connector on the MCU board such that the index marks (▼) aligned (see Figure 3-2”).

Figure 3-2. Figure 4 Connection of MCU board and BGM adapter

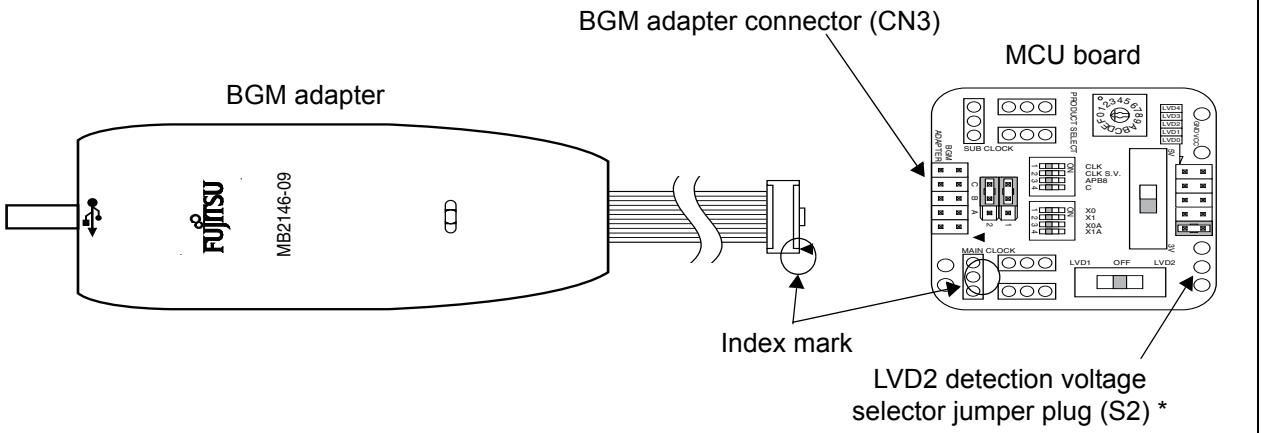

* : Be sure to connect the BGM adapter correctly to the BGM adapter connector (CN3) on the MCU board. It can damage the MCU board if it is accidentally connected to the LVD2 detection voltage selector jumper plug (S2).

- Note on connection
  a. Be sure to connect the BGM adapter connector (CN3). The BGM adapter connector and the LVD2 detection voltage selector jumper plug have the same shape (see “Figure 3-3”). The MCU board may break if the BGM adapter connector is accidentally plugged into the LVD2 detection voltage selector jumper plug (S2) on the other side of the board.

Figure 3-3. Connection direction of BGM adapter

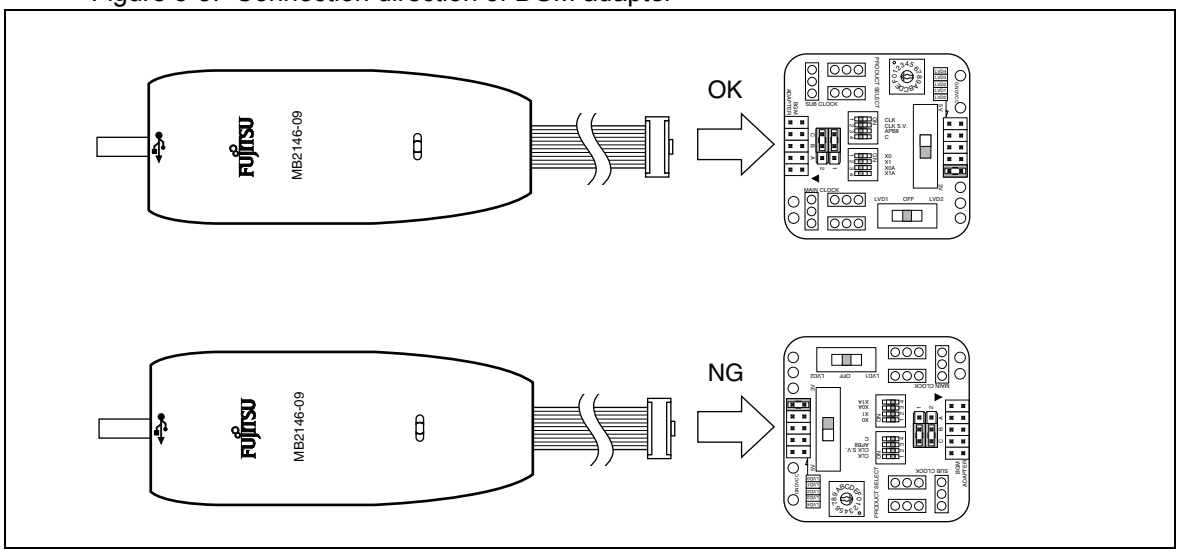

  b. To supply a main clock signal and sub clock signal from the user system, provide an oscillation circuit on the user system so that it supplies the clock signal to the MCU board via a buffer circuit.

- Disconnection

1. Remove the BGM adapter from the MCU board. Holding the MCU board firmly, pull the BGM adapter vertically from the BGM adapter connector on the MCU board.
2. Remove the header board from the MCU board. Remove it with uniform force without applying force to only one point.

4. How to Setup

- How to the switch and jumper plug on a MCU board setup

Please set the following switches referring to “Figure 4-1 The switch and jumper plug on a MCU board”.

1. Set the clock selector switch (SW1-1) to ON or OFF to disable or enable the sub clock, respectively.
2. Set the clock supervisor selector switch (SW1-2) to OFF.
3. Set the C-pin selector switch (SW1-4) to OFF.
4. Set the clock input selector switch (SW2).
   Check that value with “Setting of the clock input selector switch (SW2)”.
5. Set the product selector switch (SW3) to the value corresponding to the number of pins on the production MCU.
   Check that value with “Setting of the product selector switch (SW3)”.
6. Set the LVD selector switch (SW4) to OFF.
7. Set the power supply selector switch (SW5) to 3V.
8. Set the sub clock selector jumper plug (S1).

Check that value with “Setting of the sub clock selector jumper plug (S1)”.

Please use with following settings, because APB8 bus and LVD2 functions are not available.

- Set the APB8 bus output selector switch (SW1-3) to OFF.
- Set the LVD2 detection voltage selector jumper plug (S2) to LVD0.
  Check that value with “Setting of the LVD2 detection voltage selector jumper plug (S2)”.

Figure 4-1. The switch and jumper plug on a MCU board

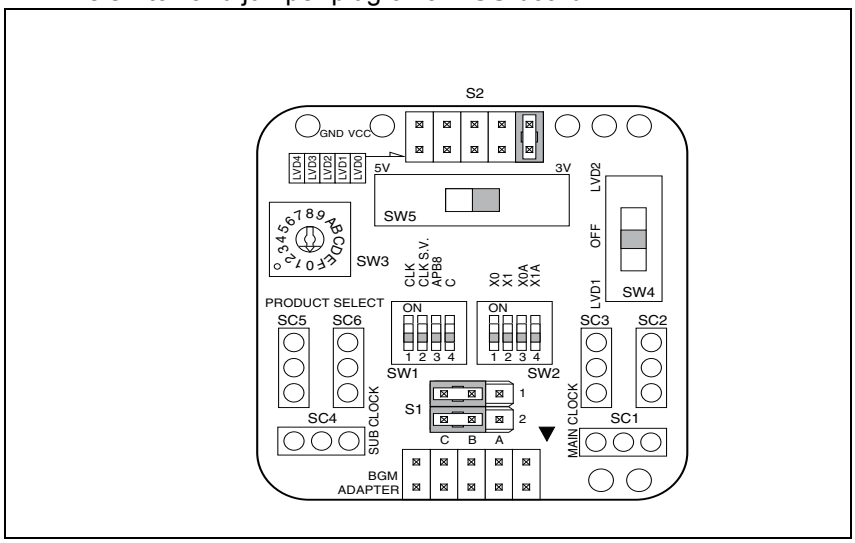

- How to oscillator mounting on a MCU board

Mount a crystal or ceramic oscillator in the crystal oscillator mounting sockets (for the main clock and sub clock) on the MCU board.

The MCU board has one crystal oscillator mounting socket for the main clock and the other for the sub clock. To distinguish them from each other, the board has the “MAIN CLOCK” and “SUB CLOCK” labels are printed on the board near the main clock socket and sub clock socket. Mount the crystal or ceramic oscillator along with the capacitors on the MCU board (see “Figure 4-2”).

Figure 4-2. The example of mount of crystal or ceramic oscillator

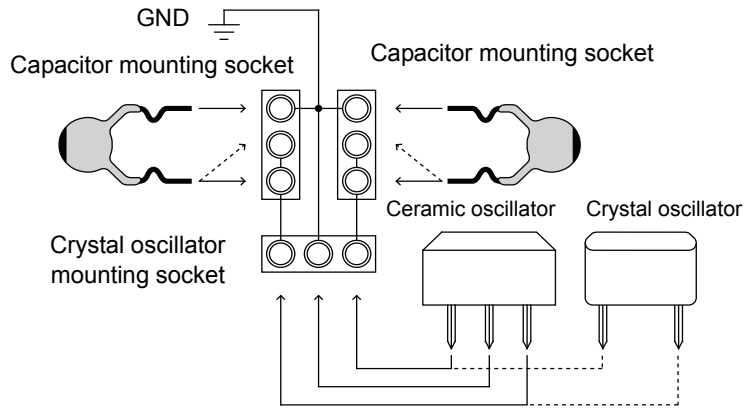

- For information on the crystal oscillator such as its frequency, refer to the datasheet for the evaluation MCU.
- For the capacitance of the capacitor, refer to the datasheet for the crystal oscillator, etc.
- Neither the crystal oscillator nor the capacitor is bundled with this product.

- Setting of the switch and jumper plug

The positions of the switch and jumper plug on the MCU board is shown in Figure 4-3, and specifications are shown in Table 4-2.

Figure 4-3. Positions of switches and jumper plugs on the MCU board

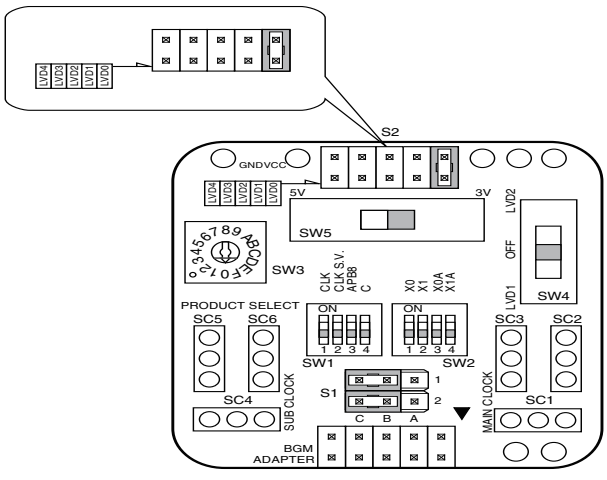

Table 4-1. Switch and jumper plug settings

Switch/Jumper plug		Settings	Shipment setting
Clock selector switch	SW1-1	ON : Disable the sub clock OFF : Enable the sub clock	OFF
Clock supervisor selector switch	SW1-2	ON : Enable the clock supervisor function OFF : Disable the clock supervisor function	OFF
APB8 bus output selector switch	SW1-3	ON : Enable the APB8 bus OFF : Disable the APB8 bus	OFF
C-pin selector switch	SW1-4	ON : Connect the C pin to the on-board 0.1μF capacitor OFF : Disconnect the C pin from the on-board 0.1μF capacitor note : Always set to "OFF" for this model.	OFF
Clock input selector switch	SW2	Select the main clock and sub clock source on the MCU board or on the user system (See "Setting of the clock input selector switch (SW2)").	OFF
Product selector switch	SW3	Set this switch depending on the number of pins on the target MCU to be used (See "■Setting of the product selector switch (SW3)").	0
LVD selector switch	SW4	Select the low-voltage detection function. LVD1 : LVD1 enabled OFF : Both LVD1 and LVD2 enabled LVD2 : LVD2 enabled	OFF
Voltage selector switch	SW5	Select 5V or 3V supply for the operating voltage of the evaluation MCU. 5V : 5V supply 3V : 3V supply note : Always set to "3V" for this model.	3V
Sub clock selector jumper plug	S1	Select whether to use the sub clock. (See "Setting of the sub clock selector jumper plug (S1)").	Jumper of B-C
LVD2 detection voltage selector jumper plug	S2	Set the LVD2 detection voltage (See "Setting of the LVD2 detection voltage selector jumper plug (S2)").	LVD0

■ Setting of the clock input selector switch (SW2)

Figure 4-4 shows the clock input selector switch. Table 4-2 lists switch positions for the main clock supply source. Table 4-3 lists switch positions for the sub clock supply source.

Figure 4-4. Clock input selector switch (SW2)

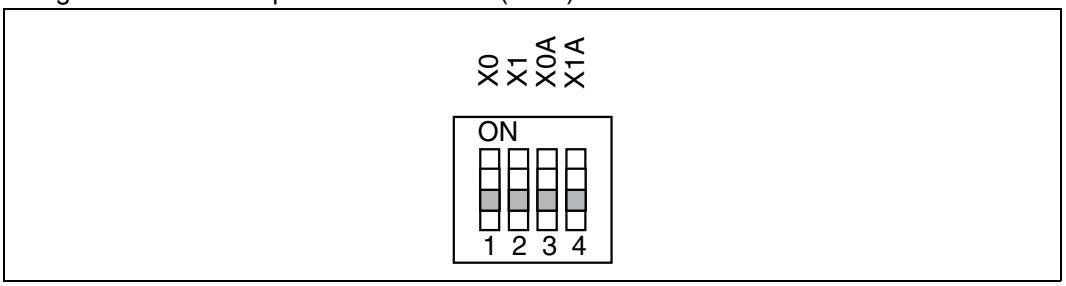

Table 4-2. Setting of main clock supply source

Main clock supply source	Settings of the clock input selector switch	
	SW2-1	SW2-2
Clock area	OFF	OFF
User system	ON	ON

Table 4-3. Setting of the sub clock supply source

Sub clock supply source	Settings of the clock input selector switch	
	SW2-3	SW2-4
Clock area	OFF	OFF
User system	ON	ON

- Setting of the product selector switch (SW3)

Table 4-4 lists the setting of product selector switch and product type.

Table 4-4. Setting of the product selector switch

Switch setting	Product type
0	100-pin package type
1	80-pin package type
2	64-pin package type
3	48-pin, 52-pin package type
4	32-pin package type
5	28-pin package type
6	20-pin package type
7	Setting Prohibited
8	100-pin package, LCD function integrated type
9	80-pin package, LCD function integrated type
A	64-pin package, LCD function integrated type
B	48-pin, 52-pin package, LCD function integrated type
C	Setting Prohibited
D	
E	
F	

- Setting of the sub clock selector jumper plug (S1)

Table 4-5lists jumper plug positions and sub clock selection. Figure 10 shows examples of sub clock selection.

Table 4-5. Setting of sub clock selector

Sub clock			Settings of the sub clock selector jumper plug (S1)		Example of settings
Used	Supply source	M1 correspondence pin	X0A	X1A	
enable	Clock area	X0A : R3 pin	Jumper of 1: B - 1: C	Jumper of 2: B - 2: C	Example 1
	User system*	X1A : V1 pin	Jumper of 1: A - 1: B	Jumper of 2: A - 2: B	Example 2
disable	-				

*: Oscillation is not guaranteed when the crystal oscillator is mounted on the user system.

Figure 4-5. The example of sub clock selection

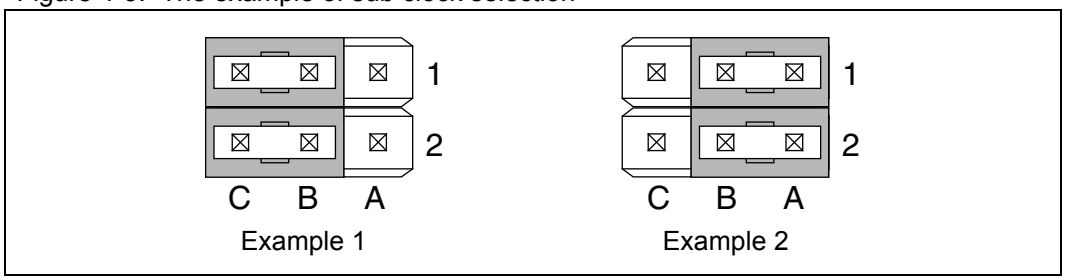

- Setting of the LVD2 detection voltage selector jumper plug (S2)

Figure 4-6 shows the setting of the LVD2 detection voltage selector jumper plug (S2). Table 4-6 lists jumper plug positions for detection voltages.

These settings cannot be used during debugging. Set the jumper to LVD0 to use the debugger.

Figure 4-6. The LVD2 detection voltage selector jumper plug (S2)

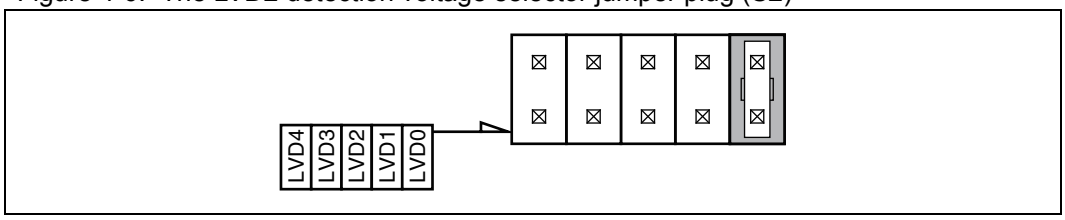

Table 4-6. Setting of the LVD2 detection voltage selector jumper plug

Jumper plug position	LVD2 setting value
LVD0	+ 3.0V
LVD1	+ 2.9V
LVD2	+ 2.8V
LVD3	+ 2.7V
LVD4	+ 2.6V

5. Product Specifications

■ General specifications

The general specifications of the MCU board are shown in Table 9.

Table 5-1. MCU board general specifications

Item	Specification
Name	MCU board for the F^2MC-8FX MB95RV100
Model number	MB2146-304
Power supply	Evaluation MCU (MB95RV100) : + 3.0V to + 3.6V (UVcc) MCU board power supply : + 3.0V to + 3.6V (supplied by the user system)
Frequency of operation	Max. 10.0MHz
Operating temperature	5 °C to 35 °C
Operating humidity	20 % to 80 % (No condensation is allowed.)
Dimensions	40.0mm (W) × 40.0mm (D) × 14.6mm (H)
Weight	13g

■ Functional explanation

The functional specifications of the MCU board are shown in Table 5-2, and a functional block diagram is shown in Figure 5-1.

Table 5-2. MCU board functional specifications

Item	Description
MCU board function	Serves as the adapter used in combination with the BGM adapter and header board to provide connection between the BGM adapter and evaluation MCU and between the evaluation MCU and user system.
Switches	Serve for clock selection, clock supervisor selection, APB8 bus output selection, C-pin setting, clock selection, product selection, low-voltage detection setting, and voltage selection.
Jumper plugs	The jumper plugs on the MCU board can be used to make various settings for low-voltage detection and clock selection.
Clock mounting socket	The crystal oscillator mounted socket on the MCU board is used to supply clock signals to the main clock (X0/X1) and sub clock (X0A/X1A) pins on the evaluation MCU from the MCU board.

Figure 5-1. MCU board functional block diagram

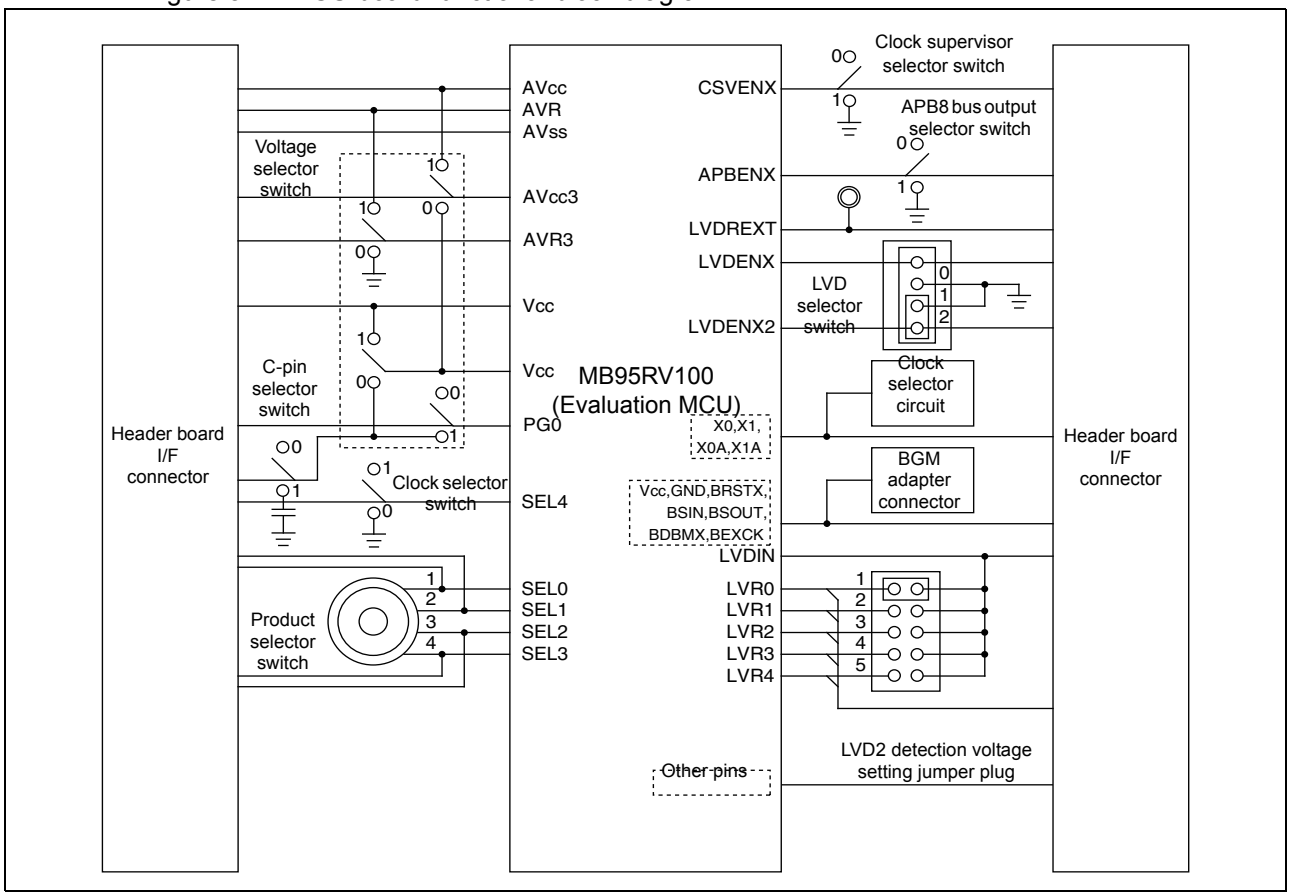

■ Clock settings

Figure 13 shows the clock-related circuit diagram.

Figure 5-2. Clock selector circuit

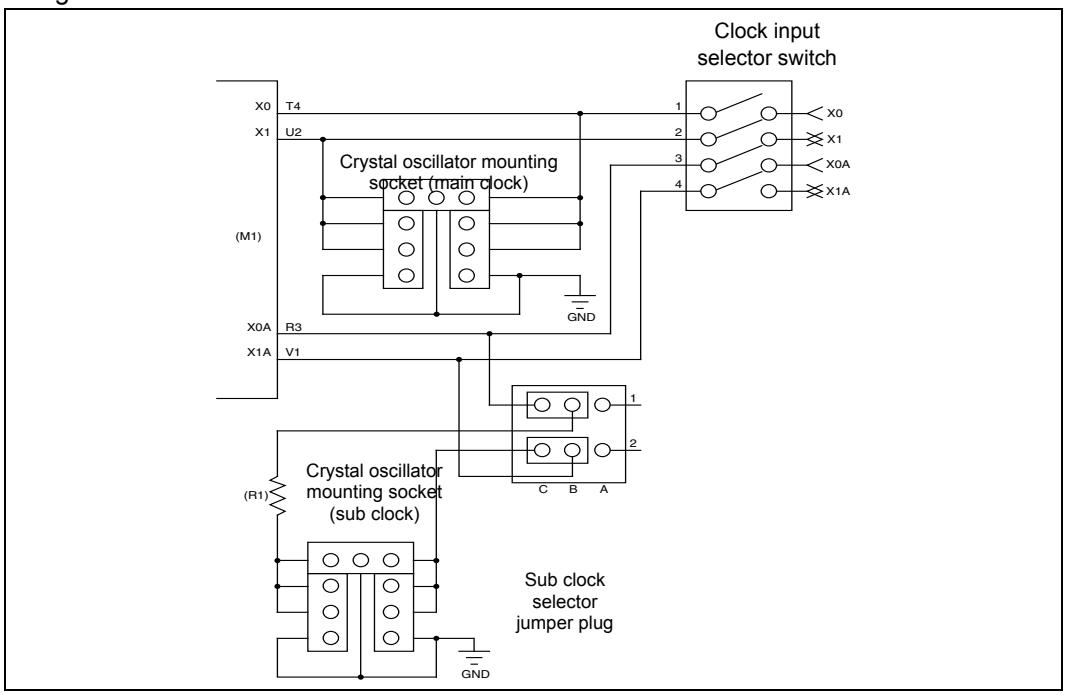

- Header board specifications

Figure 5-3 shows recommended dimensions of the header board connected to the MCU board.

Table 5-3 lists the general specifications of the header board.

Figure 5-3. Recommended dimensions of the header board (Top view)

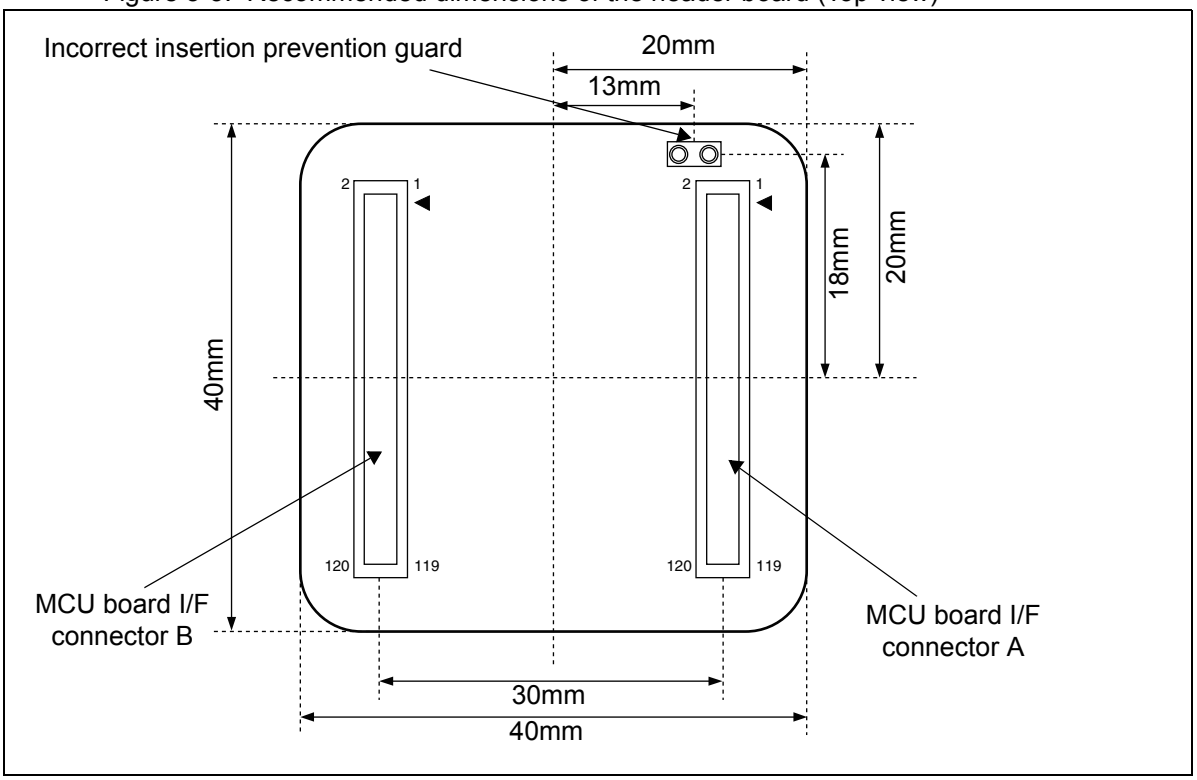

Table 5-3. General specifications of the header board.

Item	Description
MCU board interface connector	120 pin 0.5mm pitch 2 piece connector (Straight) × 2 Model number: WR-120SB-VF-N1 (Japan Aviation Electronics Industry, Limited)
Incorrect insertion prevention guard	2 pin SIP socket Model number: PCW-3-1-1PW (MAC EIGHT)
Spacing between the MCU and header boards when engaged	Approx. 5.0mm

■ Connector socket specifications

The specifications of a connector and a socket is shown in Table 5-4.

Table 5-4. Connector and socket specifications

Item	Description
Header board interface connector	Connects the MCU board to the header board.
BGM adapter connector	Connects the MCU board to the BGM adapter.
Main clock mounting socket	Mounts the main clock crystal oscillator.
Sub clock mounting socket	Mounts the sub clock crystal oscillator.

- Pin assignment of header board I/F connector

Table 5-4 and Table 5-5 lists the pin assignments of the header board interface connectors on the MCU board.

Figure 5-4. Pin assignment of header board I/F connector A

Connector Number	Evaluation MCU Pin Number	Signal Line Name	Connector Pin Number	Evaluation MCU Pin Number	Signal Line Name	Connector Pin Number	Evaluation MCU Pin Number	Signal Line Name
1	A9	PC4	41	E2	LVR3	81	P3	BSOUT
2	B9	PC1	42	E1	V_{SS} *1	82	P4	BDBMX
3	C9	PC2	43	F4	LVDREXT	83	R1	P83
4	D9	PC3	44	F3	NC *2	84	R2	BRSTX
5	A8	PC0	45	F2	LVDENX	85	R3	X0A
6	B8	PB4	46	F1	P22A	86	R4	RSTX
7	C8	PB5	47	–	GND *1	87	T1	ROMS1
8	D8	PB6	48	–	GND *1	88	T2	BSIN
9	A7	PB7	49	G4	P20A	89	T3	Vss *1
10	B7	PB2	50	G3	SYS-ELX	90	T4	X0
11	C7	PB0	51	G2	P21A	91	U1	BEXCK
12	D7	PB1	52	G1	P23A	92	U2	X1
13	A6	PB3	53	H4	P24A	93	U3	MOD
14	B6	PA2	54	H3	P25A	94	U4	PF2
15	C6	P95	55	H2	P26A	95	V1	X1A
16	D6	PA0	56	H1	P27A	96	V2	V_{CC}
17	A5	PA3	57	J4	P24B	97	–	GND *1
18	B5	P94	58	J3	P50	98	–	GND *1
19	C5	P90	59	J2	P23B	99	V3	PINT0
20	D5	P91	60	J1	P51	100	V4	PSEL_EXT
21	A4	PA1	61	K1	P52	101	R5	PF1
22	A3	P93	62	K2	P55	102	T5	PF0
23	–	GND *1	63	K3	P54	103	U5	NC *2
24	–	GND *1	64	K4	P53	104	V5	PEN-ABLE
25	A2	CSVENX	65	L1	P70	105	R6	APBENX
26	A1	Vss *1	66	L2	P74	106	T6	PINT1
27	B4	P92	67	L3	P73	107	U6	PCLK
28	B3	TCLK	68	L4	P72	108	V6	PADDR0
29	B2	VDDF *1	69	M1	P71	109	R7	PAC-TIVE
30	B1	LVDIN	70	M2	P76	110	T7	PLOCK
31	C4	V_{CC}	71	M3	P80	111	U7	PWRITE
32	C3	V_{CC}	72	M4	P77	112	V7	PADDR1
33	C2	LVDENX2	73	–	GND *1	113	R8	PADDR2
34	C1	LVR4	74	–	GND *1	114	T8	PADDR3

Connector Number	Evaluation MCU Pin Number	Signal Line Name	Connector Pin Number	Evaluation MCU Pin Number	Signal Line Name	Connector Pin Number	Evaluation MCU Pin Number	Signal Line Name
35	D4	NC *2	75	N1	P75	115	U8	PADDR 4
36	D3	LVDOUT	76	N2	P82	116	V8	PADDR 5
37	D2	LVR2	77	N3	PG0	117	R9	PADDR 7
38	D1	NC *2	78	N4	P84	118	T9	PRDATA0
39	E4	LVR1	79	P1	P81	119	U9	PADDR 6
40	E3	LVR0	80	P2	ROMS0	120	V9	PRDATA1

Table 5-5. Pin assignment of header board I/F connector B

Connector Pin Number	Evaluation MCU Pin Number	Signal Line Name	Connector Pin Number	Evaluation MCU Pin Number	Signal Line Name	Connector Pin Number	Evaluation MCU Pin Number	Signal Line Name
1	A10	PC5	41	E17	NC *2	81	P16	P34
2	B10	PD0	42	E18	SEL0	82	P15	P35
3	C10	PC6	43	F15	SEL3	83	R18	P44
4	D10	PC7	44	F16	SEL4	84	R17	P36
5	A11	PD1	45	F17	SEL1	85	R16	P31
6	B11	PD2	46	F18	P04C	86	R15	AVcc3
7	C11	PD3	47	–	GND *1	87	T18	P40
8	D11	PD4	48	–	GND *1	88	T17	P32
9	A12	PD5	49	G15	P06C	89	T16	AVss
10	B12	PD7	50	G16	P07C	90	T15	AVR
11	C12	P61	51	G17	P05C	91	U18	P33
12	D12	P60	52	G18	P00C	92	U17	P30
13	A13	PD6	53	H15	P01C	93	U16	AVR3
14	B13	P64	54	H16	P02C	94	U15	P15
15	C13	P66	55	H17	P03C	95	V18	AVcc
16	D13	P65	56	H18	P07A	96	V17	NC *2
17	A14	P62	57	J15	P04A	97	–	GND *1
18	B14	PE0A	58	J16	P05A	98	–	GND *1
19	C14	PE3A	59	J17	P06A	99	V16	P14
20	D14	PE2A	60	J18	P03A	100	V15	P10
21	A15	P63	61	K18	P02A	101	R14	P16
22	A16	P67	62	K17	P07B	102	T14	DA1
23	–	GND *1	63	K16	P01A	103	U14	P13
24	–	GND *1	64	K15	P00A	104	V14	PWDATA 7
25	A17	PE4A	65	L18	P06B	105	R13	P11
26	A18	V_{CC}	66	L17	P05B	106	T13	P12
27	B15	PE1A	67	L16	P04B	107	U13	SMODEX
28	B16	PE5A	68	L15	P03B	108	V13	PWDATA 3
29	B17	PE7A	69	M18	P02B	109	R12	PWDATA 5
30	B18	PE3B	70	M17	P00B	110	T12	PWDATA 6
31	C15	PE6A	71	M16	P46	111	U12	PWDATA 4
32	C16	Vss *1	72	M15	P47	112	V12	PRDATA 7
33	C17	PE2B	73	–	GND *1	113	R11	PWDATA 0
34	C18	PE7B	74	–	GND *1	114	T11	PWDATA 1
35	D15	PE1B	75	N18	P01B	115	U11	PWDATA 2
36	D16	PE0B	76	N17	P43	116	V11	PRDATA 6

Connector Pin Number	Evaluation MCU Pin Number	Signal Line Name	Connector Pin Number	Evaluation MCU Pin Number	Signal Line Name	Connector Pin Number	Evaluation MCU Pin Number	Signal Line Name
37	D17	PE6B	77	N16	P41	117	R10	PRDATA 3
38	D18	SEL2	78	N15	P42	118	T10	PRDATA 4
39	E15	PE5B	79	P18	P45	119	U10	PRDATA 5
40	E16	PE4B	80	P17	P37	120	V10	PRDATA 2

*1: About power supply pins (common to connectors A and B)
Disconnect the VDDF pin from Vcc.
Connect the Vss pin to GND.

*2: About NC pins (common to connectors A and B)
Leave all NC pins disconnected.

: 3.3V power supply pins

: GND power supply pins

Revision History

Document Revision History

Document Title: F^{2}MC-8FX Family, MCU Board for MB95FV100 MB2146-304, Operation Manual Document Number: 002-07492				
Revision	**ECN#**	**Issue Date**	**Origin of Change**	**Description of Change**
**	–	08/08/2007	HUAL	Initial release
*A	5305457	06/13/2016	HUAL	Migrated to Cypress format