F²MC-16L/16LX

Emulator
MB2147-01-E Operation Manual

Doc. # 002-07501 Rev. *B

Cypress Semiconductor
198 Champion Court
San Jose, CA 95134-1709

Phone (USA): 800.858.1810
Phone (Intnl): +1.408.943.2600
www.cypress.com

Copyrights

© Cypress Semiconductor Corporation, 2008-2017. This document is the property of Cypress Semiconductor Corporation and its subsidiaries, including Spansion LLC ("Cypress"). This document, including any software or firmware included or referenced in this document ("Software"), is owned by Cypress under the intellectual property laws and treaties of the United States and other countries worldwide. Cypress reserves all rights under such laws and treaties and does not, except as specifically stated in this paragraph, grant any license under its patents, copyrights, trademarks, or other intellectual property rights. If the Software is not accompanied by a license agreement and you do not otherwise have a written agreement with Cypress governing the use of the Software, then Cypress hereby grants you a personal, non-exclusive, nontransferable license (without the right to sublicense) (1) under its copyright rights in the Software (a) for Software provided in source code form, to modify and reproduce the Software solely for use with Cypress hardware products, only internally within your organization, and (b) to distribute the Software in binary code form externally to end users (either directly or indirectly through resellers and distributors), solely for use on Cypress hardware product units, and (2) under those claims of Cypress's patents that are infringed by the Software (as provided by Cypress, unmodified) to make, use, distribute, and import the Software solely for use with Cypress hardware products. Any other use, reproduction, modification, translation, or compilation of the Software is prohibited.

TO THE EXTENT PERMITTED BY APPLICABLE LAW, CYPRESS MAKES NO WARRANTY OF ANY KIND, EXPRESS OR IMPLIED, WITH REGARD TO THIS DOCUMENT OR ANY SOFTWARE OR ACCOMPANYING HARDWARE, INCLUDING, BUT NOT LIMITED TO, THE IMPLIED WARRANTIES OF MERCHANTABILITY AND FITNESS FOR A PARTICULAR PURPOSE. To the extent permitted by applicable law, Cypress reserves the right to make changes to this document without further notice. Cypress does not assume any liability arising out of the application or use of any product or circuit described in this document. Any information provided in this document, including any sample design information or programming code, is provided only for reference purposes. It is the responsibility of the user of this document to properly design, program, and test the functionality and safety of any application made of this information and any resulting product. Cypress products are not designed, intended, or authorized for use as critical components in systems designed or intended for the operation of weapons, weapons systems, nuclear installations, life-support devices or systems, other medical devices or systems (including resuscitation equipment and surgical implants), pollution control or hazardous substances management, or other uses where the failure of the device or system could cause personal injury, death, or property damage ("Unintended Uses"). A critical component is any component of a device or system whose failure to perform can be reasonably expected to cause the failure of the device or system, or to affect its safety or effectiveness. Cypress is not liable, in whole or in part, and you shall and hereby do release Cypress from any claim, damage, or other liability arising from or related to all Unintended Uses of Cypress products. You shall indemnify and hold Cypress harmless from and against all claims, costs, damages, and other liabilities, including claims for personal injury or death, arising from or related to any Unintended Uses of Cypress products.

Cypress, the Cypress logo, Spansion, the Spansion logo, and combinations thereof, WICED, PSoC, CapSense, EZ-USB, F-RAM, and Traveo are trademarks or registered trademarks of Cypress in the United States and other countries. For a more complete list of Cypress trademarks, visit cypress.com. Other names and brands may be claimed as property of their respective owners.

Preface

Thank you for purchasing the MCU board for the F^{2}MC*-16L/16LX emulator (MB2147-01-E).

The MB2147-01-E is a development support tool for performing evaluations of application products that use a Cypress F^{2}MC-16L/16LX microcontroller.

This manual is for engineers developing F^{2}MC-16L/16LX application products using the MB2147-01-E (referred to as "the emulator unit" in this manual), and describes the handling of the products and connection methods.

- Using the product safely

This manual contains important information required for using the MB2146-302A safely. Be sure to read through the manual before using the product and follow the instructions contained therein to use it correctly.

In particular, carefully read the “Caution of the products described in this document” at the beginning of this manual to understand the requirements for safe use of the product before using it.

- Related manuals

Refer to the following manuals for additional information:

- Evaluation MCU Hardware Manual.
- Adapter board operation Manual.
- Probe cable operation manual
- Probe header operation manual
- ““SOFTUNE Workbench Operation Manual”

- European RoHS compliance

Products with E-suffix on the part number are European RoHS compliance products.

- Notice on this document

All the Information included in thid document is current as of the date it is issued. Such information is subject to change without any prior notice.

Please confirm the latest releveant information with the sales representatives.

Contents

1. Product Handling and Specifications 6

1.1 Checking the Items Packaged 6
1.2 Appearance and Part Names 7
1.3 General Specifications 9
1.4 RS-232C Port Specifications 10
1.5 USB Port Specifications 11
1.6 LAN Port Specifications 11
1.7 External Trigger Input Terminal Specifications 12
1.7.1 External trigger input terminal specifications 12
1.7.2 Precautions on using the external trigger input terminal 12
1.8 Program Execution Output Terminal Specifications 13
1.9 Power-On Debug Specifications 14
1.9.1 Power-on debug specifications 14
1.9.2 Operational flow 14
1.9.3 Operation outline 15
1.10 Optional Parts 16

2. Connecting the Emulator 18

2.1 System Configuration 18
2.2 Connecting an Adapter Board 19
2.3 Connecting the User System 20
2.3.1 Connecting the user system 20
2.3.2 Connecting to the user system (using a probe cable) 20
2.3.3 Connecting to the user system (using flat cables and a probe header) 21
2.3.4 Connecting to the user system (using flat cables) 21
2.4 Connecting a Probe 22
2.4.1 Note on connecting a probe 22
2.4.2 Connecting a probe (using a probe cable) 22
2.4.3 Connecting a probe (using flat cables) 22
2.5 Connecting a Host Machine 23
2.6 Connecting Test Equipment 24
2.7 Connecting the AC Adapter 25

3. Operating the Emulator 26

3.1 Mounting an Evaluation MCU 26
3.2 Clock Supply 27
3.3 Emulator-dedicated Power Supply Switching 30
3.4 User Port Power Supply Switching 31
3.5 Switching the C Pin Setting 32
3.6 User Data Bus Switching 33
3.7 Using the Setting Switches 34
3.7.1 Functions of the setting switches 34

3.7.2 Using switches to change parameter values....35
3.7.3 Using switches for selection or confirmation....35
3.7.4 Display configuration....36
3.8 Power-On Sequence....37

Revision History **38**

1. Product Handling and Specifications

1.1 Checking the Items Packaged

Check that the package contains all of the following items before using the emulator unit.

- Emulator unit: 1
- AC adapter: 1
- AC cord*: 1
- Flat cable 1 (standard length): 2
- Flat cable 2 (long): 2
- Operation manuals (English version, this manual): 1
- Operation manuals (Japanese version): 1

*: The AC cord and AC adapter are packed in the same box.

1.2 Appearance and Part Names

The external appearance and component names of the emulator are shown in Figure 1-1 to Figure 1-3.

Figure 1-1. Top view of the emulator unit

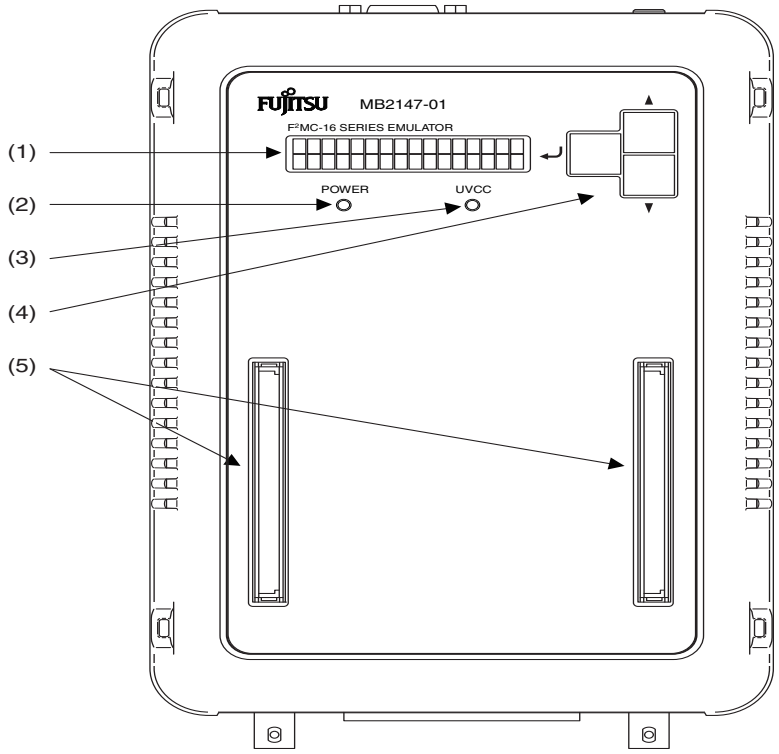

No.	Name	Description
(1)	Status indicator LCD*1	Displays different kinds of information, including setting values, communication status, and operating status.
(2)	POWER LED	Lights up when the emulator power is turned on.
(3)	UVCC LED*2	Lights up when the user system power (UV_{CC}) is turned on.
(4)	Setting switches*1	Used to change settings and the information displayed on the status indicator LCD.
(5)	Adapter board connector	Connects to each of the different kinds of adapter boards (which is sold separately).

*1 : For details on the type of information displayed on the status indicator LCD and how to use the setting switches, see Section 3.7 "Using the Setting Switches."

*2 : If the evaluation MCU has a dual source power supply, this LED lights up when both power supplies are turned on.

Figure 1-2. Front view of the emulator unit

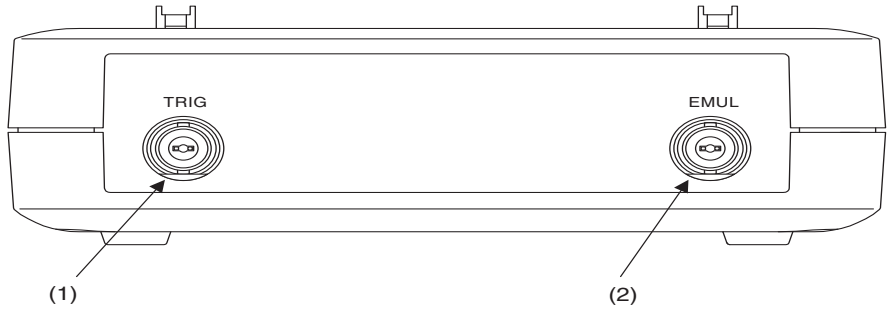

No.	Name	Description
(1)	TRIG terminal	External trigger input terminal.
(2)	EMUL terminal	Program execution output terminal.

Figure 1-3. Rear view of the emulator unit

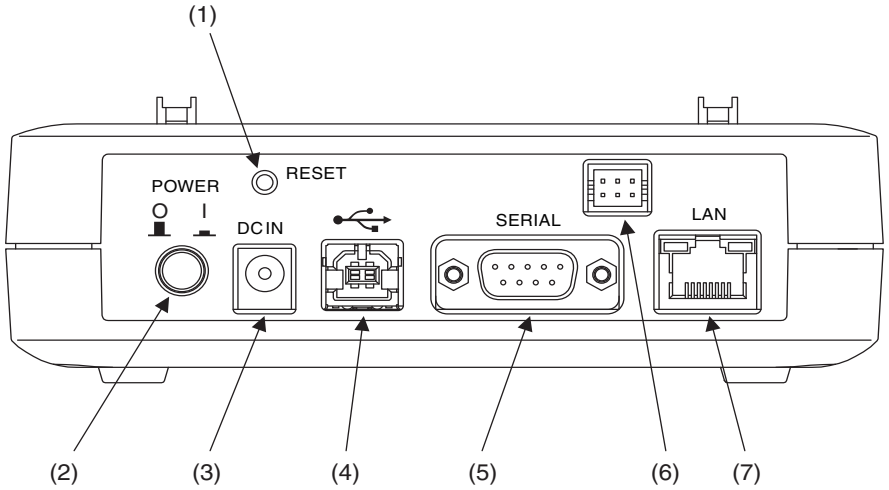

No.	Name	Description
(1)	RESET switch	Resets the emulator.
(2)	POWER switch	Turns on and off the emulator.
(3)	DC inlet	Connects to the AC adapter provided as an accessory.
(4)	USB connector	Connects to a USB cable.
(5)	RS-232C connector	Connects to an RS-232C cable.
(6)	TEST terminal	Connects to a cable used for product testing. Do not use this terminal.
(7)	LAN connector	Connects to a LAN cable.

1.3 General Specifications

Table 1 lists the general specifications of the emulator.

The following names used in this manual have the following definitions:

- Emulator: Emulator unit + adapter board
- Emulator system: Emulator unit + adapter board + probe

Table 1-1. General specifications

Item	Specification	
Name	F^2MC-16L/16LX Emulator	
Part number	MB2147-01-E	
Emulator power supply	Power supply input	+16 V 2.5 A (supplied using a special AC adapter)
Evaluation MCU power supply	Emulator interface power supply output	+3.3 V or +5.0 V (supplied from the emulator)
	User system power supply input	+1.8 V to +5.5 V*1 10 mA or less*2 (Dual source power supply supported: Supplied from the user system)
Operating frequency	High-speed I/F	8 kHz to 33 MHz*3
	Conventional interface	8 kHz to 20 MHz*3
Operating temperature Storage temperature	+5 to +35 degrees Celsius 0 to +70 degrees Celsius	
Operating humidity Storage humidity	30% to 80% (No condensation) 20% to 90% (No condensation)	
External dimensions	148 mm (W) × 210 mm (D) × 44 mm (H) (excluding protruding sections and rubber feet)	
Weight	700 g	

*1: The upper and lower voltage limits depend on the evaluation MCU used.
For details, contact the sales or support representative.

*2: Does not include the current consumed by the evaluation MCU.

*3: The upper and lower frequency limits depend on the evaluation MCU used. The upper and lower frequency limits may depend on the operating voltage, even if the same evaluation MCU is used.
For details, contact the sales or support representative.

1.4 RS-232C Port Specifications

The emulator includes an RS-232C port.

The RS-232C port specifications are shown in Table 2 and the pin assignment of the RS-232C connector is shown in Figure 1-4.

See Section 1.10 Optional Parts for details on the RS-232C cable wiring.

Table 1-2. RS-232C port specifications

Item	Description
Connector shape	D-sub 9-pin (male)
Signal definition	DTE (same as the signal definition for personal computers)
Baud rate*	9600bps, 19.2kbps, 115.2kbps
Data bit length	8 bits
Start bit length	1 bit
Stop bit length	1 bit
Parity bit	None
X control	None

*: Baud rates depend on the emulator debugger specifications.
For details, see the S_{OFTUNE} Workbench Operation Manual.

Figure 1-4. Pin assignment of the RS-232C connector

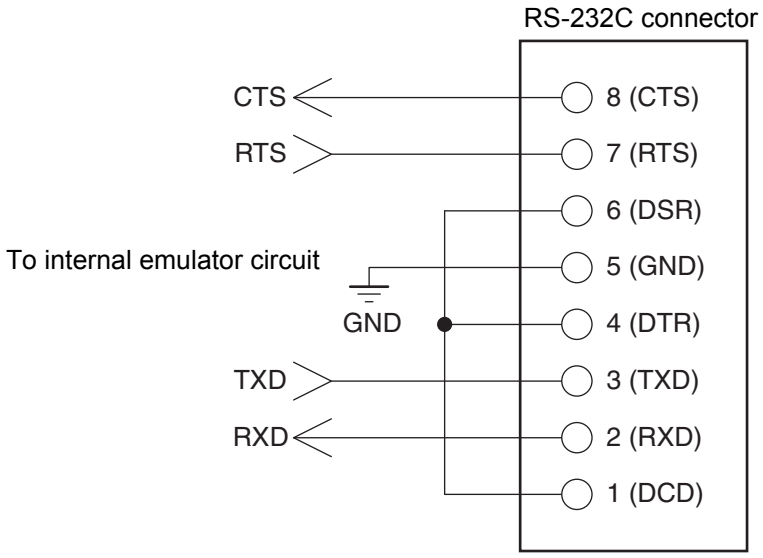

Note: The emulator does not use any pins other than those shown above.

1.5 USB Port Specifications

The emulator includes a USB port.

Table 1-3 lists the USB port specifications.

Table 1-3. USB port specifications

Item	Description
Standard compliance	USB 1.1
Communication mode	Full Speed Bulk Transfer
Data transfer rate	12 Mbps
Connector shape	Series B
Power supply	Self Powered

1.6 LAN Port Specifications

The emulator includes a LAN port.

Table 1-4 lists the LAN port specifications.

Table 1-4. Table 4 LAN port specifications

Item	Description
Standard compliance	IEEE 802.3
Communication mode	TCP/IP
Data transfer rate	10 Mbps/100 Mbps
Connector shape	Series B
IP address	Variable
Port address	Variable
Ethernet address	Global: Fixed address (registered in IEEE) Local: Variable address

1.7 External Trigger Input Terminal Specifications

The emulator provides a TRIG terminal for input of external trigger signals.

1.7.1 External trigger input terminal specifications

The external trigger input is a mechanism for connecting an external device such as a logic analyzer to the emulator in order for the external device to request the evaluation MCU in the emulator to break (external trigger break function).

The external trigger input terminal specifications are shown in Table 1-5 and the corresponding peripheral circuit configuration is shown in Figure 1-5.

Table 1-5. External trigger input terminal specifications

Terminal name	Input or output	Description
TRIG	Input	Used to input external trigger signals. This terminal is used for break function control. The signal activation can be selected from L to H transition activation or H to L transition activation. A break occurs when the selected activation signal input is detected.

Figure 1-5. Configuration of the peripheral circuit for the external trigger input terminal

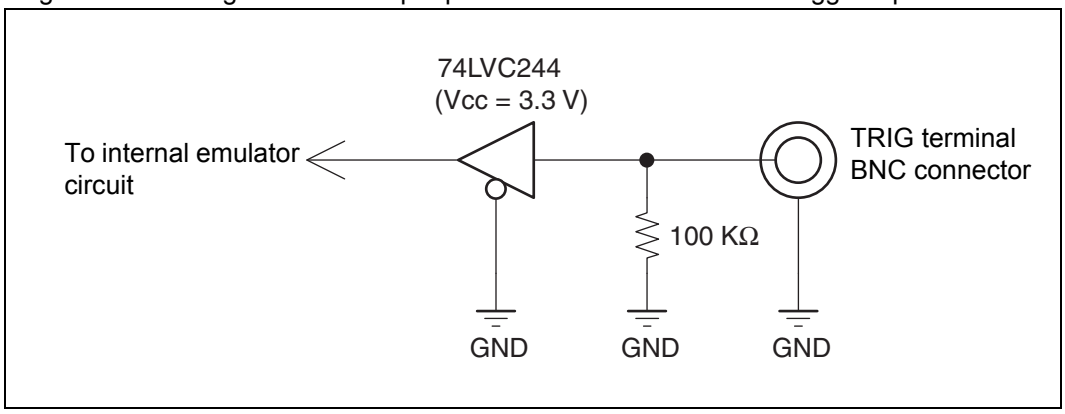

1.7.2 Precautions on using the external trigger input terminal

Before using the external trigger function, be sure to understand the break slip characteristics as described below.

- Break slip

A trigger signal input via the external trigger input terminal is encoded in the emulator internal circuit into the emulator interface command code. The signal is then transmitted to the evaluation MCU in the emulator system. The emulator interface has lower clock frequency than that of the evaluation MCU (the ratio between the clock frequencies depends on the model of evaluation MCU). Therefore, a relatively large break slip (several tens to several hundreds of machine clock cycles) occurs between trigger signal input and the associated break operation of the evaluation MCU.

1.8 Program Execution Output Terminal Specifications

The emulator provides an EMUL terminal that outputs program execution signals.

The program execution signal is output continuously while a user program is being executed.

The program execution output terminal specifications are shown inTable 1-6 and the corresponding peripheral circuit configuration is shown in Figure 1-6.

Table 1-6. Program execution output terminal specifications

Terminal name	Input or output	Description
EMUL	Output	Outputs the user program execution signal An H level signal is output continuously while a user program is being executed.

Figure 1-6. Configuration of the peripheral circuit for the program execution output terminal

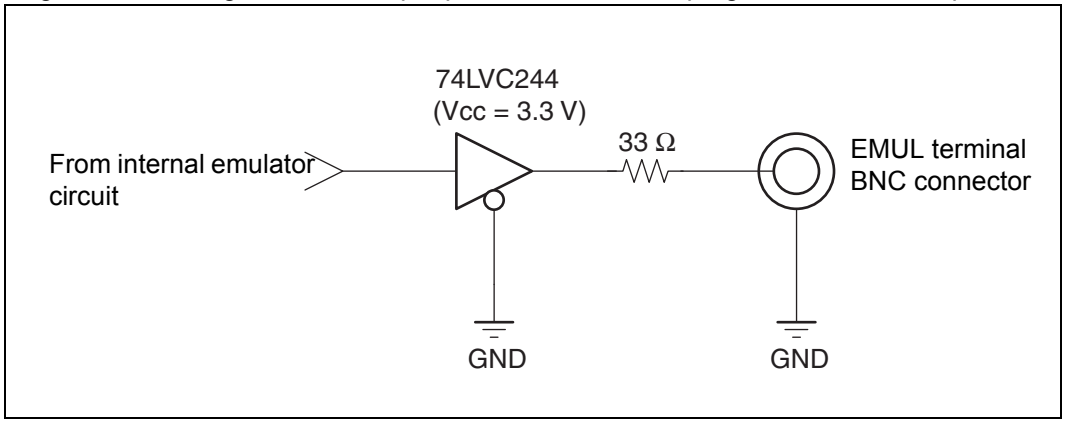

1.9 Power-On Debug Specifications

The emulator provides a power-on debug function that executes a program immediately after power is turned on to the evaluation MCU.

1.9.1 Power-on debug specifications

The power-on debug function*1 verifies the processing of an executed program immediately after the power-on sequence by using the PLEV pin*2 of the evaluation MCU.

This function must be configured before it can be used.

For details on configuring this function, see the S_{OFTUNE} Workbench Operation Manual.

*1: The power-on debug function is enabled if supported by the evaluation MCU.
Contact the sales or support representative before using this function.

*2: The name of the PLEV pin may vary depending on the model of evaluation MCU to be used.
Contact the sales or support representative before using this function.

1.9.2 Operational flow

Figure 1-7 shows the flow of the power-on debug operation.

Figure 1-7. Flow of the power-on debug operation

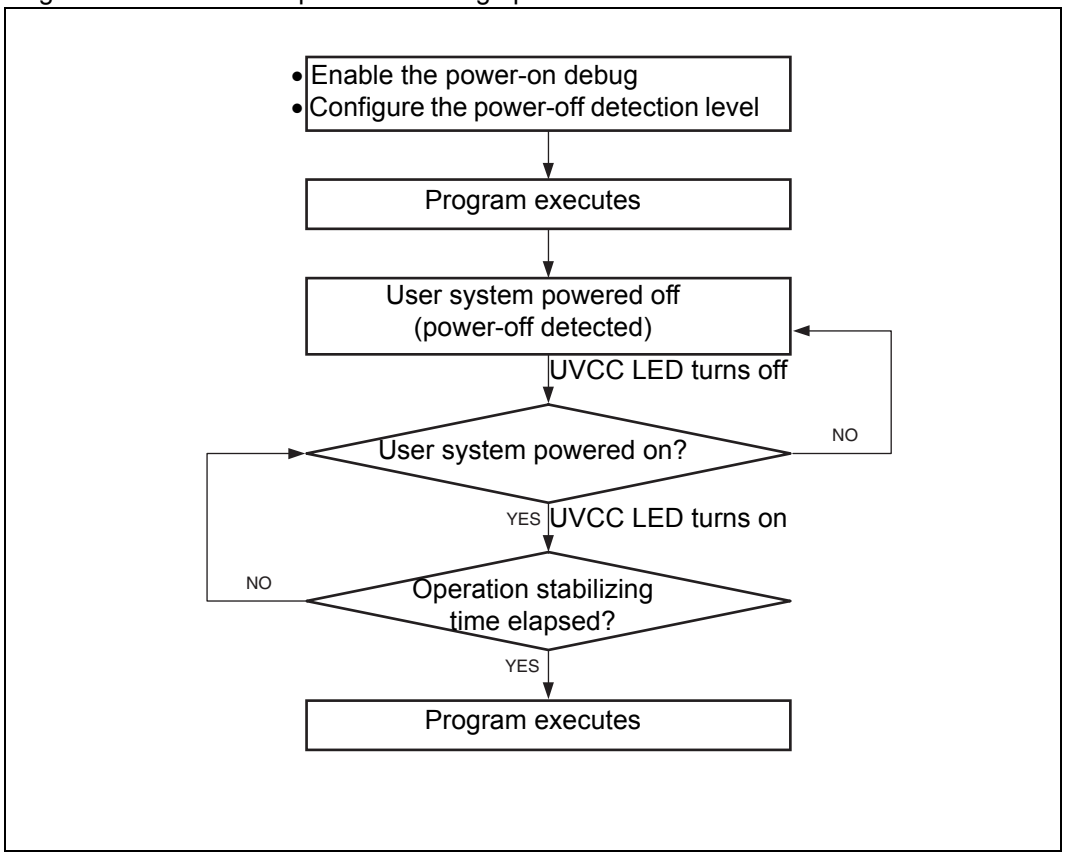

1.9.3 Operation outline

Figure 8 shows a timing chart of the power-on debug operation.

- Operation timing
- Detection of power-off:

  Power-off status of the user system power supply voltage (UV_{CC}) is detected.

  When the user power supply voltage becomes less than or equal to the power-off detection level, the emulator outputs an L-level signal to the PLEV pin of the evaluation MCU to stop the operation of the evaluation MCU (See (1) in Figure 1-8).
- Detection of power-on:

  Power-on status of the user system power supply voltage (UV_{CC}) is detected.

  The function checks that a voltage higher than the power-off detection level is held for the operation stabilization time (about 2 ms) of the evaluation MCU after the voltage is detected as being higher than the power-off detection level (See (2) in Figure 1-8).

  After the operation stabilization time, the emulator outputs an H-level signal to the PLEV pin of the evaluation MCU and releases the user reset input for program execution (See (3) in Figure 1-8).

Figure 1-8. Timing chart of the power-on debug operation

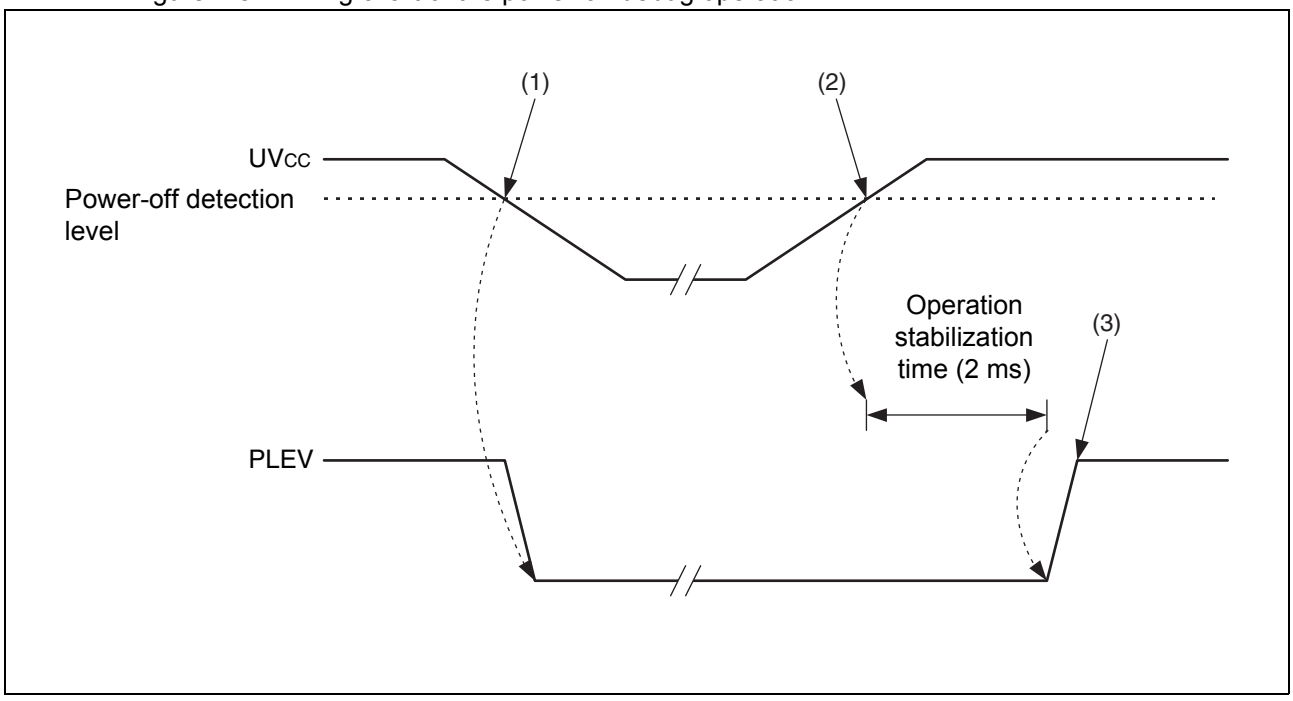

Note:

The characteristics of the user power supply (UV_{CC}) must be taken into consideration when setting the power-off detection level values.
In general, when using the power-on debug function, set the voltage to approximately 5% higher than the minimum guaranteed operating voltage of the evaluation MCU, and when not using the power-on debug function, set the voltage to the minimum guaranteed operating voltage of the evaluation MCU. While the PLEV pin level is low, the emulator functions (trace, event, and other) are disabled because the evaluation MCU breaks the connection with the emulator in order to prevent the emulator from malfunctioning.

1.10 Optional Parts

A variety of optional parts are available for the emulator. Purchase optional parts separately as necessary.

The emulator unit cannot be used independently. Purchase the optional parts listed in Table 1-7 as required to build an emulator system that is suitable for the evaluation MCU to be used.

Table 1-7. Optional parts

Name	Part number
Evaluation MCU*1	MB90Vxxx
Adapter board*2	MB2147-xx-E
Probe cable*3	MB2132-xxx
Probe header*3	MB2147-xxx-E
RS-232C cable*4 *5	-
USB cable*4	-
LAN cable*4	-
BNC cable*6	-

*1: The part numbers differ depending on the evaluation MCU to be used. For details, contact the sales or support representative.

*2: The adapter board is an interface board that connects the user system to the emulator unit.
Purchase an adapter board that is compatible with the evaluation MCU to be used. Contact the sales or support representative for details on how to select a suitable adapter board.
See the adapter board operation manual for details on how to handle and use the adapter board, and for related safety precautions.

*3: The probe cable is an FPC cable that connects the user system to the emulator.
The probe header is a board that uses a flat cable to connect the user system to the emulator.
Purchase a probe cable and header that are compatible with package of the mass production MCU to be used. Contact the sales or support representative for details on how to select a suitable probe cable and probe header.
See the probe cable operation manual and probe header operation manual for details on how to handle and use a probe cable and probe header, and for related safety precautions.

*4: Use an RS-232C, USB, or LAN cable for the communication interface. Provide a cable that is compatible with both the emulator and the host machine to be used.

*5: The RS-232C cable provided should be a crossover (interlink) cable.
Figure 9 shows the interlink cable wiring.

*6: A BNC cable is required only if the TRIG or EMUL terminal of the emulator is used.
In a BNC cable is required, use a cable with an impedance of 50 ohms and a maximum length of 2 meters.
Use a BNC cable that is compatible with both the emulator and the device connected to the emulator.

Figure 1-9. Interlink cable wiring

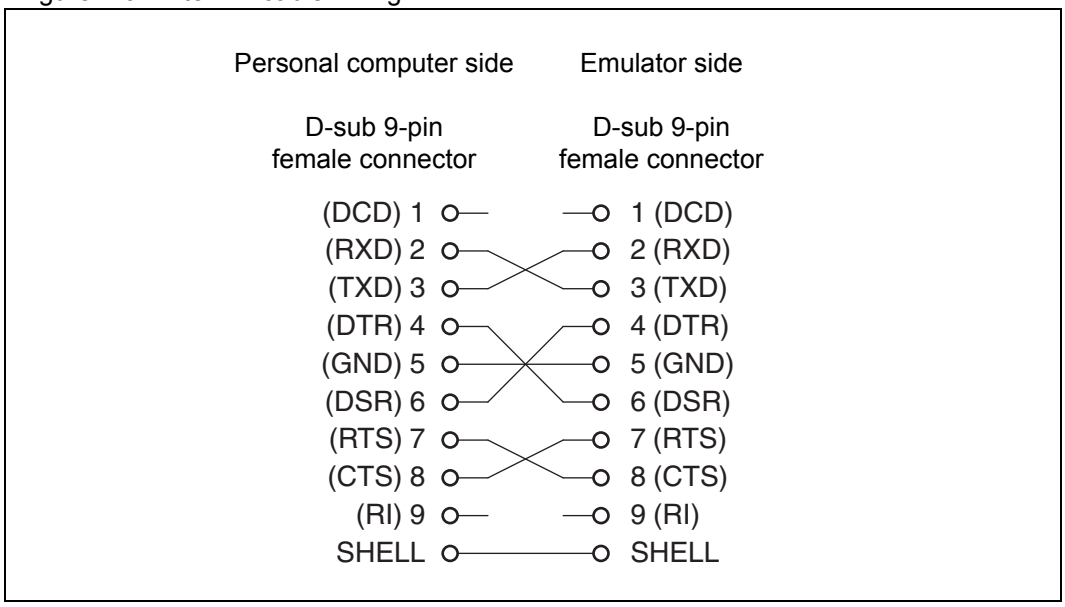

2. Connecting the Emulator

2.1 System Configuration

The emulator is designed to be connected to and controlled by a host machine. The host machine uses emulator debugger software to control the emulator. See the S_{OFTUNE} Workbench Operation Manual for details on how to use the software.

Figure 2-1 shows the emulator system configuration.

Figure 2-1. System configuration

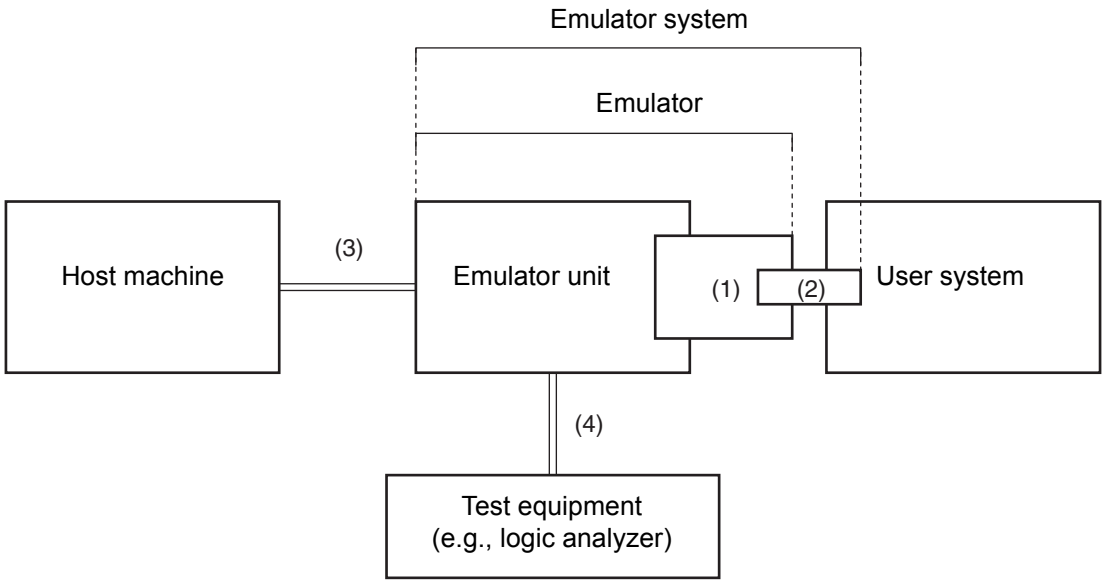

(1) Adapter board*
(2) Probe
Probe cable*, flat cable, or
flat cable + probe header*
(3) RS-232C cable*, USB cable*[1] or LAN cable*
(4) BNC cable*

* : Need to be provided separately

2.2 Connecting an Adapter Board

Connect the adapter board (which is sold separately) into the adapter board connector at the top of the emulator unit, as shown in Figure 2-2.

Figure 2-2. Connecting the adapter board

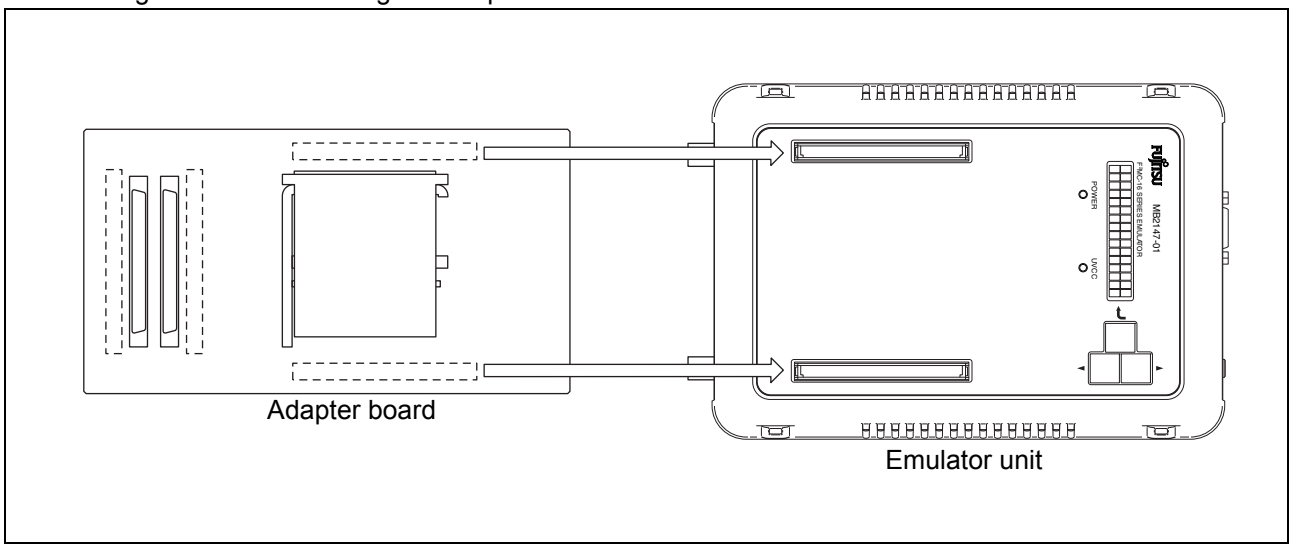

2.3 Connecting the User System

Connect a probe to the user system.

2.3.1 Connecting the user system

Connect a probe to the user system.

The method for connecting the probe to the user system depends on the probe configuration. Table 2-1 shows the probe configurations.

Table 2-1. Probe configurations

Cable used	Probe configuration	Connection to user system
Probe cable	Probe cable	Insert the connector* of the probe cable header into the appropriate connector* of the user system.
Flat cable	Flat cable and probe header	Insert the connector* of the probe header into the appropriate connector* of the user system.
	Flat cable	Connect the connector of the flat cable to the connector of the user system.

*: The shape of the header connector depends on the model of header.
Example: IC socket and NQPACK connector

Note:

Before connecting the adapter board to the user system using a probe, remove the mass production MCU from the user system.

2.3.2 Connecting to the user system (using a probe cable)

Connect a probe cable that is compatible with the package of the mass production MCU to be used to the connector on the user system, as shown in Figure 2-3.

See the probe cable operation manual for details on how to connect the connector on the header end of the probe cable.

Figure 2-3. Connecting to the user system (using a probe cable)

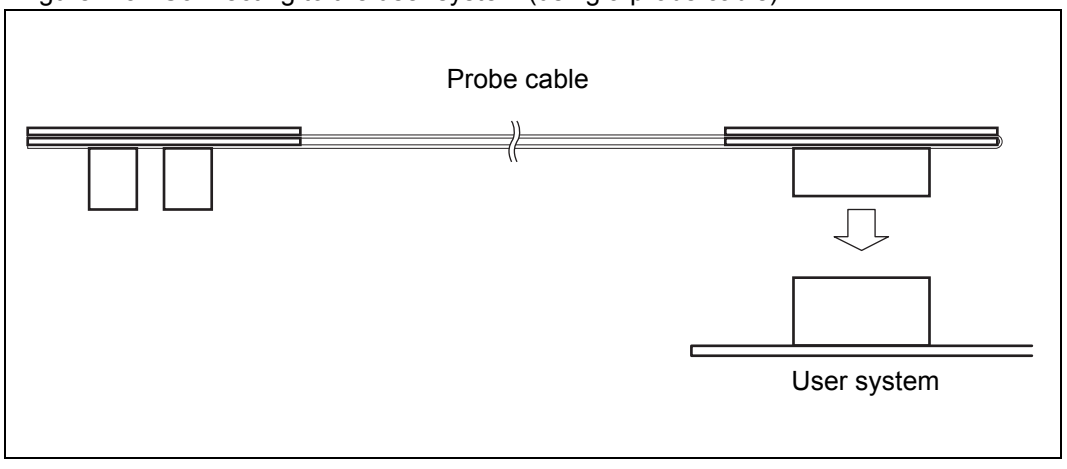

2.3.3 Connecting to the user system (using flat cables and a probe header)

Connect the probe header that corresponds to the package of the mass production MCU to be used to the connector on the user system, as shown in Figure 2-4.

See the probe header operation manual for details on how to connect the connector on the header end of the probe header.

Figure 2-4. Connecting to the user system (using flat cables and a probe header)

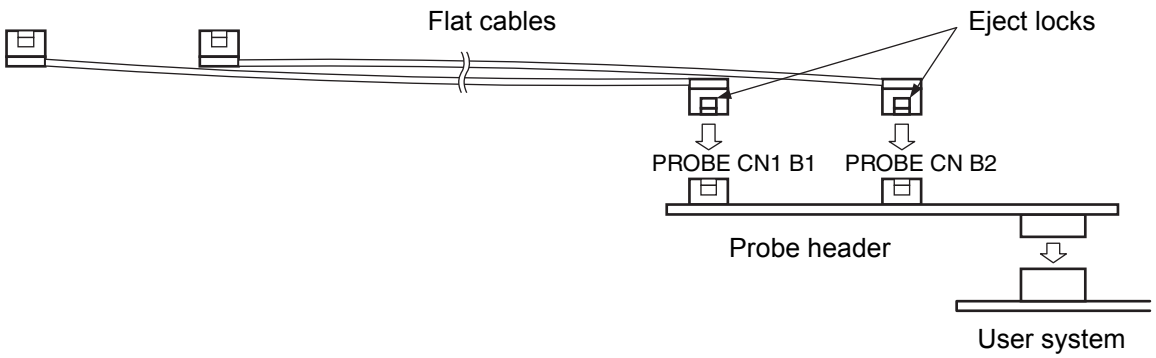

To connect a flat cable, push the cable connector into the connector on the probe header until the eject locks on both sides of the flat cable connector lock.
To disconnect a flat cable, pinch the eject locks on both sides of the flat cable connector until the flat cable unlocks, and pull out the connector.

2.3.4 Connecting to the user system (using flat cables)

If connectors that suit probe connectors B1 and B2 of the adapter board are mounted on the user system, the user system can be connected to the adapter board via flat cables. For the interface specifications of probe connector B1 and B2, see the adapter board operation manual.

Connect flat cables to the probe connector B1 and B2 on the user system, as shown in Figure 2-5

Figure 2-5. Connecting to the user system (using flat cables)

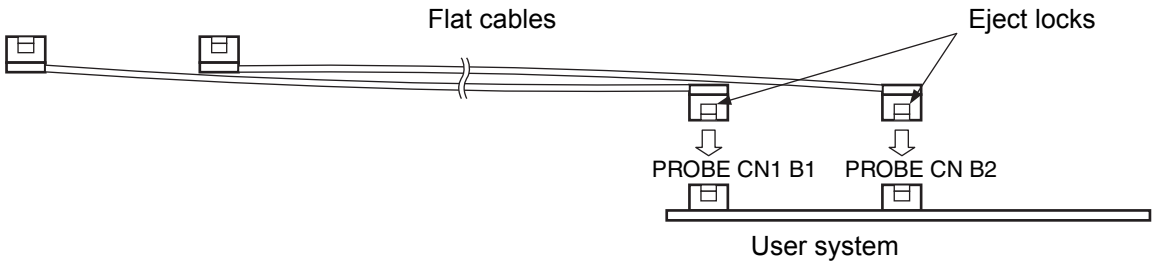

To connect a flat cable, push the cable connector into probe connector B1 or B2 until the eject locks on both sides of the flat cable connector lock.
To disconnect a flat cable, pinch the eject locks on both sides of the flat cable connector until the flat cable unlocks, and pull out the connector.

2.4 Connecting a Probe

Connect a probe to the adapter board.

2.4.1 Note on connecting a probe

The adapter board has two pairs of probe connectors. Do not use both pairs at the same time. Use only one of these pairs according to the configuration of the probe used.

2.4.2 Connecting a probe (using a probe cable)

Connect a probe cable to probe connectors A1 and A2 on the adapter board, as shown in Figure 2-6.

Figure 2-6. Connecting a probe (using a probe cable)

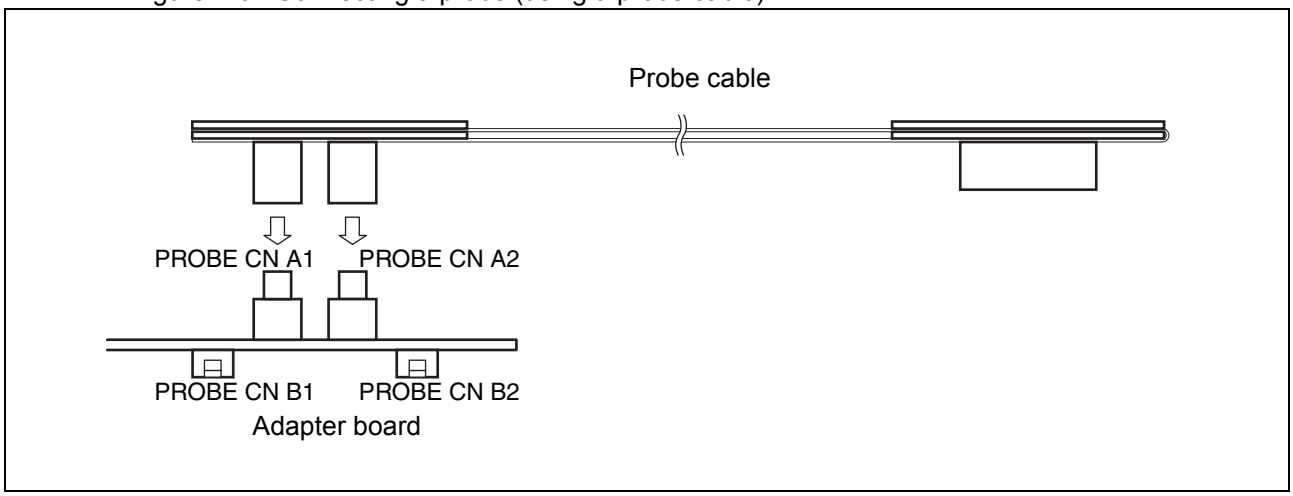

2.4.3 Connecting a probe (using flat cables)

Connect flat cables to probe connectors B1 and B2 on the adapter board, as shown in Figure 2-7.

Figure 2-7. Connecting a probe (using flat cables)

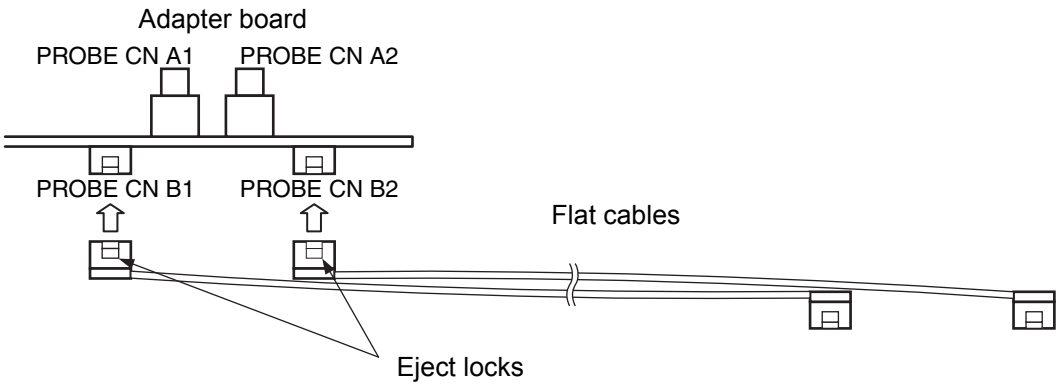

To connect a flat cable, push the cable connector into probe connector B1 or B2 until the eject locks on both sides of the flat cable connector lock.
To disconnect a flat cable, pinch the eject locks on both sides of the flat cable connector until the flat cable unlocks, and pull out the connector.

2.5 Connecting a Host Machine

Connect the host machine to the emulator using an RS-232C, USB, or LAN cable, as shown in Figure 2-8.

To make a Plug & Play connection to the host machine using a USB cable, power on all relevant equipment, and then insert the USB cable plug for the host machine into the appropriate host machine socket.

Figure 2-8. Connecting a host machine

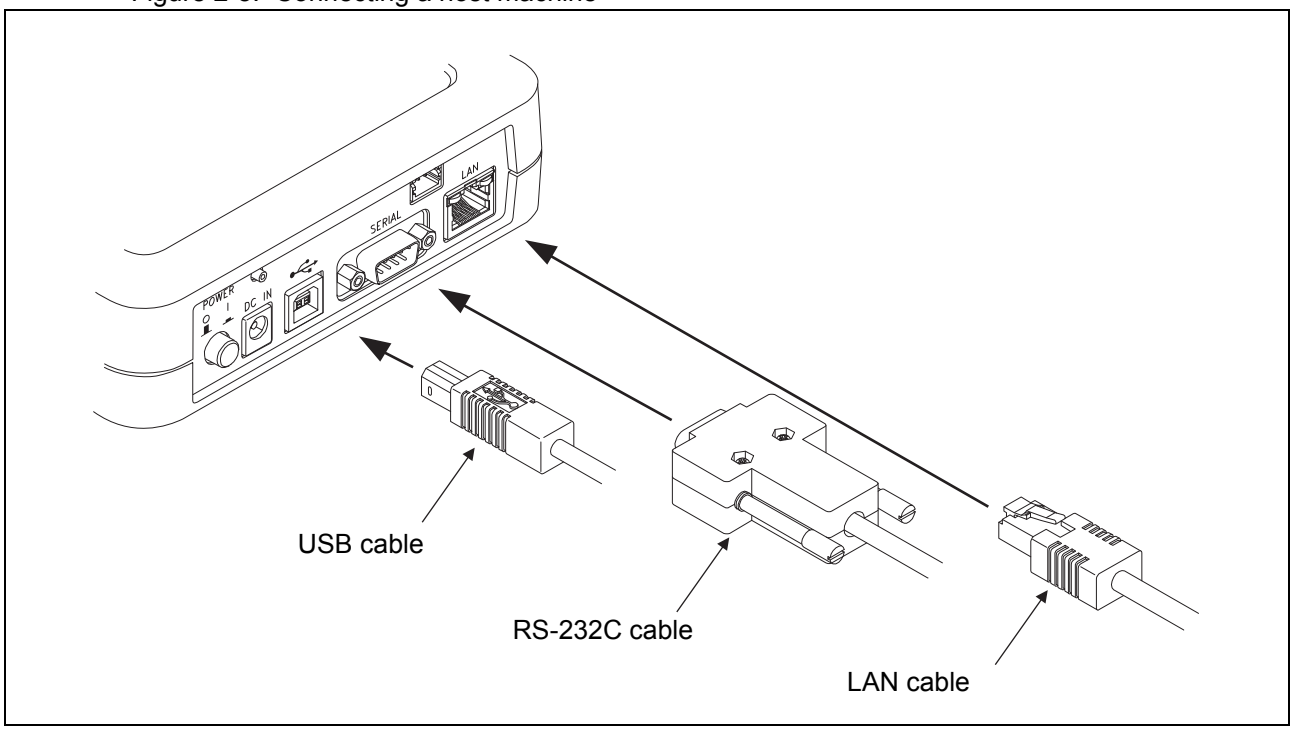

Note:

Connect only one RS-232C, USB, or LAN cable between the host machine and the emulator. Connecting multiple communication cables may result in abnormal operation.

2.6 Connecting Test Equipment

Connect test equipment to the emulator, as shown in Figure 2-9, only if the external trigger input and program execution functions of the emulator are to be used. If these functions are not used, do not connect the TRIG and EMUL terminals.

Figure 2-9. Connecting test equipment

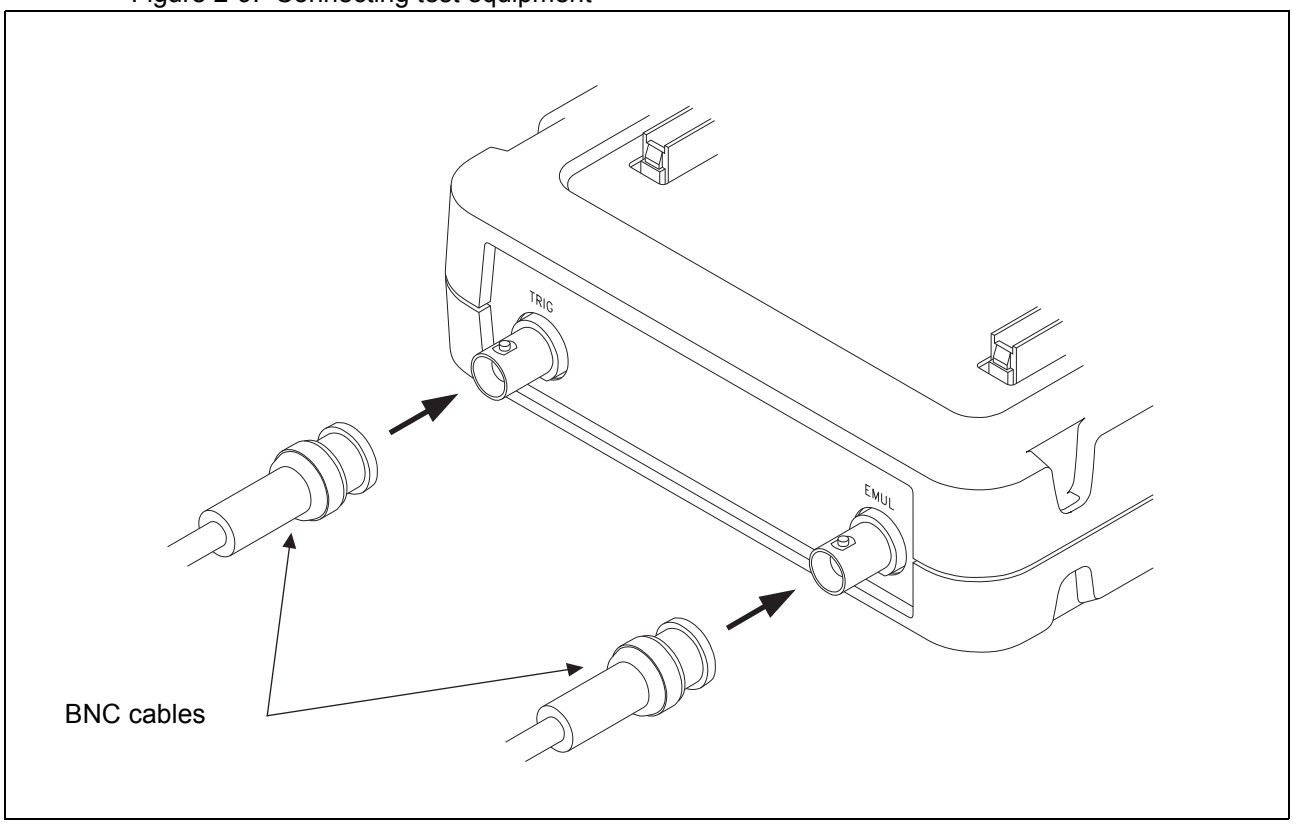

2.7 Connecting the AC Adapter

Connect the AC adapter to the emulator, as shown in Figure 2-10.

First, insert the AC cord into the AC adapter. Next, connect the AC adapter to the emulator. Finally, insert the AC plug into an AC outlet.

Figure 2-10. Connecting the AC adapter

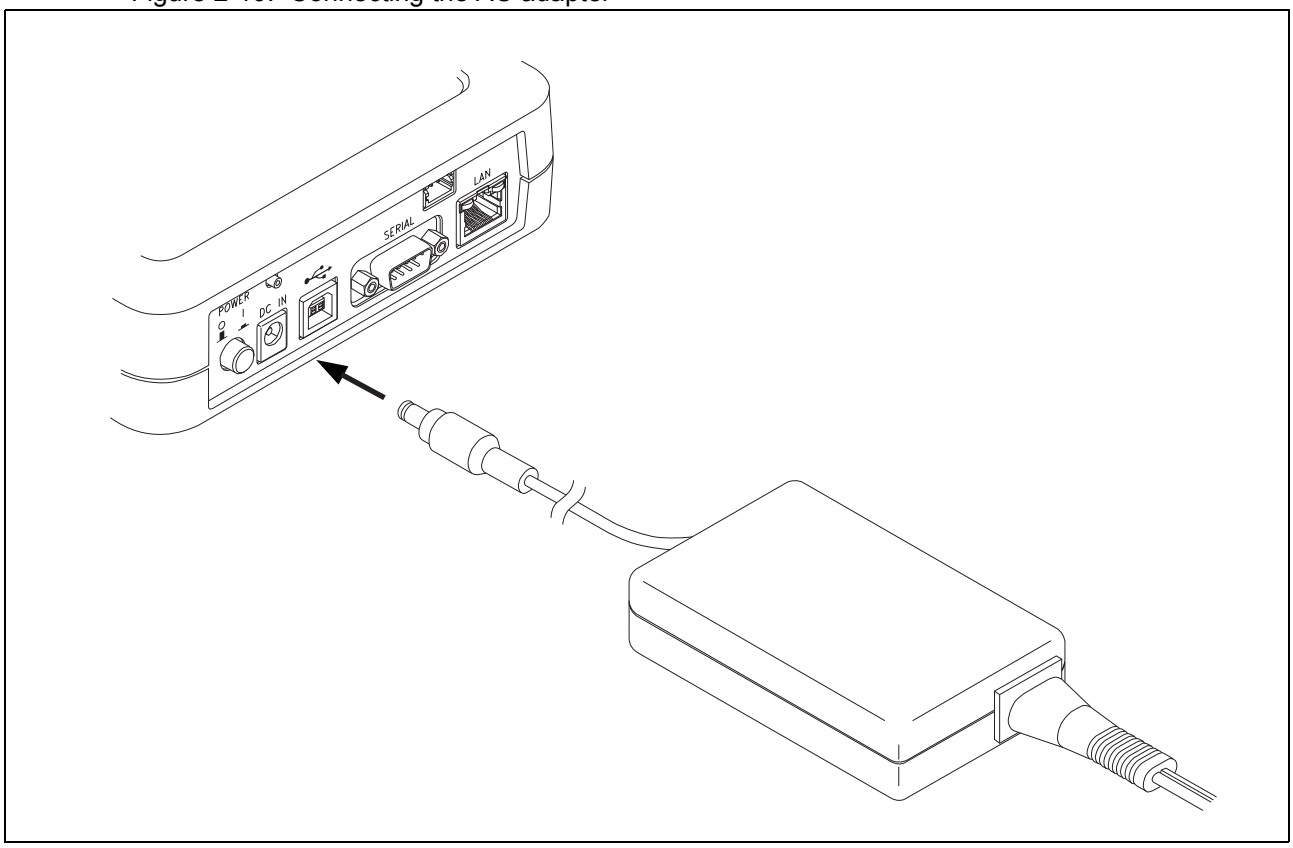

3. Operating the Emulator

3.1 Mounting an Evaluation MCU

Mount an evaluation MCU on the emulator.

Lift up the lever of the IC socket for mounting an evaluation MCU on the emulator, and mount the evaluation MCU while aligning the pin No. 1 index mark (□ or ○) of the evaluation MCU with that (△) of the IC socket.

After mounting the evaluation MCU, push the lever of the IC socket back to its original position.

Figure 3-1. Mounting an evaluation MCU

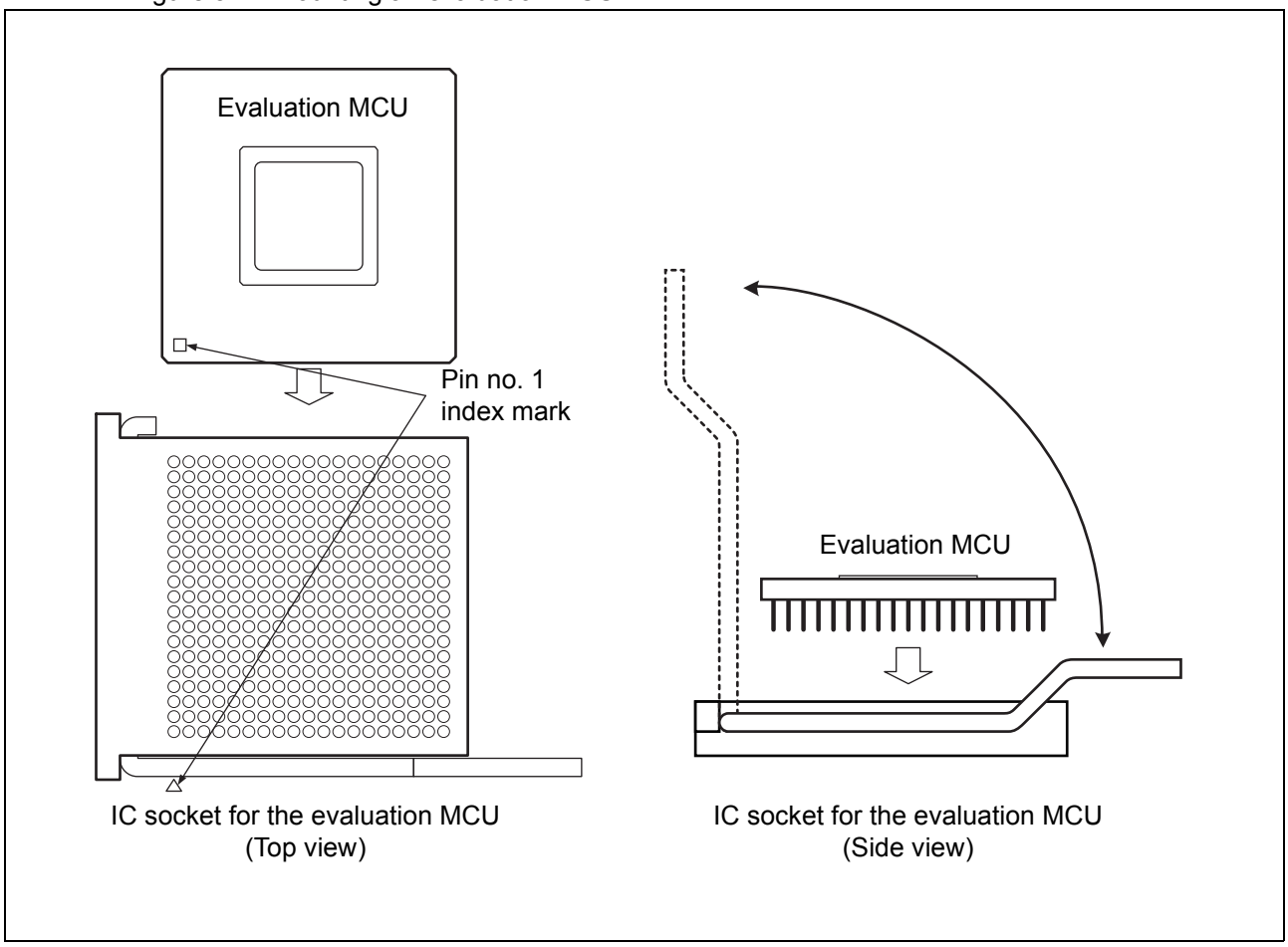

3.2 Clock Supply

Clock signals are supplied to the evaluation MCU.

The method of mounting a crystal oscillator in the IC sockets for crystal oscillators on the emulator is shown in Figure 3-2, the configuration of the peripheral circuits for the clock circuit is shown Figure 3-3, the examples of jumper settings for subclock selection are shown in Figure 3-4, the main clock selection switch settings are shown in Table 10, and the subclock selection switch settings are shown in Table 3-1.

Figure 3-2. Mounting a crystal oscillator

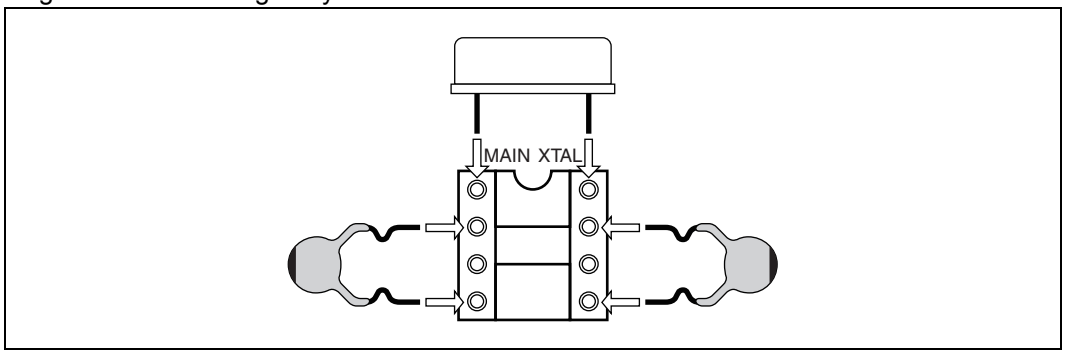

Note:

For a capacitor that is mounted with the oscillator, use a capacitor about 10pF smaller than the recommended value of the oscillator. When a capacitor of the recommended value of the oscillator is mounted, an oscillator stabilization time becomes longer than the standard time due to the parasitic capacitance of a socket and the influence of an interconnect load and that may cause a failure such as instability of clock switching operation etc.

Figure 3-3. Configuration of peripheral circuits for the clock circuit

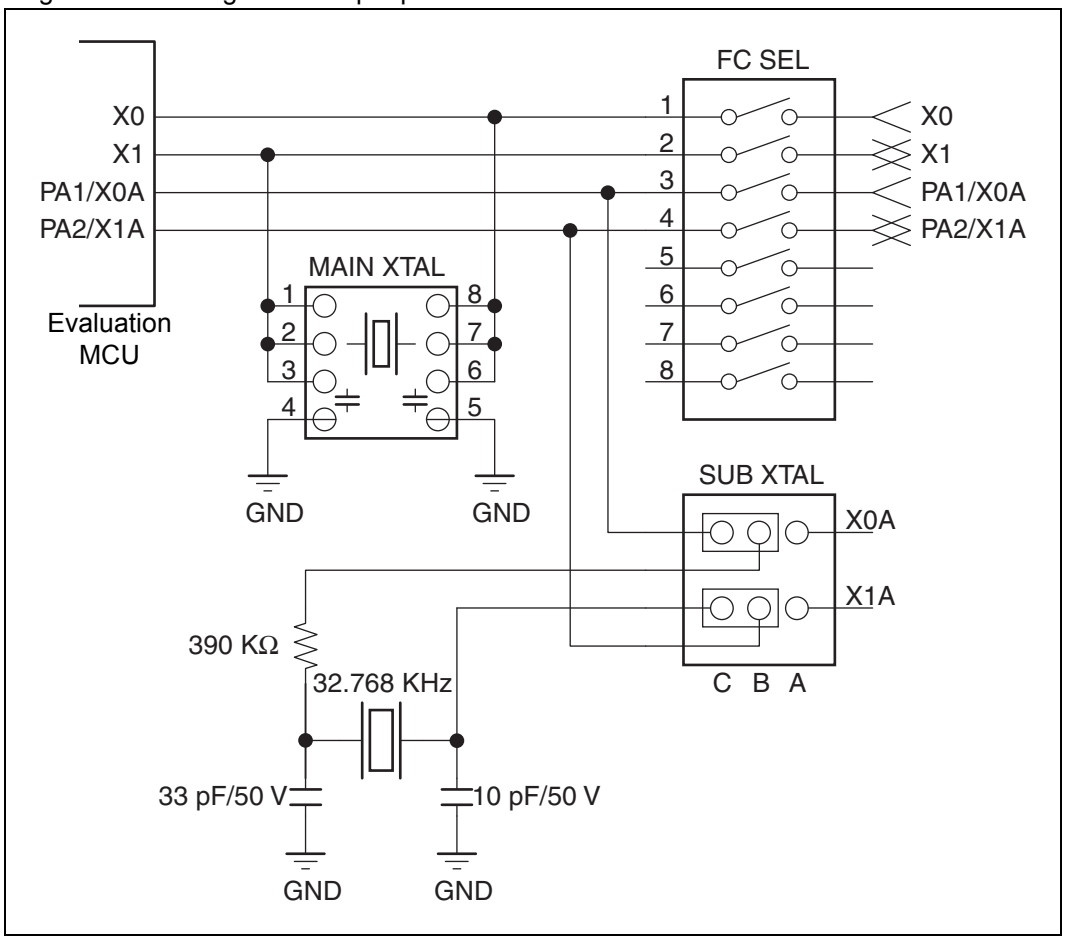

Figure 3-4. Examples of jumper settings for subclock selection

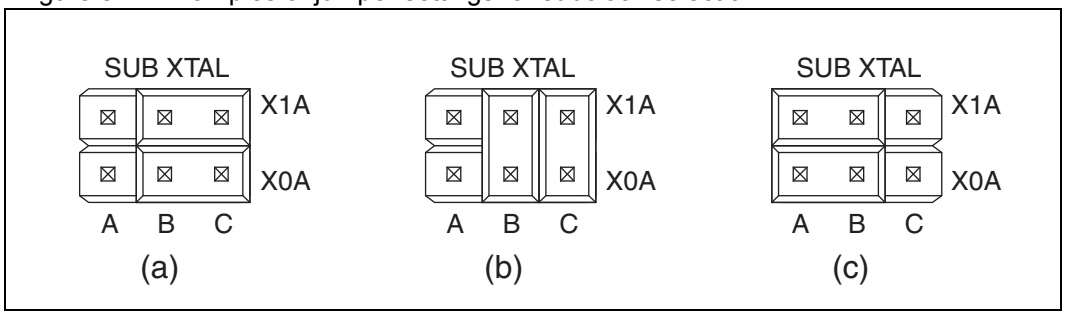

Table 3-1. Settings for main clock selection

Main clock source	FC SEL setting	
	1	2
Clock area	OFF	OFF
User system	ON	ON

Table 3-2. Settings for subclock selection

Sub clock				FC SEL setting		SUB XTAL setting	
Availability	Source*1	Pin corresponding to the evaluation MCU*2		3	4		
Available	Clock area	PGA 299	X1A: Pin No. 267 X0A: Pin No. 217	OFF	OFF	X1A:B - X1A: C short-circuited (a) in Figure 23	X0A:B - X0A: C short-circuited (a) in Figure 23
			X1A: Pin No. 217 X0A: Pin No. 267	OFF	OFF	X1A:B - X0A: B short-circuited (b) in Figure 23	X1A:C - X0A: C short-circuited (b) in Figure 23
		PGA 256	X1A: Pin No. 51 X0A: Pin No. 176	OFF	OFF	X1A:B - X1A: C short-circuited (a) in Figure 23	X0A:B - X0A: C short-circuited (a) in Figure 23
			X1A: Pin No. 176 X0A: Pin No. 51	OFF	OFF	X1A:B - X0A: B short-circuited (b) in Figure 23	X1A:C - X0A: C short-circuited (b) in Figure 23
Not available				ON	ON	X1A:A - X1A: B short-ciruited (c) in Figure 23	X0A:A - X0A: B short-circuited (c) in Figure 23

*1: Clock generation from the crystal oscillator mounted on the user system is not supported.

*2: In the table, PGA299 and PGA256 indicate different adapter boards, which are:
PGA299: Adapter board for the PGA-299P
PGA256: Adapter board for the PGA-256P
The correspondence between subclock signals (X0A and X1A) and pin numbers on the evaluation MCU depends on the evaluation MCU used. Check the correspondence before making settings.
Contact the sales or support representative for details on the correspondence between subclock signals and pin numbers on the evaluation MCU.

Note:

To supply the main clock signal from the user system, add an oscillation circuit to the user system and have the main clock supplied via a CMOS buffer.

3.3 Emulator-dedicated Power Supply Switching

Settings of the emulator-dedicated power supply are configured according to whether the emulator-dedicated power supply on the evaluation MCU is available.

Using the emulator-dedicated power supply switching jumper on the emulator, set the tool interface power supply on the evaluation MCU to operate with the user power supply ($UV_{CC}1$) or the development tool power supply (+5 V).

On an evaluation MCU that has an emulator-dedicated power supply, the development tool power supply must supply power to the evaluation MCU as the tool interface power supply.

Select the development tool power supply (+5 V) on evaluation MCUs that have an emulator-dedicated power supply, and select the user power supply ($UV_{CC}1$) on evaluation MCUs that do not have an emulator-dedicated power supply.

For details about an evaluation MCU with a emulator-dedicated power supply, see the Evaluation MCU Hardware Manual of the relevant product, or contact the sales or support representative.

The emulator-dedicated power supply switching jumper is shown in Figure 3-5 and the settings of the jumper are shown in Table 3-3.

Figure 3-5. Emulator-dedicated power supply switching jumper

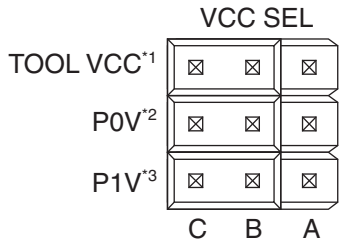

*1: Emulator-dedicated power supply switching jumper
*2: Power supply switching jumper of user port 0 (For details, see Section 3.4 "User Port Power Supply Switching.")
*3: Power supply switching jumper of user port 1 (For details, see Section 3.4 "User Port Power Supply Switching.")

Table 3-3. Settings of the emulator-dedicated power supply switching jumper

Emulator-dedicated power supply pin	Setting of VCC SEL (S1)
Available	TOOL VCC: B-C short-circuited (+5 V)
Not available	TOOL VCC: A-B short-circuited ($UV_{CC}1$)

3.4 User Port Power Supply Switching

Settings of the user port power supply for the evaluation MCU are configured.

On the emulator, use the jumper for switching the user port power supply to set the reference voltage of the user data bus probing circuit.

The user data bus for which the reference voltage is set corresponds to user ports 0 and 1. Set the user port reference voltage for each port power supply source.

For details on the user data bus probing circuit, see Section 3.6 "User Data Bus Switching."

$UV_{CC}1$: Main power supply for the evaluation MCU

$UV_{CC}2$: Secondary power supply for the evaluation MCU

Table 13 lists settings of the jumper for switching the user port power supply.

Table 3-4. Settings of the jumper for switching the user port power supply

User system power supply source	**V_{CC} SEL setting**			
	Jumper for switching user port 0 power supply (P0V)*1		**Jumper for switching user port 1 power supply (P1V)*1**	
Single source	A-B short-circuited ($UV_{CC}1$)		A-B short-circuited ($UV_{CC}1$)	
Dual source	Jumper connection on target power supply side*2		Jumper connection on target power supply side*2	
	A-B short-circuited ($UV_{CC}1$)	B-C short-circuited ($UV_{CC}2$)	A-B short-circuited ($UV_{CC}1$)	B-C short-circuited ($UV_{CC}2$)

*1: See Figure 24 for positions of the jumper for switching the user port power supply.

*2: Set a jumper connection to select the V_{CC} that corresponds to a user port power supply.

Example: User port 0 power supply is $UV_{CC}1$, and user port 1 power supply is $UV_{CC}2$:

Jumper for switching user port 0 power supply (P0V): A-B short-circuited ($UV_{CC}1$).

Jumper for switching user port 1 power supply (P1V): B-C short-circuited ($UV_{CC}2$).

3.5 Switching the C Pin Setting

Settings of the C-pin selection switch are configured according to whether the evaluation MCU has the C-pin.

On the emulator, use the C-pin selection switch to set the C-pin setting.

The configuration of the peripheral circuit for the C-pin selection switch is shown in Figure 3-6 and the switch settings are shown in Table 3-5.

Figure 3-6. Configuration of the peripheral circuit for C-pin selection switch

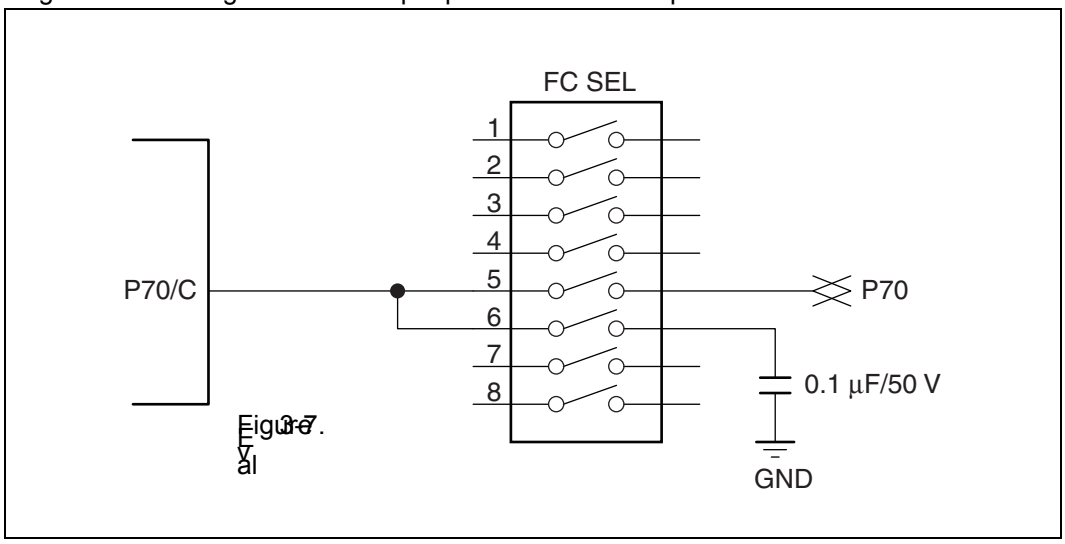

Figure 3-7. Eval

Table 3-5. Settings of the C-pin selection switch

C-pin	FC SEL setting	
	5	6
Available	OFF	ON
Not available	ON	OFF

3.6 User Data Bus Switching

Settings of the user data bus selection switch are configured.

If probing target pins (P00 to P07 and P10 to P17) have special specifications, such as for high-voltage ports, the user data bus probing circuit must be set to the disconnected status.

When the external bus of the evaluation MCU is not used, the disconnected status is the recommended setting for the user data bus probing circuit.

Using the user data bus selection switch on the emulator, set the user data bus probing circuit to the connected or disconnected status.

The configuration of the peripheral circuit for the user data bus selection switch is shown in Figure 3-8 and switch settings are shown inTable 3-6.

Table 3-6. Settings of user data bus selection switch

Probing target pin		1	2	3	4	5	6	7	8
P00 to P07 (P0 SENSE setting)	Connected	ON	ON	ON	ON	ON	ON	ON	ON
	Disconnected	OFF	OFF	OFF	OFF	OFF	OFF	OFF	OFF
P10 to P17 (P1 SENSE setting)	Connected	ON	ON	ON	ON	ON	ON	ON	ON
	Disconnected	OFF	OFF	OFF	OFF	OFF	OFF	OFF	OFF

Note:

This circuit has a function equivalent to that of a pull-up circuit with high resistance.
If all buses in the evaluation MCU and user system are in the Hi-Z state, about 3.0 V appears on the user data bus.

Figure 3-8. Configuration of the peripheral circuit for the user data bus selection switch

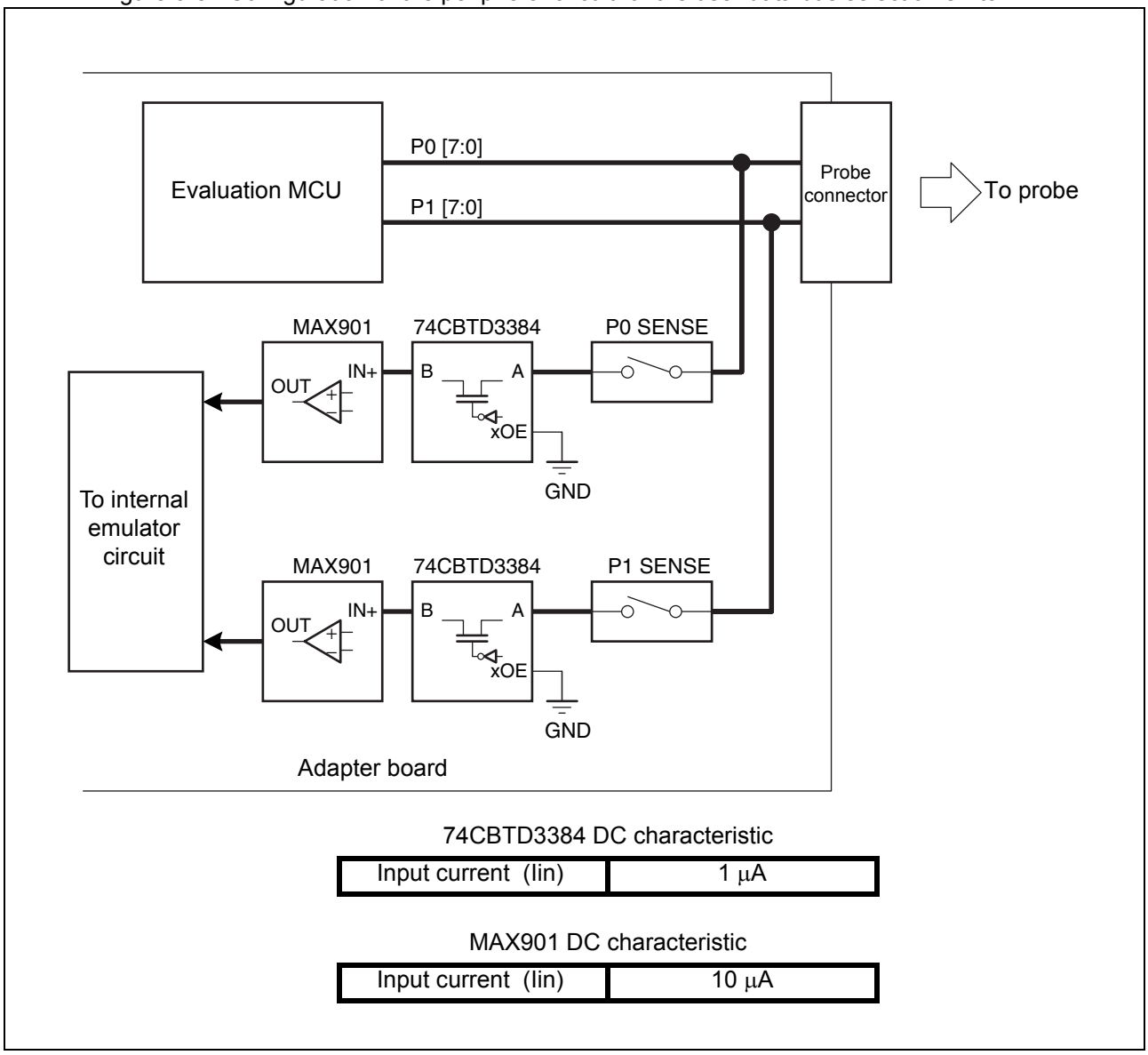

74CBTD3384 DC characteristic

Input current (Iin)	1 μA

MAX901 DC characteristic

Input current (Iin)	10 μA

3.7 Using the Setting Switches

This section explains how to use the setting switches and the status indicator LCD.

3.7.1 Functions of the setting switches

The setting switches can be used to change the information displayed on the status indicator LCD (referred to as the "LCD" in this manual) and change LAN parameters displayed on the LCD.

This section explains the menu displayed on the LCD and how to use the setting switches when the menu is displayed. For details about how to use the switches and the information displayed on the LCD in menu selection mode or normal operation mode, see the S_{OFTUNE} Workbench Operation Manual.

Table 3-7 lists the functions of the setting switches.

Table 3-7. Functions of the setting switches

Key name	Silk screen printing	Information displayed on LCD	Function
ENTER key	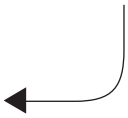	Initial screen for emulator	Changes the screen to the menu.
		Menu	Changes display to the submenu of the selected item.
		LAN parameter	Sets the column (position) to be changed.
			Sets the value (numeric value) to be changed.
		Selection/Confirmation	Sets a selected item or terminates display after confirmation.
Up/Down key	▲ / ▼	Menu	Scrolls display upward or downward.
		LAN parameter/Selection	Moves the cursor upward, downward, to the left, or to the right.
		LAN parameter	Increments or decrements the value (numeric value) to be changed.

3.7.2 Using switches to change parameter values

The following procedure applies to using the setting switches to change parameter values:

1. Display parameters on the LCD. Use the Up or Down key to move the blinking cursor (■) to the column (position) of the value to be changed.
2. Click the ENTER key to set the column (position) of the value to be changed. The cursor changes its form to "_" (underscore).
3. Use the Up or Down key to increment or decrement the defined value (numeric value) to the desired value (numeric value).
4. Click the ENTER key to confirm the new value (numeric value) to be set.
5. Change all values (numeric values) of the parameters to be modified. After that, use the Up or Down key to move the cursor to the location immediately to the right of "[OK]", and click the ENTER key to end the parameter value change operation.

3.7.3 Using switches for selection or confirmation

The following procedure applies to using the setting switches for selection and confirmation:

- For selection
  Use the Up or Down key to move the cursor to the location immediately to the right of an item or command (e.g., [Yes] or [No]) to select the item or command, and click the ENTER key.
- For confirmation
  Move the cursor to the location immediately to the right of [OK], and click the ENTER key.

3.7.4 Display configuration

Figure 3-9 shows the menu structure.

Figure 3-9. Menu configuration

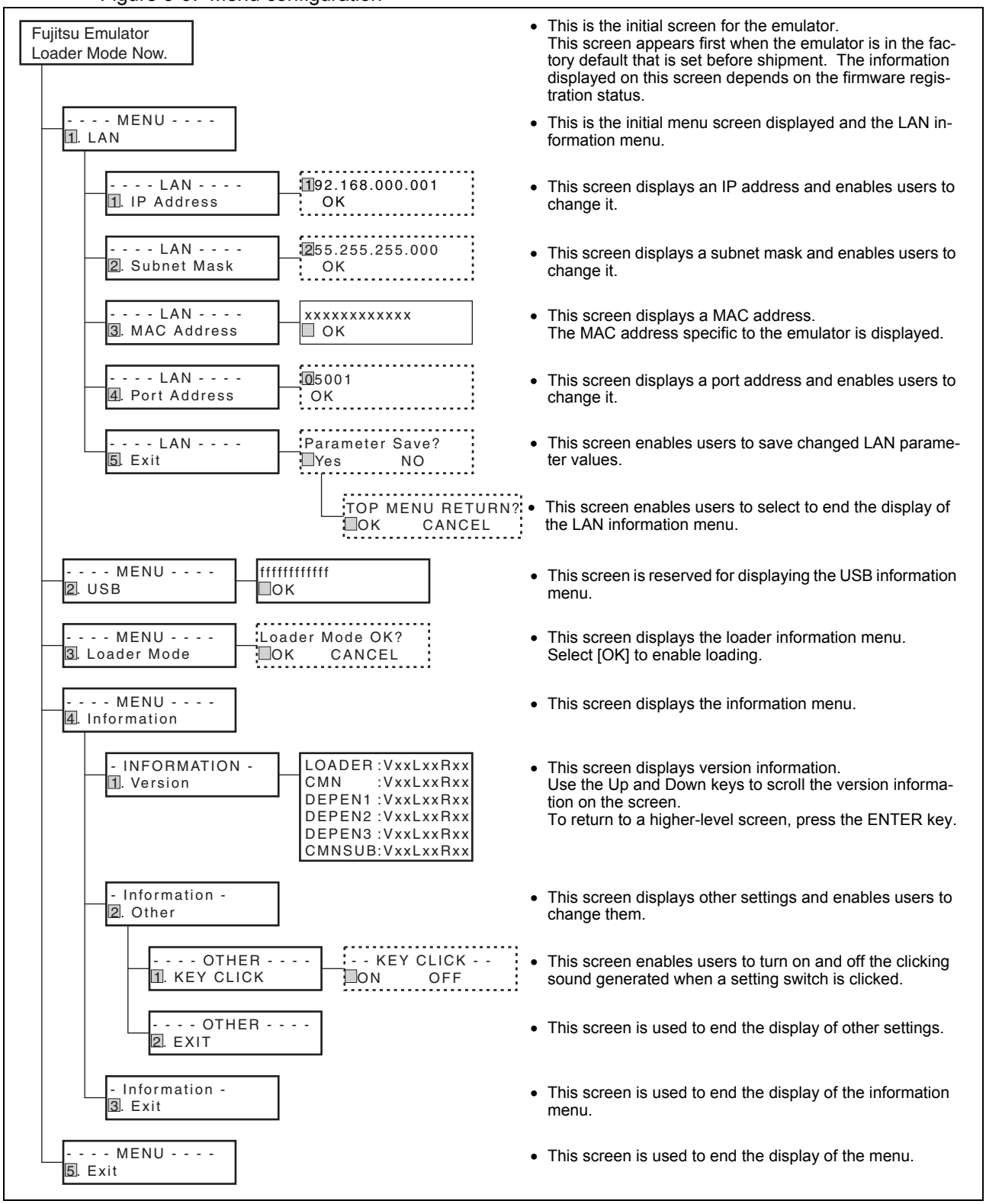

3.8 Power-On Sequence

Figure 3-10 "Power-on sequence" shows the sequence of power-on operations. Power on the host machine, emulator, and user system in sequence after making all necessary connections and settings. For the first use of the emulator after shipment, the emulator must be initialized (monitor loading) before the power-on sequence of the user system.

To turn on the emulator, push the POWER switch on the back panel of the emulator (see Figure 3 for the location of the POWER switch). The POWER switch is then locked in the ON position (pushed in).

For the first use of the emulator after shipment, the emulator must be initialized (monitor loading) before the power-on sequence of the user system. For details on how to initialize the emulator, see the S_{OFTUNE} Workbench Operation Manual.

Figure 3-10. Power-on sequence

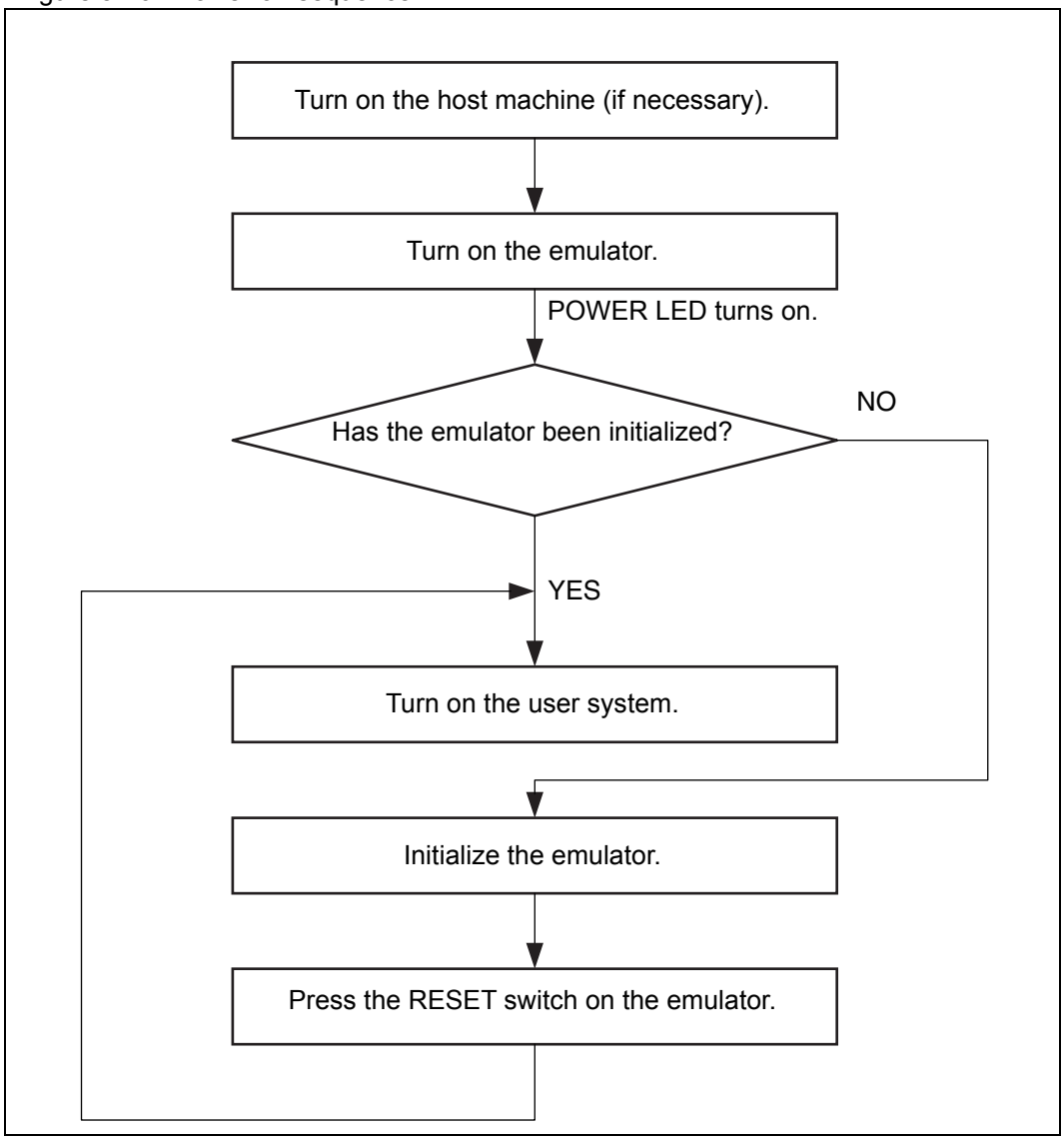

Note:

If the emulator has been sent to a factory for repair, the emulator is returned in the factory default (same as that at initial shipment). In this event, initialize the emulator before using it.

Revision History

Document Revision History

Document Title: F2MC-16L/16LX Emulator, MB2147-01-E Operation Manual Document Number: 002-07501				
Revision	**ECN#**	**Issue Date**	**Origin of Change**	**Description of Change**
**	–	07/08/2008	MITK	Initial release
*A	5311113	06/16/2016	MITK	Migrated to Cypress format
*B	5782526	06/27/2017	NIBK	Updated Cypress Logo and Copyright.