EZ-PD™ PMG1-B2 240 W 1 to 12-cell Lithium-ion battery charger solution board user guide

About this document

Scope and purpose

This document provides instructions for REF_PMG1_B2_DRP EZ-PD™ PMG1-B2 solution board bring-up.

Intended audience

This document is primarily intended for developers evaluating the EZ-PD™ PMG1-B2-based Lithium-ion (Li-ion) battery charger solution for 12-cell battery packs with the knowledge of power electronics and Li-ion battery handling.

About this product group

Target applications

- Cordless power and outdoor power equipment
- Cordless vacuum cleaners
- Home appliances
- E-bike and E-scooter solutions
- Multicopters and drones

Product family

EZ-PD™ PMG1 (Power Delivery Microcontroller Gen 1) is a portfolio of high-voltage microcontrollers (MCUs) with USB Power Delivery (PD). The EZ-PD™ PMG1 MCUs have a market-proven USB PD stack, ensuring spec compliance and interoperability. It is the only high-voltage, programmable USB Power Delivery solution on the market today with an integrated Arm® Cortex®-M0/M0+ CPU.

Reference board

Product(s) embedded on a PCB with a focus on specific applications and defined use cases that may include software. PCB and auxiliary circuits are optimized for the requirements of the target application.

Note: *Boards do not necessarily meet safety, EMI, quality standards (for example UL, CE) requirements.*

Safety precautions

Note: *The following warnings regarding the hazards associated with development systems.*

Table 1 Safety precautions

	**Warning**: *The evaluation or reference board contains DC bus capacitors, which take time to discharge after removal of the main supply. Before working on the drive system, wait five minutes for capacitors to discharge to safe voltage levels. Failure to do so may result in personal injury or death. Darkened display LEDs are not an indication that capacitors have discharged to safe voltage levels.*
	**Caution:** *The heat sink and device surfaces of the evaluation or reference board may become hot during testing. Hence, necessary precautions are required while handling the board. Failure to comply may cause injury.*
	**Caution:** *The evaluation or reference board contains parts and assemblies sensitive to electrostatic discharge (ESD). Electrostatic control precautions are required when installing, testing, servicing, or repairing the assembly. Component damage may result if ESD control procedures are not followed. If you are not familiar with electrostatic control procedures, refer to the applicable ESD protection handbooks and guidelines.*
	**Caution:** *The evaluation or reference board is shipped with packing materials that need to be removed prior to installation. Failure to remove all packing materials that are unnecessary for system installation may result in overheating or abnormal operating conditions.*

Table of contents

About this document **1**
About this product group **1**
Safety precautions **2**
Table of contents **3**
1 Introduction **4**
2 Board default specifications **5**
3 EZ-PD™ PMG1-B2 Li-ion battery charger solution board overview **6**
4 Required hardware (Sink mode - battery charging) **9**
4.1 Equipment list 9
5 Bring-up procedure **10**
5.1 Battery charging 10
5.2 Voltage regulation mode 11
6 Related resources **12**
References **13**
Glossary **14**
Revision history **15**
Disclaimer **16**

1 Introduction

The EZ-PD™ PMG1-B2 240 W USB-C battery charging solution demo board, referred as “REF_PMG1_B2_DRP”, which provides a simple implementation of a 240 W USB-C based 1-12-cell Li-ion battery charging using Infineon's EZ-PD™ PMG1-B2 USB PD controller. The board offers a single USB Type-C receptacle supporting up to 240 W PD with default setting for 5-cell Li-ion battery load. The EZ-PD™ PMG1-B2 controller can negotiate and Sink up to 240 W with the connected USB-C adapter and use the negotiated power to charge the 12-cell Li-ion battery pack. The solution board is dual role power (DRP) capable and offers 27 W in Source mode.

Infineon uses these key components in the solution board:

- EZ-PD™ PMG1-B2 CYPM1216-68LQXI USB PD MCU integrated with buck-boost controller
- OptiMOS™ 5 BSZ040N06LS5 power N-channel MOSFETs to implement the buck-boost converter
- OptiMOS™ IPB110P06LM P-channel MOSFETs for input and output power path connect/disconnect

A high-level system diagram of the board is shown in Figure 1.

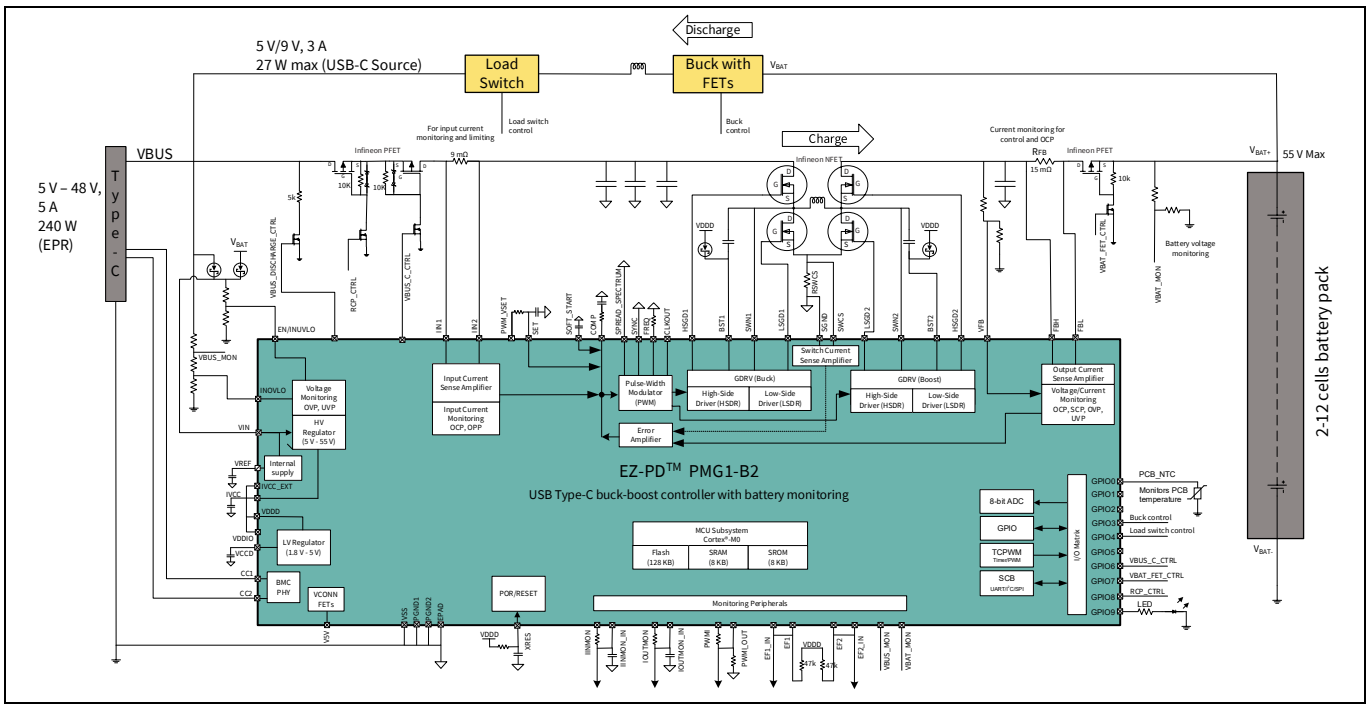

Figure 1 EZ-PD™ PMG1-B2-based Li-ion battery charger with Sink/Source capability

2 Board default specifications

Table 2 Charger hardware specifications

Parameter	Value
Input voltage (Type-C)	5.0 V to 48 V DC
Maximum supported output power (battery)	230 W
Maximum supported output current (battery)	10 A (limited to 5 A by default firmware without cooling fan)
Maximum supported output voltage	50.4 V (configured to 21.5 V on the hardware for 5-cell battery pack)
Minimum battery voltage for charging	15 V (2.5 V per cell/5 cell battery pack)
Peak efficiency	< 96%
Protections	• VBUS overvoltage protection (OVP) • VBUS overcurrent protection (OCP) • VBAT overvoltage protection (OVP) • VBAT undervoltage protection (UVP) • Short-to-ground protection (S2G) • Overtemperature protection (OTP)
Battery charging profile[1] (With any EPR\SPR adapter with equal or higher than 100 W power rating)	Constant current (CC) mode (5 cycles) until full charge voltage is reached at the end of the 5th cycle • Cycle-1: 5 A • Cycle-2: 2.6 A • Cycle-3: 1.3 A • Cycle-4: 0.75 A • Cycle-5: 0.4 A

[1] This battery charging profile is optimized for 5-cell batteries by default firmware, but it is customizable via firmware. Contact Infineon Support for any adjustments.

3 EZ-PD™ PMG1-B2 Li-ion battery charger solution board overview

Figure 2 shows the EZ-PD™ PMG1-B2 solution board, which is designed to meet the specifications listed in Table 2.

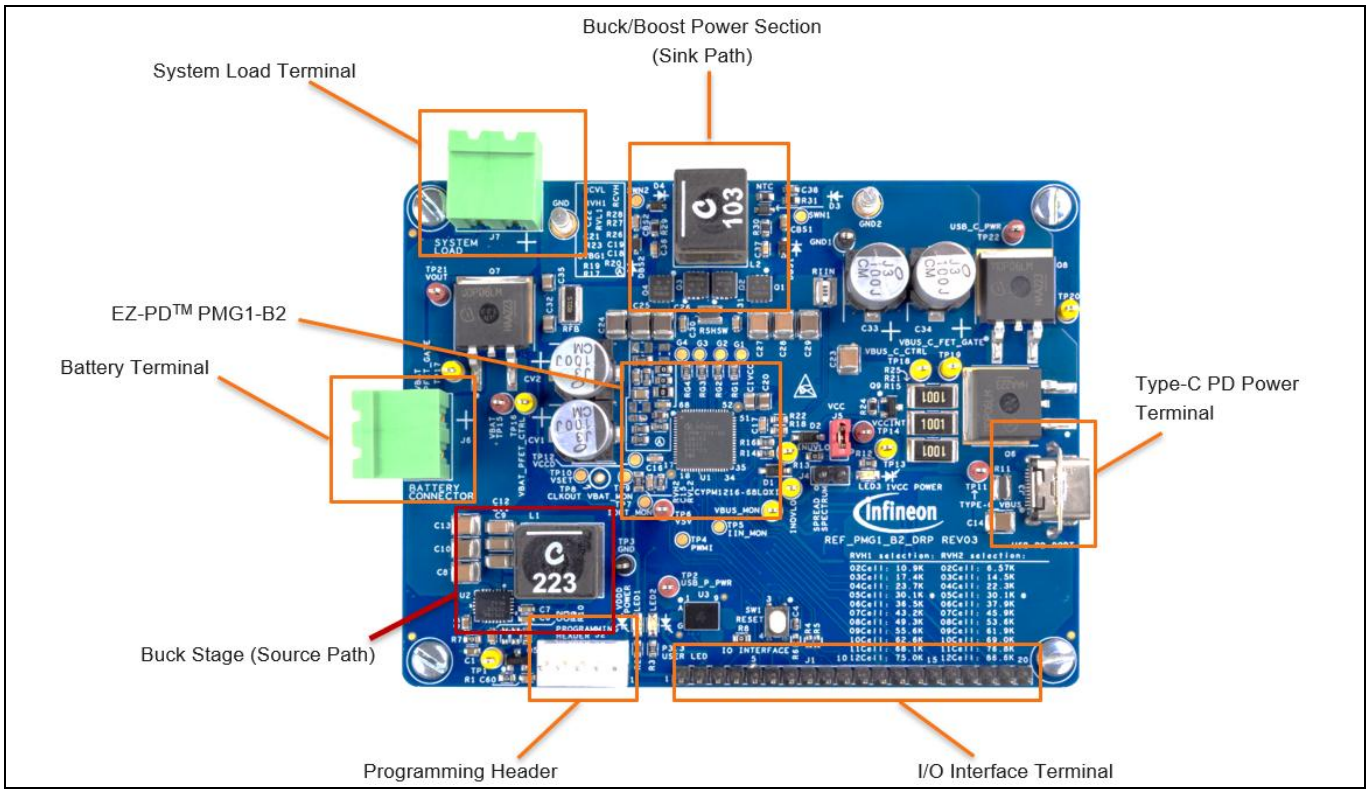

Figure 2 EZ-PD™ PMG1-B2 solution board top view

Complete design files including schematics, layout, and BOM are available upon request. Table 3 describes the connectors and Table 4 describes the test points on the PCB.

Table 3 Connectors list

Connector	Description
J1	**I/O interface header for signal monitoring:** • Pin1: VDDD (5 V) • Pin2: VDDIO (5 V) • Pin3: 9V_SRC_SEL • Pin4: VBAT_PFET_CTRL • Pin5: P1.2/BUCKBOOST_EN • Pin6: P1.3/RECT • Pin7: PWMI_OUT • Pin8: P3.2/UART_TX • Pin9: P3.3/UART_RX • Pin10: P0.0/SWDIO

Connector	Description
	• Pin11: P0.1/SWDCLK • Pin12: PWM_SET • Pin13: VBUS_DISCHARGE • Pin14: P1.5/NTC • Pin15: VBUS_C_CTRL • Pin16: EF1 • Pin17: EF2 • Pin18: CC1 • Pin19: CC2 • Pin20: GND
J2	**SWD connector:** Connect a MiniProg4 programmer to program the MCU. For pin details, see the MiniProg4 Program and Debug Kit guide
J3	**USB-C connector:** Supports operation as a power Sink or Source
J4	Spectrum-spread populates a jumper to activate the spectrum spread feature on the EZ-PD™ PMG1-B2 buck-boost controller
J5	Place a jumper to supply 5 V to the system using the EZ-PD™ PMG1-B2 internal 5 V low dropout (LDO) regulator • Pin 1: VDDD/ IVCC_EXT • Pin 2: IVCC (5 V LDO reference) remove the jumper and supply external 5 V to Pin 1 to provide external power to the system
J6	**Battery terminal:** Connect the battery pack positive and negative to this terminal. Note the polarity
J7	**System load terminal:** This terminal is parallel to the J6 and it can be used to connect a DC-load to discharge the battery pack if needed. Note the polarity

Table 4 Test points

Test points	Description
TP1	U2 pin#15 (MODE/SYNC)
TP2	U2 buck/boost output
TP4	PWMI (EZ-PD™ PMG1-B2 pin #5)
TP5	IINMON_IN (EZ-PD™ PMG1-B2 pin #29). See the datasheet for the relative equation [1]
TP6	V5V (EZ-PD™ PMG1-B2 pin #25)
TP7	IOUTMON_OUT (EZ-PD™ PMG1-B2 pin #17). See the datasheet for the relative equation [1]
TP8	CLKOUT (EZ-PD™ PMG1-B2 pin #8)
TP9	VBAT_MON (EZ-PD™ PMG1-B2 pin #16), battery voltage monitoring pin
TP10	SET (EZ-PD™ PMG1-B2 pin #3), SET pin input for current control
TP11	Type-C VBUS
TP12	VCCD (EZ-PD™ PMG1-B2 pin #14)
TP13	Q11 N-FET gate connection (input P-FETs Q6 gate control circuit)
TP14	IVCC (EZ-PD™ PMG1-B2 pin #51), 5 V LDO output
TP15	Battery positive terminal
TP16	Q13 N-FET gate connection (output P-FETs Q7gate control circuit)
TP17	Output P-FET Q7 gate connection
TP18	Q12 N-FET gate connection (input P-FET Q8 gate control circuit)
TP19	Input P-FET (reverse current blocker) Q8 gate connection
TP20	Input P-FET (inrush current limiter) Q6 gate connection
TP21	Buck-boost output bus
TP22	Buck-boost input bus
TP23	VREF (EZ-PD™ PMG1-B2 pin #2), 2 V reference output
TP24	COMP signal (EZ-PD™ PMG1-B2 pin #68)
TP3, GND, GND1, GND5	GND
G1	High-side buck FET (Q1) gate signal
G2	Low-side buck FET (Q2) gate signal
G3	Low-side boost FET (Q3) gate signal
G4	High-side boost FET (Q4) gate signal
VBUS_MON	VBUS_MON (EZ-PD™ PMG1-B2 pin #30)
INOVLO	INOVLO (EZ-PD™ PMG1-B2 pin #43)
INUVLO	EN/INUVLO (EZ-PD™ PMG1-B2 pin #47)
VFB	VFB (EZ-PD™ PMG1-B2 pin #1)
SWN1	SWN1 (EZ-PD™ PMG1-B2 pin #55)
SWN2	SWN2 (EZ-PD™ PMG1-B2 pin #60)

4 Required hardware (Sink mode - battery charging)

4.1 Equipment list

- EZ-PD™ PMG1-B2 2-12-cell Li-ion battery charger solution board (Rev3.0)
- USB Type-C power adapters > 65 W (for EPR adapter, USB-C EPR cable is needed)
- Oscilloscope (minimum 100 MHz)
- Isolated current probe to monitor the battery current
- 5-cell Li-ion battery pack (minimum 5 A charging capability, 10 Ah capacity recommended)

For high-power test condition, user should provide an active cooling thermal management for the solution board by attaching a heat sink in the designated area on the back side of the board with isolated thermal adhesive tape as shown in Figure 3. A blowing fan will be needed to complete the active cooling thermal management.

It is recommended to use TGH-0350-03 for heat sink and 8810-1-5 for double-sided adhesive thermal tape from DigiKey on this board if not equipped.

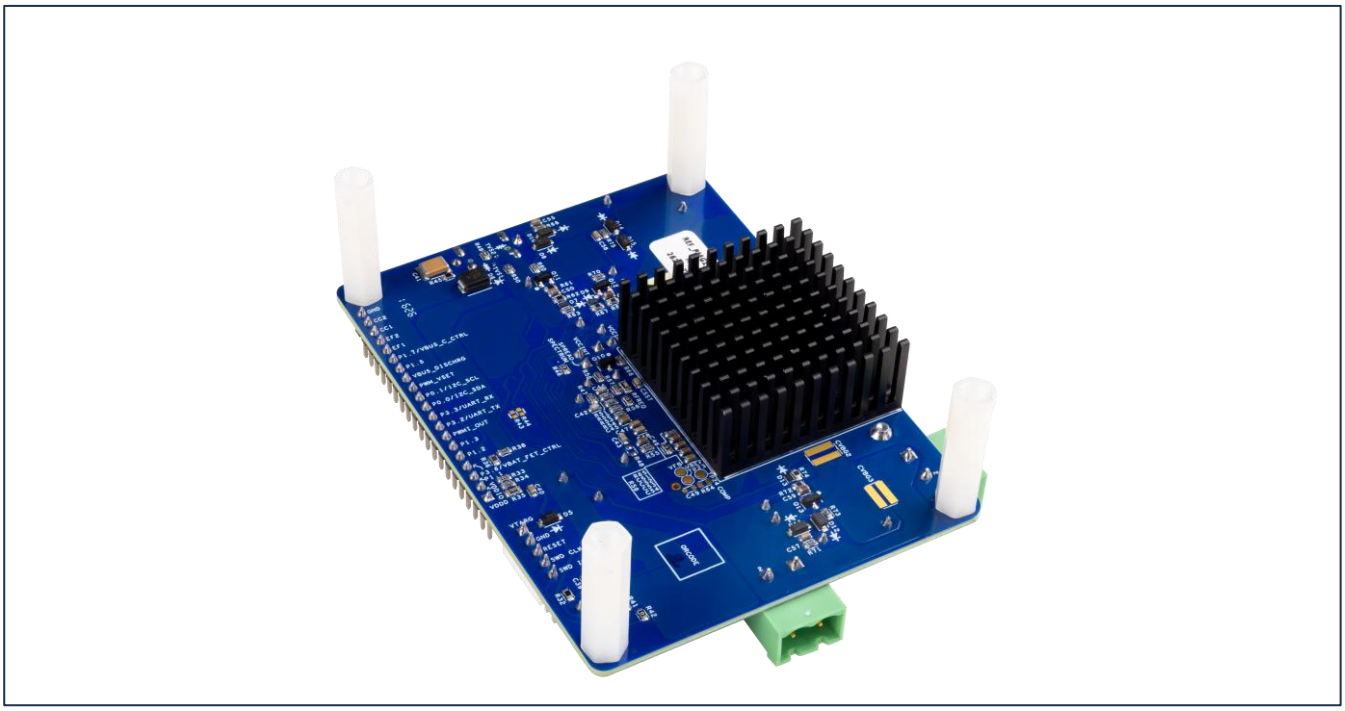

Figure 3 EZ-PD™ PMG1-B2 solution board bottom view (with heat sink)

5 Bring-up procedure

Safety instructions

- Do not leave the setup unattended while testing
- Do not use old battery cells/packs
- Before connecting the battery, ensure that the battery pack is not damaged
- Do not short the battery charger output terminal (J66) or the system load terminals (J7)
- Do not use the system load terminal (J7) to connect an additional battery pack
- Do not use long wires to connect the battery to the battery load terminal (J6)
- All the Lithium-ion battery safety requirements should be considered while testing the board
- Multiple charging and discharging attempts of the battery pack will result in the battery temperature elevation and might result in a battery thermal runaway. Monitor the temperature of the battery pack to avoid any hazardous condition

5.1 Battery charging

Figure 4 shows an example of the solution board test setup with a connected battery pack. It is highly recommended to place a fast fuse (15 A to 20 A) in series with the battery pack for safety if the battery pack does not have any battery management system (BMS).

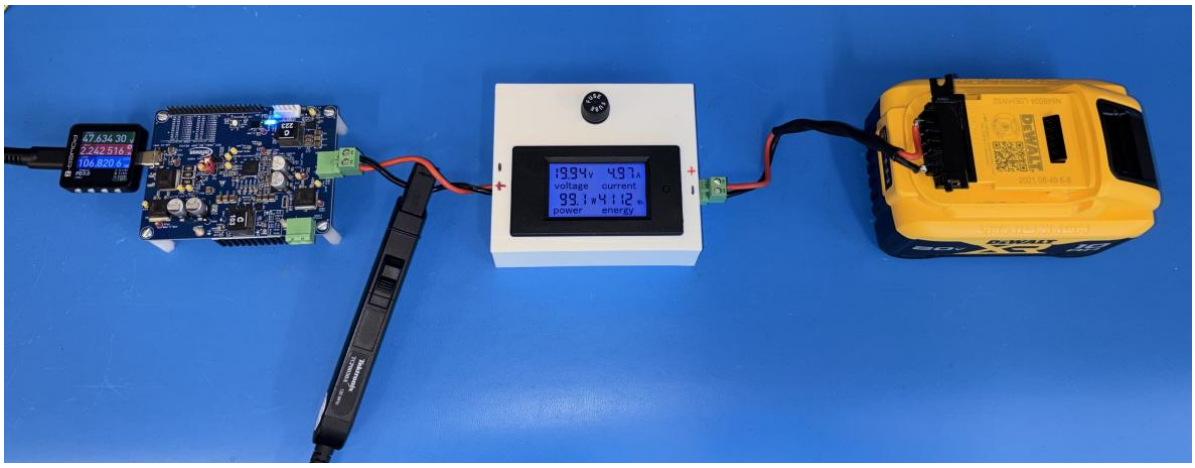

Figure 4 5-cell battery charging setup example (with power meter and fuse in between)

1. Populate J5 jumper if not populated (to use internal LDO for system 5 V)
2. Connect the battery pack to the battery terminal (J6), note the polarity
3. Setup to oscilloscope to observe the battery current
4. Connect a USB PD power adapter to J3; the user LED will start blinking (charging will start if the battery voltage is > 15 V

Figure 5 shows an example of charger startup with 5-cell battery load power up by a 48 V EPR Type-C adapter. When the USB PD contract is established, the adapter V_{BUS} ramps up to 48 V and then battery charging starts (PWMI ON). Then, the output current ramps up to the maximum output current 5 A executing the first cycle. The battery charger current will follow the programmed charging current cycles according to the Table 2 until the battery is fully charged. Figure 6 shows the multicycle constant current default charging algorithm in the firmware.

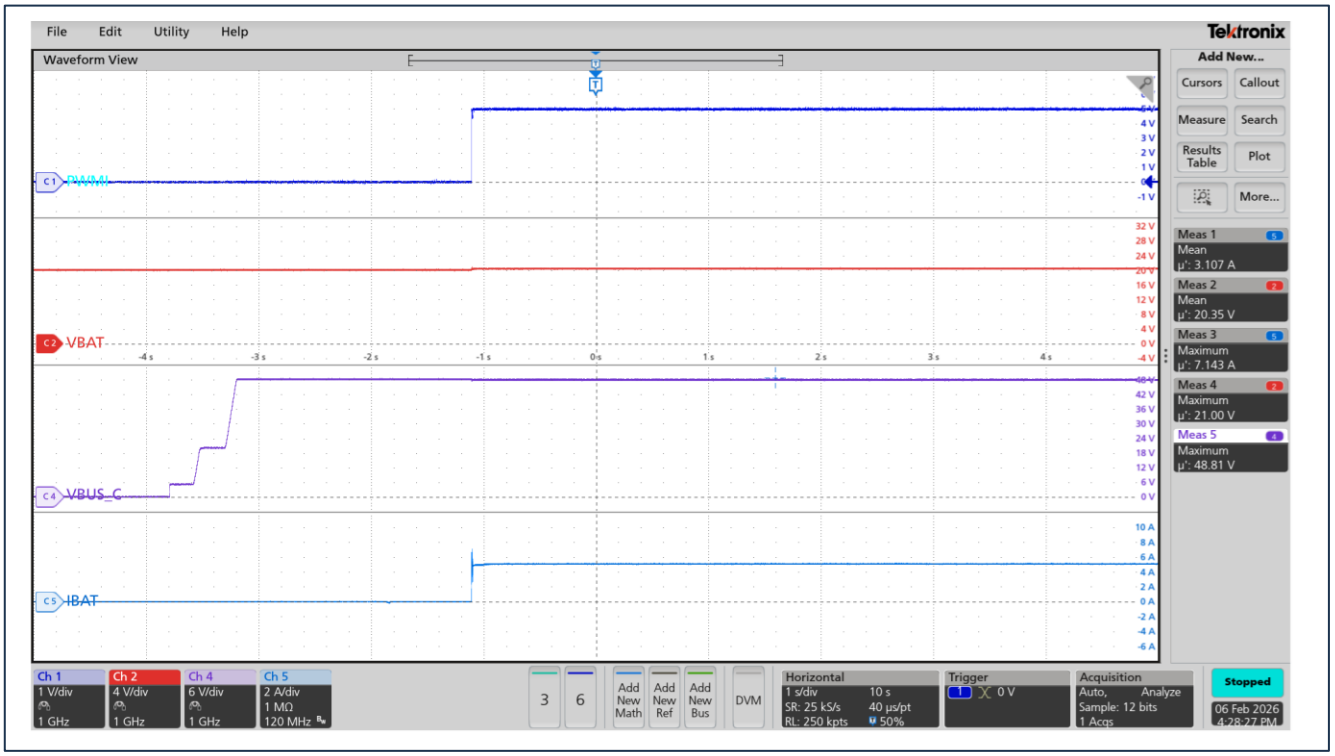

Figure 5 5-cell battery charging startup example (5 A charging current)

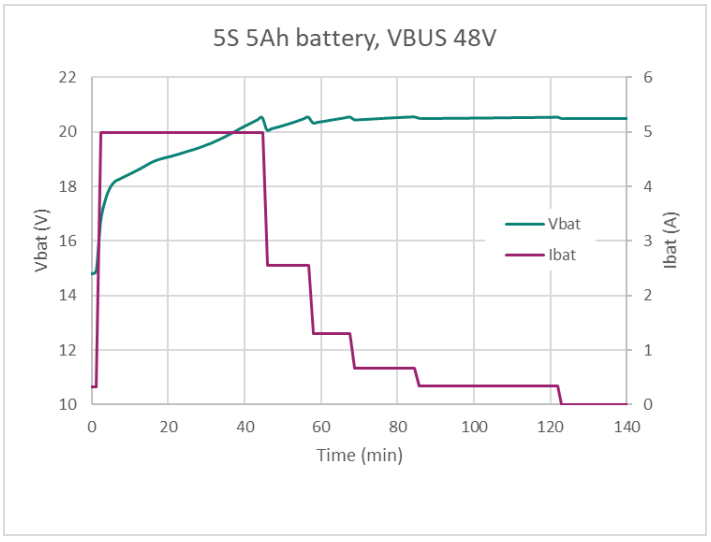

Figure 6 Battery charging default algorithm

5.2 Voltage regulation mode

REF_PMG1_B2_DRP board can be configured as a voltage regulator to convert the input USB PD power into a fixed output voltage (24 V by default) with some hardware and firmware changes. Refer to the application note [2] for details related to voltage regulator configurations.

6 Related resources

- USB PD high-voltage microcontrollers
- Developer Community

References

[1] Infineon Technologies AG: *EZ-PD™ PMG1-B2: 1 to 12-cell battery charge controller with USB-C PD MCU*; Available online

[2] Infineon Technologies AG: *USB PD-integrated 1 to 12-cell battery charger using EZ-PD™ PMG1-B2 MCU*; Available online

Glossary

DRP
Dual role power (DRP)

EPR
Extended Power Range (EPR)

GPIO
General-purpose input/output (GPIO)

LDO
Low dropout regulator (LDO)

NC
Not connected (NC)

OCP
overcurrent protection (OCP)

OTP
overtemperature protection (OTP)

OVP
overvoltage protection (OVP)

PD
Power Delivery (PD)

S2G
Short-to-ground protection (S2G)

SWD
Serial Wire Debug (SWD)

UVP
Undervoltage protection (UVP)

Revision history

Document revision	Date	Description of changes
**	2025-10-06	Initial release
*A	2026-09-17	Updated the content based on Rev3.0 hardware

Trademarks
All referenced product or service names and trademarks are the property of their respective owners.

Edition: 2026-09-17

Published by
Infineon Technologies AG
Am Campeon 1-15
85579 Neubiberg, Germany

© 2026 Infineon Technologies AG.
All rights reserved

Do you have a question about this document?
Email: erratum@infineon.com

Document reference:
002-42080 Rev. *A

Important Notice
This evaluation board, demonstration board, reference board or kit and any related documentation (“Evaluation Board”) is sold or provided and delivered by Infineon Technologies AG and its affiliates (“Infineon”). Evaluation Boards are part of Infineon’s non-serial products.
This Evaluation Board is delivered to customer "AS IS", without any warranty (whether express or implied) or liability of Infineon of any kind, including but without limitation any warranty of merchantability, fitness for a particular purpose or non-infringement. These limitations and exclusions shall not apply in case of Infineon's willful misconduct or in any other case where liability is mandatory at law.
This Evaluation Board shall only be used by customer for test purposes and not for series production. However, the Evaluation Board shall not to be used for reliability testing. The Evaluation Board is exclusively intended for technically qualified and skilled customer representatives. The Evaluation Board shall not be used in any way where a failure of the Evaluation Board, or any consequences of the use thereof, can reasonably be expected to result in personal injury.
Evaluation Boards may not comply with CE or similar standards (including without limitation the EMC Directive 2004/EC/108 and the EMC Act) and may not fulfill other requirements of the country in which they are operated by the customer. The customer shall ensure that each Evaluation Board will be handled in a way which is compliant with all relevant requirements and standards in the country in which it is operated.
Software and associated documentation and materials included or referenced in the Evaluation Board (“Software”) is owned by Infineon and is protected by and subject to worldwide patent protection, worldwide copyright laws, and international treaty provisions. Therefore, you may use this Software only as provided in the license agreement accompanying the software package from which you obtained this Software.
If no license agreement applies, then any use, reproduction, modification, translation, or compilation of this Software is prohibited without the express written permission of Infineon. Unless otherwise expressly agreed with Infineon, this Software is provided to customer "AS IS", without any warranty (whether express or implied) or liability of Infineon of any kind, including but without limitation any warranty of merchantability, fitness for a particular purpose or non-infringement.
These limitations and exclusions shall not apply in case of Infineon's willful misconduct or in any other case where liability is mandatory at law. Infineon reserves the right to make changes to the Software without notice. You are responsible for properly designing, programming, and testing the functionality and safety of your intended application of the Software, as well as complying with any legal requirements related to its use. Infineon does not guarantee that the Software will be free from intrusion, data theft or loss, or other breaches (“Security Breaches”), and Infineon shall have no liability arising out of any Security Breaches. The Software shall not be used in any way where a failure of the Evaluation Board or any consequences of the use thereof, can reasonably be expected to result in personal injury.
Safety & Operating Instructions:
Customer shall check the Evaluation Board for any physical damage which may have occurred during transport. If customer detects any damages or defects in the Evaluation Board, customer shall not connect the Evaluation Board to a power source. Customer shall contact Infineon for further support. If customer observes unusual operating behavior during the evaluation process, customer shall immediately shut off the power supply to the Evaluation Board and consult Infineon for support.
Customer shall not touch the Evaluation Board during operation and keep a safe distance.
Customer shall not touch the Evaluation Board after disconnecting the power supply, several components may still store electrical voltage and can discharge through physical contact. Several parts, like heat sinks and transformers, may still be very hot. Allow the components to cool before touching or servicing.
The electrical installation must be completed in accordance with the appropriate safety requirements.