Infineon A²B evaluation kit

Evaluation kit to experiment with different system configurations of XENSIV digital MEMS microphones, using the A²B interface in combination with the AURIX microcontroller

About this document

Scope and purpose

This user guide describes the usage and basic operation of the A²B evaluation kit. It describes the parts of the kit and includes schematic and pinout of the individual boards.

Intended audience

Hardware and software engineers, evaluating Infineon digital XENSIV™ MEMS microphones.

Evaluation kit

This evaluation kit allows multi microphone audio readout and processing for many applications (e.g. siren detection, beam forming, in-cabin-communication, active noise cancellation, …). It can be used by customers to develop their own algorithms and experiment with different numbers of microphones in different locations inside or outside of the car. With its magnetic microphone slave modules, it allows easy mounting on any metal surface.

The microphone slave modules are equipped with protective membranes in front of the microphone sound ports and silicon gaskets on the cable feed throughs. This allows real driving test and the data collection even under dusty and slightly wet conditions.

It also shows how to connect the Infineon digital XENSIV™ MEMS microphones to an A²B transceiver and how to interface to the AURIX™ microcontroller.

Note: *PCB and auxiliary circuits are NOT optimized for final customer design.*

A²B evaluation kit with the ECU master unit and 4 microphone slave modules.

Important notice

“Evaluation Boards and Reference Boards” shall mean products embedded on a printed circuit board (PCB) for demonstration and/or evaluation purposes, which include, without limitation, demonstration, reference and evaluation boards, kits and design (collectively referred to as “Reference Board”).

Environmental conditions have been considered in the design of the Evaluation Boards and Reference Boards provided by Infineon Technologies. The design of the Evaluation Boards and Reference Boards has been tested by Infineon Technologies only as described in this document. The design is not qualified in terms of safety requirements, manufacturing and operation over the entire operating temperature range or lifetime.

The Evaluation Boards and Reference Boards provided by Infineon Technologies are subject to functional testing only under typical load conditions. Evaluation Boards and Reference Boards are not subject to the same procedures as regular products regarding returned material analysis (RMA), process change notification (PCN) and product discontinuation (PD).

Evaluation Boards and Reference Boards are not commercialized products, and are solely intended for evaluation and testing purposes. In particular, they shall not be used for reliability testing or production. The Evaluation Boards and Reference Boards may therefore not comply with CE or similar standards (including but not limited to the EMC Directive 2004/EC/108 and the EMC Act) and may not fulfill other requirements of the country in which they are operated by the customer. The customer shall ensure that all Evaluation Boards and Reference Boards will be handled in a way which is compliant with the relevant requirements and standards of the country in which they are operated.

The Evaluation Boards and Reference Boards as well as the information provided in this document are addressed only to qualified and skilled technical staff, for laboratory usage, and shall be used and managed according to the terms and conditions set forth in this document and in other related documentation supplied with the respective Evaluation Board or Reference Board.

It is the responsibility of the customer’s technical departments to evaluate the suitability of the Evaluation Boards and Reference Boards for the intended application, and to evaluate the completeness and correctness of the information provided in this document with respect to such application.

The customer is obliged to ensure that the use of the Evaluation Boards and Reference Boards does not cause any harm to persons or third-party property.
The Evaluation Boards and Reference Boards and any information in this document is provided "as is" and Infineon Technologies disclaims any warranties, express or implied, including but not limited to warranties of non-infringement of third-party rights and implied warranties of fitness for any purpose, or for merchantability.

Infineon Technologies shall not be responsible for any damages resulting from the use of the Evaluation Boards and Reference Boards and/or from any information provided in this document. The customer is obliged to defend, indemnify and hold Infineon Technologies harmless from and against any claims or damages arising out of or resulting from any use thereof.

Infineon Technologies reserves the right to modify this document and/or any information provided herein at any time without further notice.

Safety precautions

Note: *Please note the following warnings regarding the hazards associated with development systems.*

Table 1 Safety precautions

	Caution: *The evaluation or reference board contains parts and assemblies sensitive to electrostatic discharge (ESD). Electrostatic control precautions are required when installing, testing, servicing or repairing the assembly. Component damage may result if ESD control procedures are not followed. If you are not familiar with electrostatic control procedures, refer to the applicable ESD protection handbooks and guidelines.*
	Caution: *The evaluation or reference board is shipped with packing materials that need to be removed prior to installation. Failure to remove all packing materials that are unnecessary for system installation may result in overheating or abnormal operating conditions.*

Table of contents

About this document **1**
Important notice **2**
Safety precautions **3**
Table of contents **4**
1 The evaluation kit at a glance **5**
1.1 Main features 5
1.2 Scope of supply 6
2 Quick start **8**
3 System hardware and functional description **9**
3.1 ECU master unit 9
3.1.1 AURIX™ lite kit 10
3.1.2 A²B master board 11
3.1.3 Microphone array extension board 12
3.2 Microphone slave module 13
3.2.1 Slave PCB 13
3.2.2 Slave housing 14
3.3 Cables 15
4 Software **16**
4.1 General info 16
4.2 Demo software installed on the AURIX™ 17
4.2.1 Realtime audio loop back 17
4.2.2 Live level meter 17
5 System design **18**
5.1 A²B master PCB 18
5.1.1 Schematics 18
5.1.2 Placement 21
5.2 Microphone slave PCB 22
5.2.1 Schematics 22
5.2.2 Placement 24
5.3 Microphone array extension PCB 25
5.3.1 Schematics 25
5.3.2 Placement 26
6 Appendices **27**
6.1 Abbreviations and glossary 27
References **28**
Revision history **29**
Disclaimer **30**

1 The evaluation kit at a glance

This evaluation kit is designed for customers who want to develop their own algorithms for sound detection and experiment with different numbers of microphones in different locations inside or outside of the car.

It consists of an ECU master unit with an AURIX™ microcontroller and several microphone slave modules with 4 MEMS microphones each. The audio data from the microphones are transmitted via A²B bus to the AURIX™. The system can be configured, how many slave modules and which and how many microphones per slave shall be used. The audio data of up to 8 microphones can be processed inside the AURIX™.

The user can then implement his own algorithm for processing the audio data on the microcontroller.

For easy start and simple demonstration, the AURIX™ is pre-flashed with some simple demo code. Details can be found in chapter 4.2.

1.1 Main features

- Full evaluation kit for multi microphone audio readout and processing for many different applications
- **Target applications:** Siren detection, hands-free speech, voice commands, beam-forming, in-cabin-communication, active noise cancellation (ANC), …
- System can be used for driving tests outside on a demo car
- Phantom powered slave modules with 4 microphones each
- Slave PCB mounted in a spray water sealed housing
- Mountable to the outside of a car by magnets
- Aerodynamic shape to avoid audible air turbulences
- AURIX™ sample code with up to 8 TDM channels
- Predefined configurations available
    - 4 slaves with 2 active microphones each
    - 2 slaves with 4 active microphones each
    - 1 slave with 4 active microphones
- Individual configuration via SigmaStudio possible

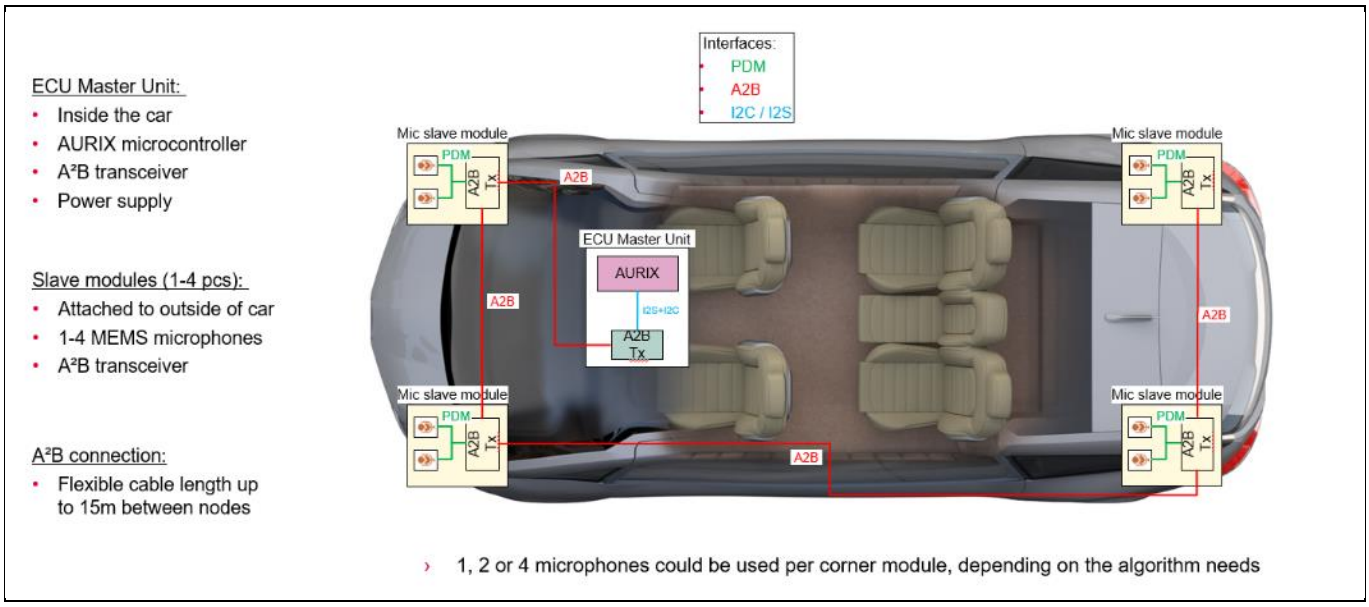

Figure 1 System overview of a possible A²B system outside of a car for siren detection

1.2 Scope of supply

The kit consists of a master unit and a variable number of slaves, cables and housings, which also can be ordered separately.

1. ECU master unit:
    a. Base microcontroller board
    b. A²B master board
    c. Microphone array extension with 15 LEDs
2. Housing for the ECU master unit
3. Power supply 12V
4. 1 … 4 slave modules, equipped with 4 MEMS microphones IM67D130A each
5. Magnetic housing for the slave board
6. Cables with different length to interconnect the master and the slaves

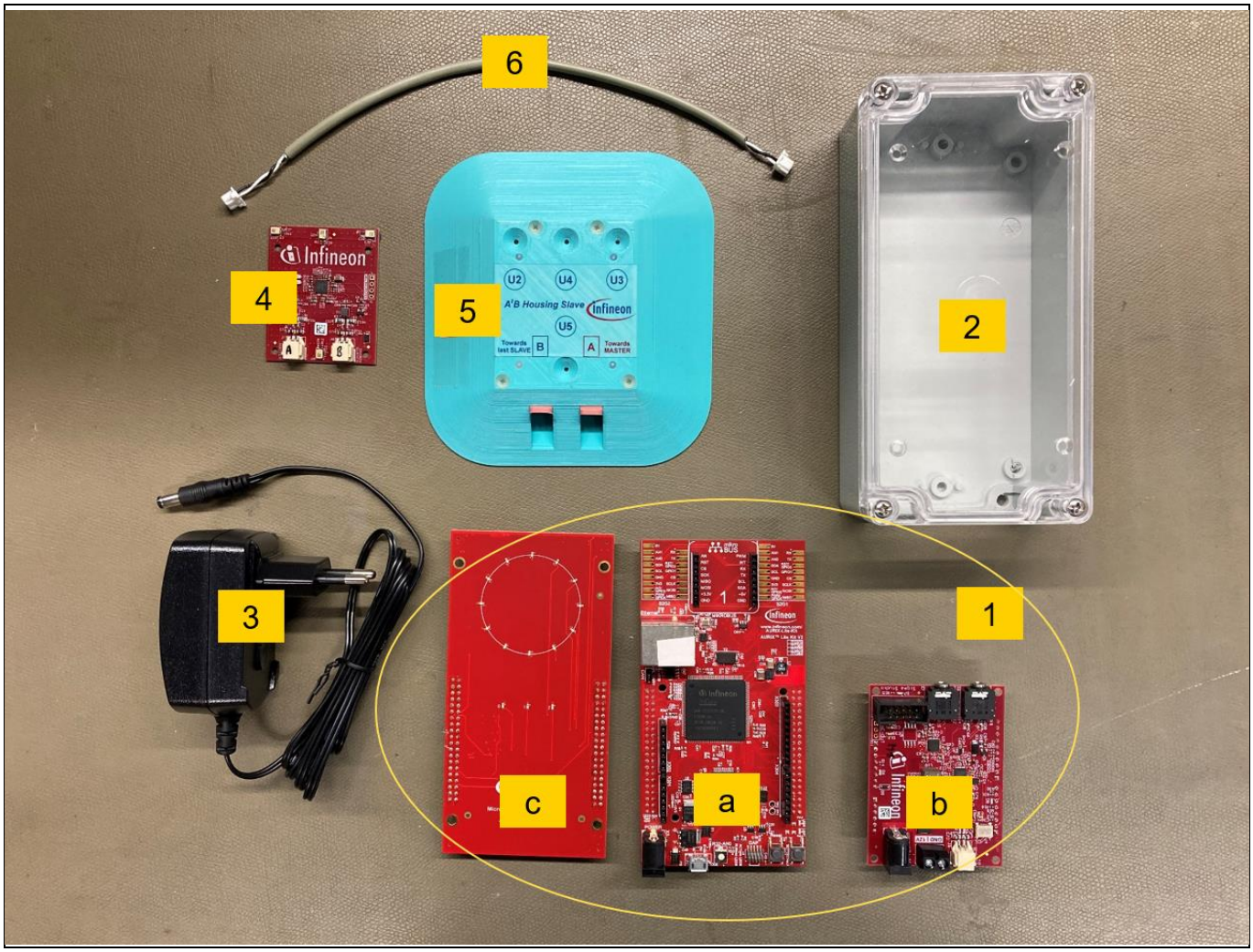

Figure 2 Components of the A²B Evaluation Kit

Table 2 Order information

Name	Item	Description	Order code
EVAL_A2B_Kit-Full	1x AURIX™ Lite Kit TC375	Complete A²B-Kit with all boards, housings and cables included (2 slaves)	SP005742620
	1x A2B_Extension (Mic-Array + A2B Master Board)		
	2x EVAL_A2B_SIM67D130A		
	2x EVAL_A2B_S-Housing		
	1x EVAL_A2B_M-Housing		
	Cables 2x 25cm + 2x 400cm)		
KIT_A2G_TC375_LITE	AURIX™ base board	AURIX™ Arduino shield as base for the ECU master unit	SP005551747
EVAL_A2B_Extension	A²B master board	Extension for AURIX™ shield to allow A²B operation Note: AURIX Lite Kit TC375 and housing not included	SP005742622
	Microphone array extension	Extension for AURIX™ shield for display purpose	
	Power supply 12V	Main power supply for the whole evaluation kit	
EVAL_A2B_SIM67D130A	1x microphone slave PCB	Slave PCB, equipped with 4 MEMS microphones IM67D130A and one cable (housing not included)	SP005742624
	1x cable, ~25 cm		
EVAL_A2B_S-Housing	Slave housing only	Magnetic housing for A2B_Slave with gaskets and membranes	SP005742626
EVAL_A2B_M-Housing	Master housing only	Housing for A2B_Extension (ECU master unit)	SP005742628
EVAL_A2B_Cable-025	1x cable only Length: ~25 cm	Cable to interconnect the master and the slaves for bench tests	SP005742630
EVAL_A2B_Cable-400	1x cable only Length: ~400 cm	Cable to interconnect the master and the slaves for driving tests	SP005742632

2 Quick start

The following chapter describes the steps to connect, power-up and start the evaluation kit.

1. Connect the ECU master unit A²B output to the A²B connector “A” of the first slave
2. Connect the A²B connector “B” of the first slave to the A²B connector “A” of the second slave
3. Connect all slaves in the same manner (“B” of the previous slave to “A” of the next slave)
4. Connect the 12V power supply line to the A²B master board (Figure 6)
5. Apply power
6. Press the “RESET” button on the AURIX™ lite board (Figure 5)
7. Now the LED ring indicates the live sound level and an audio mix of all 8 microphones is available on the headphone output of the A²B master board. Details can be found in chapter 4.2.

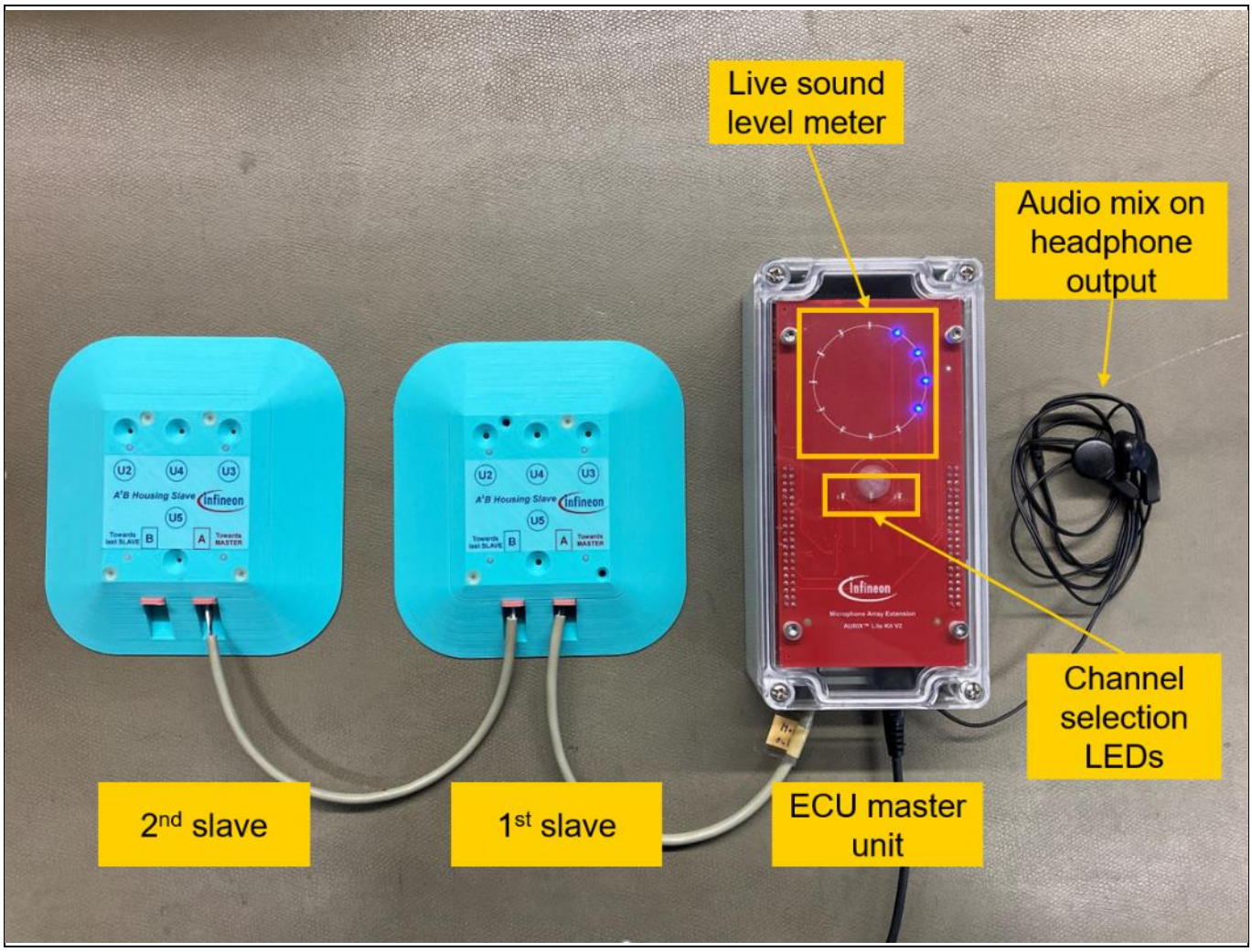

Figure 3 A²B evaluation board in operation with demo software

3 System hardware and functional description

The following chapter describes and explains the different components of the evaluation kit.

3.1 ECU master unit

The master unit consists of three boards.

- AURIX™ lite kit TC375
- A²B master board
- Microphone array extension

For operation, all three boards must be stacked together. The function and operations are described in the chapters below.

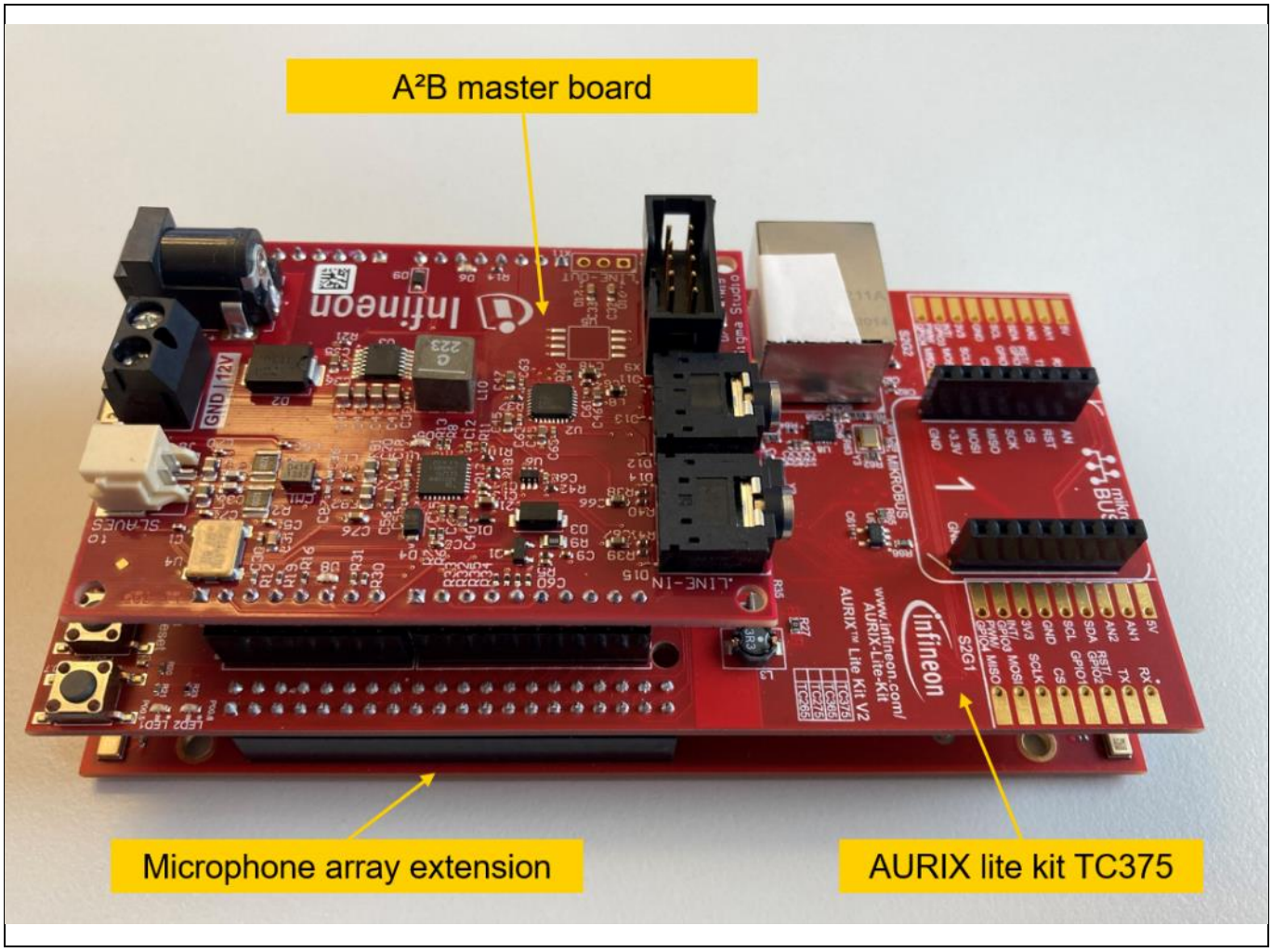

Figure 4 Board stack of the ECU master unit

3.1.1 AURIX™ lite kit

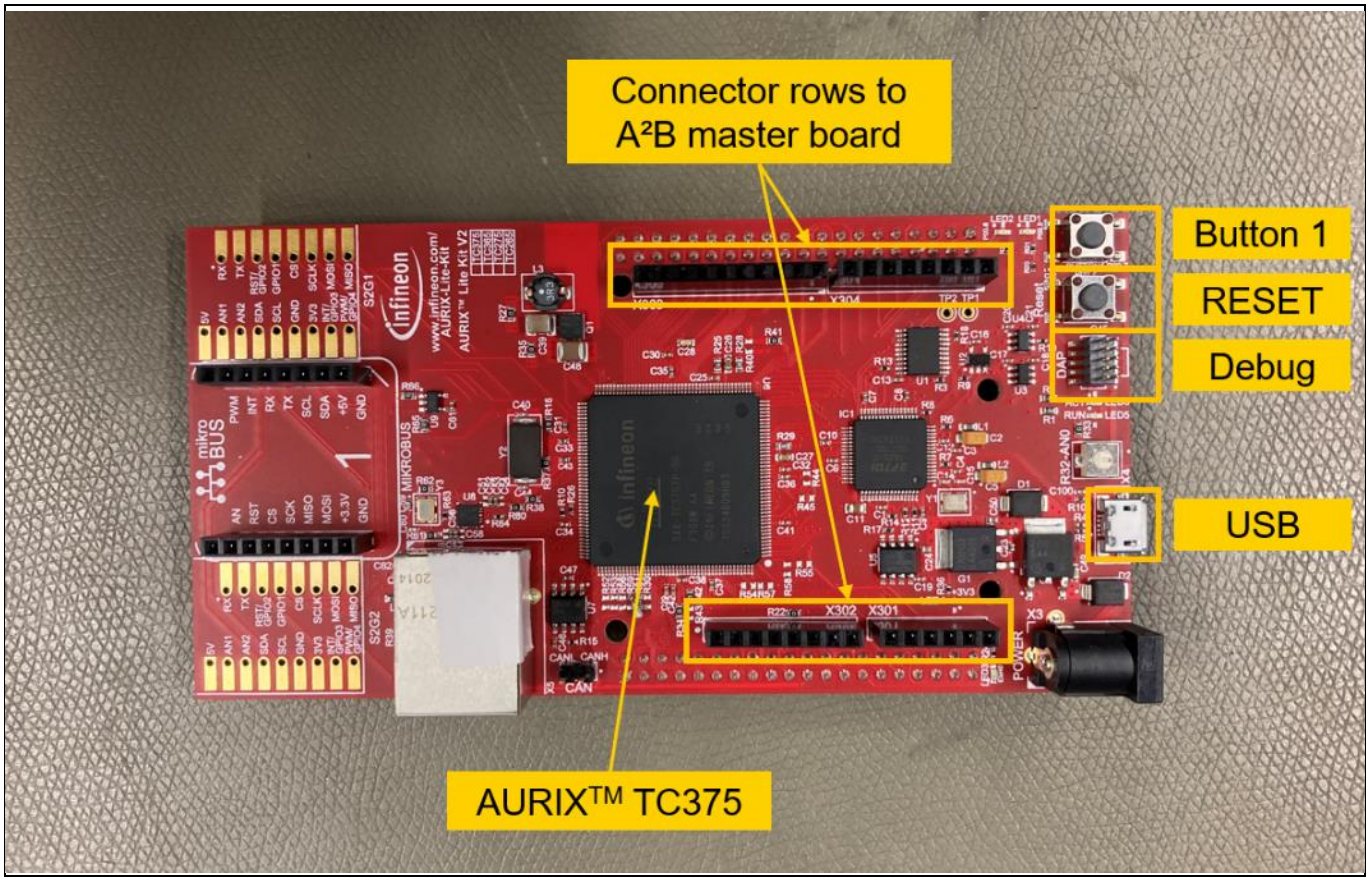

Figure 5 AURIX™ lite kit TC375 and its components as needed for the A²2B eval kit

- RESET:
  - Pressing the reset button will lead to a RESET of the AURIX™.
- Button 1:
  - Multipurpose input for the AURIX™. Example of usage see chapter 4.2.
- Debug and USB
  - Either of the two connectors can be used for programming and debugging purpose. For details, please refer to [1].

Note: The power connector of the AURIX™ lite kit must not be used, as the complete kit is powered via the A²B master board.

3.1.2 A²B master board

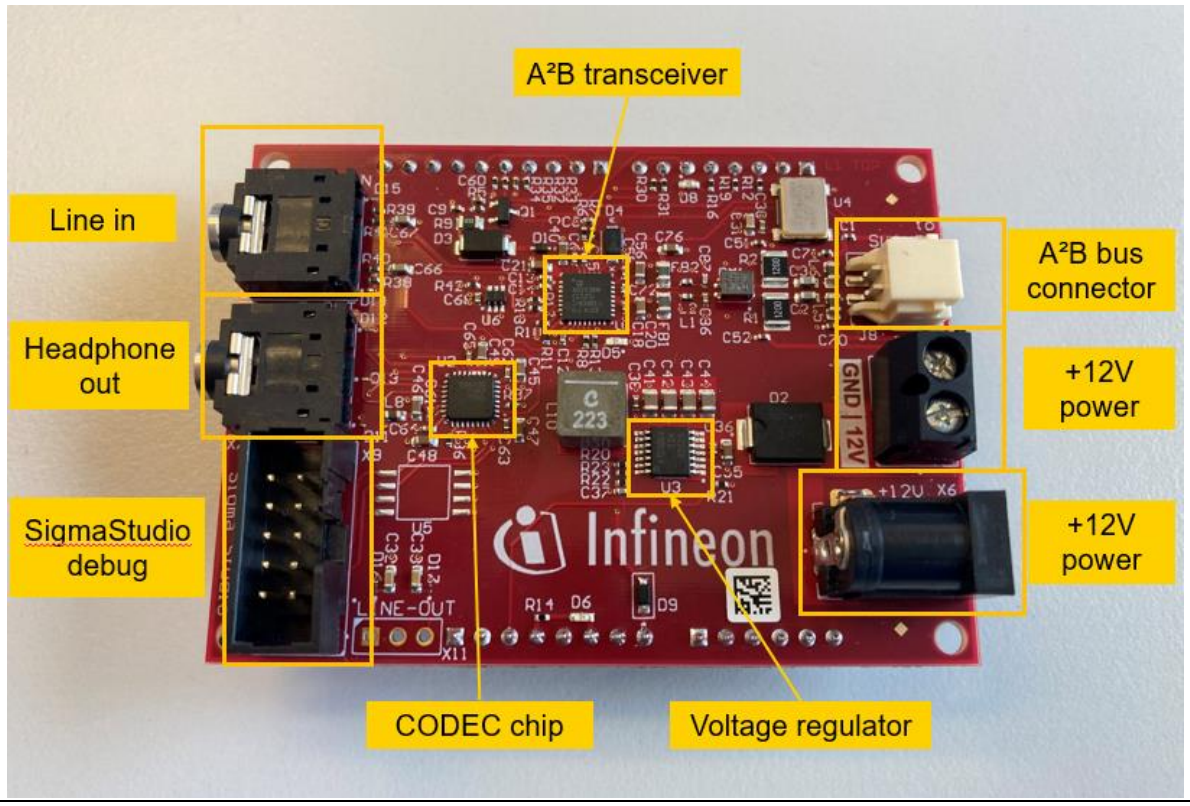

Figure 6 A²B master board and its components

The master board consists of the following components:

- +12V power:
  - Central power connector for the complete evaluation kit
  - The kit can either be powered via the 12V plug and an AC/DC power supply or by connecting the power terminals to a 12V car outlet.
- A²B bus connector:
  - 2-pin DuraClik connector (Molex 502352-0200) for the A²B bus; compatible to most other A²B systems on the market.
- Line-in plug:
  - Audio input for code evaluation
- Headphone plug:
  - Audio output for debugging or connection to recording device
- SigmaStudio connector:
  - Debug connection (optional) to allow configuration of the A²B transceivers via the SigmaStudio® graphical development tool [5].
  - Transceiver configuration can also be added directly in the source code. Predefined configuration file can be downloaded from the AURIX™ code library on GitHub [3].
- A²B transceiver: AD2428WCCSZ01 – Analog Devices
- CODEC chip: ADAU1761BCPZ – Analog Devices
- Voltage regulator: TLS4120D0EPV – Infineon OPTIREG™ Step-Down Regulator

3.1.3 Microphone array extension board

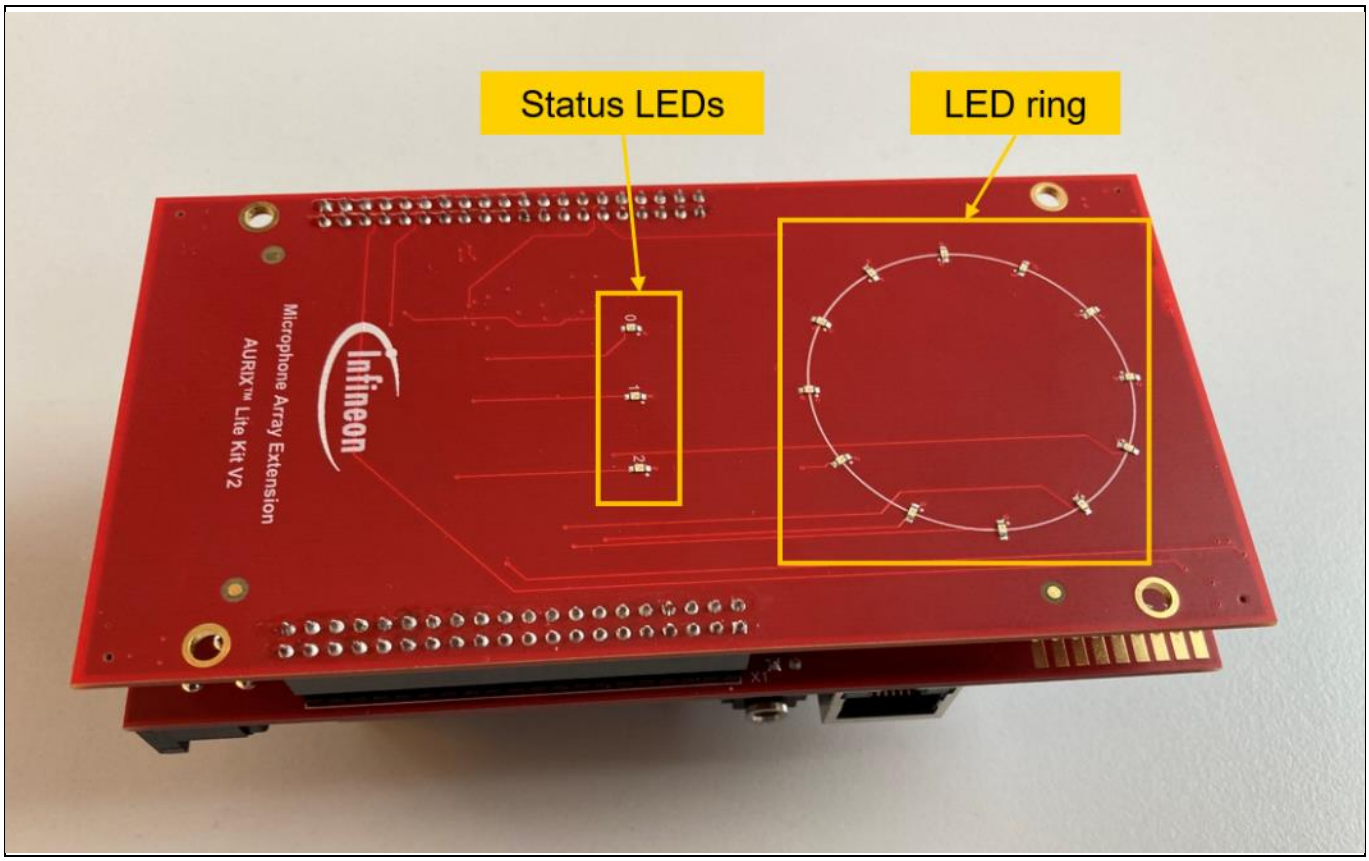

Figure 7 Microphone array extension board and its components

- Status LEDs:
  - Three multipurpose LEDs
  - Controlled via GPIOs from the AURIX™
- LED ring:
  - Twelve multipurpose LEDs (e.g. direction detection)
  - Controlled via GPIOs from the AURIX™

The default function of the different LEDs is described in chapter 4.2.

Details about the board can be found here: [2]

3.2 Microphone slave module

3.2.1 Slave PCB

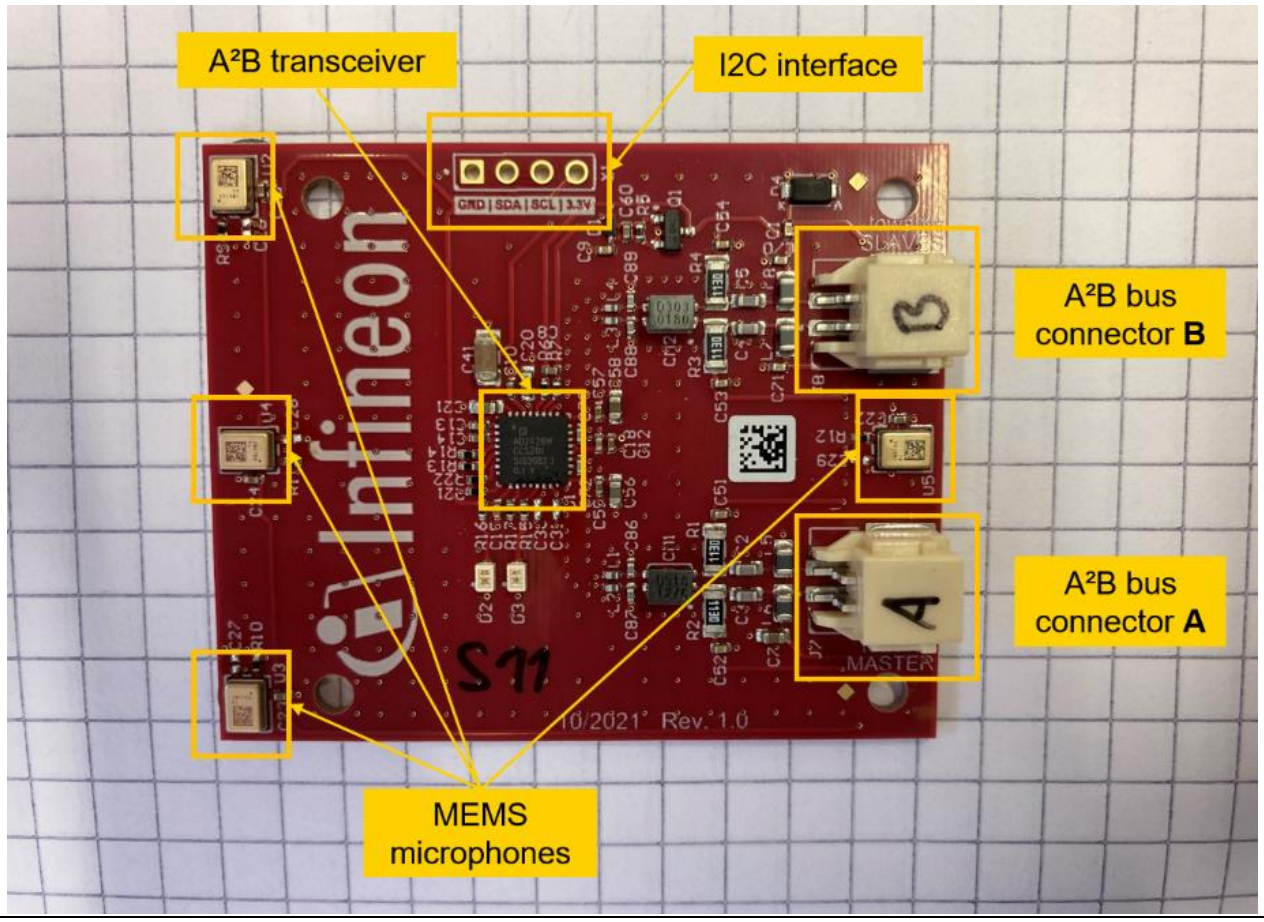

Figure 8 Microphone slave PCB and its components

The microphone slave PCB is equipped with four XENSIV™ high performance microphones. The A²B transceiver can be configured, which microphone channels to transmit to the ECU master unit via the A²B bus.

- MEMS microphones: Automotive qualified XENSIV™ digital MEMS microphones IM67D130A [4]
- A²B transceiver: AD2428WCCSZ01 – Analog Devices
- A²B bus connector:
    - **Connector A**: connection towards master
    - **Connector B**: connection towards last slave
    - 2-pin DuraClik connector (Molex 502352-0200) for the A²B bus; compatible to most other A²B systems on the market.
- I2C interface: Optional connection for configuring of the A²B transceiver

3.2.2 Slave housing

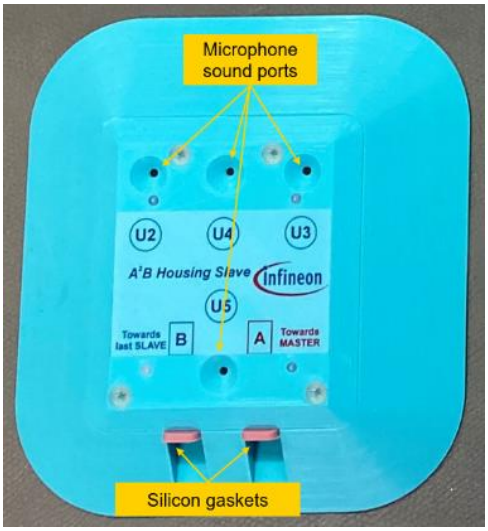

Figure 9 Slave housing

- The magnetic slave housing allows easy mounting to all metal surfaces (e.g. car chassis) due to strong magnets
- Protective membranes under the sound port protects the MEMS microphone from dust and water. See also Figure 10.

Note: The protective membranes have an influence on the frequency response of the system. They can be removed if needed, but then care must be taken to avoid particles or water to enter the microphone sound port.

- Silicon gaskets around the connection cables to protect for intruding water
- Conical shaped sound ports for the microphones for improved frequency response
- Chamfered side walls to reduce air turbulences during driving tests

Attention: Make sure the metal surface underneath the slave is clean to avoid scratches on the lacquer when mounting on a test car.

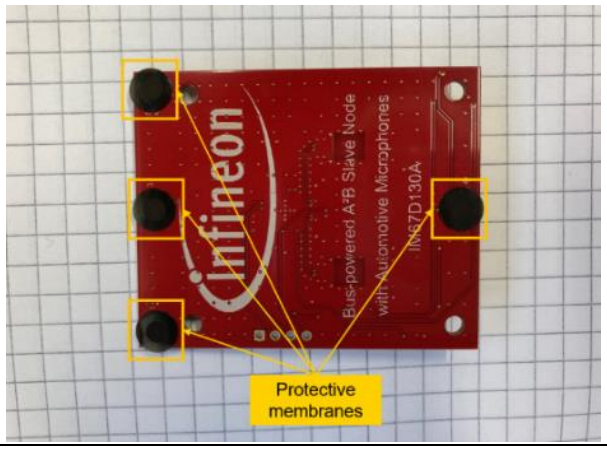

Figure 10 Protective membranes on the backside of the slave PCB

3.3 Cables

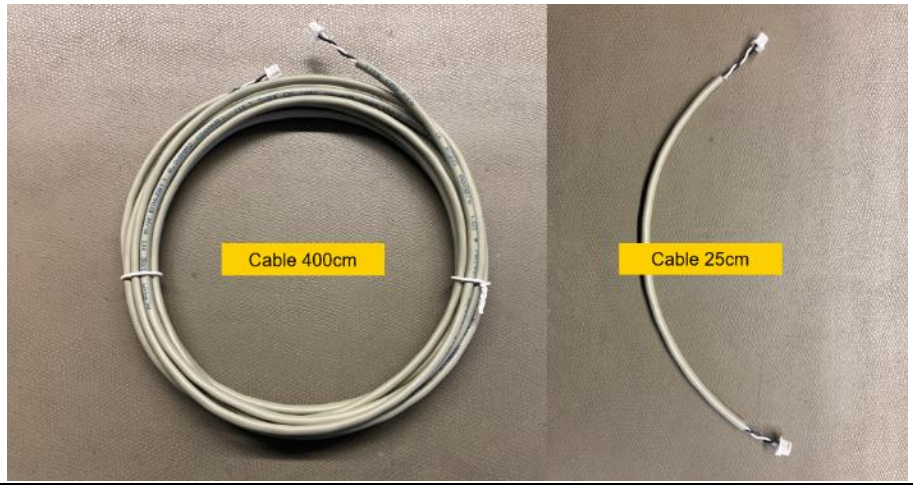

Figure 11 Cables for connection between ECU master unit and the slave boards

Cables to interconnect the master and the slaves can be ordered in different length. See also order information in Table 2.

The cables are equipped with the 2-pin DuraClik connectors (Molex 502351-0200).

4 Software

4.1 General info

- The PDM data from the digital MEMS microphones is filtered into a PCM audio signal on the A²B transceiver. The audio data are then transferred to the ECU master unit via the A²B bus.
- The transceiver on the master board sends the data in an 8 channel TDM stream to the AURIX™. A conept drawing of the I²S/TDM emulation and a timing diagram of the TDM stream are shown in Figure 12 and Figure 13. For further details please refer to [2].
- Inside the AURIX™, the data are stored in 8 different buffers where the customer algorithm can access them for further processing.
- The transceivers on the slave modules can be individually configured, which microphone channels should be transmitted to the master.
- Sample code and different slave / microphone configurations can be found here [3].

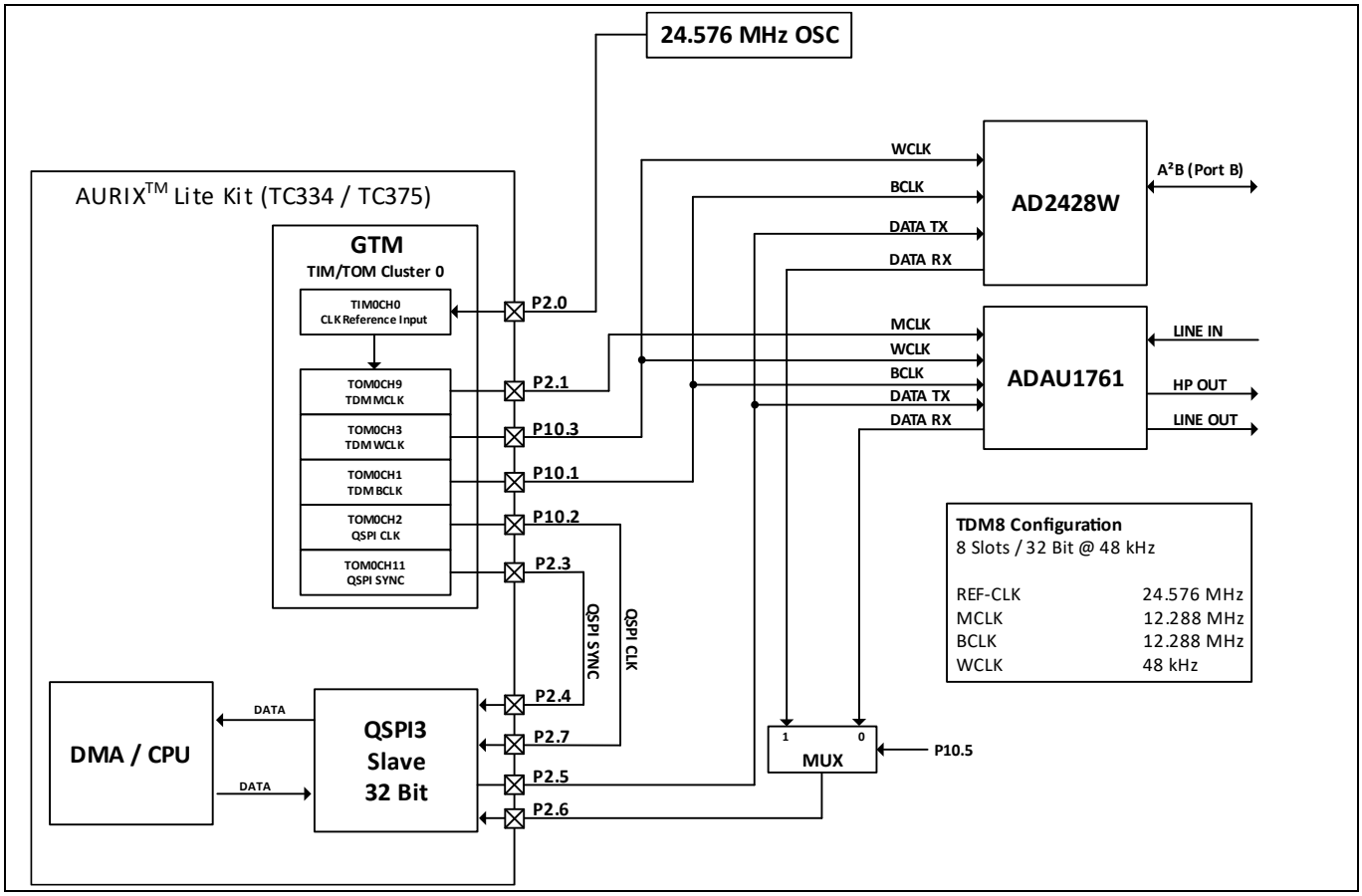

Figure 12 Concept of the I²S emulation of the TDM stream

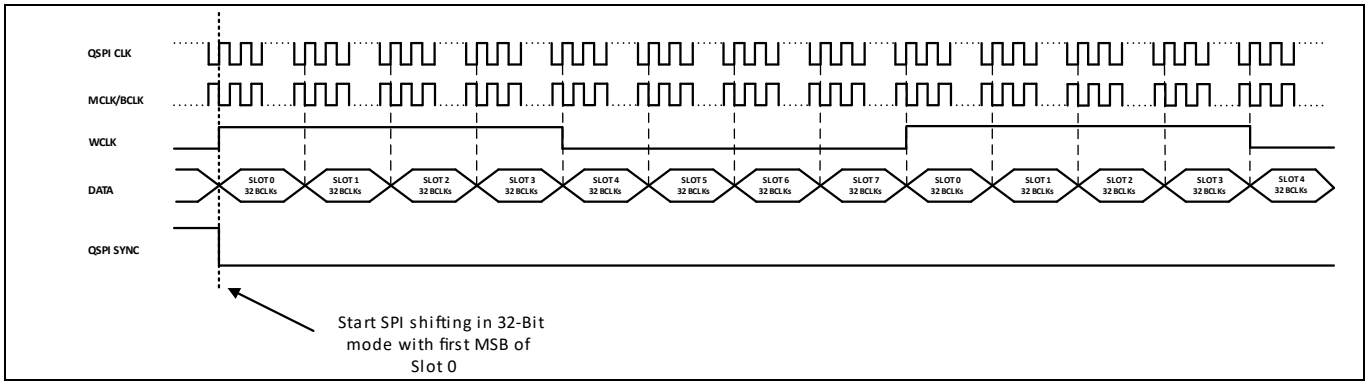

Figure 13 Timing diagram of the 8 channel TDM stream

4.2 Demo software installed on the AURIX™

The evaluation kit is delivered with a preinstalled software. The following chapter describes the functions of the demo software.

Note: The configuration might vary, depending on the order placed.

4.2.1 Realtime audio loop back

The system is configured to read the audio data from 8 microphones from 2 slave modules connected.

On the headphone-output one can hear a stereo-mix of all 8 microphone-channels in real-time.

Note: If more than two slaves are connected, only the first two slaves in the daisy chain will be active.

4.2.2 Live level meter

The LED ring of the microphone extension board are set up as a live level meter of the 8 different microphone channels.

- The three status LED's are showing in binary-count, which microphone-channel is selected to show the live-level in the LED ring. See Figure 7.
- The channel selection can be changed by pushing the Button 1 on the AURIX™ board. See Figure 5.
- The LEDs are having a level-distance of 3dB.

5 System design

5.1 A²B master PCB

5.1.1 Schematics

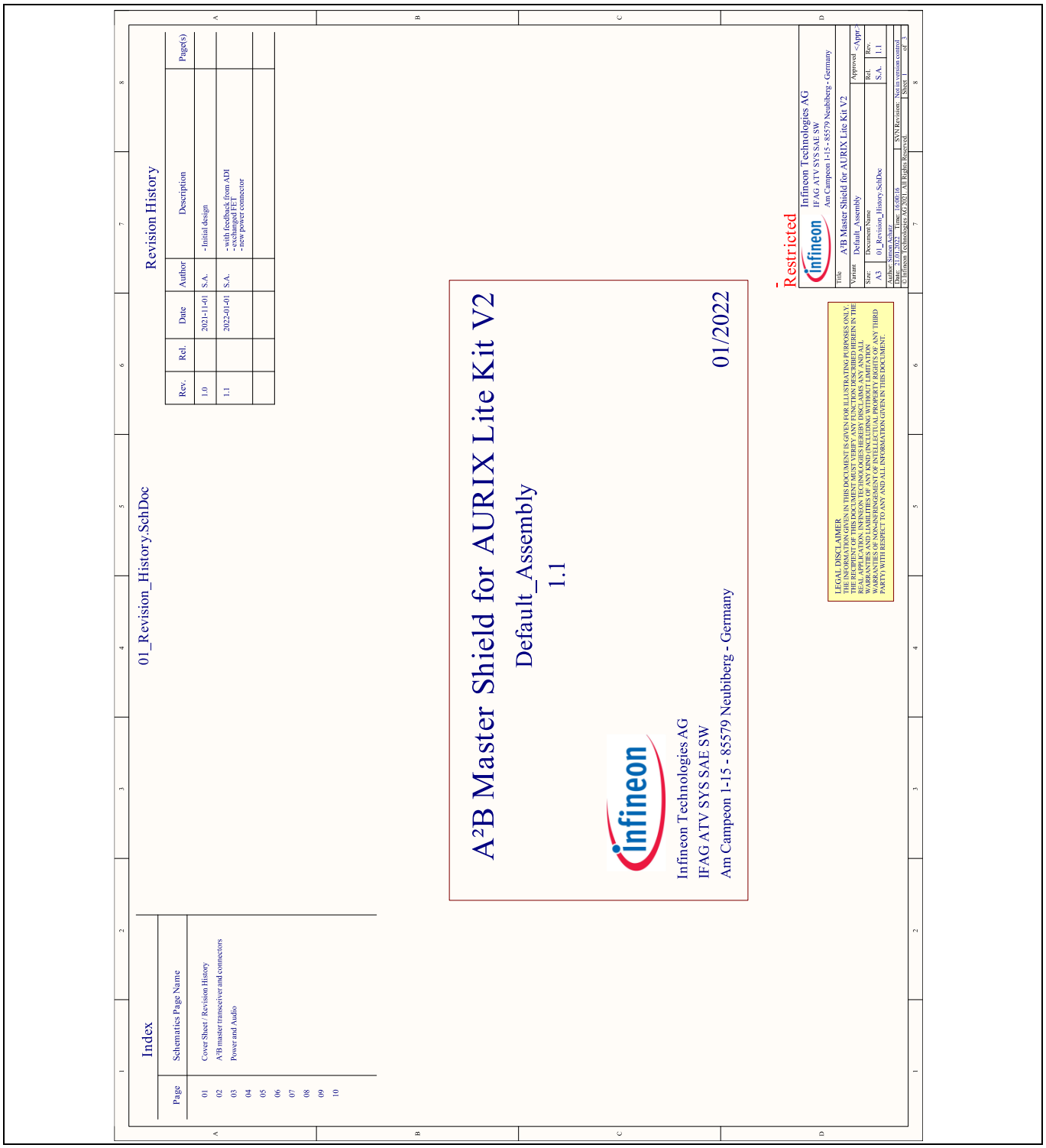

Figure 14 **A²B master board: Schematic – page 1 of 3**

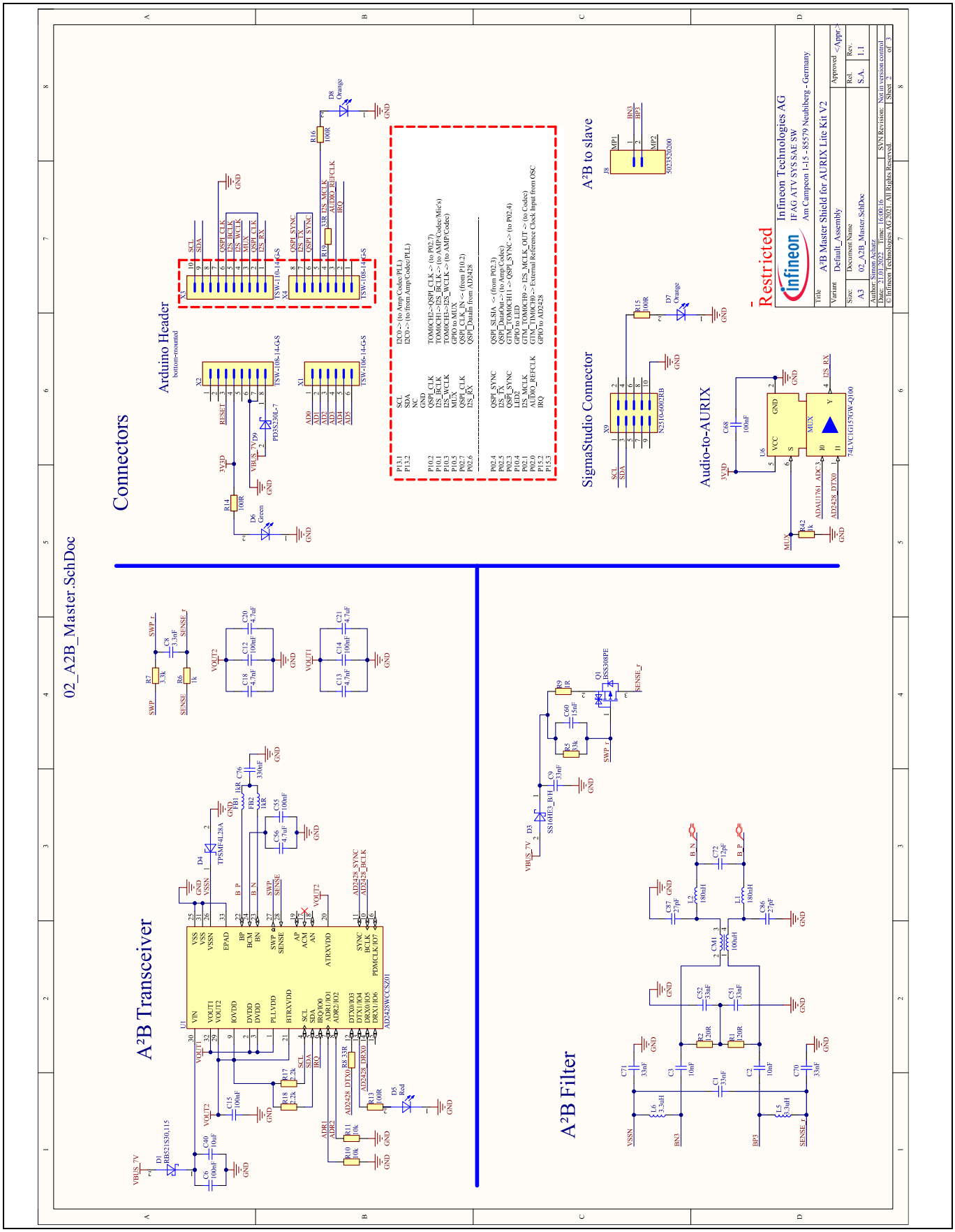

Figure 15 **A²B master board: Schematic – page 2 of 3**

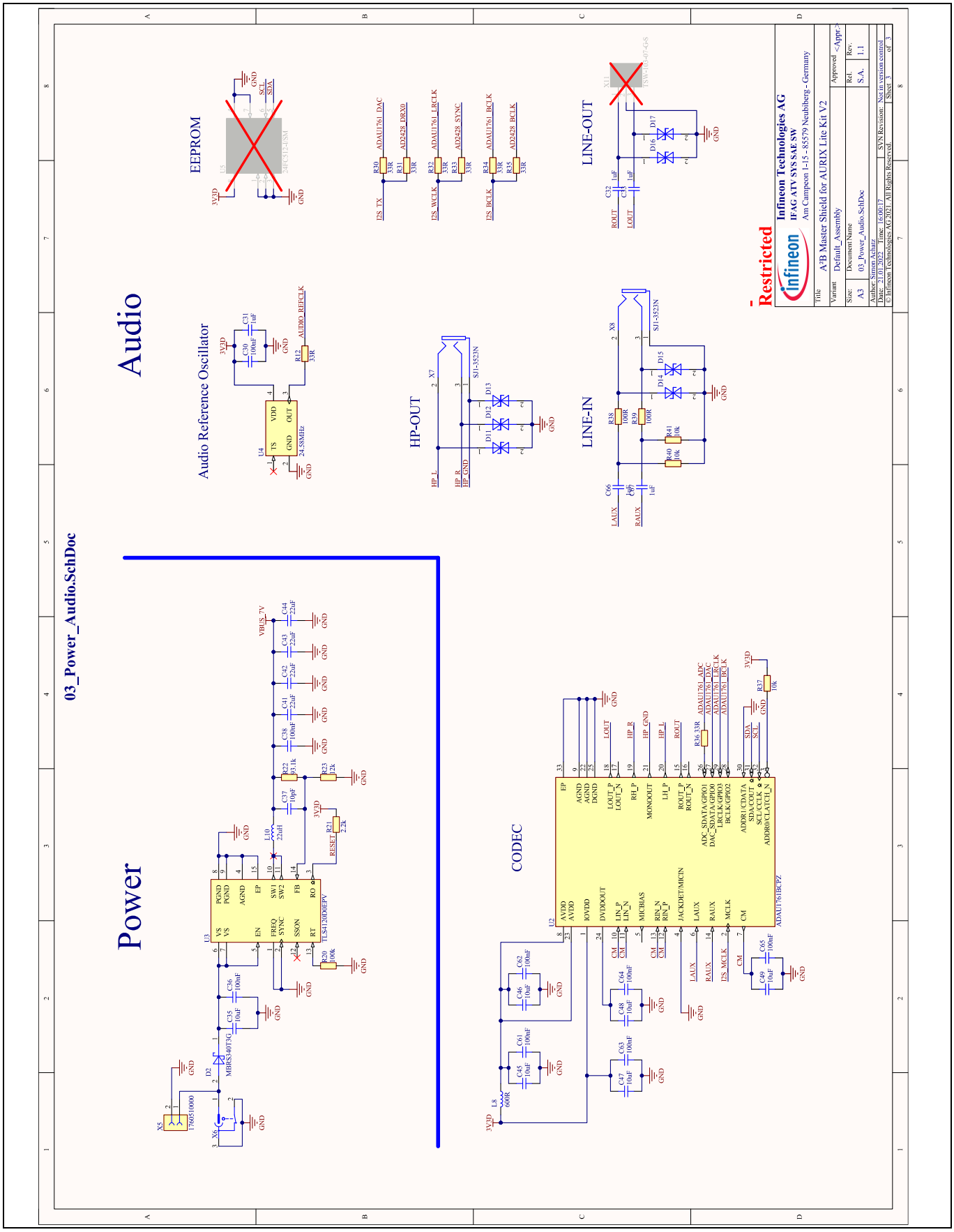

Figure 16 **A²B master board: Schematic – page 3 of 3**

5.1.2 Placement

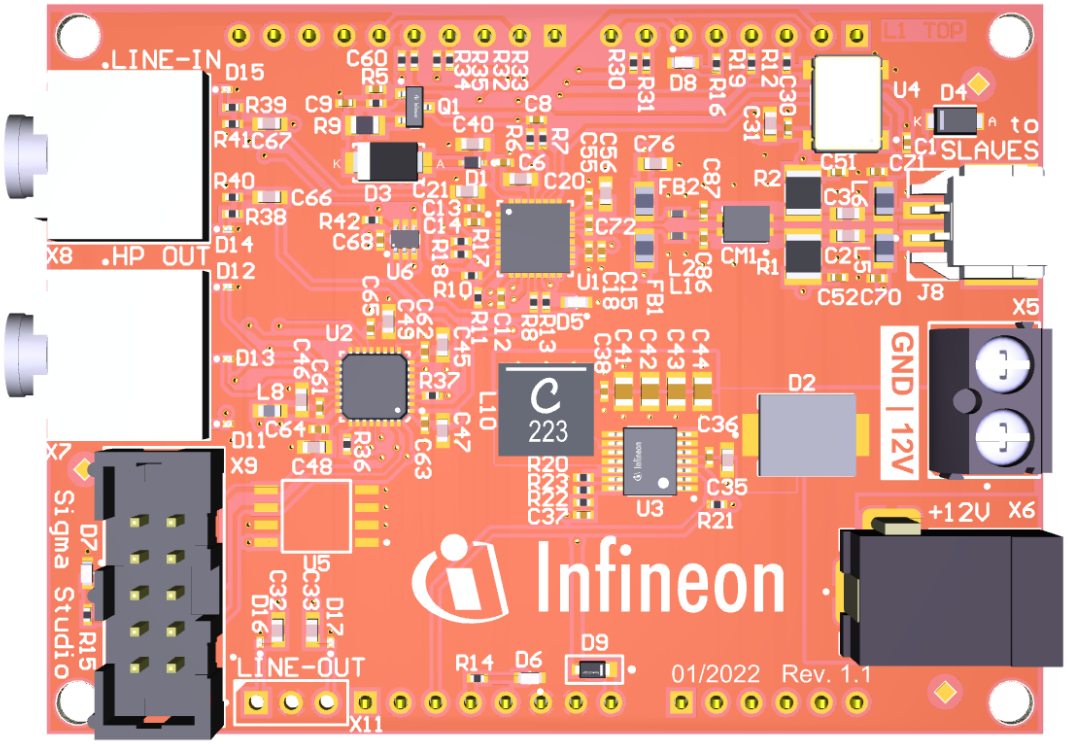

Figure 17 A²B master board: Component placement TOP

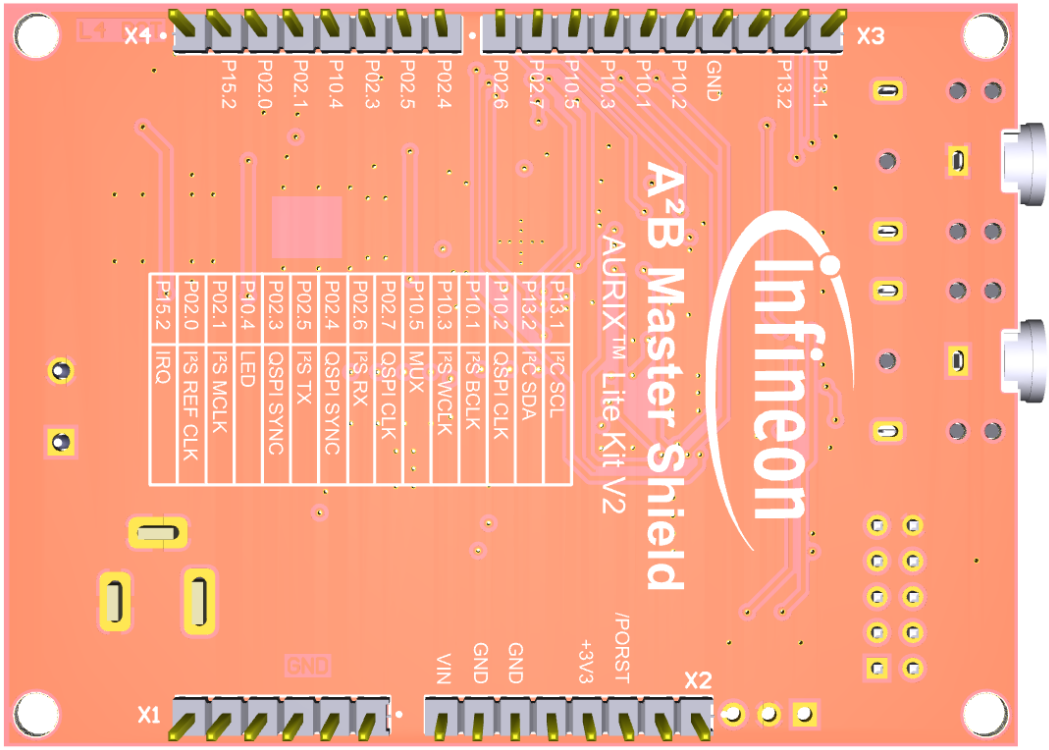

Figure 18 A²B master board: Component placement BOTTOM

5.2 Microphone slave PCB

5.2.1 Schematics

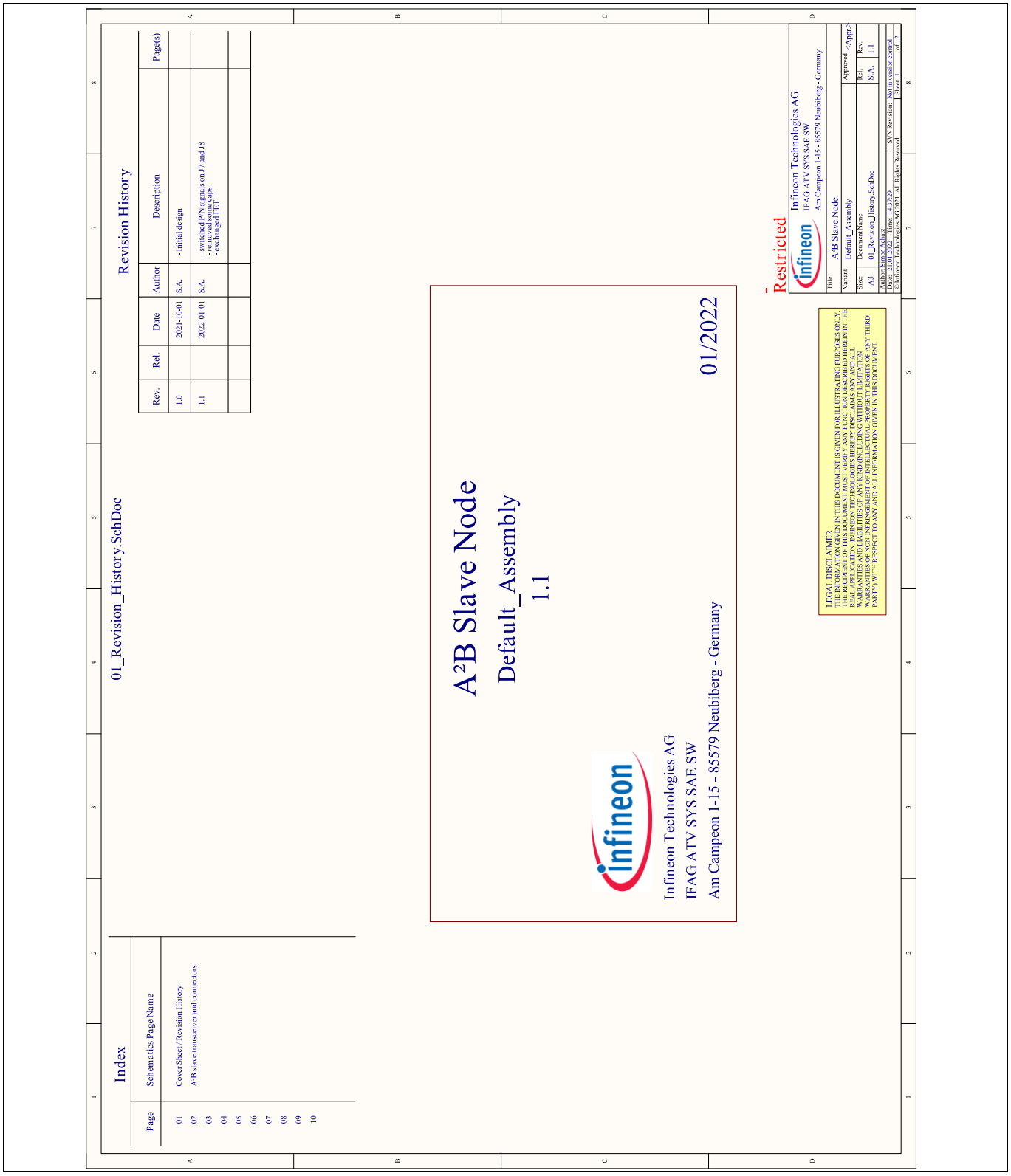

Figure 19 A²B slave PCB: Schematic – page 1 of 2

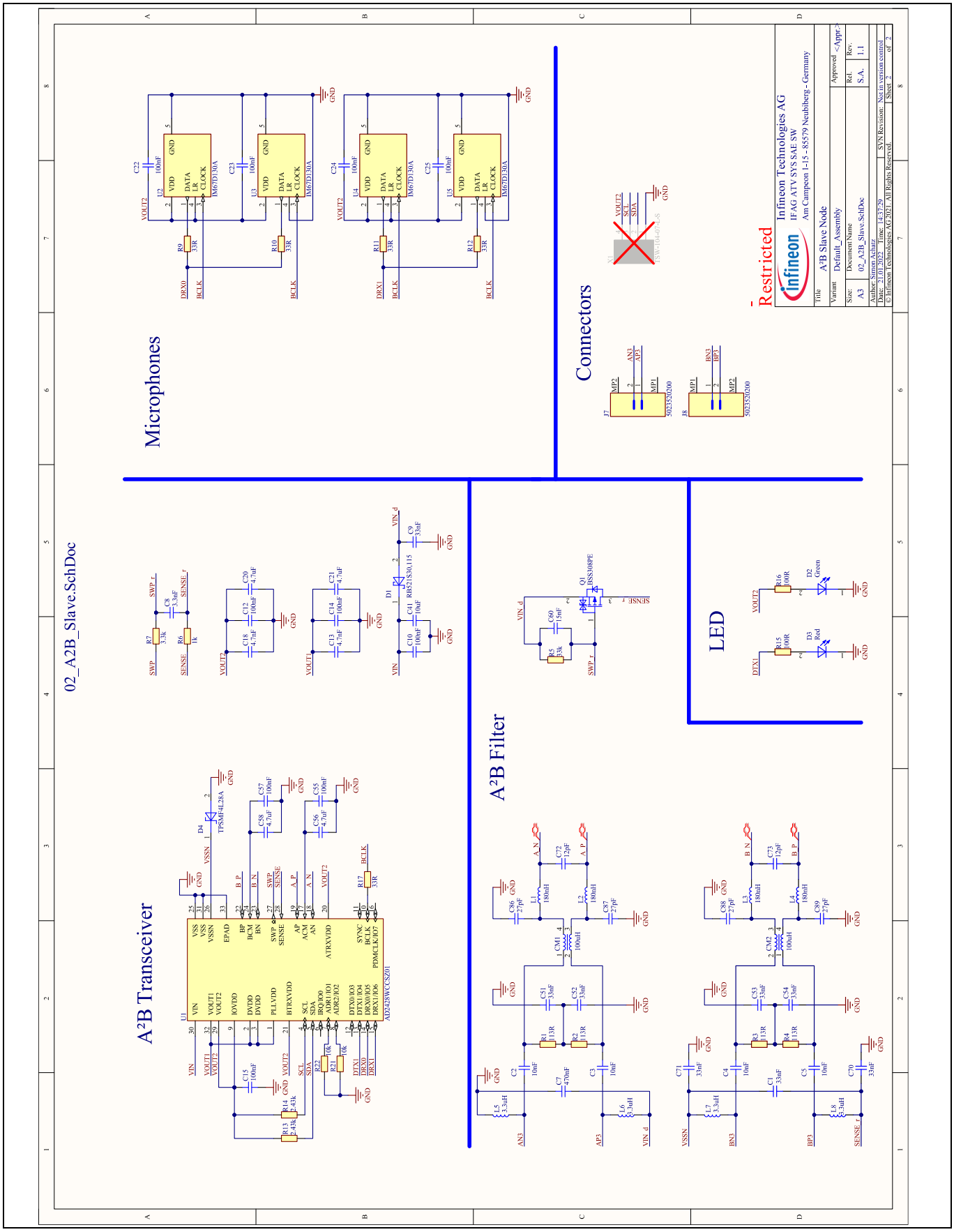

Figure 20 **A²B slave PCB: Schematic – page 2 of 2**

5.2.2 Placement

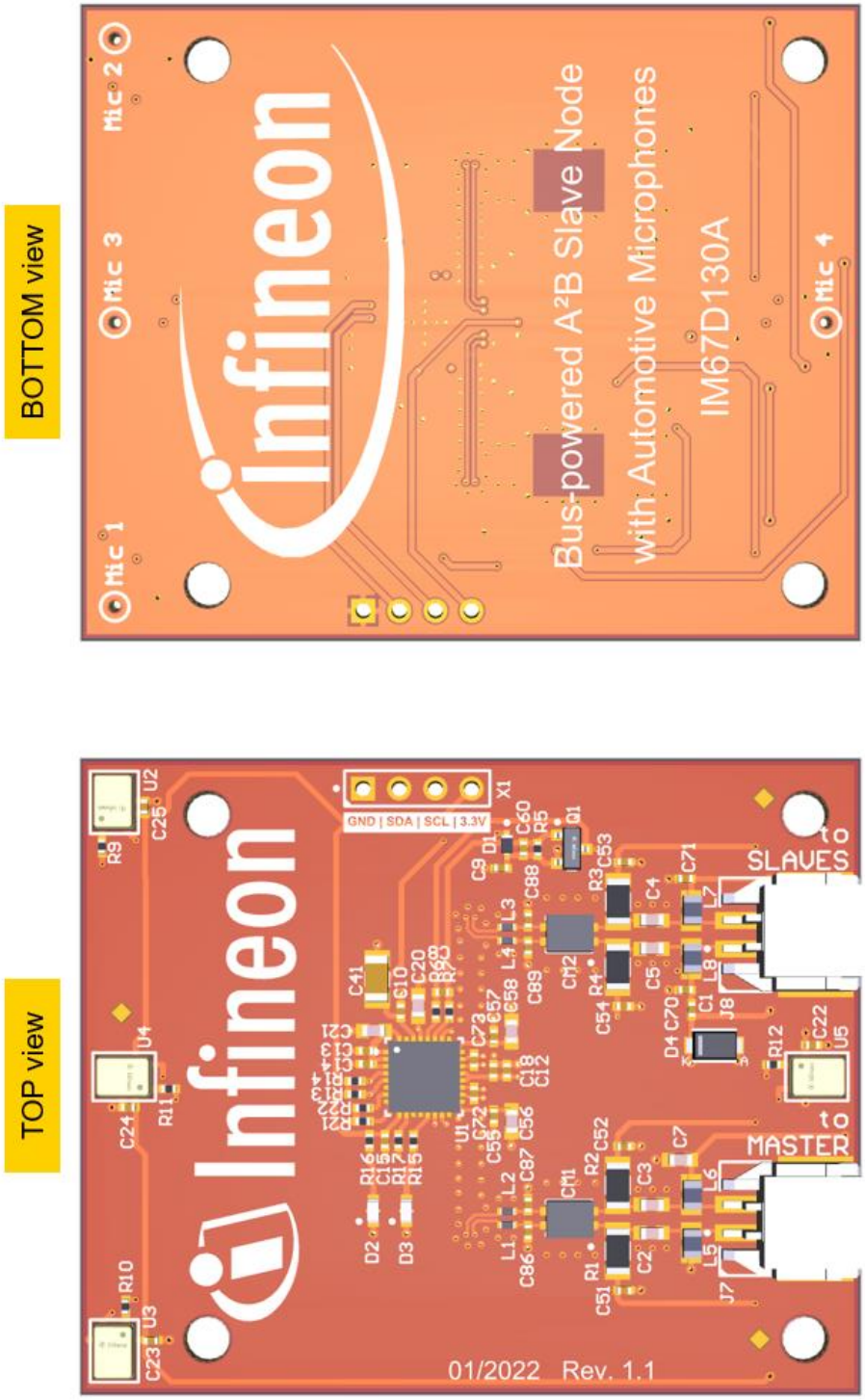

Figure 21 **A²B slave PCB: Component placement TOP and BOTTOM**

5.3 Microphone array extension PCB

5.3.1 Schematics

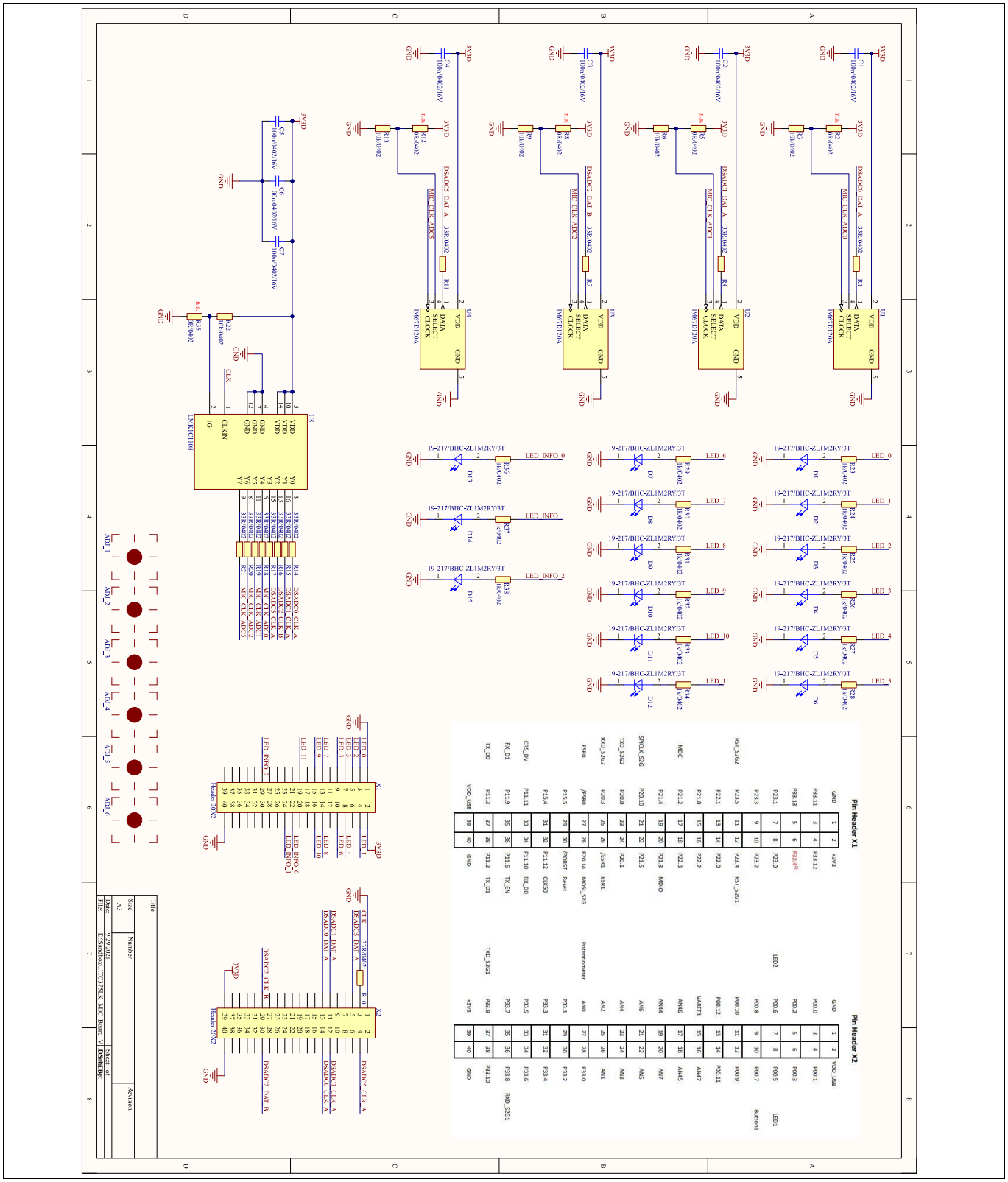

Figure 22 Microphone array extension board: Schematic – page 1 of 1

5.3.2 Placement

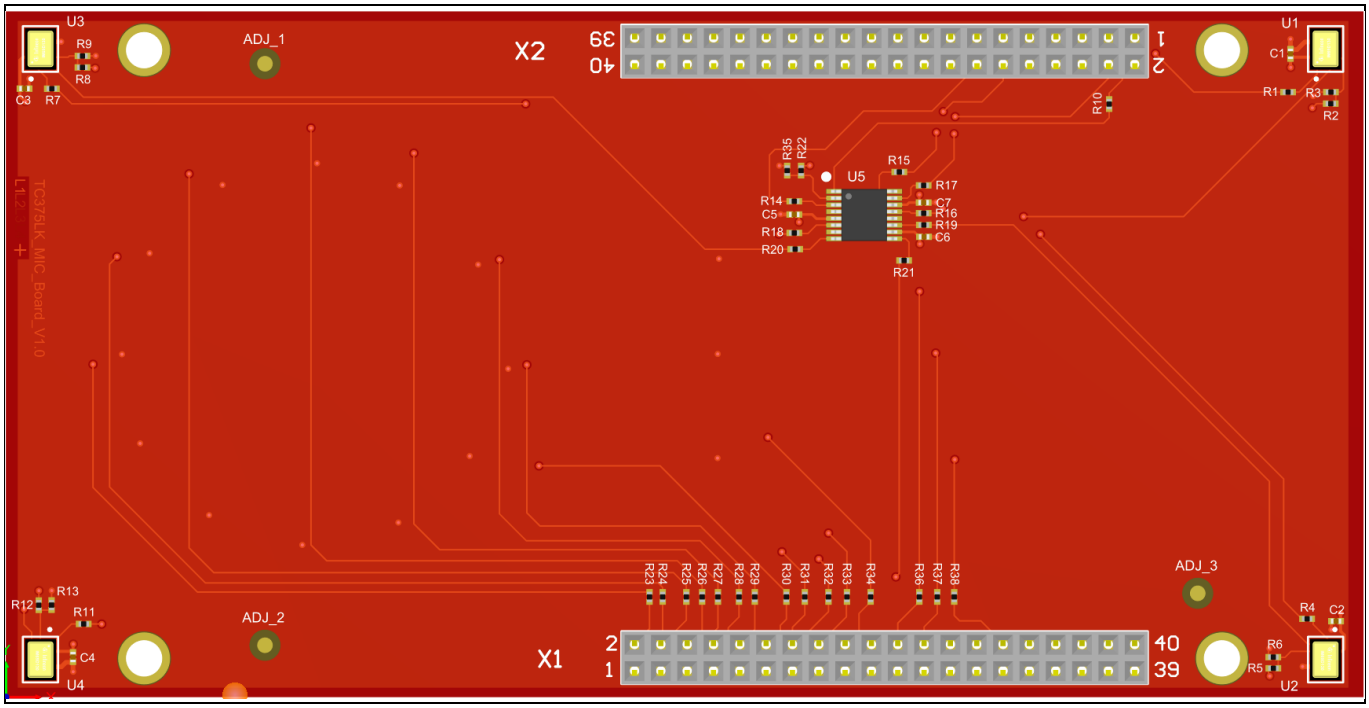

Figure 23 Microphone array extension board: Component placement TOP

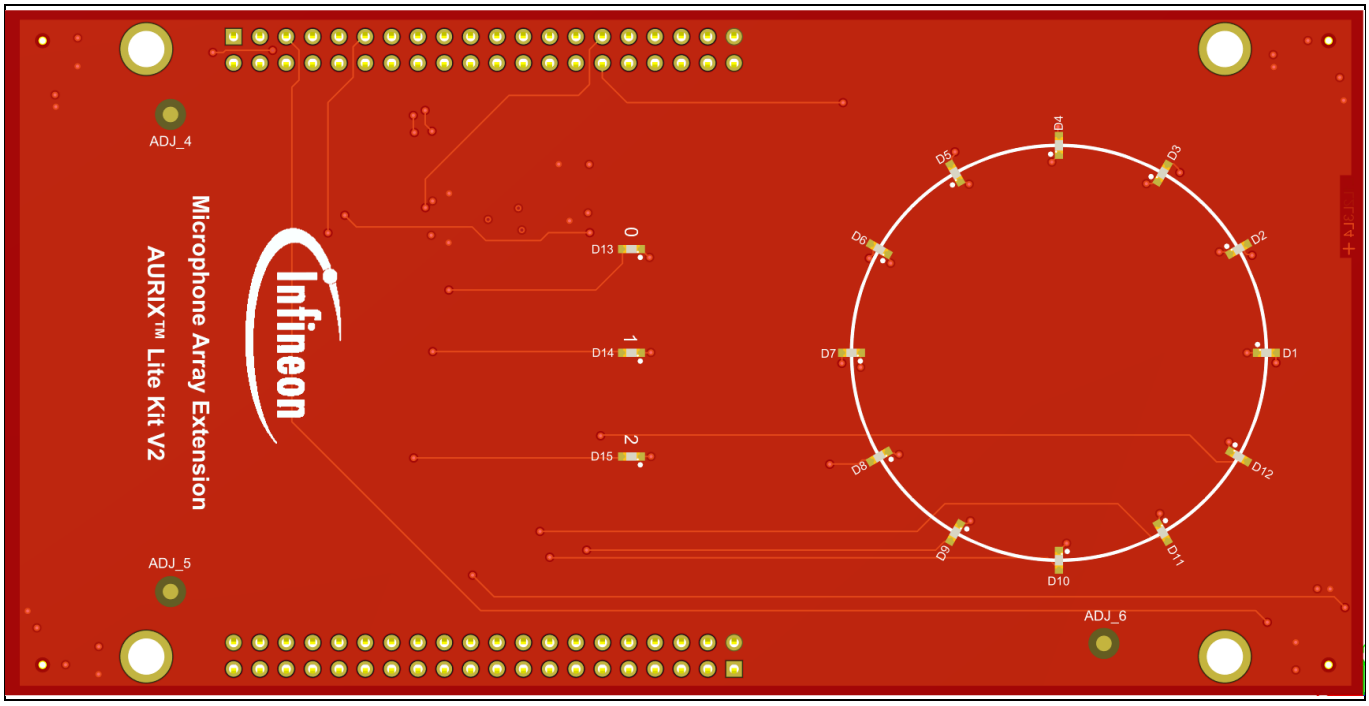

Figure 24 Microphone array extension board: Component placement BOTTOM

6 Appendices

6.1 Abbreviations and glossary

Table 3 Abbreviations

Abbreviation	Meaning
µC	Microcontroller
A^2B	Automotive Audio Bus interface from Analog Devices
ANC	Active noise cancellation
AURIX™	Automotive microcontroller family from Infineon
GPIO	General purpose input / output
IM67D130A	Automotive qualified MEMS microphone from Infineon
LDO	Low drop-out voltage regulator
LED	Light-emitting diode
Master	Main A^2B transceiver with interface to the microcontroller
MEMS	Micro-electro-mechanical-system
Slave	A^2B transceiver controlled by the master transceiver
SPL	Sound pressure level
TC375	Microcontroller from the AURIX™ family
TDM	Time-division-multiplex

References

[1] Infineon Technologies AG, AURIX™ lite kit V2, Board User's Manual, Revision 2.1; https://www.infineon.com/cms/en/product/evaluation-boards/kit_a2g_tc375_lite/

[2] Infineon Technologies AG, Audio Application Kit, Kit User's Manual; https://github.com/Infineon/Aurix_AudioAppKit/blob/master/Documentation/Board_Users_Manual_AURIX_Audio_AppKit_V1_0.pdf

[3] Infineon Technologies AG, AURIX™ code library on GitHub; https://github.com/Infineon/Aurix_AudioAppKit

[4] Infineon Technologies AG, IM67D130A datasheet; https://www.infineon.com/cms/de/product/sensor/mems-microphones/mems-microphones-for-automotive/

[5] Analog Devices, SigmaStudio® Graphical development tool; https://www.analog.com/en/design-center/evaluation-hardware-and-software/software/ss_sigst_02.html#software-overview

Revision history

Document revision	Date	Description of changes
Rev. 1.00	2022-02-21	• First released version
Rev. 1.10	2022-05-05	• All: Editorial changes • Table 2: Name of Aurix™ base board corrected • Reference [2]: Link to Audio Application Kit modified • Chapter 4.1: Info about TDM stream added

Trademarks
All referenced product or service names and trademarks are the property of their respective owners.

Edition 2022-05-05

Published by

Infineon Technologies AG

81726 Munich, Germany

© 2022 Infineon Technologies AG.
All Rights Reserved.

Do you have a question about this document?

Email: erratum@infineon.com

Document reference

User guide

WARNINGS
Due to technical requirements products may contain dangerous substances. For information on the types in question please contact your nearest Infineon Technologies office.

Except as otherwise explicitly approved by Infineon Technologies in a written document signed by authorized representatives of Infineon Technologies, Infineon Technologies' products may not be used in any applications where a failure of the product or any consequences of the use thereof can reasonably be expected to result in personal injury.