CY8CKIT-049-41xx PSoC® 4 PROTOTYPING KIT QUICK START GUIDE

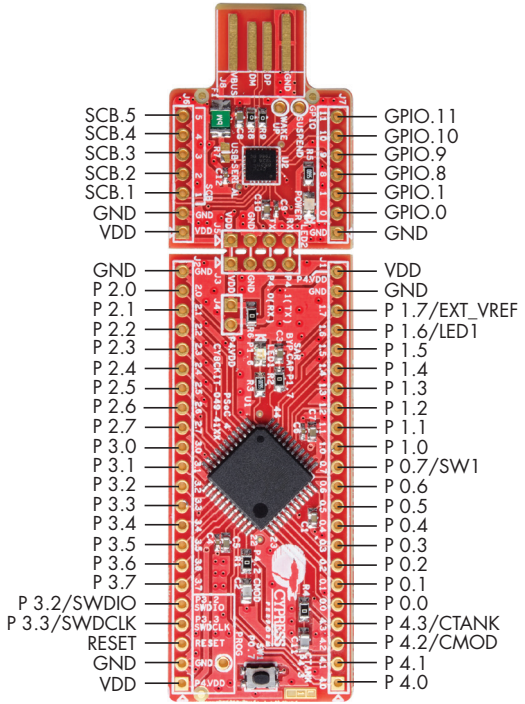

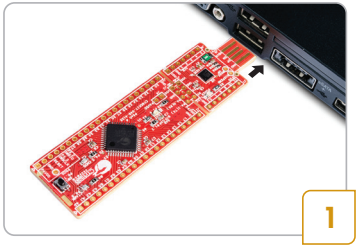

- Connect the board to your computer using the USB connector

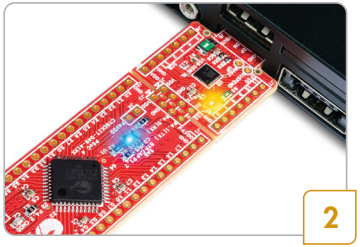

- Amber LED indicates power on
- Blue LED on the board Blinks

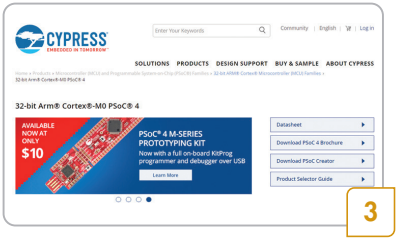

For more information on the kit, please go to the following web page:

www.cypress.com/CY8CKIT-049-41xx

Thank you for supporting PSoC®!

© 2014-2018 Cypress Semiconductor Corporation. All rights reserved.
All trademarks or registered trademarks referenced herein are the properties of their respective owners. Doc.# 001-89349 Rev.*A

PSoC® Rocks!