BLUETOOTH® LOW ENERGY PIONEER KIT



1. BLE Pioneer Baseboard preloaded with CY8CKIT-143A PSoC® 4 BLE 256KB Module
2. CY5677 CySmart BLE 4.2 USB Dongle (BLE Dongle)
3. Two proximity sensor wires (5 inches each)
4. Four Jumper Wires (4 inches each)
5. Coin cell (3V CR2032)
6. USB Standard-A to Mini-B cable
7. Quick Start Guide (this document)

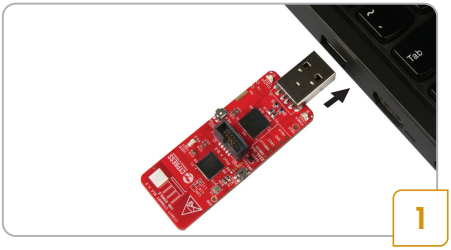

- Connect the dongle to your computer's USB port. This demo does not require installing the drivers for Windows 8 or earlier versions. Refer to Kit Guide for Windows 8.1 or later

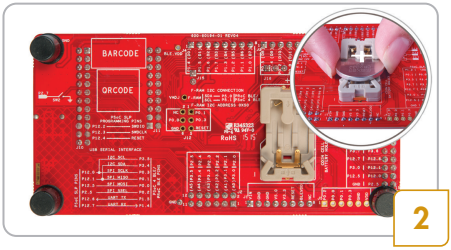

- Insert the 3-V coin cell (included with the kit) into the coin cell holder on the rear side of the baseboard

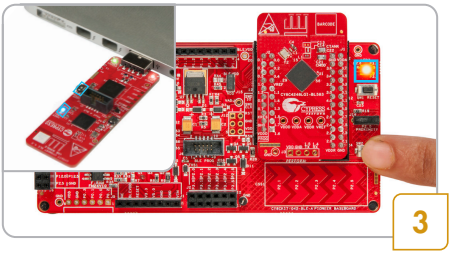

- Press the button SW2 on both the dongle and the baseboard. The red LED on the baseboard and the blue LED on the dongle will stay on for three seconds before turning off, indicating a Bluetooth low energy connection between the two boards

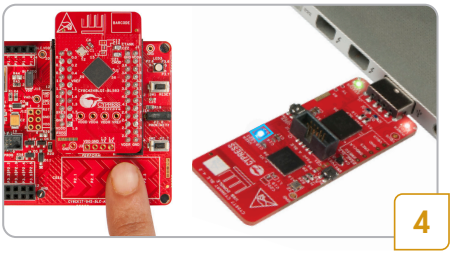

- Move your finger over the CapSense® slider on the baseboard to control the brightness of the blue LED on the dongle

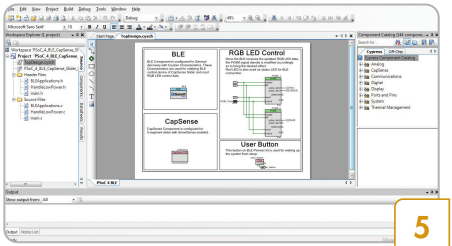

5

- Download and install the PSoC Creator™ IDE, BLE Pioneer Kit code examples, documents, and hardware design files from www.cypress.com/CY8CKIT-042-BLE-A

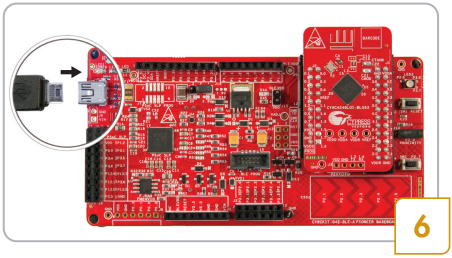

6

- To debug your PSoC Creator project, connect the baseboard with the PSoC 4 BLE module to your computer with a USB cable
- Refer to Chapter 4 of the Kit Guide for additional information on code examples

Note: If you are evaluating this demo near another BLE Pioneer Kit that is advertising (when using the default out-of-box firmware), the dongle may connect to the other baseboard instead. In this case, press the reset button (SW1) on both the dongle and baseboard of your kit, then repeat step 3 to retry connection between the two

Feature List and Pinout Description for CySmart USB Dongle

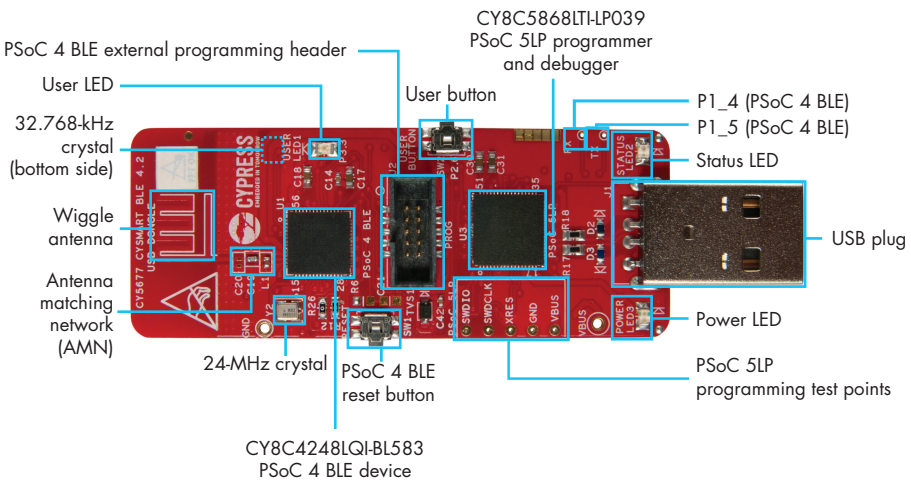

Feature List and Pinout Description for PSoC 4 BLE 256KB Module

PSoC 4 BLE - A single chip solution with a 48-MHz ARM® Cortex®-M0, BLE 4.2 radio, CapSense, programmable analog (12-bit ADC, 2 Current DACs, 2 Low Power Comparators, 4 Low Power Opamps) and programmable digital peripherals (4 Timer/Counter/PWMs, 4 Universal Digital Blocks, 2 Serial Communication Blocks)

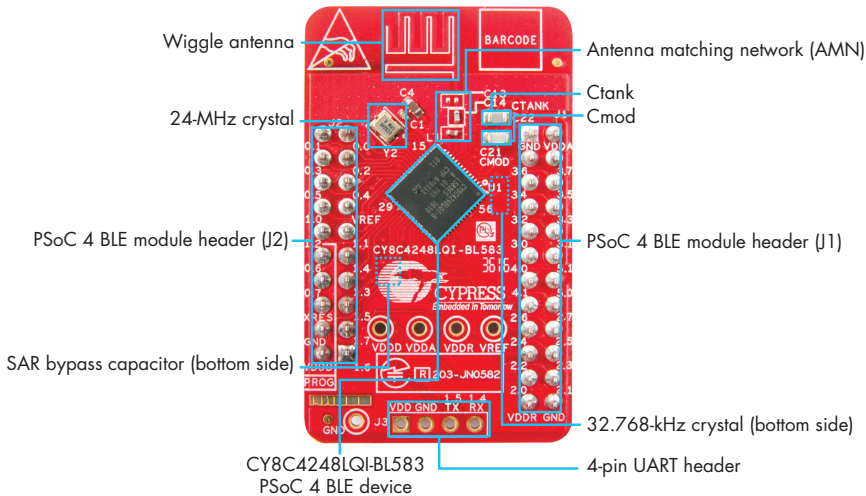

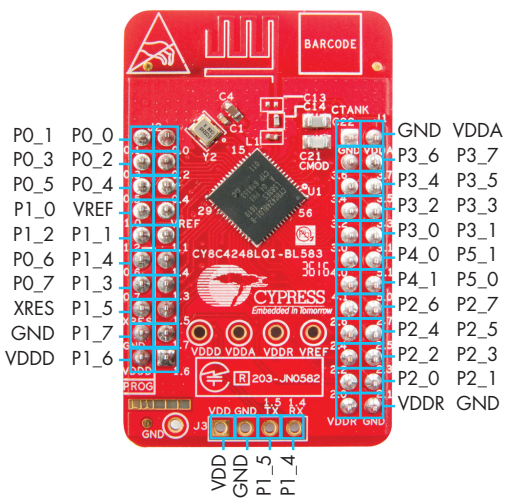

BLUETOOTH® LOW ENERGY PIONEER KIT

Feature List and Pinout Description for BLE Pioneer Baseboard

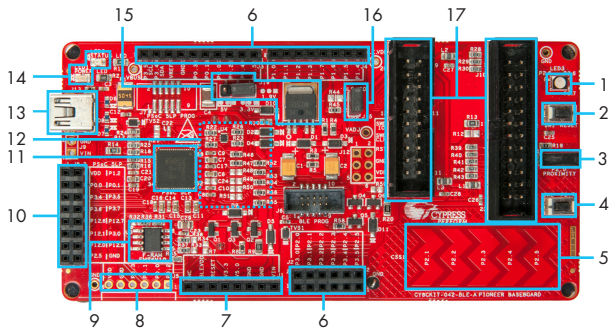

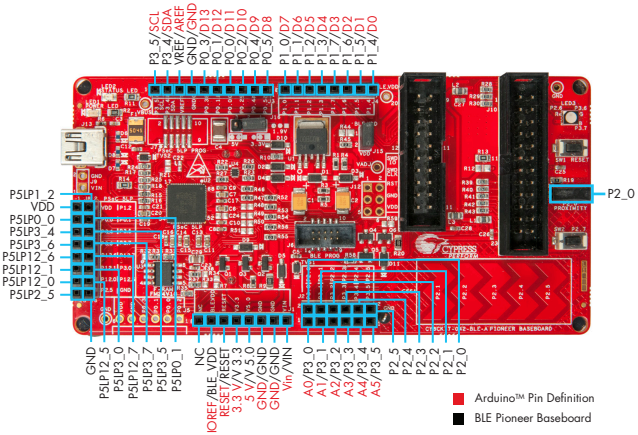

1. RGB LED
2. BLE device reset button
3. CapSense proximity header
4. User button
5. CapSense slider
6. Arduino compatible I/O Headers (J2/J3/J4)
7. Arduino-compatible power header (J1)
8. Digilent® Pmod™-compatible I/O header (J5)
9. Cypress F-RAM 1 Mb (FM24V10-G)
10. PSoC 5LP I/O header (J8)
11. PSoC 5LP programmer and debugger (CY8C5868LTI-LP039)
12. Coin cell holder (bottom side)
13. USB connector (J13)
14. Power LED and Status LED
15. System power supply jumper (J16) - LDO 1.9 V~5 V
16. BLE power supply jumper / current measurement (J15)
17. BLE module headers (J10/J11)

For the latest information about this kit and to download kit software and hardware files, visit www.cypress.com/CY8CKIT-042-BLE-A

© 2016 - 2018 Cypress Semiconductor Corporation. All rights reserved.
All trademarks or registered trademarks referenced herein are the properties of their respective owners.
Doc.#: 002-11473 Rev.*C

CYPRESS EMBEDDED IN TOMORROW™