CY8CKIT-024

CapSense® Proximity Shield Kit Guide

Doc. No. 001-92568 Rev. *B

Cypress Semiconductor
198 Champion Court
San Jose, CA 95134-1709
http://www.cypress.com

© Cypress Semiconductor Corporation, 2014-2017. This document is the property of Cypress Semiconductor Corporation and its subsidiaries, including Spansion LLC (“Cypress”). This document, including any software or firmware included or referenced in this document (“Software”), is owned by Cypress under the intellectual property laws and treaties of the United States and other countries worldwide. Cypress reserves all rights under such laws and treaties and does not, except as specifically stated in this paragraph, grant any license under its patents, copyrights, trademarks, or other intellectual property rights. If the Software is not accompanied by a license agreement and you do not otherwise have a written agreement with Cypress governing the use of the Software, then Cypress hereby grants you a personal, non-exclusive, nontransferable license (without the right to sublicense) (1) under its copyright rights in the Software (a) for Software provided in source code form, to modify and reproduce the Software solely for use with Cypress hardware products, only internally within your organization, and (b) to distribute the Software in binary code form externally to end users (either directly or indirectly through resellers and distributors), solely for use on Cypress hardware product units, and (2) under those claims of Cypress’s patents that are infringed by the Software (as provided by Cypress, unmodified) to make, use, distribute, and import the Software solely for use with Cypress hardware products. Any other use, reproduction, modification, translation, or compilation of the Software is prohibited.

TO THE EXTENT PERMITTED BY APPLICABLE LAW, CYPRESS MAKES NO WARRANTY OF ANY KIND, EXPRESS OR IMPLIED, WITH REGARD TO THIS DOCUMENT OR ANY SOFTWARE OR ACCOMPANYING HARDWARE, INCLUDING, BUT NOT LIMITED TO, THE IMPLIED WARRANTIES OF MERCHANTABILITY AND FITNESS FOR A PARTICULAR PURPOSE. To the extent permitted by applicable law, Cypress reserves the right to make changes to this document without further notice. Cypress does not assume any liability arising out of the application or use of any product or circuit described in this document. Any information provided in this document, including any sample design information or programming code, is provided only for reference purposes. It is the responsibility of the user of this document to properly design, program, and test the functionality and safety of any application made of this information and any resulting product. Cypress products are not designed, intended, or authorized for use as critical components in systems designed or intended for the operation of weapons, weapons systems, nuclear installations, life-support devices or systems, other medical devices or systems (including resuscitation equipment and surgical implants), pollution control or hazardous substances management, or other uses where the failure of the device or system could cause personal injury, death, or property damage (“Unintended Uses”). A critical component is any component of a device or system whose failure to perform can be reasonably expected to cause the failure of the device or system, or to affect its safety or effectiveness. Cypress is not liable, in whole or in part, and you shall and hereby do release Cypress from any claim, damage, or other liability arising from or related to all Unintended Uses of Cypress products. You shall indemnify and hold Cypress harmless from and against all claims, costs, damages, and other liabilities, including claims for personal injury or death, arising from or related to any Unintended Uses of Cypress products.

Cypress, the Cypress logo, Spansion, the Spansion logo, and combinations thereof, WICED, PSoC, CapSense, EZ-USB, F-RAM, and Traveo are trademarks or registered trademarks of Cypress in the United States and other countries. For a more complete list of Cypress trademarks, visit cypress.com. Other names and brands may be claimed as property of their respective owners.

Contents

1. Introduction 6

1.1 Kit Contents 6
1.2 Getting Started 7
1.2.1 Beginner's Resources 7
1.2.2 Hardware Requirements 8
1.2.3 Software Requirements 8
1.2.4 Application Notes and Projects 9
1.3 Technical Support 9
1.4 Acronyms 9
1.5 Document Conventions 10

2. Kit Hardware 11

2.1 Board Details 11
2.2 Theory of Operation 13
2.2.1 Principle of Capacitive Proximity Sensing 13
2.2.2 CY8CKIT-024 System 14
2.3 Functional Description 14
2.3.1 Sensor Pattern 14
2.3.2 Arduino-Compatible Headers 16
2.3.3 Hatch Pattern 18
2.3.4 Slide Switch SW1 18
2.3.5 C_{TANK} Capacitor 18
2.3.6 LEDs 19

3. Example Projects 21

4. Design Support 22

Appendix A: Schematics, Layout, and BOM 23

A.1. Schematics 23
A.2. Board Layout 26
A.3. Bill of Materials 28

Revision History 29

Document Revision History 29

Safety Information

The CapSense® Proximity Shield Kit (CY8CKIT-024) is intended for use as a hardware or software development platform in a laboratory environment. This product is an open-system design, which does not include a shielded enclosure, so it may cause interference with other electrical or electronic devices in close proximity. In a domestic environment, this product may cause radio interference. In such cases, you may be required to take adequate preventive measures. Also, this product should not be used near any medical equipment or RF devices.

Attaching additional wiring to this product or modifying the product operation from the factory default settings may affect its performance and cause interference with other apparatus in the immediate vicinity. If such interference is detected, suitable mitigating measures should be taken.

The CapSense Proximity Shield Kit (CY8CKIT-024), as shipped from the factory, has been verified to meet the requirements of CE as a Class A product.

CE

	CY8CKIT-024 contains ESD-sensitive devices. Electrostatic charges readily accumulate on the human body and any equipment and can discharge without detection. Permanent damage may occur in devices subjected to high-energy discharges. Proper ESD precautions are recommended to avoid performance degradation or loss of functionality. Store unused CY8CKIT-024 boards in the protective shipping package.
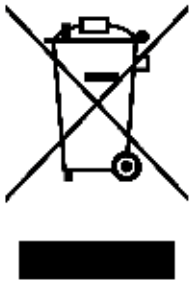	End-of-Life / Product Recycling This product has an end-of-life cycle five years from the date of manufacture mentioned on the back of the box. Please contact your nearest recycler for discarding the product.

General Safety Instructions

ESD Protection

ESD can damage boards and associated components. Cypress recommends that you perform procedures only at an ESD workstation. If an ESD workstation is not available, use appropriate ESD protection by wearing an antistatic wrist strap attached to the chassis ground (any unpainted metal surface) on the board when handling these parts.

Handling Boards

CY8CKIT-024 boards are sensitive to ESD. Hold the board only by its edges. Do not slide the board over any surface

1. Introduction

Thank you for your interest in the CapSense Proximity Shield Kit (CY8CKIT-024). This kit is intended to demonstrate the proximity-sensing capabilities of the CapSense technology in Cypress's PSoC® products.

This kit supports the following proximity-sensing features:

- Large proximity-sensing distance: The kit has a proximity loop with a 10.3-cm diagonal, which, when interfaced with the CY8CKIT-040 kit or CY8CKIT-042 kit, provides a proximity-sensing distance of approximately 10 cm.
- Horizontal and vertical gesture detection: The kit includes four 5.5-cm-long proximity sensors to detect horizontal and vertical gestures at a distance of 2 cm.
- Liquid tolerance: The kit includes a slide switch to select between ground and driven shield for the shield loop on the top layer. The driven shield, along with the recommended CapSense configuration, provides liquid-tolerant proximity sensing. Use the dropper provided with the kit to evaluate the liquid-tolerant performance.

Along with proximity sensors and the shield electrode, this kit includes six LEDs, five of which are arranged in a "+" layout to indicate the proximity-sensing distance and horizontal and vertical gesture detection with visual effects.

This kit guide provides details on the kit contents, hardware, schematics, and BOM. See AN92239 – Proximity Sensing with CapSense for example projects.

1.1 Kit Contents

This kit contains the following, as shown in Figure 1-1:

- CapSense Proximity Shield
- Quick Start Guide
- Liquid Dropper

Figure 1-1: Kit Contents



Inspect the contents of the kit. If you find any part missing, contact your nearest Cypress sales office for help. Go to http://www.cypress.com/go/support for more information on Cypress sales offices and support.

1.2 Getting Started

This section provides details on the hardware requirements, software requirements, and associated application notes for using the CY8CKIT-024 kit with various PSoC 4 devices. Refer to the kit web page for the latest information on using this kit with various PSoC 4 devices. The web page will be updated as new PSoC devices and development kits compatible with are released to the market.

1.2.1 Beginner's Resources

An overview of PSoC devices is available at http://www.cypress.com/psoc. The web page includes a list of PSoC device families, integrated design environments (IDEs), and associated development kits. In addition, refer to the following documents to get started with PSoC 4 devices and CapSense technology:

- AN79953 – Getting Started with PSoC® 4
- Getting Started with CapSense®
- PSoC® 4 CapSense® Design Guide
- AN92239 – Proximity Sensing with CapSense®
- PSoC Creator 101 Training series

1.2.2 Hardware Requirements

CY8CKIT-024 plugs into any Arduino™ hardware-compatible development platforms from Cypress. AN92239 provides example projects targeting the CY8CKIT-040 PSoC 4000 Pioneer Development Kit and CY8CKIT-042 PSoC 4 Pioneer Kit.

Figure 1-2 and Figure 1-3 show how the CY8CKIT-024 kit connects to the CY8CKIT-040 and CY8CKIT-042 kits respectively.

Figure 1-2: CY8CKIT-024 Connected to CY8CKIT-040



Figure 1-3: CY8CKIT-024 Connected to CY8CKIT-042



You can purchase the CY8CKIT-040 kit from http://www.cypress.com/CY8CKIT-040 and the CY8CKIT-042 kit from http://www.cypress.com/CY8CKIT-042.

1.2.3 Software Requirements

The CY8CKIT-024 kit does not have any programmable/configurable device onboard, so it does not need any software for configuration. However, the PSoC device present on baseboards, such as CY8CKIT-040 or CY8CKIT-042, requires firmware, which you can develop with the PSoC Creator IDE (Version 3.0 SP1 or later).

1.2.3.1 PSoC Creator

PSoC Creator allows concurrent hardware and application firmware design of PSoC 3, PSoC 4, and PSoC 5LP systems. PSoC systems are designed using classic, familiar, schematic-capture technology supported by pre-verified, production-ready PSoC Components™.

PSoC Components are analog and digital virtual chips represented by icons that you can drag and drop into a design and configure to suit a broad array of application requirements. You can configure each Component in the rich, mixed-signal Cypress Component Catalog with the Component Customizer tool. These Components include a full set of dynamically generated API libraries. After you have configured the PSoC system, you can write, compile, and debug the firmware within PSoC Creator, or export the firmware to other IDEs such as those from IAR, Keil, and Eclipse.

You can download the latest version of the PSoC Creator software from http://www.cypress.com/psoccreator. Refer to the Release Notes for the minimum and recommended system requirements.

1.2.3.2 PSoC Programmer and Bridge Control Panel

The PSoC Programmer software is used to program the PSoC devices on the CY8CKIT-040 kit and CY8CKIT-042 kit with hex files. The Bridge Control Panel (BCP) software is used to view the CapSense sensor data such as raw count, baseline, and difference count. The BCP software is installed along with PSoC Programmer. You can download PSoC Programmer at http://www.cypress.com/go/psocprogrammer.

1.2.4 Application Notes and Projects

AN92239 contains example projects that demonstrate the following features of the CY8CKIT-024 kit:

- Large proximity-sensing distance (approximately 10 cm)
- Liquid-tolerant proximity sensing
- Gesture detection based on proximity sensing

See the Example Projects section in this application note for details.

1.3 Technical Support

For assistance, go to our support web page (http://www.cypress.com/support) or contact our customer support at +1(800) 541-4736 Ext. 2 (in the USA), or +1 (408) 943-2600 Ext. 2 (International).

1.4 Acronyms

Table 1-1: Acronym Definitions

Acronym	Definition
BCP	Bridge Control Panel
C_F	finger capacitance
C_P	parasitic capacitance
ENIG	electroless nickel immersion gold
GND	Ground
IDE	integrated design environment
SPDT	single pole, dual throw

1.5 Document Conventions

Table 1-2: Document Conventions

Convention	Usage
`Courier New`	Displays file locations, user-entered text, and source code: `C:\ ...cd\icc\`
Italics	Displays file names and reference documentation: Read about the *sourcefile.hex* file in the *PSoC Designer™ User Guide*.
[**Bracketed, Bold**]	Displays keyboard commands in procedures: [**Enter**] or [**Ctrl**] [**C**]
File > Open	Represents menu paths: File > Open > New Project
Bold	Displays commands, menu paths, and icon names in procedures: Click the **File** icon and then click **Open**.
Times New Roman	Displays an equation: 2 + 2 = 4

2. Kit Hardware

2.1 Board Details

The CY8CKIT-024 kit contains the following components:

- Proximity sensors:
  - One proximity loop for large proximity-sensing distance (approximately 10 cm)
  - Four proximity sensors for horizontal and vertical gesture detection
- 3-mm overlay for liquid tolerance
- One slide switch to evaluate the difference in performance between ground and driven shield
- Six blue-color LEDs to implement visual effects
- Arduino-compatible headers to interface with Cypress PSoC Pioneer Kits
- Driven-shield pin on Arduino-compatible headers for large proximity-sensing distance/liquid tolerance

Figure 2-1 through Figure 2-3 show the bottom and top views of CY8CKIT-024.

Figure 2-1: Bottom View of CY8CKIT-024

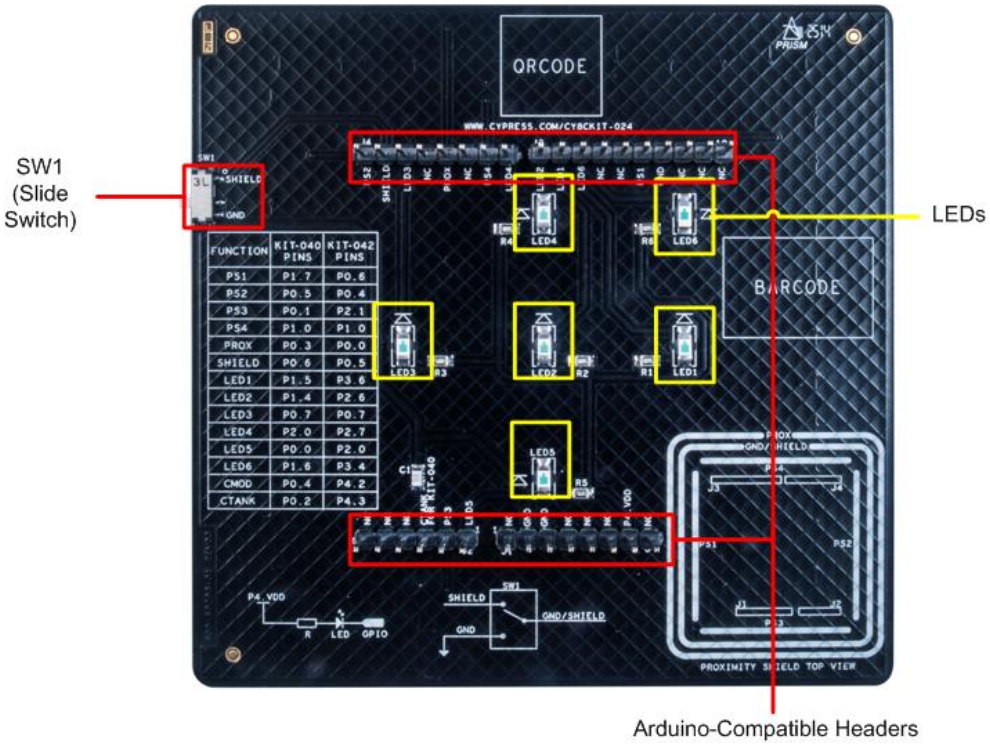

Figure 2-2: Top View of CY8CKIT-024



Figure 2-3: Top View of CY8CKIT-024 Without Overlay[1]

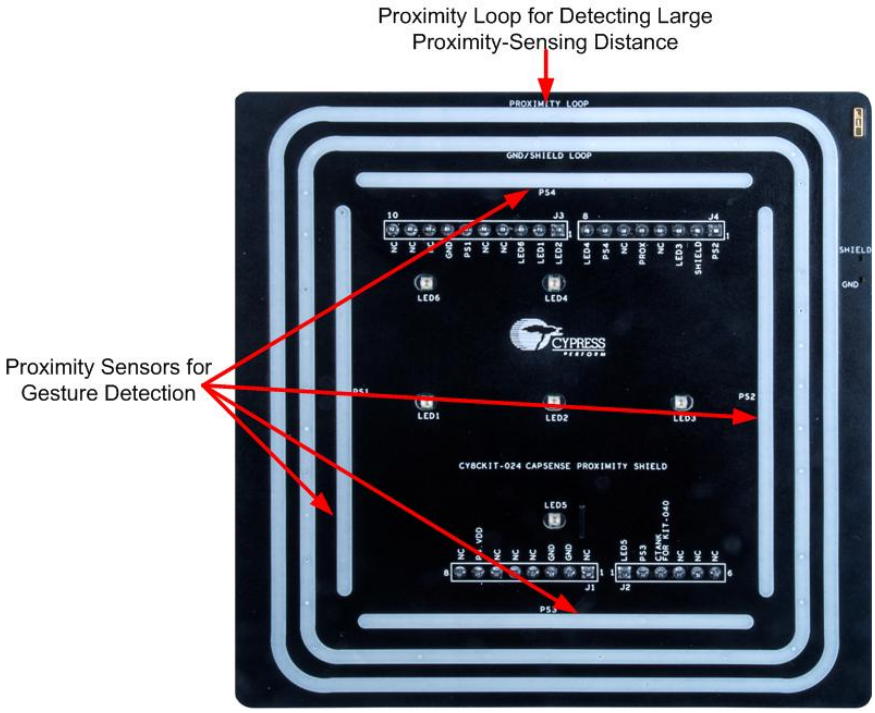

[1] Note that CY8CKIT-024 is shipped with the overlay stuck on the board. Figure 2-3 is provided only to show the proximity sensors' location on the kit.

2.2 Theory of Operation

This section provides a high-level description of the principle of proximity sensing and describes where the CY8CKIT-024 kit and PSoC devices fit in a capacitive proximity-sensing system.

2.2.1 Principle of Capacitive Proximity Sensing

Capacitive proximity sensors are conductive (usually copper/indium tin oxide) pads or traces laid on a nonconductive material like PCB or glass. The intrinsic capacitance of the PCB trace or pads or other connections to a capacitive sensor results in a sensor parasitic capacitance (C_P). When a capacitive proximity sensor is excited by a voltage source, an electric field is created around the sensor. A small number of electric field lines couple with the nearby ground, while most of the electric field lines are projected into the nearby space, as Figure 2-4 shows.

When a target object such as a finger, hand, or conductive object approaches the sensor, the electric field couples with it and adds a small amount of finger capacitance (C_F) to the existing C_P, as Figure 2-5 shows. The capacitive proximity-sensing technique involves measuring this change in the capacitance of a proximity sensor when a target object approaches the sensor.

Figure 2-4: Capacitance and Electric Field of a Capacitive Proximity Sensor

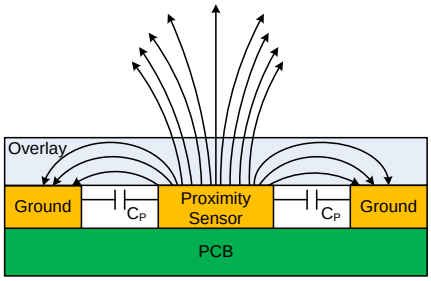

Figure 2-5: Added Capacitance (C_F) When a Hand Approaches a Proximity Sensor

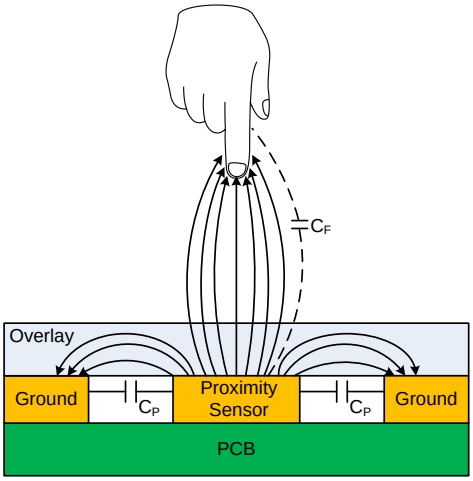

2.2.2 CY8CKIT-024 System

The CY8CKIT-024 kit contains five capacitive proximity sensors laid out in a shape and pattern that allow a large proximity-sensing distance and gesture detection. These sensors can be interfaced with PSoC 4 devices present on Cypress PSoC Pioneer Kits through Arduino-compatible headers, as Figure 2-6 shows.

Figure 2-6: CY8CKIT-024 System Block Diagram

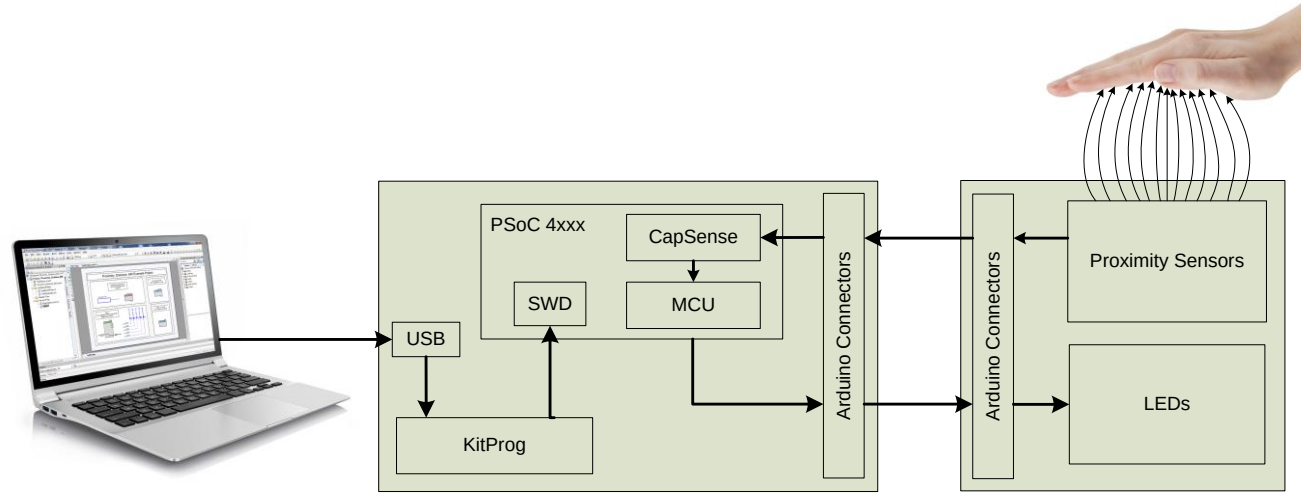

In the CY8CKIT-024 system, the CapSense circuitry in the PSoC device on the baseboard (such as CY8CKIT-040 or CY8CKIT-042) senses the changes in the capacitance of the proximity sensors on the CY8CKIT-024 kit. Based on the information about capacitance changes on different sensors received from the CapSense block, the PSoC MCU determines the presence of a target object, like a hand, and correspondingly drives the LEDs on CY8CKIT-024.

You can program the PSoC device on the baseboard through the onboard KitProg hardware, which communicates to the software programming tool (PSoC Programmer) through the USB interface on the board. You can develop firmware applications for PSoC 4 devices by using PSoC Creator.

AN92239 – Proximity Sensing with CapSense provides example projects that you can use with the CY8CKIT-024 system to implement large proximity-sensing distance, liquid-tolerant proximity sensing, and gesture detection applications.

2.3 Functional Description

2.3.1 Sensor Pattern

The CY8CKIT-024 kit contains five proximity sensors: PROX, PS1, PS2, PS3, and PS4. PROX is designed in the form of a loop for a large proximity-sensing distance. PS1, PS2, PS3, and PS4 are designed as strips for vertical and horizontal gesture detection. To enable ground coupling for the proximity sensors, a GND/SHIELD loop is provided between the PROX loop and the PSx (proximity sensors PS1 through PS4) strips, as shown in Figure 2-7. Ground coupling improves the ESD immunity of the proximity sensors. Optionally, you can drive the GND/SHIELD loop with the driven shield instead of connecting it to ground to achieve liquid tolerance. For details on driven shield, grounding recommendations, and layout guidelines, refer to the Getting Started with CapSense Design Guide.

Figure 2-7: Sensor Pattern

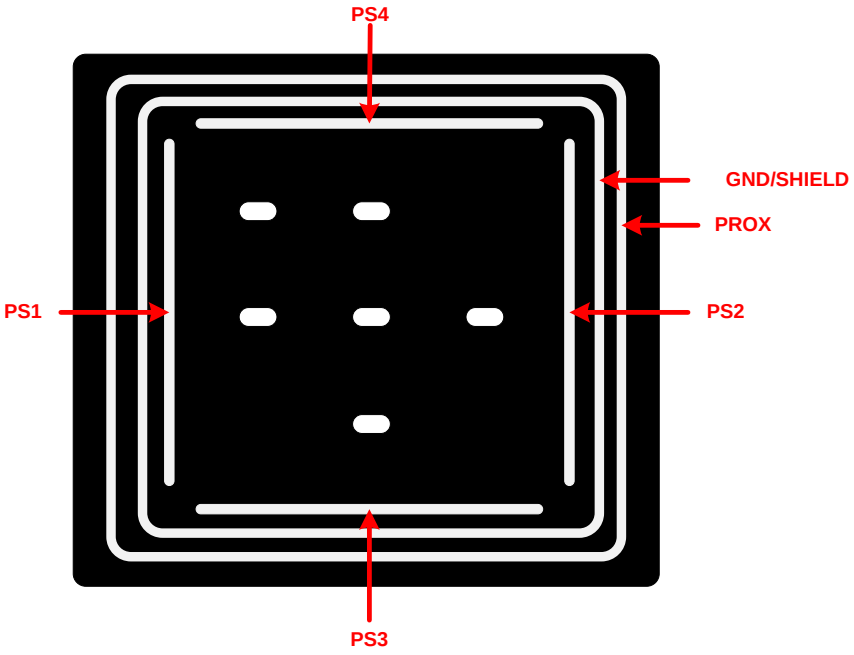

2.3.1.1 Proximity Sensors PS1 and PS2

Proximity sensors PS1 and PS2 are provided to detect horizontal gestures, such as hand movements, from left to right or right to left. Figure 2-8 shows a left-to-right hand movement.

A gesture is detected based on the sequence in which these sensors detect the presence of a hand. If PS1 detects the hand before PS2 does, the hand must be moving from left to right. Similarly, if PS2 detects the presence of a hand before PS1 does, the hand must be moving from right to left. Refer to AN92239 – Proximity Sensing with CapSense for more details on the gesture detection algorithm.

Figure 2-8: Left-to-Right Gesture



2.3.1.2 Proximity Sensors PS3 and PS4

The proximity sensors PS3 and PS4 are provided to detect vertical gestures, such as hand movements, from top to bottom or from bottom to top. Figure 2-9 shows a bottom-to-top hand movement.

A gesture is detected based on the sequence in which these sensors detect the presence of a hand. If PS4 detects the hand before PS3 does, the hand must be moving from top to bottom. Similarly, if PS3 detects the presence of a hand before PS4 does, the hand must be moving from bottom to top. Refer to AN92239 – Proximity Sensing with CapSense for more details on the gesture detection algorithm.

Figure 2-9: Bottom-to-Top Gesture



2.3.1.3 Proximity Loop

The proximity loop PROX is provided to detect the presence of a target object at a large distance. This loop, with a diagonal length of 10.3 cm, can be used to detect target objects at approximately 10 cm.

2.3.1.4 GND/SHIELD Loop

You can connect the GND/SHIELD loop to either ground or the shield by using the slide switch, SW1 (see Slide Switch SW1). The ground pattern near the proximity sensor improves the ESD immunity of the sensors by providing a low-impedance ground path for ESD. However, any ground pattern present near the sensor reduces the proximity-sensing distance. Also, there should be no ground near the sensors for liquid-tolerant designs. For liquid-tolerant or large proximity-sensing distance designs, this loop must be connected to the shield pin using Slide Switch SW1.

2.3.2 Arduino-Compatible Headers

The I/O headers J1–J4 comply with the Arduino UNO (R3) kit form factor to support similar form-factor baseboards, as the following tables (Table 2-1 through Table 2-4) show.

Table 2-1: J1 Arduino Header or Power Connector

Pin No.	Arduino Board Signal	CY8CKIT-024	CY8CKIT-040	CY8CKIT-042
J1.1	VIN	NC	VIN	VIN
J1.2	GND	GND	GND	GND
J1.3	GND	GND	GND	GND
J1.4	V5.0	NC	V5.0	V5.0
J1.5	V3.3	NC	V3.3	V3.3
J1.6	RESET	NC	RESET	RESET
J1.7	IOREF	P4.VDD	P4.VDD	P4.VDD
J1.8	NC	NC	NC	NC

Table 2-2: J2 Arduino Header

Pin No.	Arduino Board Signal	CY8CKIT-024	CY8CKIT-040	CY8CKIT-042
J2.1	A0	LED5	P0.0	P2.0
J2.2	A1	PS3	P0.1	P2.1
J2.3	A2	C_{TANK} FOR CY8CKIT-040	P0.2	P2.2
J2.4	A3	NC	P0.4	P2.3
J2.5	A4	NC	P1.3	P2.4
J2.6	A5	NC	P1.2	P2.5

Table 2-3: J3 Arduino Header

Pin No.	Arduino Board Signal	CY8CKIT-024	CY8CKIT-040	CY8CKIT-042
J3.1	D8	LED2	P1.4	P2.6
J3.2	D9	LED1	P1.5	P3.6
J3.3	D10	LED6	P1.6	P3.4
J3.4	D11	NC	P1.1	P3.0
J3.5	D12	NC	P3.1	P3.1
J3.6	D13	PS1	P1.7	P0.6
J3.7	GND	GND	GND	GND
J3.8	AREF	NC	NC	P1.7
J3.9	SDA	NC	P1.3	P4.1
J3.10	SCL	NC	P1.2	P4.0

Table 2-4: J4 Arduino Header

Pin No.	Arduino Board Signal	CY8CKIT-024	CY8CKIT-040	CY8CKIT-042
J4.1	D0	PS2	P0.5	P0.4
J4.2	D1	SHIELD	P0.6	P0.5
J4.3	D2	LED3	P0.7	P0.7
J4.4	D3	NC	P3.2	P3.7
J4.5	D4	PROX	P0.3	P0.0
J4.6	D5	NC	P3.0	P3.5
J4.7	D6	PS4	P1.0	P1.0
J4.8	D7	LED4	P2.0	P2.7

2.3.3 Hatch Pattern

A hatch pattern is provided on the bottom layer of the board, as Figure 2-10 shows. This hatch pattern may either be connected to ground or to the driven shield pin on the kit using Slide Switch SW1. Driving the hatch pattern with the shield signal provides a larger proximity-sensing distance than grounding the hatch.

Figure 2-10: Hatch Pattern on Bottom Layer of Board

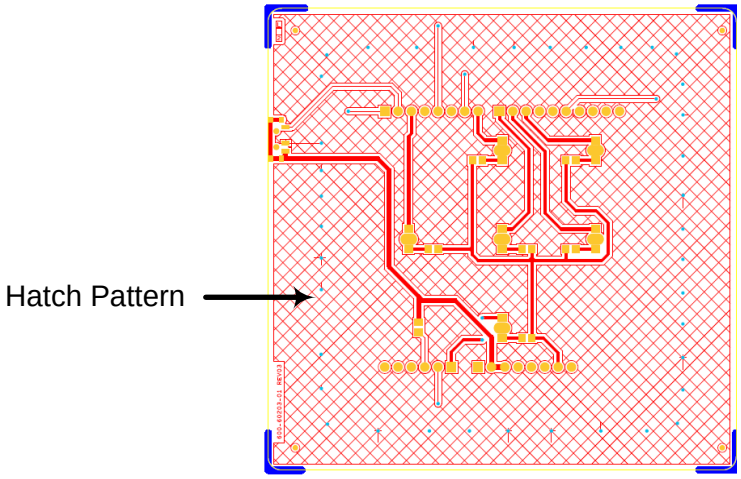

2.3.4 Slide Switch SW1

The GND/SHIELD loop on the top layer and the hatch pattern on the bottom layer are connected to a slide switch, SW1, as Figure 2-11 shows. This switch allows these patterns to be connected either to ground or the driven shield pin on the kit. Driving the hatch with the shield signal provides a larger proximity-sensing distance when compared to grounding the hatch. You can use this switch to evaluate the effect of ground and driven shield on the proximity-sensing performance.

Figure 2-11: Slide Switch

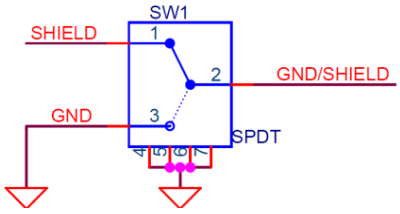

Note: The baseboard (CY8CKIT-040 or CY8CKIT-042) should be reset if the SW1 switch position on CY8CKIT-024 is modified.

2.3.5 C_{TANK} Capacitor

C_{TANK} acts as the shield tank capacitor for increasing the drive strength on the shield pin. Figure 2-12 shows the C_{TANK} connection to the J2 Arduino header.

Figure 2-12: C_{TANK} Connection to J2 Arduino Header

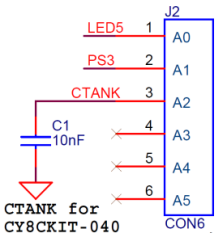

As Figure 2-12 shows, C_{TANK} is connected to pin J2.3. This Arduino header pin connects C_{TANK} to P0.2 of CY8CKIT-040. Within PSoC Creator, you should configure this pin as the “shield tank capacitor” in the **Advanced** tab of the CapSense Component Configuration window when you develop projects with the CY8CKIT-040 kit.

Also note that jumper J14 on CY8CKIT-040 should be removed (as Figure 2-13 shows) before connecting CY8CKIT-024 to CY8CKIT-040. This is because J14 connects pin P0[2], that is, the C_{TANK} pin on CY8CKIT-024, to an RGB LED on CY8CKIT-040, which must not be connected when C_{TANK} is used.

Figure 2-13: Remove J14 from CY8CKIT-040

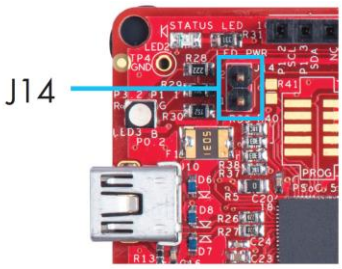

Note that for CY8CKIT-042, the onboard shield tank capacitor should be used instead of C_{TANK} on CY8CKIT-024.

Refer to the CapSense CSD Component datasheet or PSoC 4 CapSense Design Guide for more details on the use of the shield tank capacitor.

2.3.6 LEDs

The CY8CKIT-024 kit has six onboard LEDs, five of which (LED1–LED5) are arranged in a “+” layout. Figure 2-14 shows the arrangement of LEDs on the CY8CKIT-024 kit.

Figure 2-14: LEDs on CY8CKIT-024



All the LEDs are connected in an active-LOW configuration; the anodes of all the LEDs are connected to P4_VDD, which is the power pin on the J1 Arduino header. Figure 2-15 shows the connection diagram.

Figure 2-15: LEDs' Connection

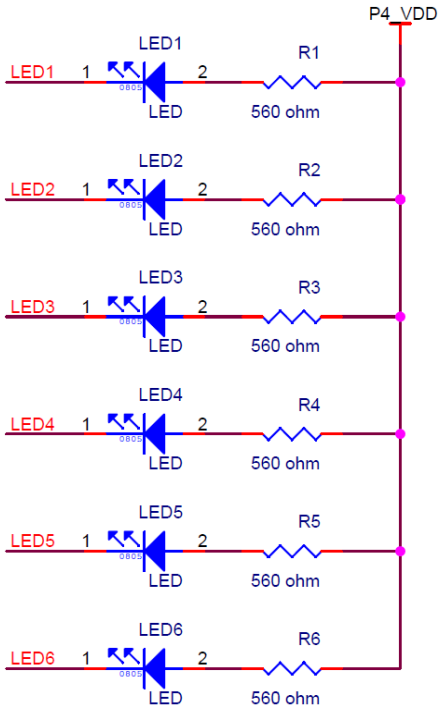

3. Example Projects

CY8CKIT-024 can be used with Cypress PSoC Pioneer Kits to evaluate the proximity-sensing capabilities of CapSense in Cypress PSoC products. AN92239 contains the example projects that demonstrate the following features of CY8CKIT-024:

- Large proximity-sensing distance (approximately 10 cm)
- Liquid-tolerant proximity sensing
- Gesture detection based on proximity sensing

.

4. Design Support

Refer to the following documents and resources to start new proximity-sensing designs with PSoC 4 CapSense technology:

- Getting Started with CapSense® Design Guide
- AN79953 – Getting Started with PSoC® 4
- PSoC 4 CapSense Design Guide
- AN92239 – Proximity Sensing with CapSense®
- PSoC 4000, PSoC 4100, or PSoC 4200 datasheet
- Online Technical Support
- Local Sales Support

Cypress recommends that you create a Technical Support Case for getting schematics and Layouts of CapSense designs reviewed with Cypress. Go to the webpage, http://www.cypress.com/techsupport, for creating a tech support case.

Appendix A: Schematics, Layout, and BOM

A.1. Schematics

Arduino Connectors

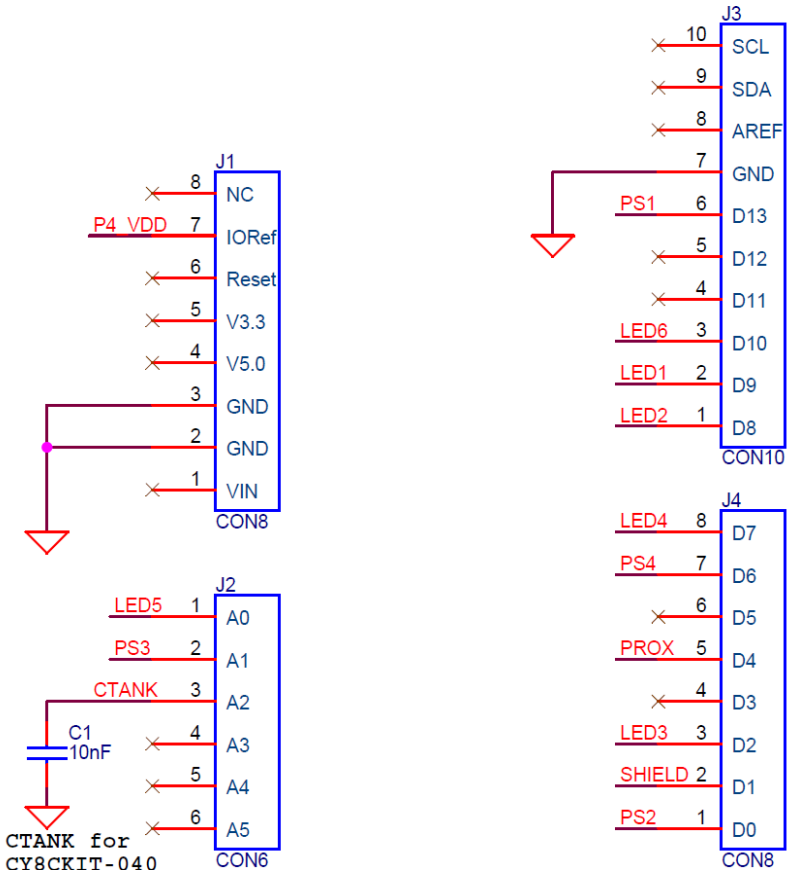

(J1- J4) Arduino Connectors

FUNCTION	CY8CKIT-040 PINS	CY8CKIT-042 PINS
PS1	P1.7	P0.6
PS2	P0.5	P0.4
PS3	P0.1	P2.1
PS4	P1.0	P1.0
PROX	P0.3	P0.0
SHIELD	P0.6	P0.5
LED1	P1.5	P3.6
LED2	P1.4	P2.6
LED3	P0.7	P0.7
LED4	P2.0	P2.7
LED5	P0.0	P2.0
LED6	P1.6	P3.4
CMOD	P0.4	P4.2
CTANK	P0.2	P4.3

LEDs

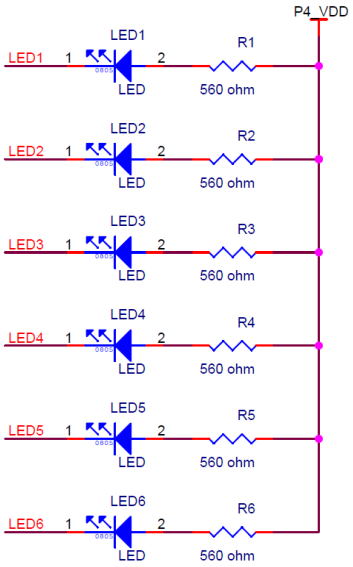

GND/Shield Switch

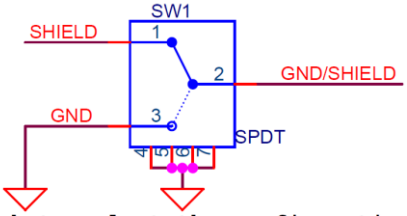

Switch to select the configuration of the loop & hatch as Ground or Shield

Switch Position	Configuration
1 & 2	Shield
2 & 3	Ground

Sensors and Shield

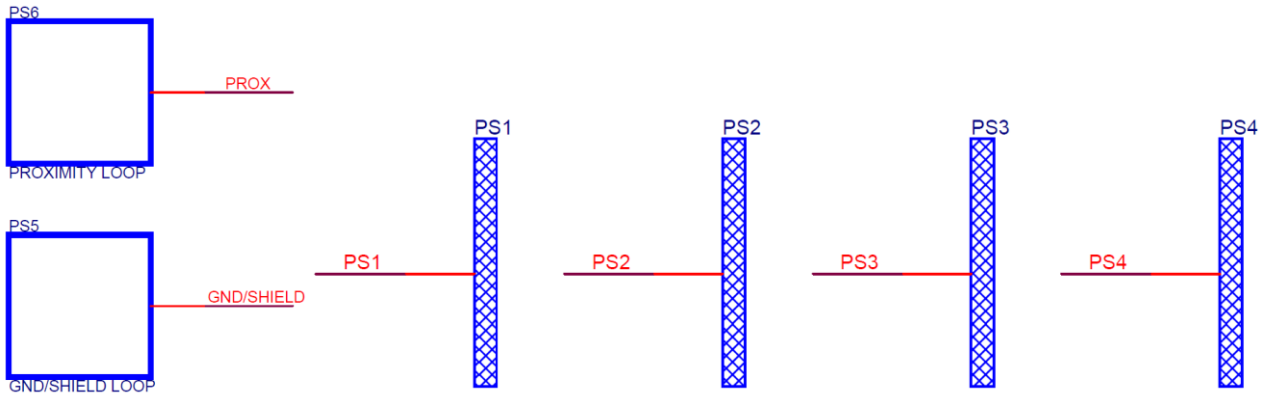

A.2. Board Layout

Top Layer

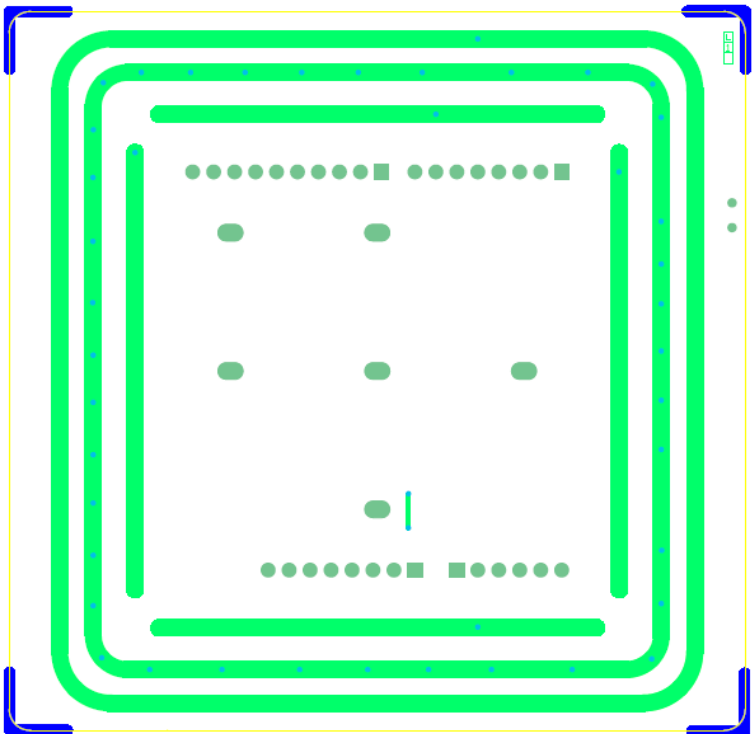

Bottom Layer

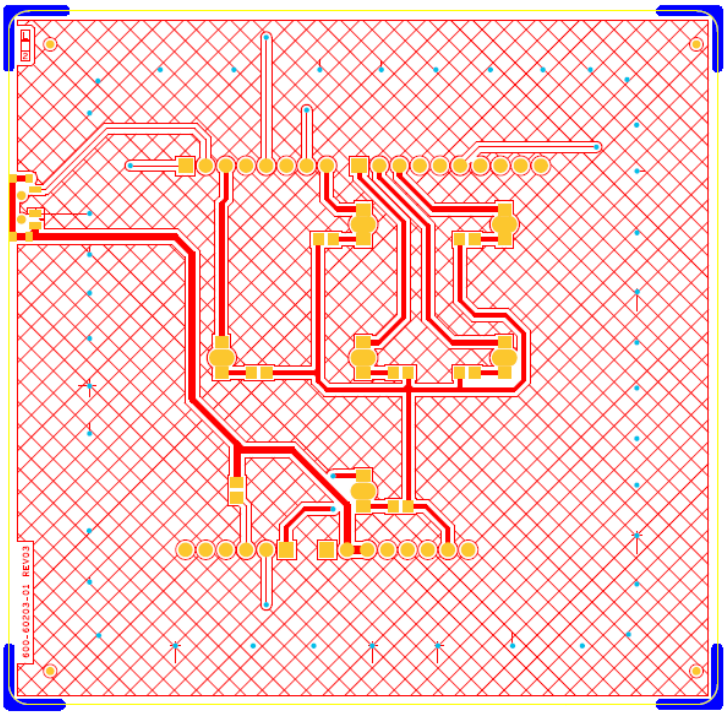

Top Silk Screen

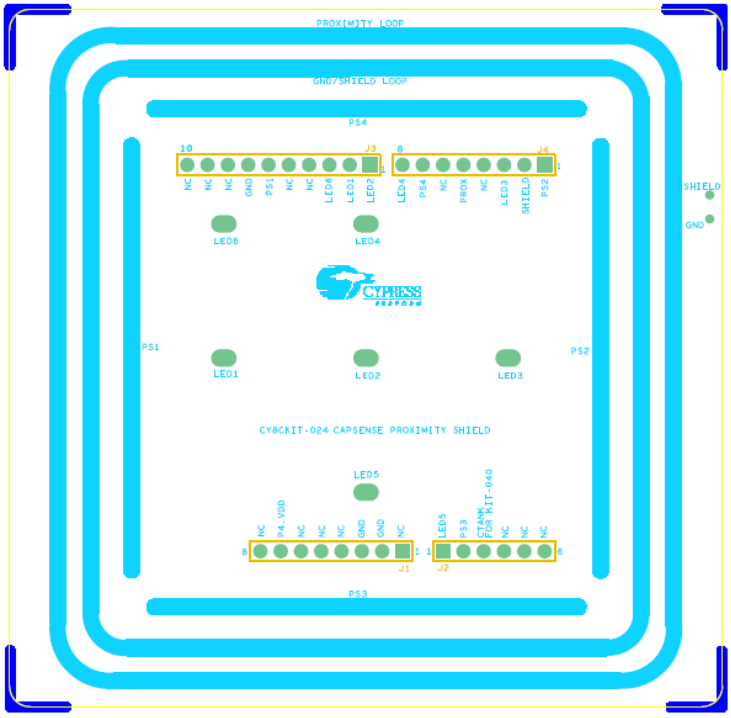

Bottom Silk Screen

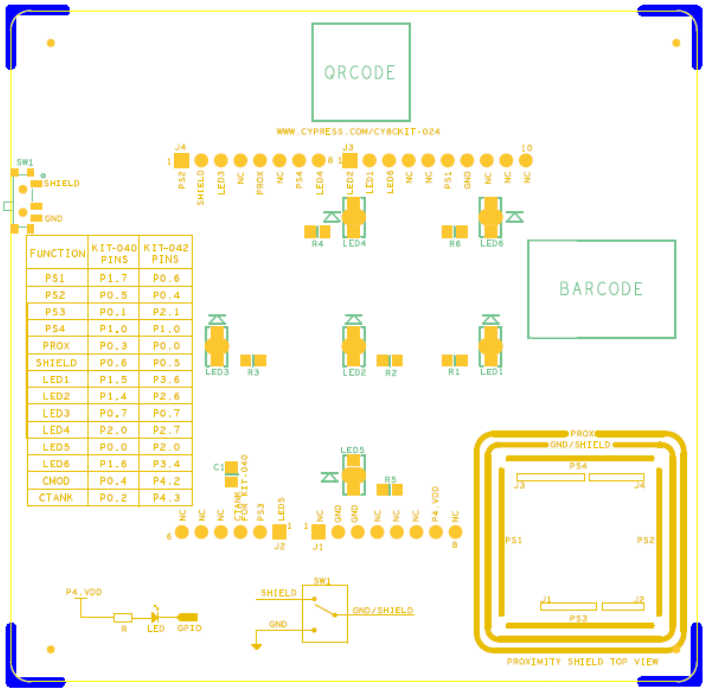

A.3. Bill of Materials

Item	Qty	Reference	Description	Manufacturer	Mfr Part Number
1	1	N/A	PCB, 89.15 mm x 87.12-mm, 2-layer, ENIG finish, high Tg, black solder mask, white silkscreen	Cypress Semiconductor	
2	2	J1, J4	CONN HEADER .100" SNGL STR 8POS	Sullins Connector Solutions	PRPC008SFAN-RC
3	1	J2	CONN HEADER .100" SNGL STR 6POS	Sullins Connector Solutions	PRPC006SFAN-RC
4	1	J3	CONN HEADER .100" SNGL STR 10POS	Sullins Connector Solutions	PRPC010SFAN-RC
5	6	LED1, LED2, LED3, LED4, LED5, LED6	LED BLUE WTR CLEAR 47NM 1206	Dialight	597-6601-607F
6	6	R1, R2, R3, R4, R5, R6	RES 560 OHM 1/8W 5% 0805 SMD	Panasonic - ECG	ERJ-6GEYJ561V
7	1	SW1	SWITCH SLIDE SPDT LOW PROF 4 V	Copal Electronics Inc	CUS-12TB
8	1	C1	CAP CER 10000PF 50 V 5% NP0 0805	Murata	GRM2195C1H103JA01D

Revision History

Document Revision History

Document Title: CY8CKIT-024 CapSense® Proximity Shield Kit Guide Doc. No. 001-92568			
Revision	**Issue Date**	**Origin of Change**	**Description of Change**
*A	07/30/2014	PRIA	New Application Note for Web
*B	05/26/2017	AESATMP9	Updated logo and copyright.