CY8CKIT-019 PSoC® Shield Adapter

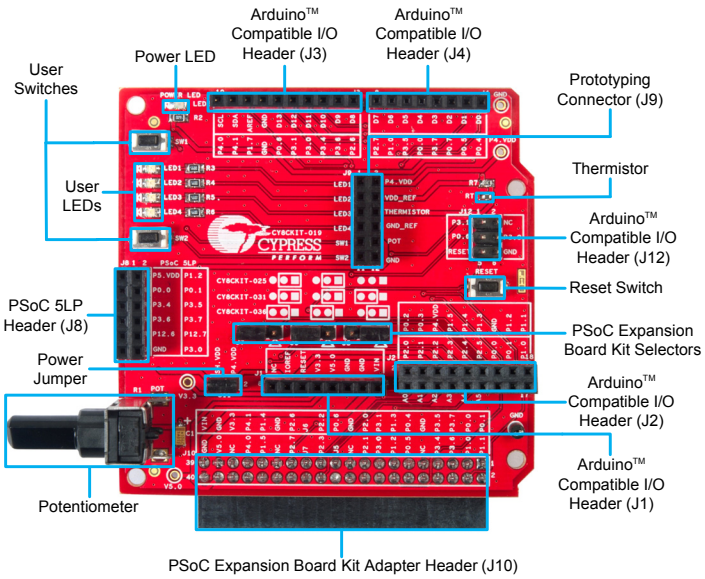

PSoC Shield Adapter Features:

- 1 Potentiometer
- 1 Thermistor
- 2 Switches
- 1 Reset Switch
- 4 LEDs
- 6 Jumper Wires

CY8CKIT-019 PSoC Shield Adapter

The CY8CKIT-019 is intended to be used with a number of Cypress development and evaluation kits.

1. Download the Blinking LED example project from web page and unzip it: www.cypress.com/go/CY8CKIT-019
2. Connect the CY8CKIT-019 PSoC Shield Adapter to the CY8CKIT-042 PSoC 4 Pioneer Board.

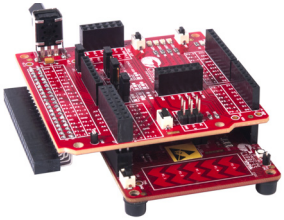

3. Connect the USB cable from the PC to the CY8CKIT-042.
4. Connect a jumper wire from the prototyping connector pin 1 (LED1) to P0.4 (on J4).
5. Launch PSoC Programmer from the Start menu.
   - Go to Start > All Programs > Cypress > PSoC programmer
   Using the 'File Load' button, navigate to the Hex File downloaded from the web page and select the 'Blinking LED.hex' file.
6. Click the 'Program' button on PSoC Programmer. After successful programming, LED1 blinks.

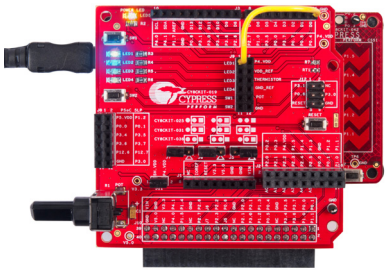

For more information about CY8CKIT-019 PSoC Shield Adapter including using it with Cypress expansion board kits, go to www.cypress.com/go/CY8CKIT-019

For technical support, visit http://www.cypress.com/support

© Cypress Semiconductor Corporation, 2013. All rights reserved. PSoC® is a registered trademark and PSoC Creator™ is a trademark of Cypress Semiconductor Corp. All other trademarks or registered trademarks referenced herein are the property of their respective owners. The information contained here is subject to change without notice.

Doc. #: 001-89826 Rev. **