# Out of Box Demo: PSoC Rocks!

1

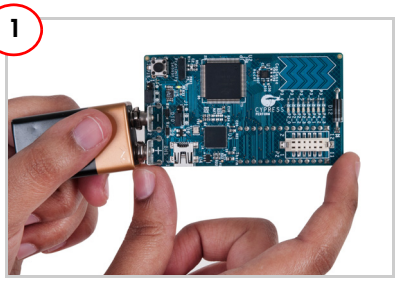

Connect the 9-V battery to the board.

2




Wave the kit and view the message, as shown.

3



Insert the kit CD and run the CD's autorun utility.

4




Open the guide and install software.

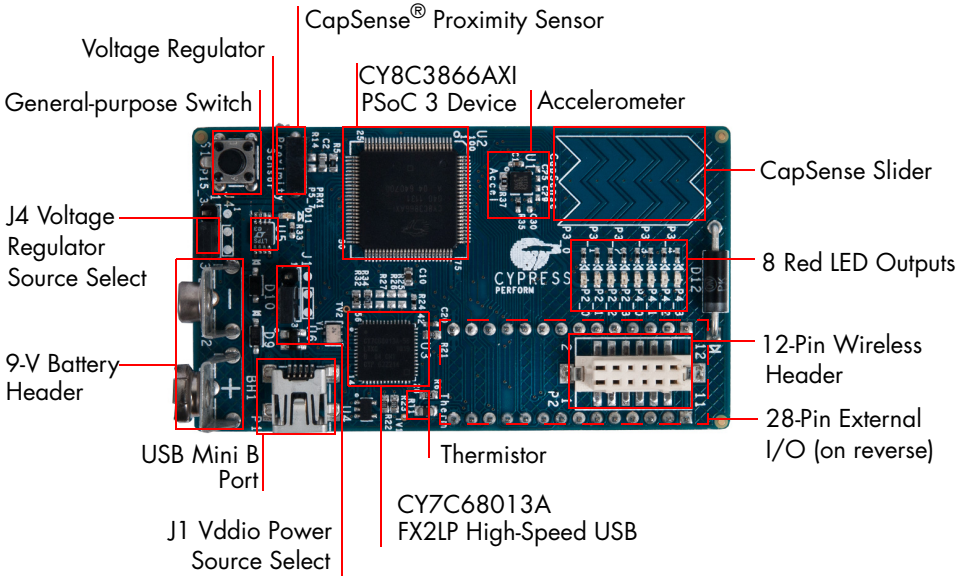


## Kit Revision

To know if you are using the latest kit, look for the kit revision in the white sticker at the bottom left on the back of the kit box. If the revision reads CY8CKIT-003B REV. **, then you own the latest version. You can also check the silicon marketing part number on the board; the part number should be CY8C3866AXI-040. This kit is equipped with production PSoC 3 silicon.

For the latest information about this kit, visit
**http://www.cypress.com/go/CY8CKIT-003**

© 2009-2012 Cypress Semiconductor Corporation. All rights reserved. All trademarks or registered trademarks referenced herein are the properties of their respective owners.