CY4701

EZ-USB® GX3™ Reference Design Guide

Doc. No. 001-97892 Rev. *A

Cypress Semiconductor
198 Champion Court
San Jose, CA 95134-1709
www.cypress.com

© Cypress Semiconductor Corporation, 2015-2017. This document is the property of Cypress Semiconductor Corporation and its subsidiaries, including Spansion LLC (“Cypress”). This document, including any software or firmware included or referenced in this document (“Software”), is owned by Cypress under the intellectual property laws and treaties of the United States and other countries worldwide. Cypress reserves all rights under such laws and treaties and does not, except as specifically stated in this paragraph, grant any license under its patents, copyrights, trademarks, or other intellectual property rights. If the Software is not accompanied by a license agreement and you do not otherwise have a written agreement with Cypress governing the use of the Software, then Cypress hereby grants you a personal, non-exclusive, nontransferable license (without the right to sublicense) (1) under its copyright rights in the Software (a) for Software provided in source code form, to modify and reproduce the Software solely for use with Cypress hardware products, only internally within your organization, and (b) to distribute the Software in binary code form externally to end users (either directly or indirectly through resellers and distributors), solely for use on Cypress hardware product units, and (2) under those claims of Cypress’s patents that are infringed by the Software (as provided by Cypress, unmodified) to make, use, distribute, and import the Software solely for use with Cypress hardware products. Any other use, reproduction, modification, translation, or compilation of the Software is prohibited.

TO THE EXTENT PERMITTED BY APPLICABLE LAW, CYPRESS MAKES NO WARRANTY OF ANY KIND, EXPRESS OR IMPLIED, WITH REGARD TO THIS DOCUMENT OR ANY SOFTWARE OR ACCOMPANYING HARDWARE, INCLUDING, BUT NOT LIMITED TO, THE IMPLIED WARRANTIES OF MERCHANTABILITY AND FITNESS FOR A PARTICULAR PURPOSE. To the extent permitted by applicable law, Cypress reserves the right to make changes to this document without further notice. Cypress does not assume any liability arising out of the application or use of any product or circuit described in this document. Any information provided in this document, including any sample design information or programming code, is provided only for reference purposes. It is the responsibility of the user of this document to properly design, program, and test the functionality and safety of any application made of this information and any resulting product. Cypress products are not designed, intended, or authorized for use as critical components in systems designed or intended for the operation of weapons, weapons systems, nuclear installations, life-support devices or systems, other medical devices or systems (including resuscitation equipment and surgical implants), pollution control or hazardous substances management, or other uses where the failure of the device or system could cause personal injury, death, or property damage (“Unintended Uses”). A critical component is any component of a device or system whose failure to perform can be reasonably expected to cause the failure of the device or system, or to affect its safety or effectiveness. Cypress is not liable, in whole or in part, and you shall and hereby do release Cypress from any claim, damage, or other liability arising from or related to all Unintended Uses of Cypress products. You shall indemnify and hold Cypress harmless from and against all claims, costs, damages, and other liabilities, including claims for personal injury or death, arising from or related to any Unintended Uses of Cypress products.

Cypress, the Cypress logo, Spansion, the Spansion logo, and combinations thereof, WICED, PSoC, CapSense, EZ-USB, F-RAM, and Traveo are trademarks or registered trademarks of Cypress in the United States and other countries. For a more complete list of Cypress trademarks, visit cypress.com. Other names and brands may be claimed as property of their respective owners.

Contents

Contents **3**

Safety Information **4**

Regulatory Compliance 4
General Safety Instructions 4
ESD Protection 4
Handling Boards 4

1. Introduction **5**

1.1 Kit Contents 5
1.2 CY4701 RDK Dongle 5
1.3 Additional Resources 6
1.4 Technical Support 6
1.5 Document Conventions 6
1.6 Abbreviations 6

2. Software Installation **7**

2.1 Software Tools and Drivers 7
2.2 Install Hardware 7

3. Kit Operation **8**

3.1 USB-to-Ethernet Bridge Controller Enumeration 8
3.2 Testing CY4701 RDK Functionality 9
3.3 EZ-USB GX3 Parameter Configuration in Windows 12
3.3.1 Connecting CY4701 RDK to Cypress GX3 EEPROM Programming Tool 12
3.3.2 Parameter Configuration 14

4. Hardware **16**

4.1 Board Details 16
4.2 Theory of Operation 17
4.3 Functional Description 17
4.3.1 GX3 Features 17
4.3.2 Power Supply System 17
4.3.3 USB Connector 18
4.3.4 Serial EEPROM 19
4.3.5 LEDs 19

5. Appendix A: Instructions and BOM **20**

A.1 Installing and Binding the Driver Manually 20
A.2 Bill of Materials (BOM) 21

Revision History **23**

Safety Information

Regulatory Compliance

The CY4701 EZ-USB® GX3™ Reference Design Kit (RDK) is intended for use as a development platform for hardware or software in a laboratory environment. The board is an open system design, which does not include a shielded enclosure. This kit may cause interference with other electrical or electronic devices in close proximity. In a domestic environment, this product may cause radio interference. In such cases, take adequate preventive measures. Also, do not use this board near any medical equipment or RF devices.

Attaching additional wiring to this product or modifying the product operation from the factory default may affect its performance and cause interference with other apparatus in the immediate vicinity. If such interference is detected, suitable mitigating measures must be taken.



The CY4701 RDK contains electrostatic discharge (ESD) sensitive devices. Electrostatic charges readily accumulate on the human body and any equipment and can discharge without detection. Permanent damage may occur to devices subjected to high-energy discharges. Cypress recommends proper ESD precautions to avoid performance degradation or loss of functionality. Store unused CY4701 reference design boards in the protective shipping package.



End-of-Life/Product Recycling
The end-of-life cycle for this kit is five years from the date of manufacture mentioned on the back of the box. Contact the nearest recycler to discard the kit.

General Safety Instructions

ESD Protection

ESD can damage boards and associated components. Cypress recommends that you perform procedures only at an ESD workstation. If an ESD workstation is not available, use the appropriate ESD protection by wearing an antistatic wrist strap attached to the chassis ground (any unpainted metal surface) on the board when handling parts.

Handling Boards

CY4701 boards are sensitive to ESD. Hold the board only by its edges. After removing the board from its box, place it on a grounded, static-free surface. Use a conductive foam pad if available. Do not slide the board over any surface.

1. Introduction

Thank you for your interest in the CY4701 EZ-USB® GX3™ Reference Design Kit (RDK). This RDK is an easy-to use kit that showcases the unique features of CYUSB3610 (GX3), Cypress's SuperSpeed USB to Gigabit Ethernet Bridge Controller (GX3).

Cypress EZ-USB® GX3™ is a USB 3.0 to Gigabit Ethernet Bridge Controller designed to provide seamless Ethernet connectivity to the host computers through a USB interface. The GX3 enumerates as a standard network adapter on the PC, enabling existing software applications to be reused, and accelerates time to market.

The CY4701 GX3 Reference Design Kit enables the customers to evaluate the GX3 device. This user guide describes the steps to install the drivers required by the RDK and to operate the RDK dongle provided with the kit. The guide also documents the two software utilities and explains the use of each. This document also explains the steps in detail on how to measure the Gigabit Ethernet throughput using the RDK dongle provided with this kit.

1.1 Kit Contents

The CY4701 GX3 Reference Design Kit contains the following:

- GX3 reference design dongle
- Quick start guide

Visit the kit web page (www.cypress.com/go/CY4701) for more information. Inspect the contents of the kit. If any parts are missing contact your nearest Cypress Sales office for further assistance.

1.2 CY4701 RDK Dongle

CY4701 RDK is a plug-and-play dongle requiring no other hardware for its operation except an RJ45 cable to connect to the network.

Figure 1-1. GX3 RDK Dongle

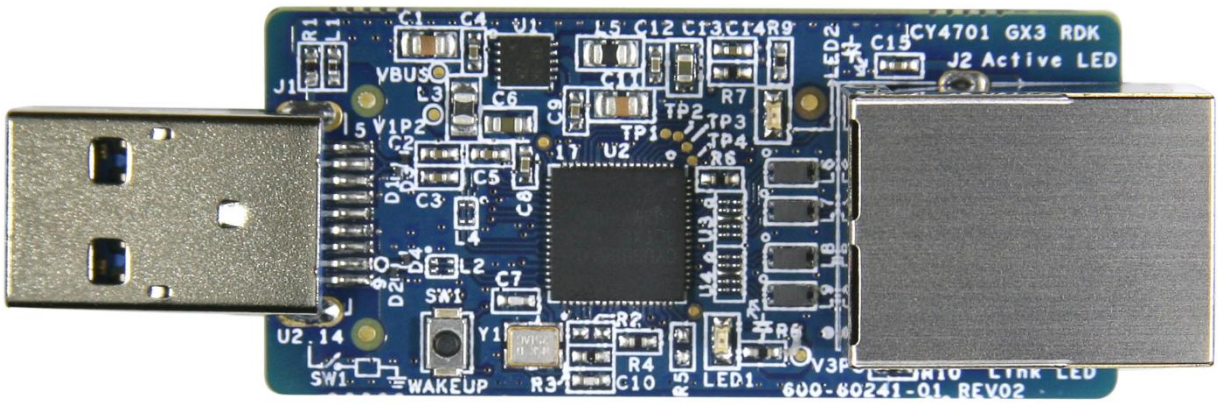

1.3 Additional Resources

Visit the EZ-USB GX3 web page for additional learning resources such as datasheets, application notes and knowledge base articles.

1.4 Technical Support

For assistance, go to our support web page or contact customer support at +1 (800) 541-4736 Ext. 8 (in the USA), or +1 (408) 943-2600 Ext. 8 (International).

1.5 Document Conventions

Convention	Usage
`Courier New`	Displays file locations, user-entered text, and source code: `C:\ ...cd\gx3\`
Italics	Displays file names and reference documentation: For example, *CY4701.cyusb*
[Bracketed, Bold]	Displays keyboard commands in procedures: **[Enter]** or **[Ctrl] [C]**
File > **Open**	Represents menu paths: **File** > **Open** > **New Project**
Bold	Displays commands, menu paths, and icon names in procedures: Click the **File** icon and then click **Open.**
Times New Roman	Displays an equation: 2 + 2 = 4
Text in gray boxes	Describes cautions or unique functionality of the product

1.6 Abbreviations

The following table lists the abbreviations used in this kit guide.

Abbreviation	Definition
EEE	Energy Efficient Ethernet
Gbps	Gigabits per second
Mbps	Megabits per second
PID	Product ID
RDK	Reference Design Kit
USB	Universal Serial Bus
VID	Vendor ID

2. Software Installation

2.1 Software Tools and Drivers

The following software tools and drivers are available for GX3 based solution development:

- Drivers for Windows XP; Windows Vista; Windows 7, 8, 8.1 and 10 (32-bit and 64-bit systems)
- Drivers for Mac OS
- Drivers for Linux
- Drivers for Chrome OS
- GX3 EEPROM Programming Tool
- GX3 Production Test Tool

These software tools and drivers are available at www.cypress.com/gx3software.

2.2 Install Hardware

This kit does not require any additional hardware installation.

3. Kit Operation

The CY4701 RDK helps you evaluate the EZ-USB GX3 SuperSpeed USB to Gigabit Ethernet Bridge Controller. The CY4701 RDK dongle is designed to work in USB bus-powered mode. Figure 3-1 shows the dongle image with references to the onboard components. The RDK is also available with a Type-C USB plug as shown.

Figure 3-1. CY4701 RDK

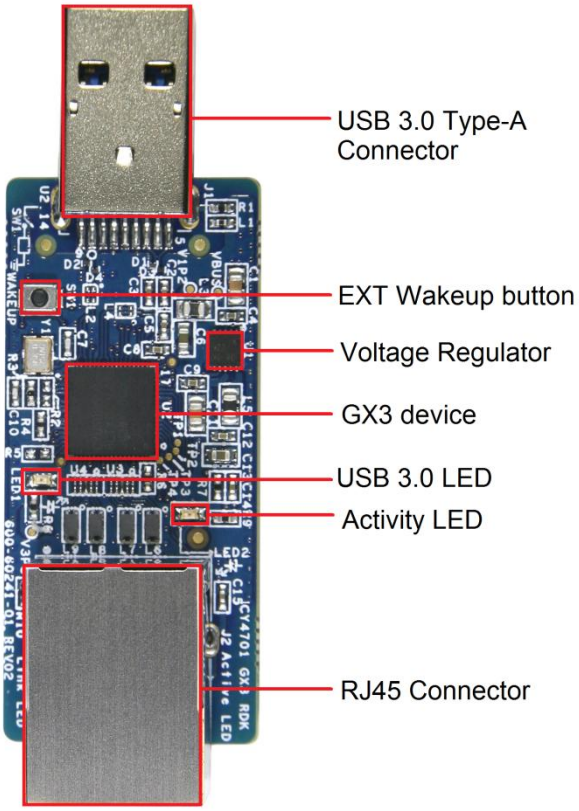

3.1 USB-to-Ethernet Bridge Controller Enumeration

Connect the CY4701 RDK dongle to the USB port of the PC. The board enumerates as a network adapter in the **Device Manager**.

Follow these steps for device enumeration:

1. Connect the CY4701 RDK dongle to the USB port of the PC.
2. Notice that the PC detects the board and the software driver is automatically downloaded from the Microsoft website and bound to the USB device.

   Note: If the driver installation is unsuccessful, download the driver per your operating system from www.cypress.com/gx3software. The driver folder structure is shown in Figure 3-2.

For more information, refer to A.1 Installing and Binding the Driver Manually.

Figure 3-2. Folder for cyusb3610 Driver

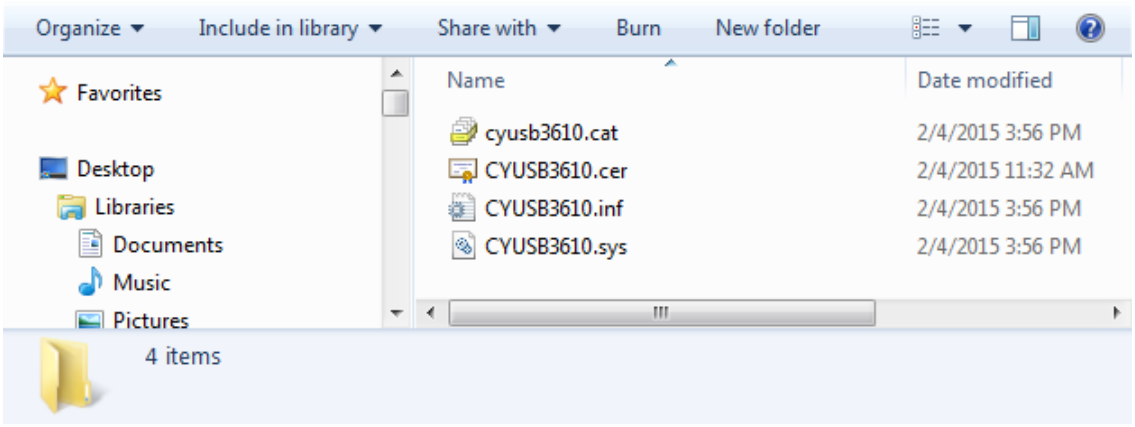

Note: If a "Welcome to the Found New Hardware Wizard" message appears, select the **Yes, this time only** option and click **Next** to continue the installation.

3. When the software drivers are successfully bound, the board enumeration is complete. The board appears as a network adapter in the Windows **Device Manager**. To launch the **Device Manager** in Windows 7, go to **Start** > **Control Panel** > **Device Manager**, as shown in Figure 3-3.

Figure 3-3. CY4701 RDK Enumeration as a Network Adapter in Device Manager



3.2 Testing CY4701 RDK Functionality

You can perform the EZ-USB GX3 functionality and performance tests using a software PC tool, *iperf.exe.* Iperf is an open source tool to measure maximum TCP bandwidth, allowing you to tune various parameters and UDP characteristics. Iperf can be downloaded from https://iperf.fr.

Follow these steps to test the dongle's functionality using the Iperf test tool:

1. Connect the CY4701 RDK dongle to the USB port of the PC. This PC will act as a client PC.
2. Connect an Ethernet cable to the RJ45 connector of the CY4701 RDK to the Ethernet port of the other PC. This PC will act as server PC.
3. On the server PC, go to **Computer** > **Network** > **Network and Sharing Center**.

4. Click on the desired local area connection, as shown in Figure 3-4.

Figure 3-4. Network and Sharing Center

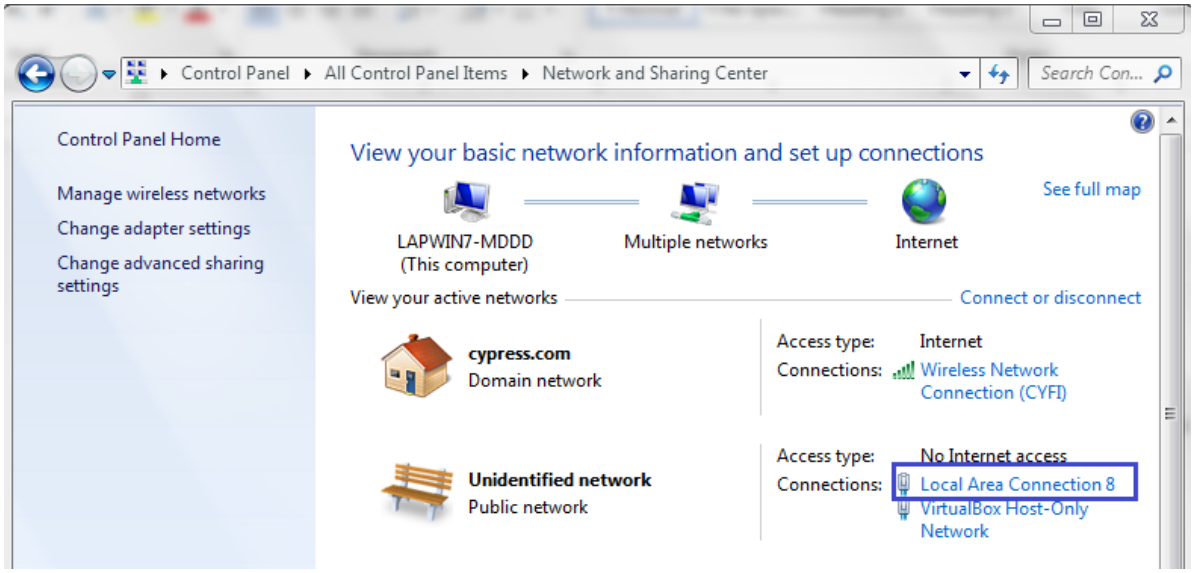

5. After the dialog box appears, click on **Properties** and double-click on **Internet Protocol Version 4**, as shown in Figure 3-5.

Figure 3-5. Local Area Connection Properties

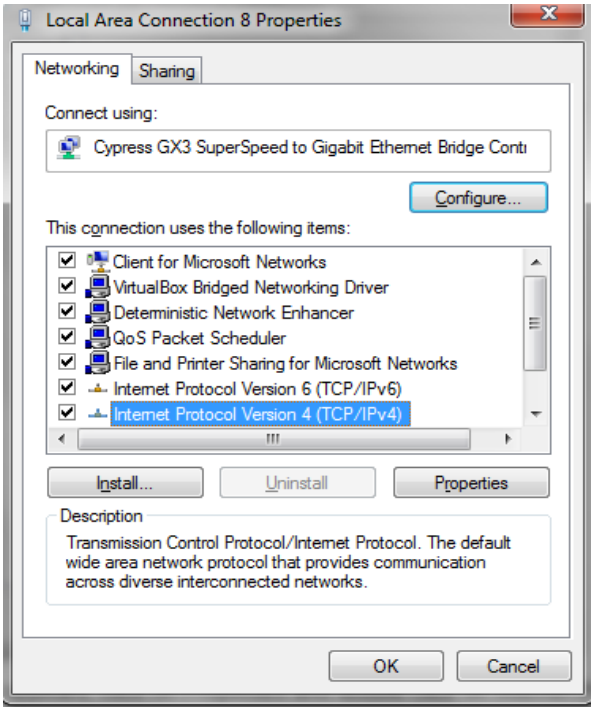

6. Set the IP address as shown in Figure 3-6 and click OK.

Figure 3-6. Setting the IP Address Manually

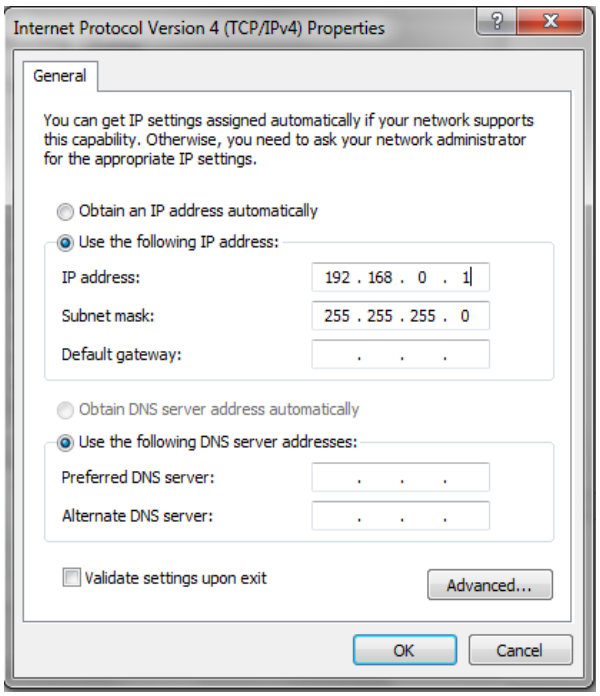

7. Repeat steps 4 to 6 on the client PC to configure the IP address. Note that the IP address for the client PC should be different from that of the server PC, but the domain and subnet mask need to be the same. For example, if the IP address of the server PC is set as 192.168.0.1, then the IP address of the client PC should be 192.168.0.*xxx*, where *xxx* can be any number between 2 and 254.
8. Open the command prompt on the server PC and browse to the path where *iperf.exe* is stored.
9. Run the command **iperf.exe –s,** as shown in Figure 3-7.

Figure 3-7. Running Iperf on Server PC

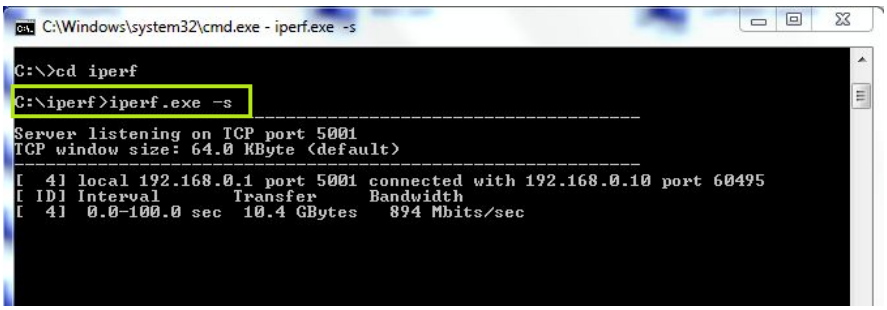

10. Repeat step 8 on the client PC and run **iperf.exe –c <server IP address> –i 5 –t 100 –l 10m**, as shown in Figure 3-8.

Figure 3-8. Running Iperf on Client PC

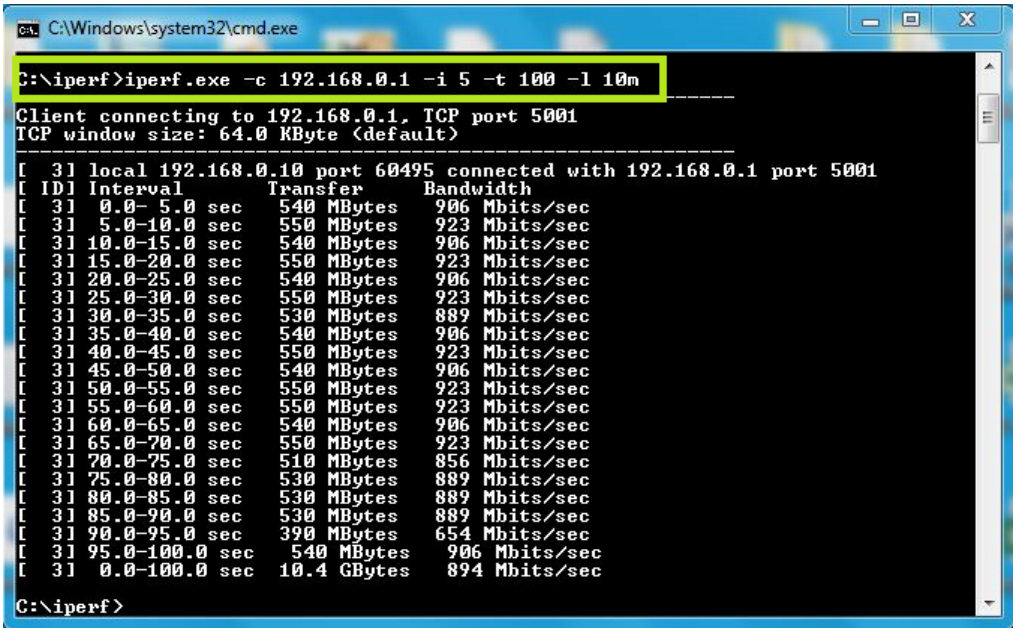

The throughput will be displayed on the client PC every 5 seconds, as shown in Figure 3-8. The test will run for 100 seconds and then display the average Ethernet bandwidth.

3.3 EZ-USB GX3 Parameter Configuration in Windows

The EZ-USB GX3 on the CY4701 RDK can be configured for parameters such as USB VID, PID, MAC address, strings, and others into the external EEPROM by using the Cypress GX3 EEPROM Programming Tool. The GX3 comes with preconfigured parameters in its internal memory. However, you have the option to choose your own parameters and store them in the external EEPROM.

To configure the parameters, you need to bind the GX3 test driver to the CY4701 RDK before using the GX3 EEPROM Programming Tool. The following sections provide detailed descriptions to bind the test driver manually and configure the parameters by using the Programming Tool.

3.3.1 Connecting CY4701 RDK to Cypress GX3 EEPROM Programming Tool

Follow these steps to connect the device using the Cypress GX3 EEPROM Programming Tool:

1. Open **Device Manager** and right-click on **Cypress GX3 SuperSpeed to Gigabit Ethernet Bridge Controller.**

2. Click on **Update Driver Software** and select **Browse my computer for driver software,** as shown in Figure 3-9.

Figure 3-9. Update Driver Software

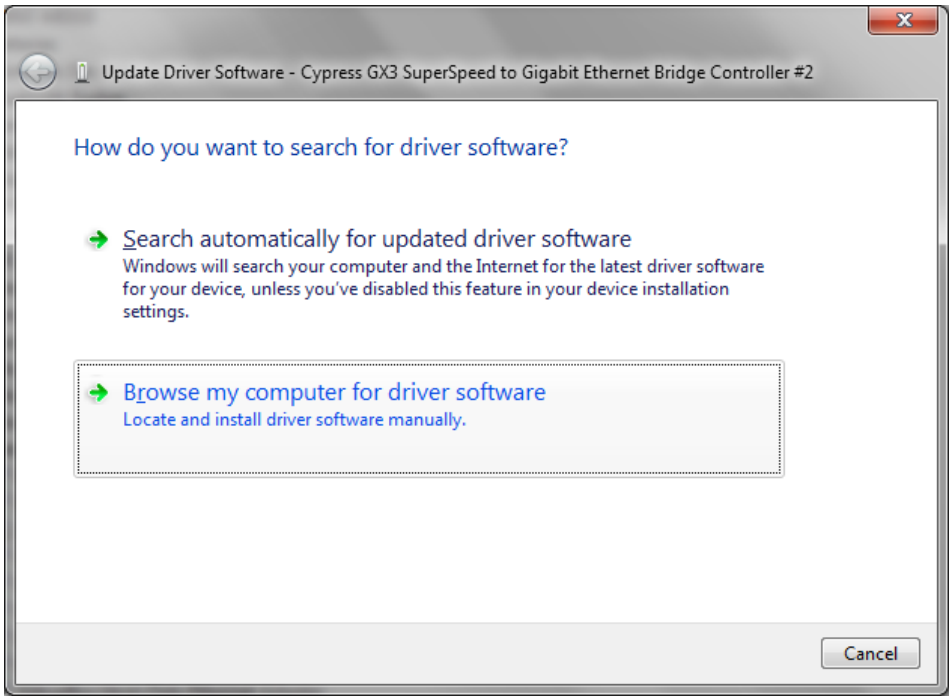

3. Select **Let me pick from a list of device drivers on my computer,** as shown in Figure 3-10.

Figure 3-10. Manually Select the Driver

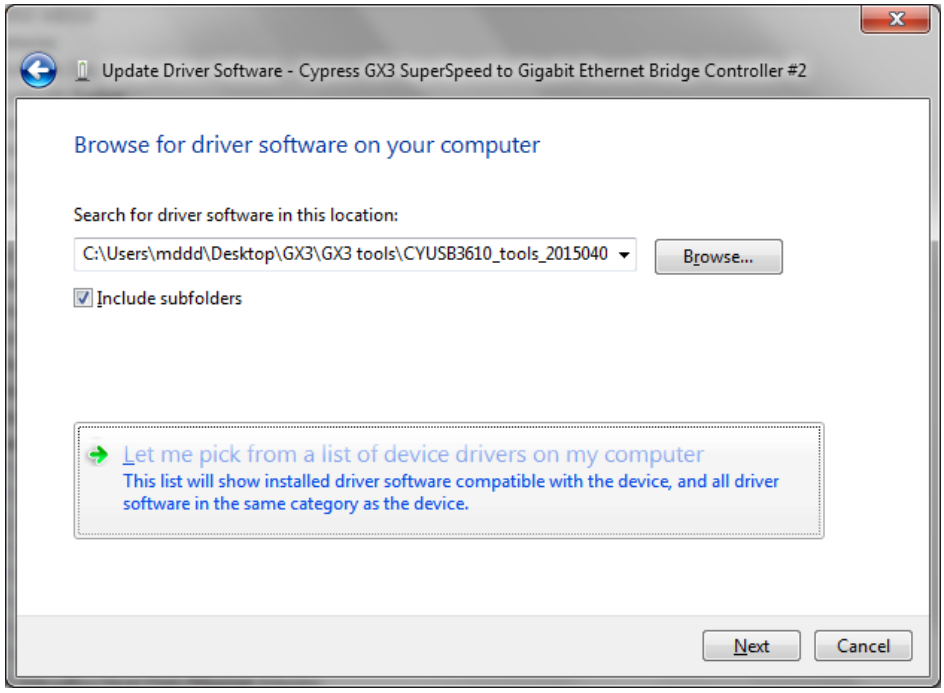

4. Click on **Have Disk** and browse to the location `<Install Directory>\GX3 EEPROM Programming Tool\<driver folder>`. Then select a suitable driver based on your OS.

5. Click **Next** and wait until the driver is successfully installed. The previous steps will bind the CYUSB3610 test driver to the GX3 device. The device will appear as **Cypress GX3 SuperSpeed to Gigabit Ethernet Bridge Controller (Test Driver)** in **Device Manager**.
6. Run the GX3 EEPROM Programming Tool from **Start** > **All Programs** > **Cypress** > **CY4701 RDK** > **GX3 EEPROM Programming Tool.**

   For a detailed description of the Programming Tool, refer to the *GX3 EEPROM Programming User Guide* at www.cypress.com/gx3.

   Figure 3-11 shows the startup screen of the Cypress GX3 EEPROM Programming Tool.

Figure 3-11. EEPROM Programming Tool Startup Screen

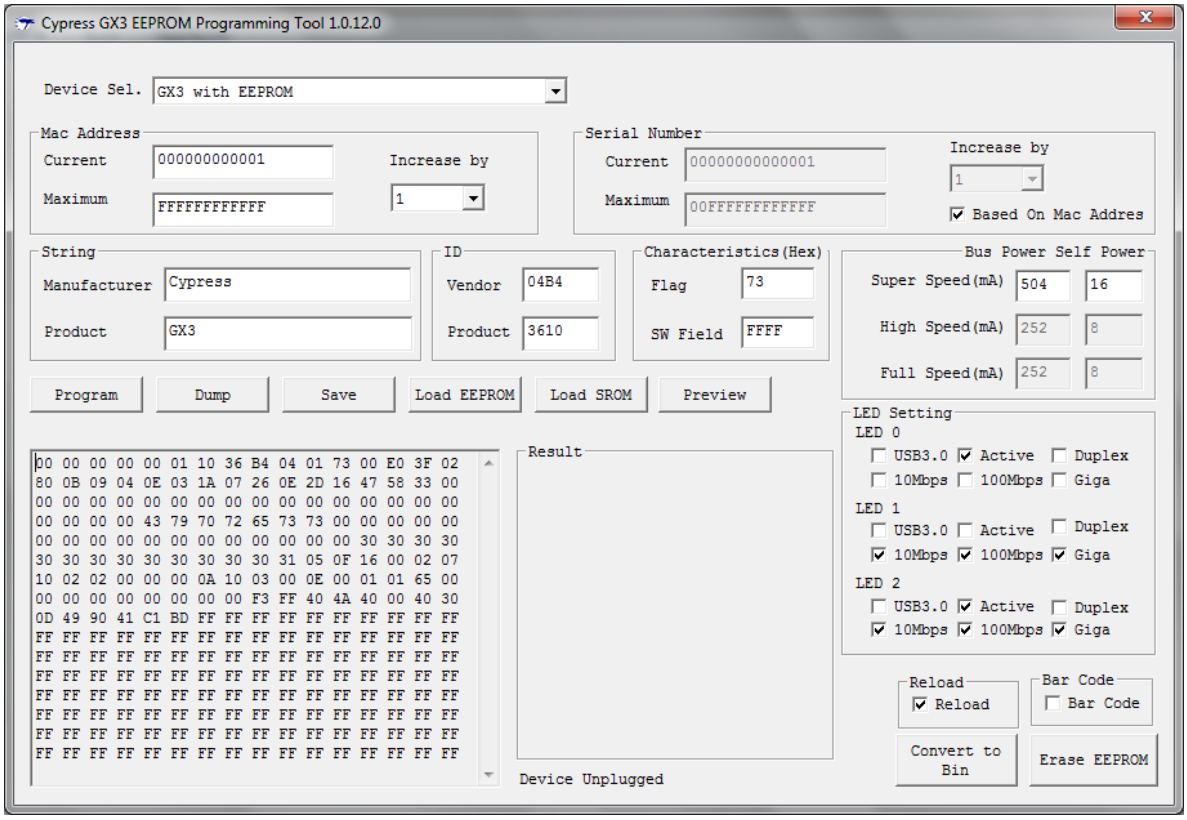

3.3.2 Parameter Configuration

You can configure the following parameters using the Cypress GX3 EEPROM Programming Tool:

- Power supply system
- Ethernet MAC Address
- USB VID
- USB PID
- USB Manufacturer string
- USB Product string
- USB Serial Number
- LED settings

To change the parameters, follow these steps:

1. Enter the parameter values and click the **Preview** button.

   The data window will display the hex values that are ready to be programmed in an EEPROM.

2. Click the **Program** button to program the contents in the EEPROM.

   If the programming is successful, a green ring will appear in the result window, as shown in Figure 3-12.

Figure 3-12. EEPROM Programming Tool showing programming successful

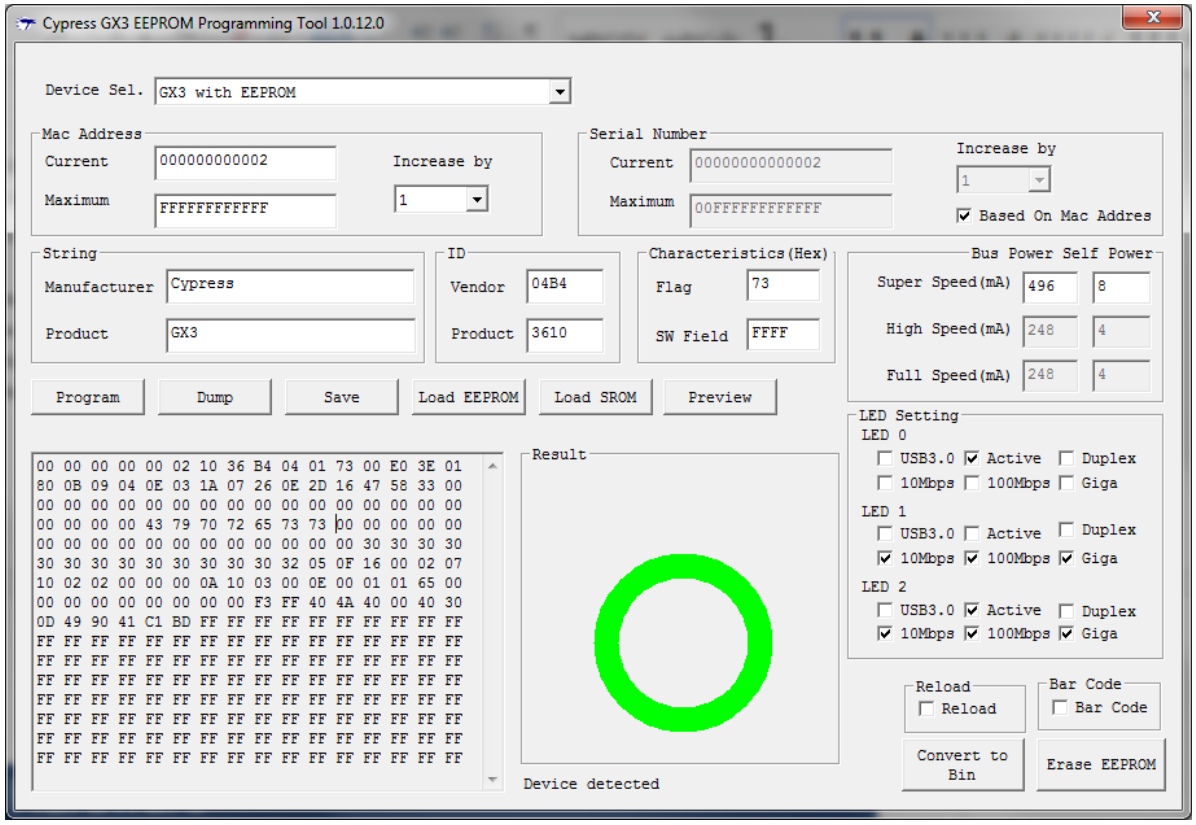

4. Hardware

4.1 Board Details

The CY4701 RDK dongle (Figure 4-1) consists of the following components:

- CYUSB3610 GX3 SuperSpeed USB to Gigabit Ethernet Bridge Controller
- Power supply system
- USB Type-A connector
- RJ45 connector
- Serial EEPROM
- LEDs

Figure 4-1. CY4701 RDK Dongle

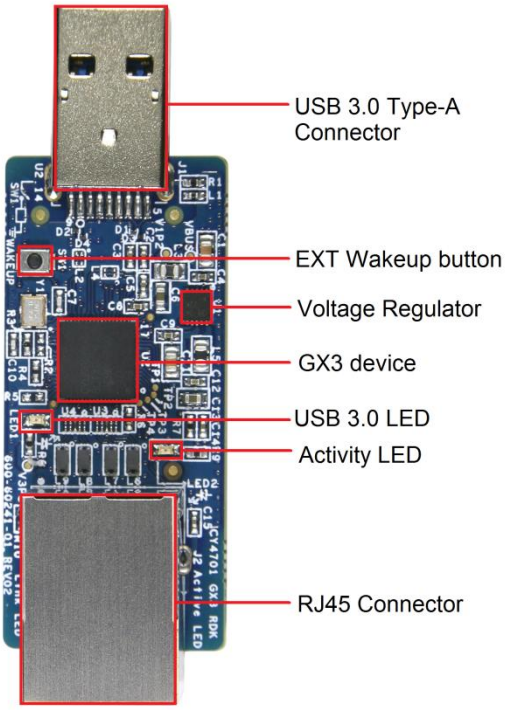

4.2 Theory of Operation

This section describes the CY4701 RDK board block diagram shown in Figure 4-2.

Figure 4-2. Hardware Block Diagram

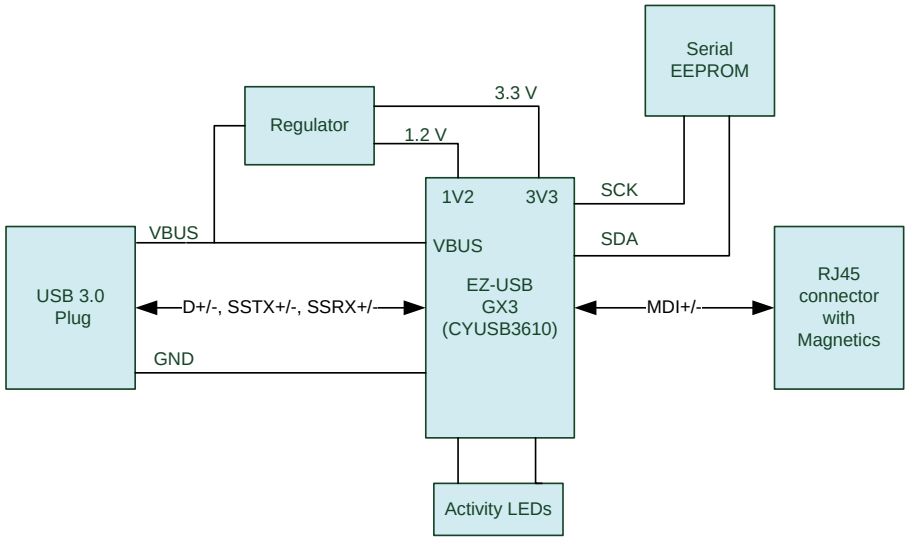

The CY4701 RDK dongle features the CYUSB3610 GX3 SuperSpeed USB to Gigabit Ethernet Bridge Controller, which does not require any firmware development. You can modify the USB and Ethernet parameters of the controller using the Cypress GX3 EEPROM Programming Tool.

The CY4701 RDK dongle is powered from the USB. This input voltage is regulated with an LDO regulator to 3.3 V and 1.8 V connected to the GX3 bridge controller. You can connect to a network using an Ethernet cable to the RJ45 connector of the CY4701 RDK.

The CY4701 RDK includes a serial EEPROM connected to the GX3 bridge controller. The configurable parameter values are stored in EEPROM so that while booting, the GX3 loads the parameter values from the EEPROM. If the EEPROM is blank or has invalid data, the GX3 loads the default parameters stored in its internal memory.

The CY4701 RDK also includes a USB 3.0 activity LED and an Ethernet activity LED. Refer to the LEDs section for an explanation of their functions.

4.3 Functional Description

The GX3 RDK enumerates as a standard network adapter on the PC, enabling existing software applications to be reused, and accelerates time to market. For more information, refer to the GX3 web page and the GX3 datasheet.

4.3.1 GX3 Features

- USB 3.0 certified, SuperSpeed (5 Gbps); also supports USB High Speed and Full Speed
- Gigabit Ethernet PHY
  - Supports Energy Efficient Ethernet (EEE)
  - Supports WLAN (Wake on LAN)
  - Supports throughput up to 950 Mbps
  - Supports Jumbo frames up to 4K for more throughput

4.3.2 Power Supply System

The CY4701 RDK dongle is designed to operate in the USB bus-powered mode. The onboard voltage regulator provides the 3.3 V and 1.2 V required for the bridge controller and the serial EEPROM.

4.3.3 USB Connector

A USB standard-A connector is used on the board, as shown in Figure 4-3. The connector's shield is connected to the ground. Six ESD diodes (D1–D5 and D7) are placed on the USB signal pins to reduce ESD noise. D6, inductor (L16), and capacitors (C50, C48) are placed on the VBUS pin to reduce the noise from power supply lines.

Figure 4-3. USB Type-A Connector Schematic

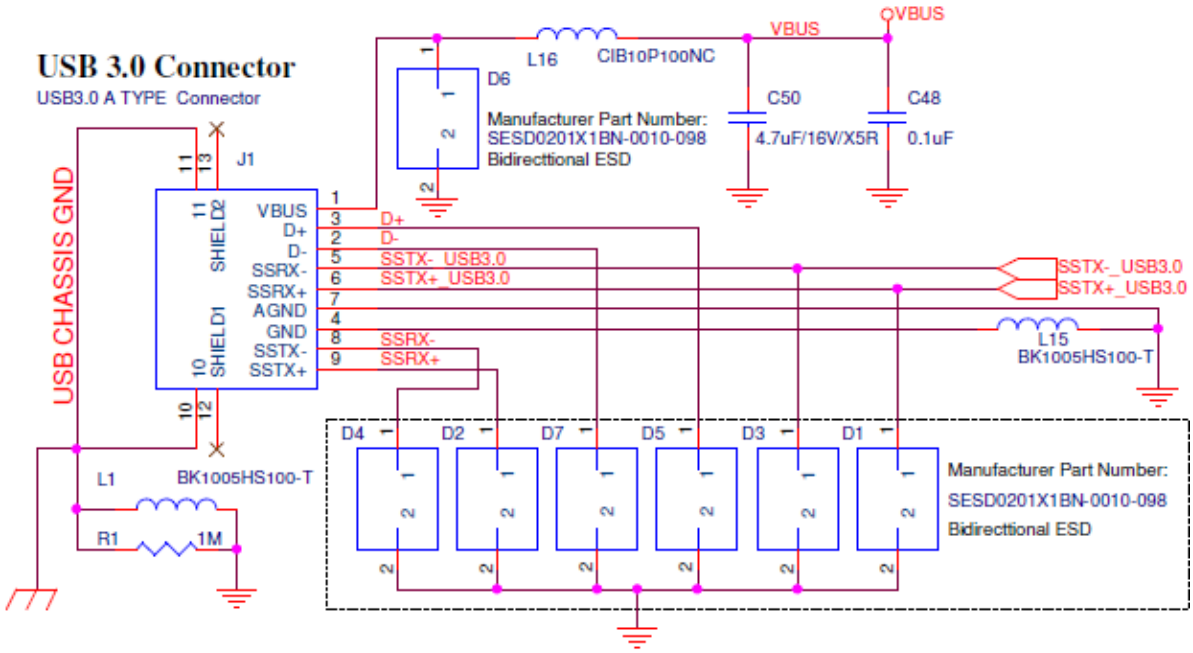

Figure 4-4 is the reference schematic for using a Type-C USB connector with GX3.

Figure 4-4. USB Type-C Connector Schematic

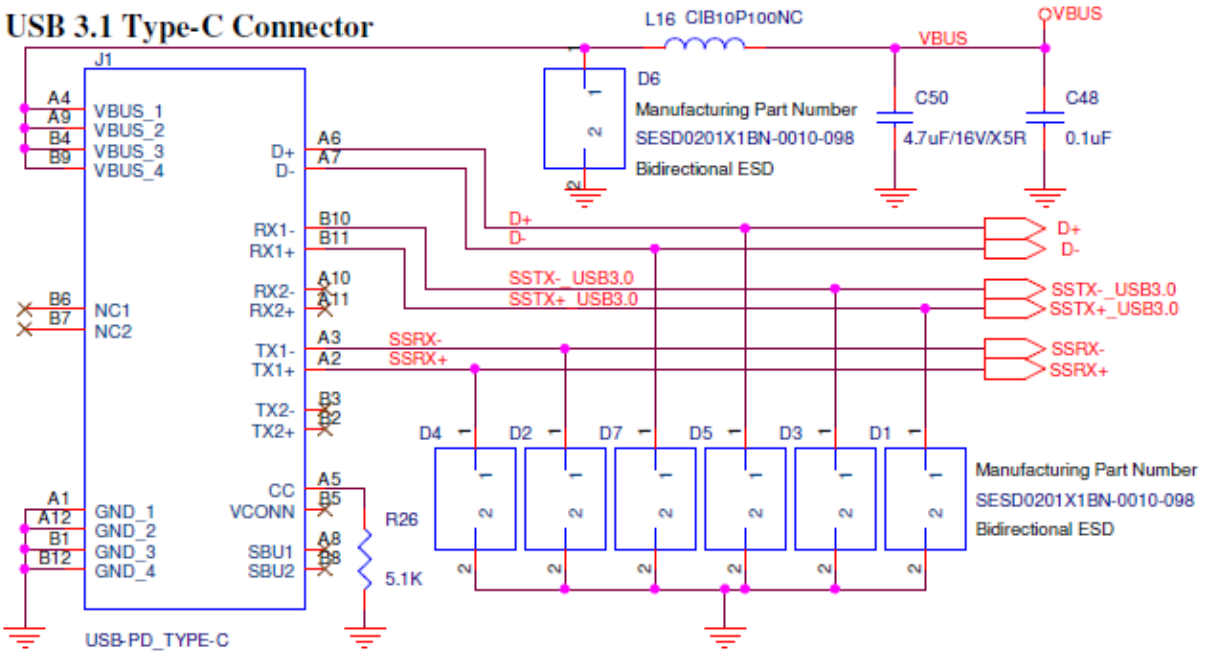

4.3.4 Serial EEPROM

A serial EEPROM (Figure 4-5) is connected to the GX3 via a serial interface.GX3 reads the EEPROM data at boot time.

Figure 4-5. EEPROM Schematic

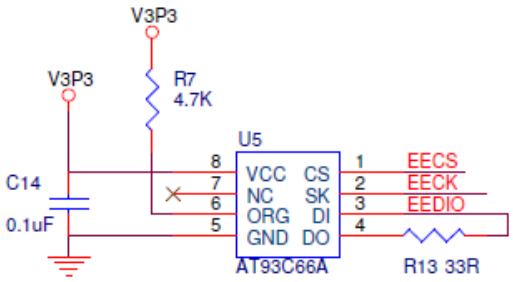

4.3.5 LEDs

The CY4701 RDK includes two LEDs (Figure 4-6):

- LED1: This LED will turn on to indicate that the RDK is connected to the USB 3.0 port. During active data transfers, it will blink, indicating activity over USB 3.0 lines.
- LED2: This LED is the Ethernet activity LED. It will blink to indicate activity on the Ethernet port.

Figure 4-6. LED Schematic

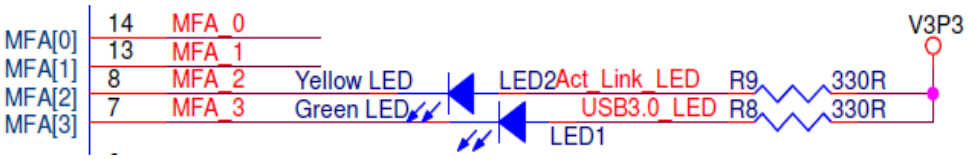

5. Appendix A: Instructions and BOM

A.1 Installing and Binding the Driver Manually

This section explains how to install and bind the GX3 drivers manually if automatic installation has failed. Follow these steps to manually install the drivers.

1. Download the driver from www.cypress.com/gx3software per the installed OS on your system.
2. Connect the GX3 RDK dongle to the USB port of the PC.
3. Open **Device Manager** and right-click on GX3.
4. Click **Update Driver Software** and select **Browse my computer for driver software,** as shown in Figure A-1.

Figure A-1. Update Driver Software

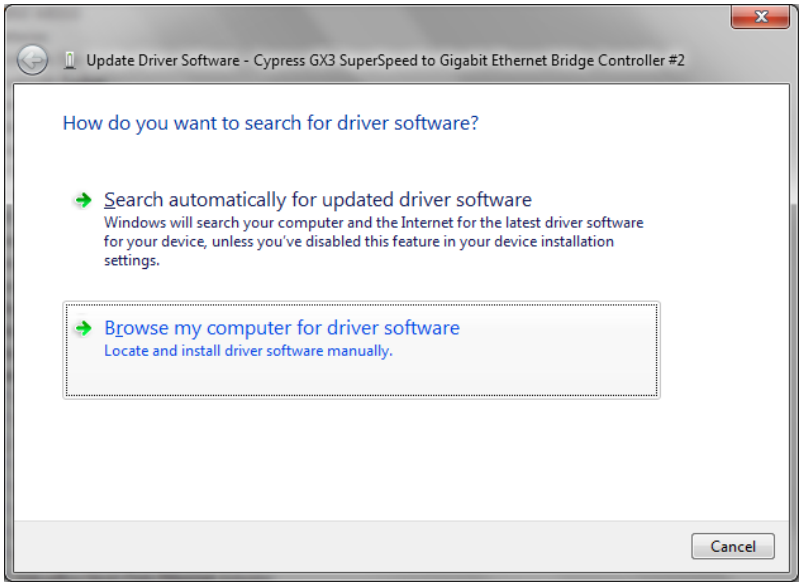

5. Select **Let me pick from a list of device drivers on my computer,** as shown in Figure A-2.

Figure A-2. Manually Select the Driver

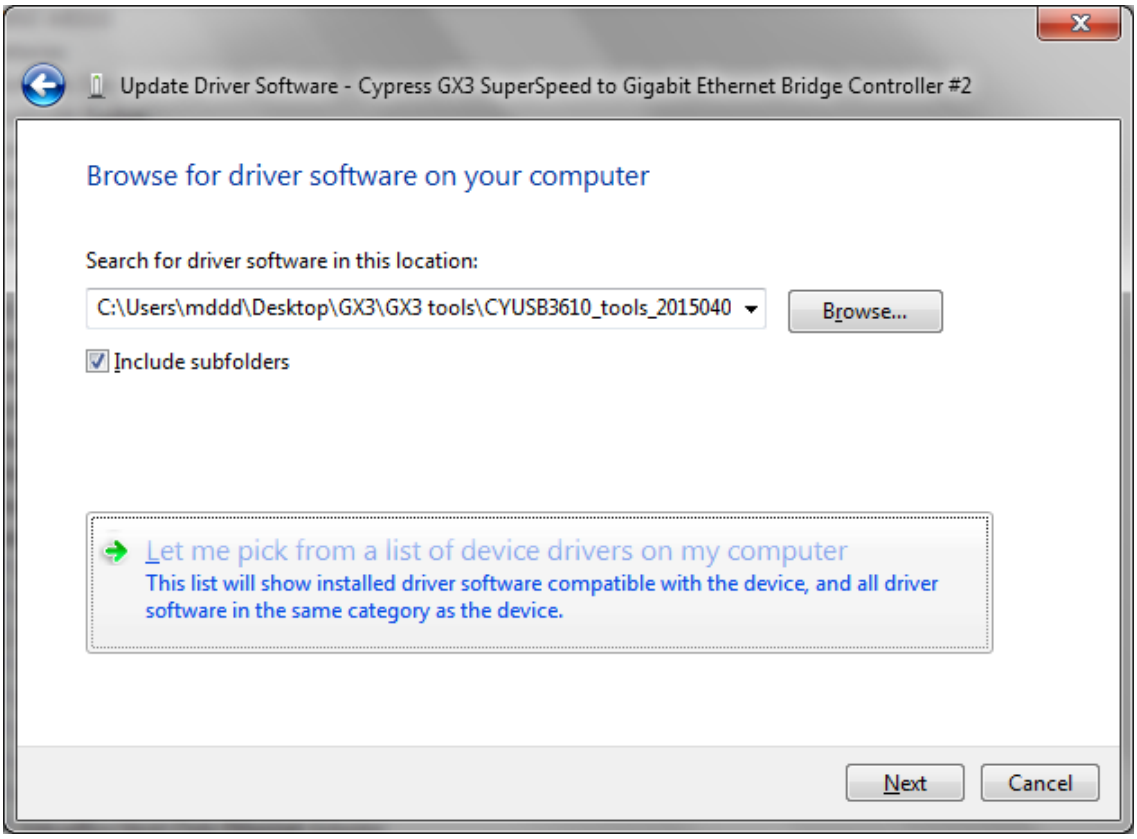

6. Click on **Have Disk** and browse to the location where the drivers were downloaded. Then select the suitable driver based on your OS.
7. Click **Next** and wait until the driver is successfully installed. The previous steps will bind the CYUSB3610 driver to the GX3 device.

A.2 Bill of Materials (BOM)

Qty	Reference	Mfr Part Number
2	C7,C10	CC0402JRNPO9BN150
1	C35	CC0402JRNPO9BN100
1	C47	CC0402JRNPO9BN200
30	C2,C3,C4,C5,C8,C9,C12,C14,C15,C16,C19,C21,C22,C24,C26,C27,C28,C29,C30,C31,C32,C33,C34,C36,C38,C40,C41,C42,C43,C48	CC0402KRX7R7BB104
1	C17	CC0402ZRY5V6BB105
4	C6,C20,C25,C45	CC0603MRX5R6BB106
3	C1,C11,C50	CL21A475KOFNNNE
4	C13,C18,C23,C39	LMK107BBJ106MAHT
7	D1,D2,D3,D4,D5,D6,D7	SESD0201X1BN-0010-098
2	R18,R24	RC0402JR-070RL
1	R13	RC0402JR-0733RL
1	R4	RC0402JR-0722RL
1	R3	RC0402JR-07200RL

Qty	Reference	Mfr Part Number
4	R8,R9,R11,R12	RC0402JR-07330RL
1	R14	RC0402FR-072K49L
6	R6,R7,R15,R16,R22,R25	RC0402FR-074K7L
1	R19	RC0402 FR-07100KL
2	R21,R23	RC0402 FR-07220KL
1	R17	RC1005F4533CS
2	R1,R10	RC0402JR-071ML
6	L1,L10,L11,L12,L13,L15	BK1005HS100-T
1	L16	CIB10P100NC
2	L3,L5	MLP2012H2R2MT0S1
4	L6,L7,L8,L9	ACM2012H-900-2P-T00
1	LED2	LTST-C190YKT
1	LED1	LTST-C190GKT
1	J2	LA1S109-43LF
1	J1	GSB316441CEU
1	U2	CYUSB3610-68LTXC
1	U5	AT93C66A-10SU-2.7
1	U1	RT8075ZQW
1	Y1	NXK25.000AC12F-KAB6
1	SW1	B3U-1000P
3	C37,C44,C46	CC0402KRX7R7BB104
1	C49	CL05C020CB5NNNC
1	R5	RC0402FR-074K7L
1	R20	CRCW040210K0FKED
1	R2	RC0402JR-071ML
1	L14	DLW21HN900SQ2L
2	L2,L4	DLP11TB800UL2L
2	U3,U4	SP3012-04UTG

Revision History

Document Revision History

Document Title: CY4701 EZ-USB® GX3™ Reference Design Guide Document Number: 001-97892			
Revision	**Issue Date**	**Origin of Change**	**Description of Change**
**	08/12/2015	MDDD	Initial version of reference design guide
*A	04/26/2017	AESATMP8	Updated logo and Copyright.

.