Please note that Cypress is an Infineon Technologies Company.
The document following this cover page is marked as “Cypress” document as this is the company that originally developed the product. Please note that Infineon will continue to offer the product to new and existing customers as part of the Infineon product portfolio.

Continuity of document content
The fact that Infineon offers the following product as part of the Infineon product portfolio does not lead to any changes to this document. Future revisions will occur when appropriate, and any changes will be set out on the document history page.

Continuity of ordering part numbers
Infineon continues to support existing part numbers. Please continue to use the ordering part numbers listed in the datasheet for ordering.

HX3 USB 3.0 HUB REFERENCE DESIGN KIT (RDK)

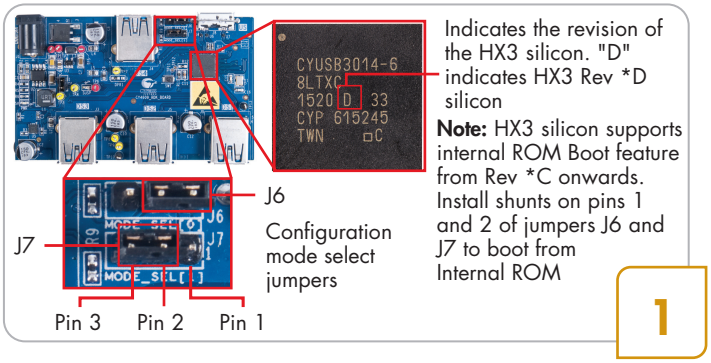

Step 1: Configuring the HX3 Board

- Unpack the kit contents which includes RDK board, 5-V 4-A AC-DC adapter and the USB 3.0 A to micro-B cable
- Ensure that the configuration mode select jumpers (J6 and J7) are set for default operation, as shown above

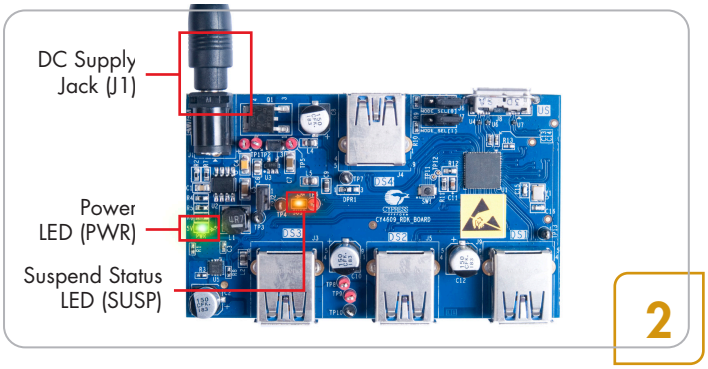

Step 2: Powering the HX3 Board

- Plug the AC-DC adapter into an AC wall power receptacle. Connect the power supply plug to the board's DC supply jack. The power LED (PWR) glows green to indicate that the board is powered and the suspend status LED (SUSP) glows amber to indicate that the hub is in suspend mode

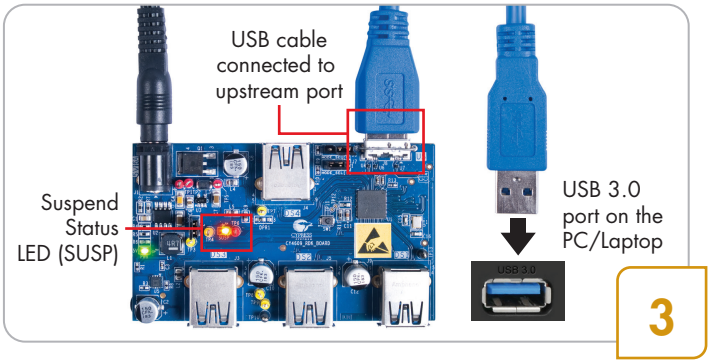

Step 3: Connecting the HX3 Board to a USB 3.0 PC / Laptop

- Connect the micro-B end of the USB cable to the board's upstream port; connect the other end to the USB 3.0 receptacle on a PC / laptop. The SUSP LED* turns off (on a PC / laptop running Windows 7 operating system)

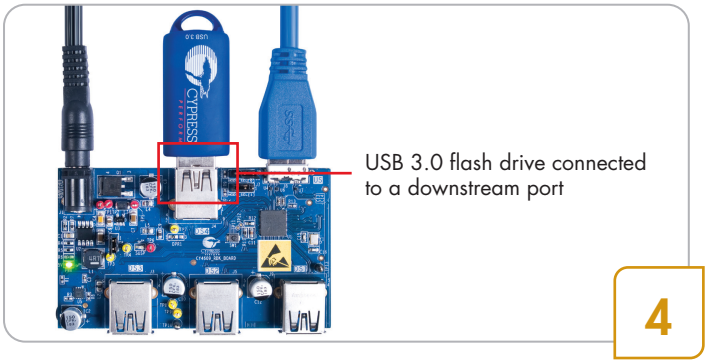

Step 4: Demonstrating USB 3.0 Data Transfer

- Get a USB 3.0 certified flash drive and store a 2 GB file. Connect the flash drive to one of the downstream ports
- Copy the 2 GB file from the flash drive to the PC / laptop to transfer data in USB 3.0 mode

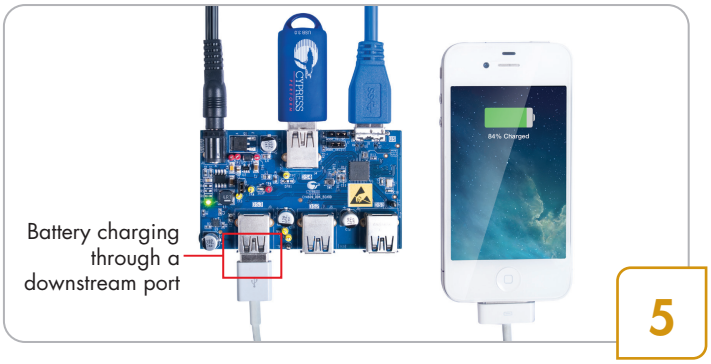

Step 5: Demonstrating Battery Charging

- Connect an Apple device or an USB battery charging device to any of the downstream ports. The HX3 board will charge the connected device

* The behavior of the SUSP LED varies across operating systems. For e.g, in Windows 8, the SUSP LED turns off momentarily and turns on again when there is no further USB activity on the board



Step 6: Demonstrating Ghost Charging™

- Disconnect the USB cable from the upstream port to detach the board from the PC / laptop. The device connected to the downstream port continues to be charged using the Ghost Charging™ feature

  Note: When the Ghost Charging feature is enabled, charging of the device stops momentarily and resumes in 1-2 seconds

HX3 USB 3.0 HUB REFERENCE DESIGN KIT (RDK)

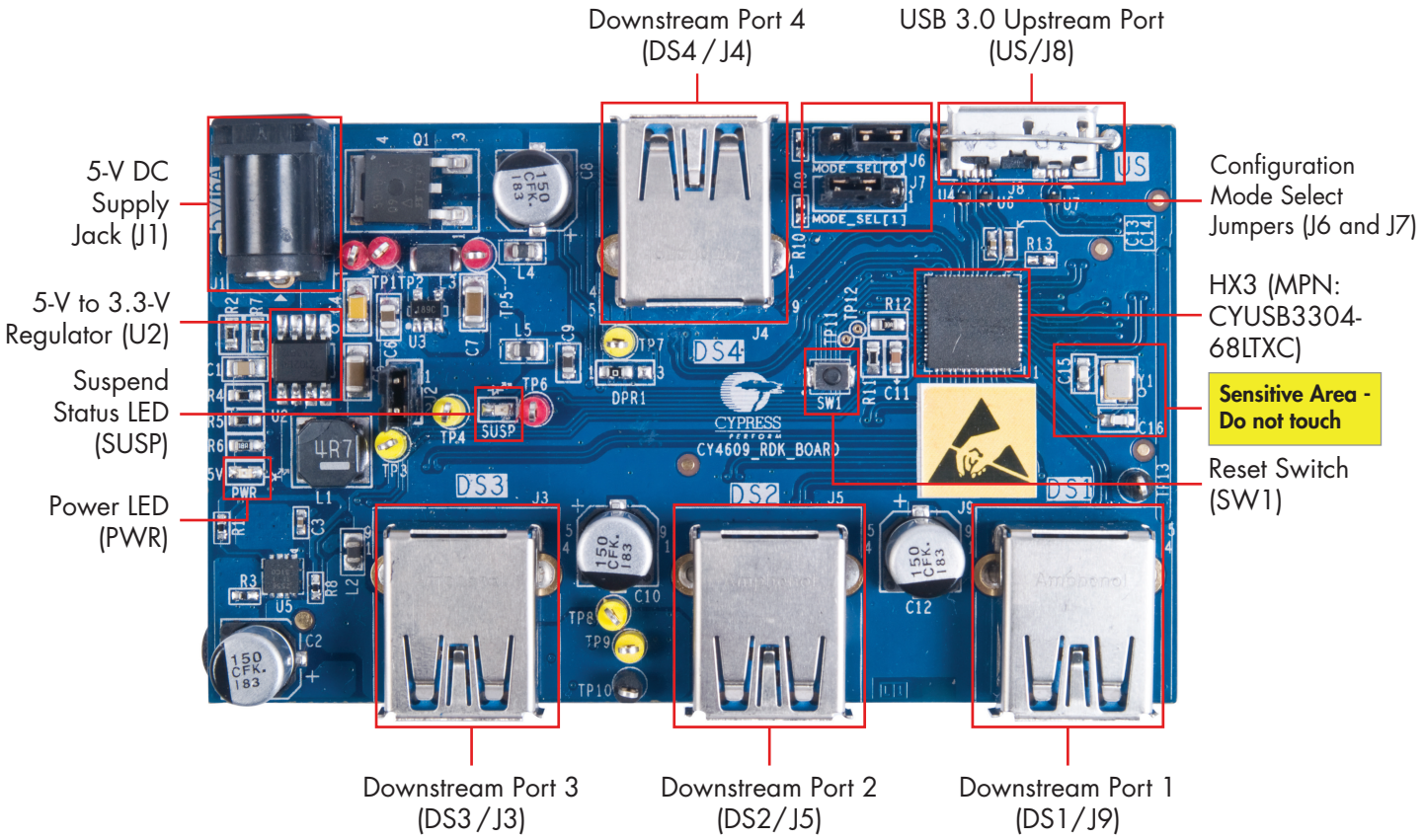

Kit Operation: CY4609 is the reference design kit for CYUSB3304-68LTXC, a 4-port USB 3.0 hub controller from Cypress. The hub controller supports Low-Speed (LS), Full-Speed (FS), Hi-Speed (HS) and SuperSpeed (SS) peripherals on all the four downstream ports. It goes into Suspend state to save power when the upstream port is not connected to a PC / laptop. All the downstream ports are compliant to USB Battery Charging Specification v1.2; they also emulate Apple charging. The hub controller also supports Ghost Charging, a unique feature where the downstream ports emulate Dedicated Charging Port (DCP) to support battery charging even when the upstream port of the board is not connected to a PC / laptop.

The hub controller can be configured for parameters such as vendor ID, product ID, etc. using a Windows based PC tool named Blaster Plus. The configured values are stored in an on-board EEPROM. This tool also can be used to download the latest HX3 firmware to the on-board EEPROM. To access the Blaster Plus tool, the kit user guide, and the hardware design files, download the RDK EXE file (CY4609HX3RDKSetup.exe) from www.cypress.com/CY4609. Click the EXE file and follow the steps in the installer window.

For the latest information about HX3 products, visit www.cypress.com/hx3

© 2020-2021 Cypress Semiconductor Corporation, an Infineon Technologies Company. All rights reserved. All trademarks or registered trademarks referenced herein are the property of their respective owners. 001-90183 Rev.*E