1



Remove the CY4607/CY4607M HX2VL Development Kit from the package and review its contents.

2



Plug the wall mounted power supply into an AC power receptacle providing power in the range 100 V to 240 V, 50 Hz or 60 Hz. Connect the power supply plug to the hub's 'DC Supply' jack.

3



To connect to the PC, plug the USB A to B cable into the hub's upstream connector. Plug the other end of the cable into one of the PC's host controller ports.

The hub is now ready for any low speed, full speed, or high speed devices to be plugged into the ports. The four ports on the hub are labeled Port 1, Port 2, Port 3, and Port 4.

4



Connect a USB device to any of the four downstream ports. Use jumpers J7 to J10 in position 2-3 to enable the corresponding port status LEDs. The red LED glowing indicates that the hub is not in Suspend mode. The green LED glowing indicates that the respective downstream port is enabled.

The amber LED glowing indicates that the port has an exception condition. The HX2VL turns off the corresponding port power and sets the amber LED until the condition is cleared.

HX2VL-CY4607/CY4607M Development Board Details

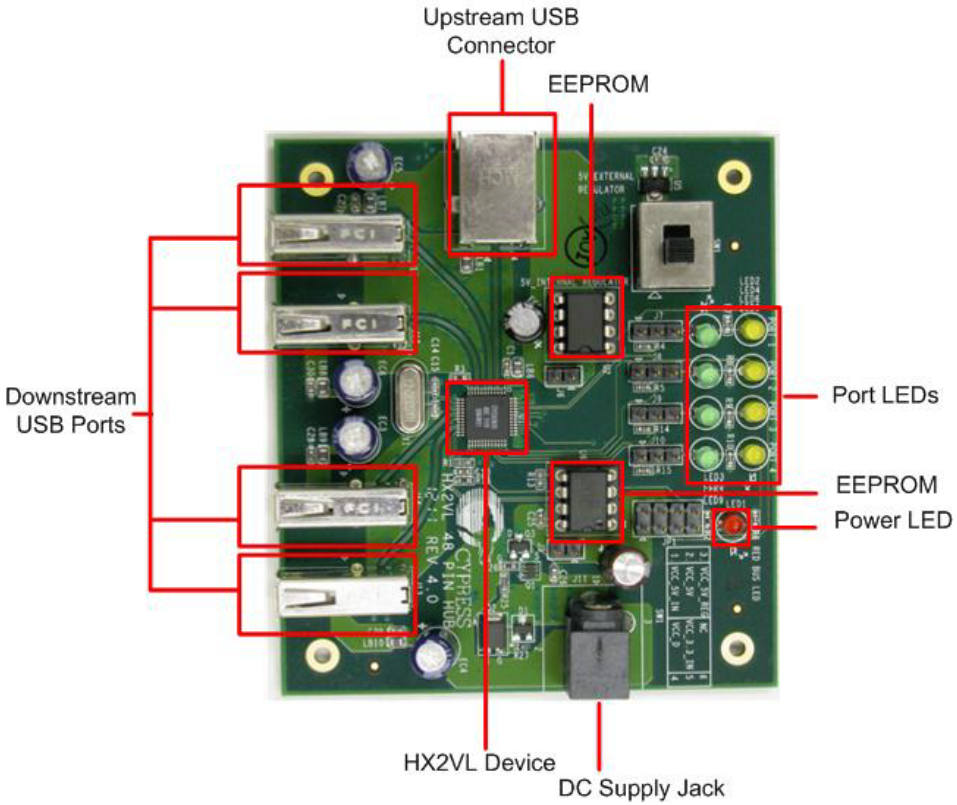

For the latest information about this kit, visit
http://www.cypress.com/go/CY4607 and
http://www.cypress.com/go/CY4607M

© 2011-2012 Cypress Semiconductor Corporation. All rights reserved. All trademarks or registered trademarks referenced herein are the properties of their respective owners.