CY4541 EZ-PD™ CCG4 EVK

STEP 1 Unpack the kit contents

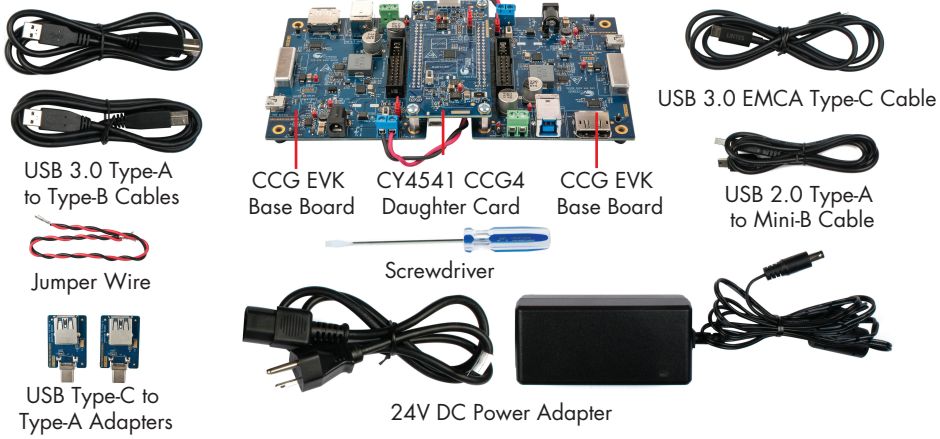

Note: Color of the solder mask used on CCG EVK base boards and CY4541 CCG4 daughter card may vary from the image shown in step1.

STEP 2 Verify that the user LED jumper (J11) is populated on CCG EVK base board 1 (connected to Port 1of CCG4 daughter card) and that the voltage selection jumper (J5) on the CCG4 daughter card is set to 3.3 V (position 1-2). Ensure that the wires are connected with correct polarity between the power provider header (J12) of both the CCG EVK base boards as shown in the figure in step2. Connect the DC power adapter (provided with the kit) to the DC power jack (J1) of either of the CCG EVK base boards.Verify that the setup is as shown in the figure in step2. Plug the other end of the DC power adapter to the AC power socket. LED1 (Green) on the CCG4 daughter card and on both the CCG EVK base boards glow to indicate that the kit is powered. In addition, the LED2 (Orange) on the CCG EVK base board 1 blinks continuously to indicate that CCG4 is powered and active.

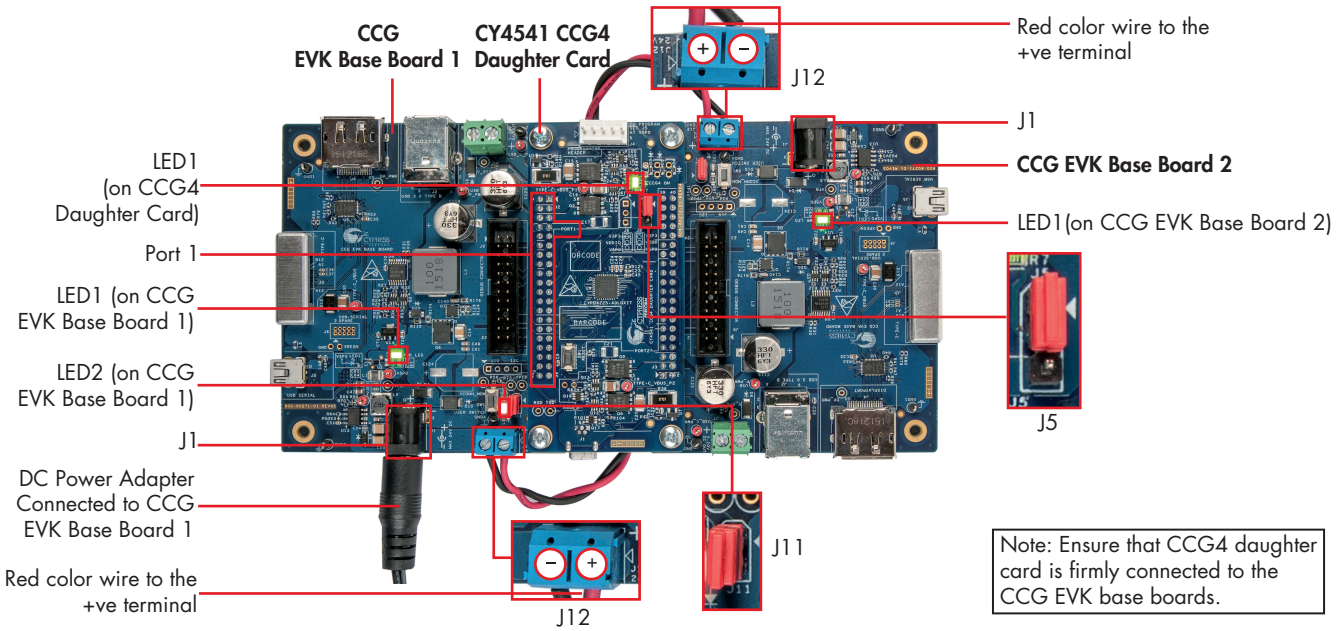

Note: Ensure that CCG4 daughter card is firmly connected to the CCG EVK base boards.

CY4541 EZ-PD™ CCG4 EVK

STEP 3

Connect each USB 3.0 Type-A to Type-B cable from the PC to the USB Type-B port (J2) of each of the CCG EVK base boards. Connect each USB Type-C to Type-A adapter to the USB Type-C port (J3) of each of the CCG EVK base boards. Plug USB pendrives (not provided with the kit) into both the USB Type-C to Type-A adapters. Verify that the setup is as shown in the figure in step3. Observe the enumeration of both the USB pendrives on the PC. Initiate data transfer between the two USB pendrives, and observe the data transfer speed*. This step demonstrates the capability of CCG4 to control two USB Type-C interfaces simultaneously.

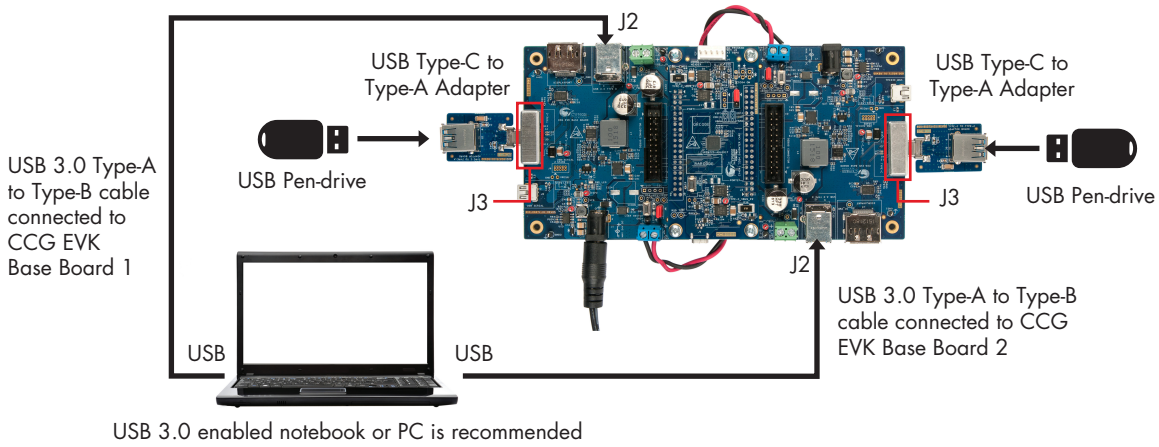

Note that any USB device can be used instead of a pendrive with the setup shown in step3.

* Data transfer speed depends on the type of the USB port (SuperSpeed or High Speed) of the PC, the pendrive (SuperSpeed or High Speed) and the system configuration.

STEP 4

Refer to the CY4541 Kit guide** for a detailed explanation of the Dual Role Port (DRP) and Type-C to Display Port demo using CCG4.

** Download and install the CY4541 CCG4 EVK complete setup from www.cypress.com/CY4541 to access the kit design files and documentation. After the installation, CY4541 Kit Guide.pdf will be available at C:\Program Files (x86)\Cypress\CY4541 CCG4 EVK\1.0\Documentation\CY4541 Kit Guide.pdf (on 64-bit Windows operating systems)

or

C:\Program Files\Cypress\CY4541 CCG4 EVK\1.0\Documentation\CY4541 Kit Guide.pdf (on 32-bit Windows operating systems)

© 2016 - 2017 Cypress Semiconductor Corporation. All rights reserved.
All trademarks or registered trademarks referenced herein are the properties of their respective owners.
002-10266 Rev.*F

CYPRESS EMBEDDED IN TOMORROW™