CY3280-MBR2 CapSense® Express™ with SmartSense™ Auto-Tuning Kit Guide

Doc. # 001-71857 Rev. *C

Cypress Semiconductor
198 Champion Court
San Jose, CA 95134-1709
Phone (USA): 800.858.1810
Phone (Intnl): 408.943.2600
http://www.cypress.com

Copyrights

© Cypress Semiconductor Corporation, 2012-2013. The information contained herein is subject to change without notice. Cypress Semiconductor Corporation assumes no responsibility for the use of any circuitry other than circuitry embodied in a Cypress product. Nor does it convey or imply any license under patent or other rights. Cypress products are not warranted nor intended to be used for medical, life support, life saving, critical control or safety applications, unless pursuant to an express written agreement with Cypress. Furthermore, Cypress does not authorize its products for use as critical components in life-support systems where a malfunction or failure may reasonably be expected to result in significant injury to the user. The inclusion of Cypress products in life-support systems application implies that the manufacturer assumes all risk of such use and in doing so indemnifies Cypress against all charges.

Any Source Code (software and/or firmware) is owned by Cypress Semiconductor Corporation (Cypress) and is protected by and subject to worldwide patent protection (United States and foreign), United States copyright laws and international treaty provisions. Cypress hereby grants to licensee a personal, non-exclusive, non-transferable license to copy, use, modify, create derivative works of, and compile the Cypress Source Code and derivative works for the sole purpose of creating custom software and or firmware in support of licensee product to be used only in conjunction with a Cypress integrated circuit as specified in the applicable agreement. Any reproduction, modification, translation, compilation, or representation of this Source Code except as specified above is prohibited without the express written permission of Cypress.

Disclaimer: CYPRESS MAKES NO WARRANTY OF ANY KIND, EXPRESS OR IMPLIED, WITH REGARD TO THIS MATERIAL, INCLUDING, BUT NOT LIMITED TO, THE IMPLIED WARRANTIES OF MERCHANTABILITY AND FITNESS FOR A PARTICULAR PURPOSE. Cypress reserves the right to make changes without further notice to the materials described herein. Cypress does not assume any liability arising out of the application or use of any product or circuit described herein. Cypress does not authorize its products for use as critical components in life-support systems where a malfunction or failure may reasonably be expected to result in significant injury to the user. The inclusion of Cypress' product in a life-support systems application implies that the manufacturer assumes all risk of such use and in doing so indemnifies Cypress against all charges.

Use may be limited by and subject to the applicable Cypress software license agreement.

PSoC and CapSense are registered trademarks of Cypress Semiconductor Corporation. PSoC Designer, SmartSense, and CapSense Express are trademarks of Cypress Semiconductor Corporation. All other products and company names mentioned in this document may be the trademarks of their respective holders.

Purchase of I2C components from Cypress or one of its sublicensed Associated Companies conveys a license under the Philips I2C Patent Rights to use these components in an I2C system, provided that the system conforms to the I2C Standard Specification as defined by Philips. As from October 1st, 2006 Philips Semiconductors has a new trade name - NXP Semiconductors.

Flash Code Protection

Cypress products meet the specifications contained in their particular Cypress Datasheets. Cypress believes that its family of products is one of the most secure families of its kind on the market today, regardless of how they are used. There may be methods, unknown to Cypress, that can breach the code protection features. Any of these methods, to our knowledge, would be dishonest and possibly illegal. Neither Cypress nor any other semiconductor manufacturer can guarantee the security of their code. Code protection does not mean that we are guaranteeing the product as "unbreakable."

Cypress is willing to work with the customer who is concerned about the integrity of their code. Code protection is constantly evolving. We at Cypress are committed to continuously improving the code protection features of our products.

Contents

1. Introduction **5**

1.1 Kit Contents 5
1.2 Factory Default Configuration 5
1.3 Reference Documents 5
1.4 Acronyms 6
1.5 Document Revision History 6
1.6 Documentation Conventions 6

2. Getting Started **9**

2.1 Before you Begin 9
2.2 Installation Procedure 9

3. Kit Operation **13**

3.1 CY8CMBR2110 CapSense Controller Features 14
3.1.1 Configuring CY8CMBR2110 CapSense Controller 14
3.2 Kit Features 16
3.2.1 SmartSense Auto-Tuning 16
3.2.2 Toggle (Touch ON/OFF) 18
3.2.2.1 Enable Toggle (Touch ON/OFF) 18
3.2.2.2 Test CapSense Buttons with Toggle (Touch ON/OFF) Enabled 18
3.2.3 Flanking Sensor Suppression (FSS) 19
3.2.3.1 Enable Flanking Sensor Suppression 19
3.2.3.2 Test CapSense Buttons with FSS Enabled 19
3.2.4 LED ON Time 20
3.2.4.1 Enable LED ON Time 20
3.2.4.2 Test CapSense Buttons with LED ON Time Enabled 20
3.2.5 Button Auto Reset (ARST) 21
3.2.5.1 Enable Button Auto Reset 21
3.2.5.2 Test CapSense Buttons with ARST Enabled 21
3.2.6 Debounce Control 22
3.2.6.1 Enable Debounce Control 22
3.2.6.2 Test CapSense Buttons for Debounce Control 22
3.2.7 Buzzer Signal Output 23
3.2.7.1 Enable Buzzer Signal Output 23
3.2.7.2 Test CapSense Buttons for Buzzer Signal Output 23
3.2.8 Host Controlled GPOs 24
3.2.8.1 Drive Host Controlled GPOs 24
3.2.8.2 Test Host Controlled GPO LEDs 24
3.2.9 Power-On LED Effects 25
3.2.9.1 Enable Power-On LED Effects 25
3.2.9.2 Test CapSense Buttons with Power-On LED Effects Enabled 25

3.2.10 Button Controlled LED Effects 26
3.2.10.1 Enable Button Controlled LED Effects 26
3.2.10.2 Test CapSense Buttons with Button Controlled LED Effects 26
3.2.11 System Diagnostics 27
3.2.11.1 Enable System Diagnostics 27
3.2.11.2 Test System Diagnostics - CapSense Button Short to Ground 27
3.2.11.3 Test System Diagnostics - CapSense Button to Button Short 28
3.2.11.4 Test System Diagnostics - CapSense Button to Vdd Short 29

4. Hardware 31

4.1 Power Block 32
4.2 CY8CMBR2110 Functional Block 33
4.3 I2C to USB Bridge Block 33
4.4 Connector Details 34
4.4.1 USB-IIC Connector 34
4.4.2 Expansion Connector 34

5. Sample Configurations 35

5.1 Demonstration of Features using Sample Configuration Files 35
5.1.1 Loading Configuration File 1 35
5.1.2 Loading Configuration File 2 37
5.1.3 Loading Configuration File 3 38

A. Appendix 39

A.1 Schematics 39
A.2 Board Layouts 42
A.3 Bill of Materials (BOM) 47

1. Introduction

Thank you for your interest in the CY3280-MBR2 CapSense® Express™ with SmartSense™ Auto-Tuning Kit. This kit is designed to showcase the abilities of the CY8CMBR2110 register configurable CapSense controller. The CY8CMBR2110 controller is equipped with SmartSense, which enables engineers to go from prototyping to mass production without tuning for manufacturing variations in PCB and overlay material properties.

This guide provides details on the kit contents, installation procedure, hardware descriptions, sample configurations, schematics, and the bill of materials.

The kit package includes the EZ-Click customizer tool, which is required to configure the kit. For more information and to download the tool, visit http://www.cypress.com/go/ez-click.

1.1 Kit Contents

- CY3280-MBR2 kit
- Two AAA batteries (unassembled)
- Overlay (3-mm thickness)
- A to Mini-B USB cable
- Screw driver
- Five samples of CY8CMBR2110-LQXI
- CY3280-MBR2 kit CD/DVD
- Flex-PCB (with 1-mm overlay)
- Quick start guide

1.2 Factory Default Configuration

The kit installation folder includes three configuration files that demonstrate several features. The Sample Configurations chapter on page 35 provides details of these configuration files. When shipped, the CY3280-MBR2 board is configured with Sample Configuration1 file.

1.3 Reference Documents

The following documents can be used for reference:

- CY8CMBR2110 CapSense Design Guide
- CY8CMBR2110 Datasheet
- EZ-Click Customizer Tool User Guide
- CY3280-BSM
- Getting Started with CapSense Guide

1.4 Acronyms

Acronym	Definition
BSM	Simple Button Module
CSD	CapSense Sigma-Delta
ESD	Electrostatic Discharge
GUI	Graphic User Interface
IIC	Inter Integrated Circuit
LED	Light Emitting Diode
MBR	Mechanical Button Replacement
NC	Not Connected
PCB	Printed Circuit Board
PC	Personal Computer
USB	Universal Serial Bus

1.5 Document Revision History

Table 1-1. Revision History

Revision	PDF Creation Date	Origin of Change	Description of Change
**	04/04/2012	ZINE	Initial version of kit guide
*A	11/16/2012	ZINE	Updated Getting Started chapter on page 9. Updated all images.
*B	03/04/2013	ZINE	Updated Title Updated all images in Chapter 2 Updated Procedure in Configuring CY8CMBR2110 CapSense Controller on page 14 Updated Configuring CY8CMBR2110 CapSense Controller on page 14 and Kit Features on page 16 Updated Table 4-1 on page 32 Updated Appendix chapter on page 39
*C	05/22/2013	ZINE	Updated Kit Operation chapter on page 13.

1.6 Documentation Conventions

Table 1-2. Document Conventions for Guides

Convention	Usage
`Courier New`	Displays file locations, user entered text, and source code: `C:\ ...cd\icc\`
Italics	Displays file names and reference documentation: Read about the *sourcefile.hex* file in the *PSoC Designer User Guide*.
[**Bracketed, Bold**]	Displays keyboard commands in procedures: [**Enter**] or [**Ctrl**] [**C**]

Table 1-2. Document Conventions for Guides

Convention	Usage
File > Open	Represents menu paths: File > Open > New Project
Bold	Displays commands, menu paths, and icon names in procedures: Click the **File** icon and then click **Open**.
Times New Roman	Displays an equation: 2 + 2 = 4
Text in gray boxes	Describes Cautions or unique functionality of the product.

2. Getting Started

This chapter describes the installation of the CY3280-MBR2 CapSense Express with SmartSense Auto-Tuning Kit.

2.1 Before you Begin

All Cypress software installations require administrator privileges, but this is not required to run the installed software.

1. Shut down any Cypress software that is currently running.
2. Disconnect ICE-Cube or MiniProg1 devices from your computer.

2.2 Installation Procedure

Install the EZ-Click customizer tool to load and run the sample configurations onto the board. You can also build your own configuration file using this tool. Follow these steps to install the CY3280-MBR2 kit package:

1. Insert the kit CD/DVD into the CD/DVD drive of your PC. The CD/DVD is designed to auto-run and the kit installer startup screen appears.

   Note You can also download the latest kit installer from http://www.cypress.com/go/CY3280-MBR2. Three different types of installers are available for download.

   a. CY3280-MBR2_ISO: This file (ISO image) is an archive file of the optical disc provided with the kit. You can use this to create an installer CD/DVD or extract information using WinRar or similar tools.

   b. CY3280-MBR2_ Single Package: This executable file installs the contents of the kit CD/DVD, which includes PSoC Programmer, PSoC Designer, kit code examples, kit hardware files, and user documents.

   c. CY3280-MBR2_Single Package (without prerequisites): This executable file installs only the kit contents, which includes kit code examples, hardware files, and user documents.

2. Click **Install CY3280-MBR2** to start the kit installation, as shown in Figure 2-1.

Figure 2-1. Kit Installer Startup Screen



Note If auto-run does not execute, double-click *cyautorun.exe* file on the root directory of the CD/DVD, as shown in Figure 2-2. To access the root directory, click **Start > My Computer > CY3280-MBR2 <drive:>**.

Figure 2-2. Root Directory of CD/DVD

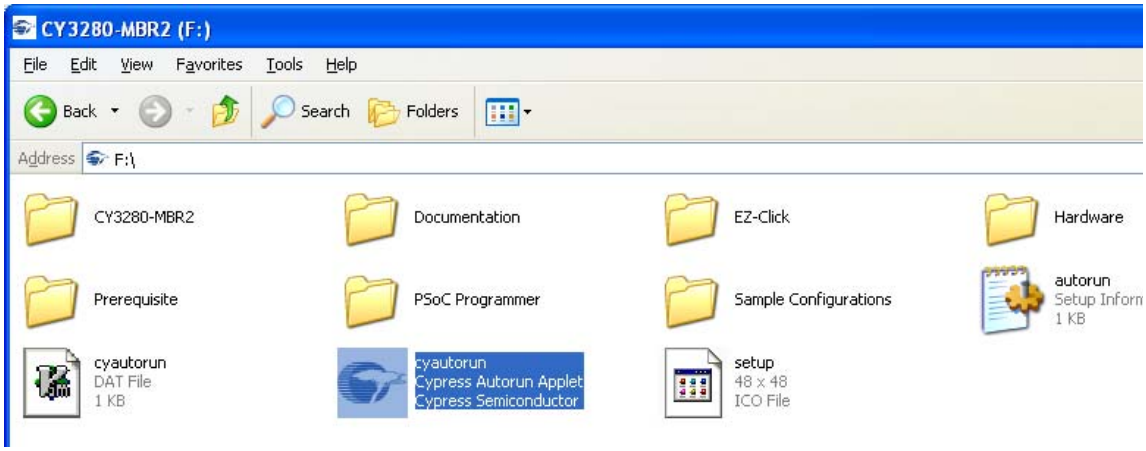

3. On the startup screen, click **Next** to start the installer.
4. The **InstallShield Wizard** screen appears. On this screen, choose the folder location to install the setup files. You can change the folder location for setup files using **Change**, as shown in Figure 2-3.
5. Click **Next** to launch the kit installer.

Figure 2-3. InstallShield Wizard

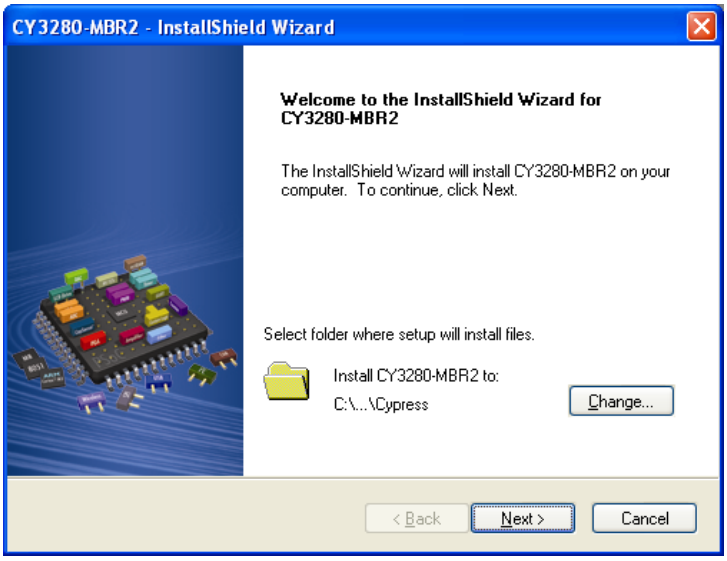

6. On the **Product Installation Overview** screen, select the installation type that best suits your requirement. The drop-down menu has three options: **Typical**, **Complete**, and **Custom**, as shown in Figure 2-4. If you are uncertain, proceed with the default setting (Typical).
7. Click **Next** to start the installation.

Figure 2-4. Installation Type Options

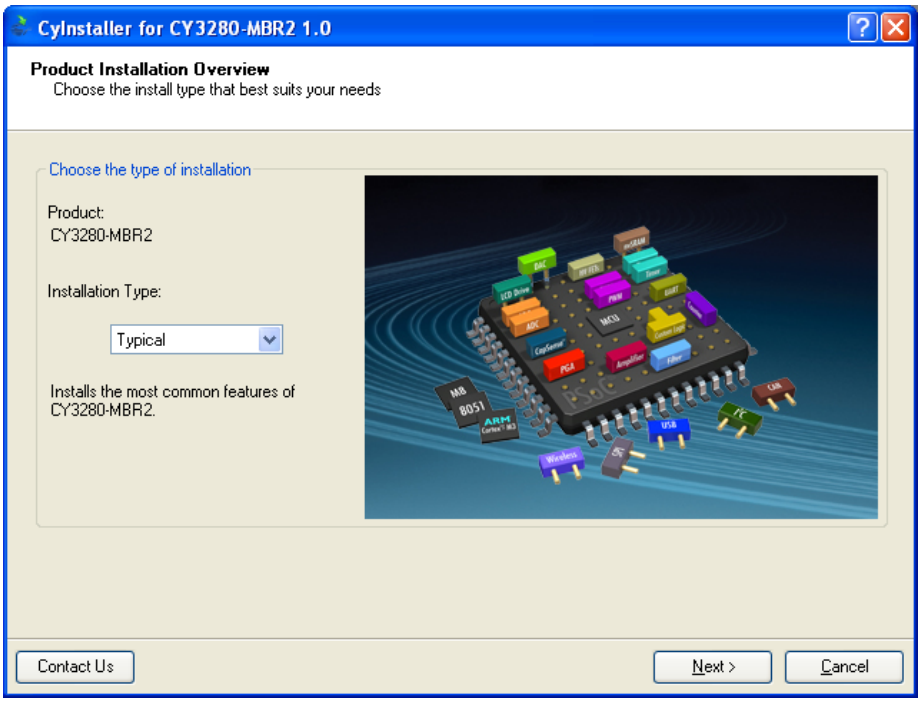

8. When the installation begins, a list of all packages appear on the **Installation Page**. A green checkmark appears against every package that is downloaded and installed, as shown in Figure 2-5.
9. Wait until all the packages are downloaded and installed successfully.

Figure 2-5. Installation Page

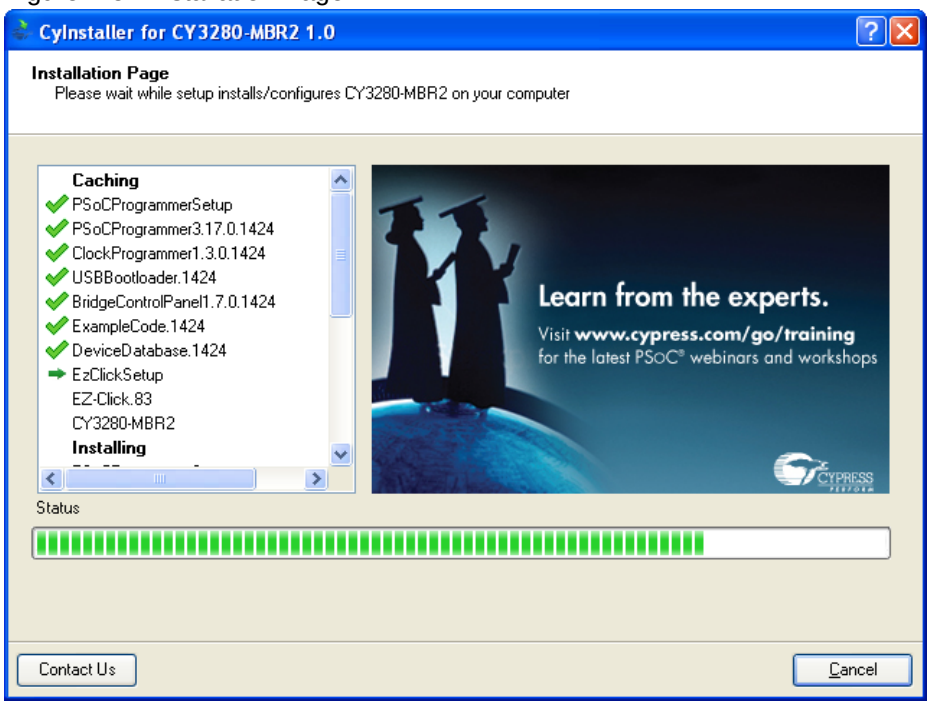

10. Click **Finish** to complete the installation.

Figure 2-6. Installation Complete



3. Kit Operation

The CY8CMBR2110 CapSense controller supports multiple features. The CY3280-MBR2 CapSense Express Kit package includes the hardware required to demonstrate these features. This chapter details these features along with how to use them with the kit.

To start using the kit, open the case using the screw driver and insert the two AAA batteries in the battery holder. Assemble the case using the screw driver provided with the kit. Touch the power button first and ensure the power button, LED1, and LED2 light up. Each CapSense button is mapped to an LED such that activation of a button can be verified by monitoring the LED status. The ON status of LEDs indicate that the CapSense buttons are active.

The Flex-PCB with 10 buttons can be connected to the kit via the 44-pin expansion connector (see Hardware chapter on page 31 for details). Power off the kit before connecting the Flex-PCB. When the kit is powered, a finger touch on the Flex-PCB buttons lights up the respective LED on the kit.

Figure 3-1. CY8CMBR2110 CapSense Controller Kit with Flex-PCB

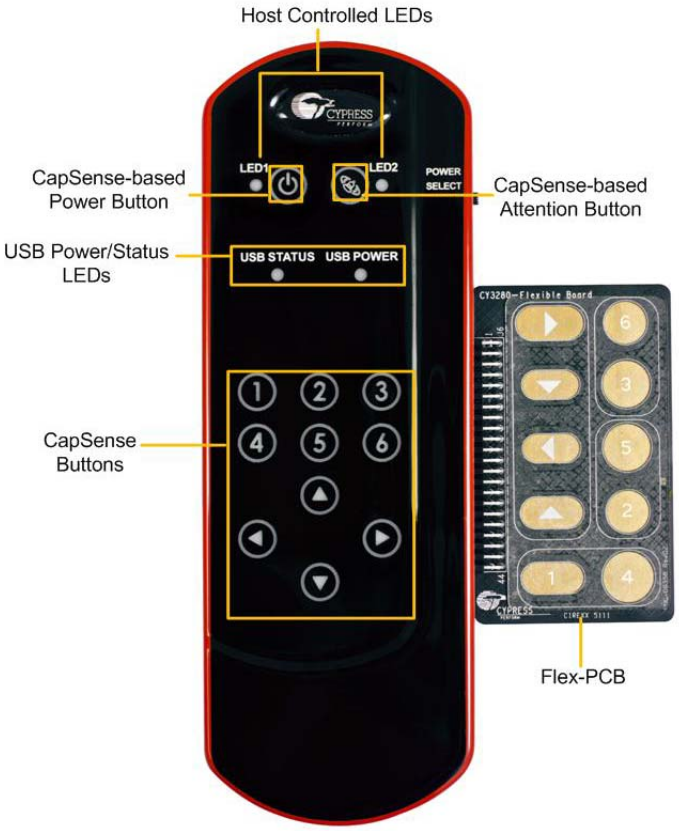

Figure 3-2. Expansion Connector

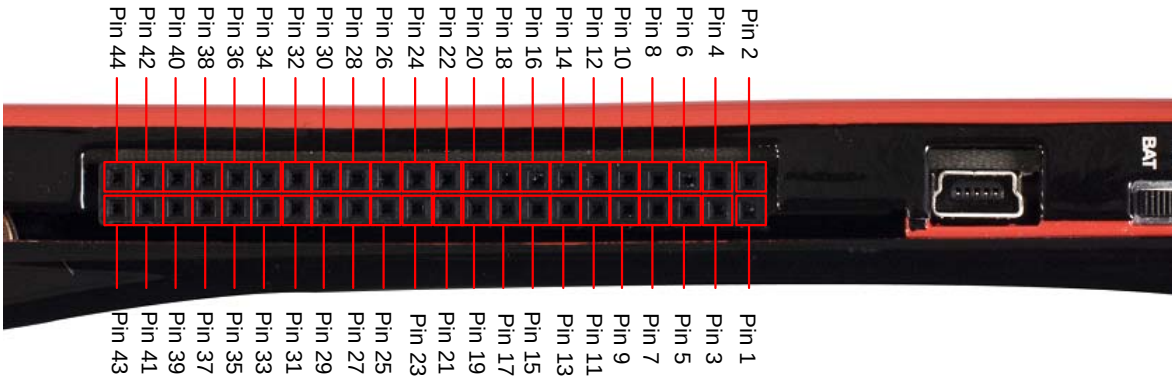

3.1 CY8CMBR2110 CapSense Controller Features

The CY8CMBR2110 controller has the following features:

- SmartSense Auto-Tuning - Supports auto-tuning
- Toggle (Touch ON/OFF) - Allows mechanical button replacement
- Flanking sensor suppression - Provides discrimination between closely spaced sensors
- LED ON time - Provides better visual feedback based on button press
- Button auto reset - Prevents stuck sensor, caused by placing a metal object close to the sensor
- Debounce control - Prevents false button trigger
- Buzzer signal output - Enables connecting the buzzer directly to the device
- Host controlled general-purpose output (GPO) - Enables control by the host (I2C master)
- Power-on LED effects
- Button controlled LED effects
- System diagnostics - supports production testing and debugging

See the CY8CMBR2110 datasheet for more details on these features.

The CY3280-MBR2 CapSense Express Kit can be configured using the EZ-Click customizer tool. Three configuration file projects are included with the kit. Additional configurations can be generated using the tool.

3.1.1 Configuring CY8CMBR2110 CapSense Controller

Follow these steps to configure the CY8CMBR2110 controller:

To configure the kit and test the features supported by it, follow these steps:

1. Connect the CY3280-MBR2 kit to the PC via the USB port using the USB cable and move the switch position to GUI. Ensure USB Status LED glows.
2. Open the EZ-Click customizer tool from the default location: **Start > All Programs > Cypress > EZ-Click** <version> **> EZ-Click**.
3. Create a new project in the EZ-Click customizer tool by clicking on **New Project** under **File** menu.
4. In the Main console tab, choose the **Cypress device** to be **CY8CMBR2110**.

5. Connect the kit to the EZ-Click tool using the following steps.
   a. Click on the **Connect** button on the **Main Console** tab of the EZ-Click customizer tool. The EZ-Click will throw an error as shown. Click **OK** on the pop-up window. Ensure USB Power LED glows.

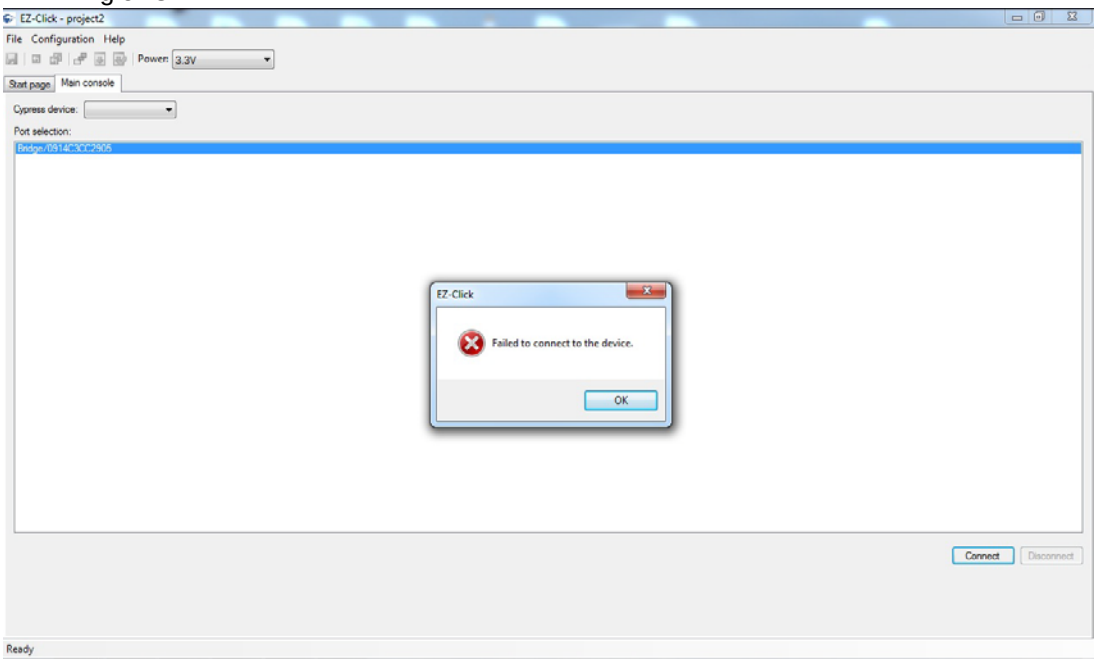

   b. Touch the **Power** button to turn **ON** the kit. Ensure Power button, LED1, LED2 and Attention button glows.
   c. Click the **Connect** button on the **Main Console tab** of the EZ-Click customizer tool. Ensure you see the device connected in the status window of the Main Console tab.
6. Select the number of buttons as desired. You can select up to 10 buttons for any configuration. The numbering starts with 0 in the EZ-Click customizer tool and is mapped to button 1 of the kit. Button 1 in the tool maps to button 2 of the kit and so on.
7. Modify the project to enable features as mentioned in the sections 3.2.2 to 3.2.11.
8. Generate the configuration file by pressing Ctrl + G.
9. Click on **Apply Current Config** under **Configuration** menu in the EZ-Click customizer tool.
10. Touch the **Power** button to turn **ON** the kit and observe the feature as explained in the respective sections.

Note: A sample EZ-Click configuration file Sample Configuration1 file is pre-loaded into the kit. The kit will support the features mentioned in 5.1.1 Loading Configuration File 1 on page 35 by default. To know more about Sample configurations see Sample Configurations on page 35.

3.2 Kit Features

The following sections demonstrate each feature of this device.

3.2.1 SmartSense Auto-Tuning

The CY8CMBR2110 CapSense controller is built with a robust CSD capacitive sensing method and patented SmartSense auto-tuning algorithm. SmartSense Auto-Tuning tunes each sensor automatically at power up; it then monitors and maintains optimum sensor performance during run time. This technology adapts for manufacturing variation in PCBs, environmental conditions, and noise sources such as LCD inverters, AC line noise, and switch-mode power supplies, and automatically tunes them out.

SmartSense auto-tuning feature does not need to be enabled using EZ-Click and is automatically enabled on power-up. This feature can be verified on all the buttons, which are enabled. This kit is pre-loaded with Sample Configuration1, which supports 10 buttons and all 10 buttons demonstrates SmartSense by default.

This feature is demonstrated as follows.

1. Ensure that the Power select switch is in BAT position. Power the kit by touching the Power button.
2. Touch any button and observe that the respective LED lights up without any manual tuning.
3. Power off the kit. Connect the Flex-PCB and then power the kit. When there is a finger touch on the Flex-PCB, the respective LED on the kit lights up without any tuning. The change in sensor parasitic capacitance (Cp) due to the Flex-PCB and the overlay is auto tuned by the SmartSense Auto-Tuning algorithm. Hence, no manual tuning is required.
4. Flex-PCB has a 1 mm overlay pasted on top of it. You can also use the 3 mm overlay provided with the kit on top of 1mm overlay in the same way as explained above to verify SmartSense auto-tuning feature.

   Notes

   - Button 2, Left, and Up navigation buttons on the Flex-PCB may not work with 4 mm overlay (1 mm + 3 mm). The loss of sensitivity of these buttons is due to the overlay thickness and small size of these buttons. To find the required button diameter for particular overlay thinness, refer to the CY8CMBR2110 Design Toolbox.
   - It is recommended not to use the buttons on the main kit while the Flex-PCB is connected to the kit.
   - The exposed Flex-PCB header pins should not be touched while the kit is powered ON. Touching these pins can act as adding the required finger capacitance. This will lead to false triggers.
   - The Flex-PCB is for demonstrating SmartSense Auto-tuning feature and cannot be used for your product design.

Figure 3-3. Demonstration of SmartSense Auto-Tuning with Flex-PCB



SmartSense Auto-Tuning algorithm can also be tested on the Simple Button Module (BSM) board. The BSM board can be connected to the kit and tested for SmartSense Auto-Tuning in the same way as the Flex-PCB. BSM board is not provided as part of this kit. To purchase or know more about BSM board, refer to the Cypress website. The Flex-PCB needs to be disconnected from the kit to test the features mentioned in the subsequent sections.

The following sections demonstrates how to enable and verify various visual and audio features of the kit. These features require the kit to be configured using the EZ-Click customizer tool.

Follow the steps below to observe the features discussed in sections 3.2.2 to 3.2.10.

a. Create a new project in the EZ-Click customizer tool by following the steps 1-7 in section 3.1.1.

b. Modify the project to enable features explained in the following sections.

c. Apply the configuration to the kit by following step 7-9.

d. Verify the feature as explained in the sections 3.2.2 to 3.2.10.

Ensure that you have a new project every time you verify a different feature. Enabling two or more features may or may not work at the same time. See the CY8CMBR2110 datasheet to know about the features, which will not work together.

3.2.2 Toggle (Touch ON/OFF)

3.2.2.1 Enable Toggle (Touch ON/OFF)

Go to the **Device Config** tab; select the **Toggle (Touch ON/OFF)** checkbox to enable the toggle feature for the desired number of buttons. The Figure 3-4 shows toggle feature enabled in four buttons.

Figure 3-4. Toggle (Touch ON/OFF) Feature GUI

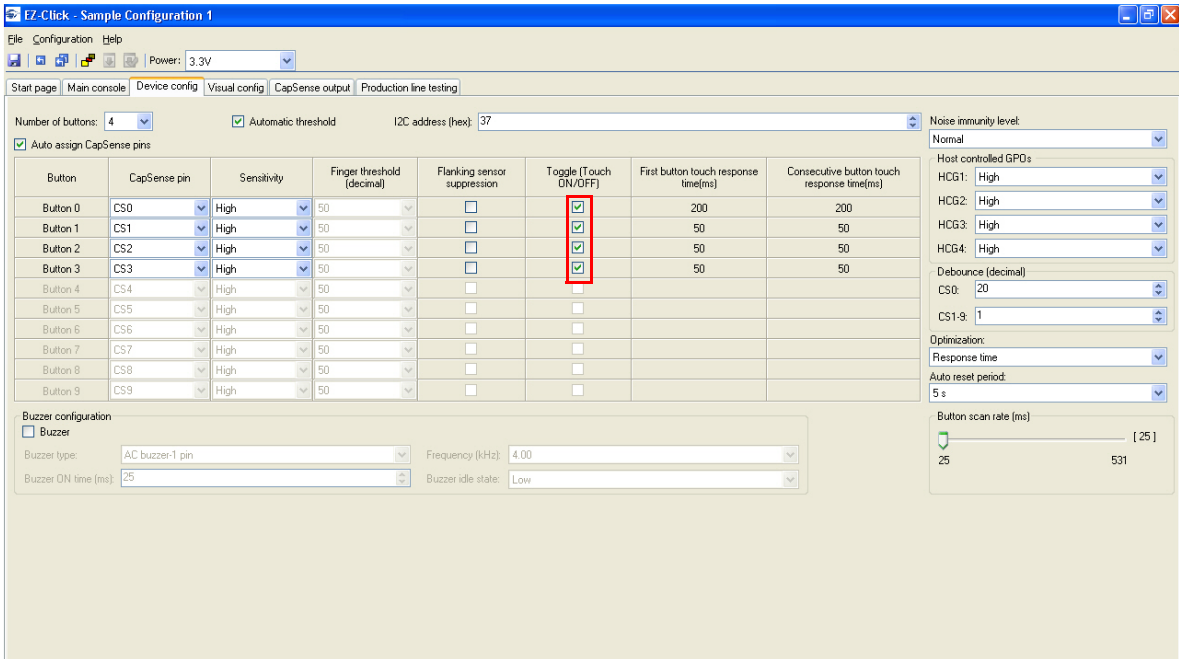

3.2.2.2 Test CapSense Buttons with Toggle (Touch ON/OFF) Enabled

1. Touch a CapSense button for which the Toggle (Touch ON/OFF) feature is enabled; the respective LED turns on.
2. Touch the same button again; the LED turns off.
3. On the next touch, the LED goes on again.

Figure 3-5. Toggle (Touch ON/OFF) Enabled



Button LED glows on touch

Button is “on” even after touch is removed

Button goes “off“ on second touch

3.2.3 Flanking Sensor Suppression (FSS)

3.2.3.1 Enable Flanking Sensor Suppression

Go to the **Device Config** tab; select the **Flanking Sensor Suppression** checkbox to enable the FSS feature for the desired number of buttons.

Figure 3-6. FSS Enabled

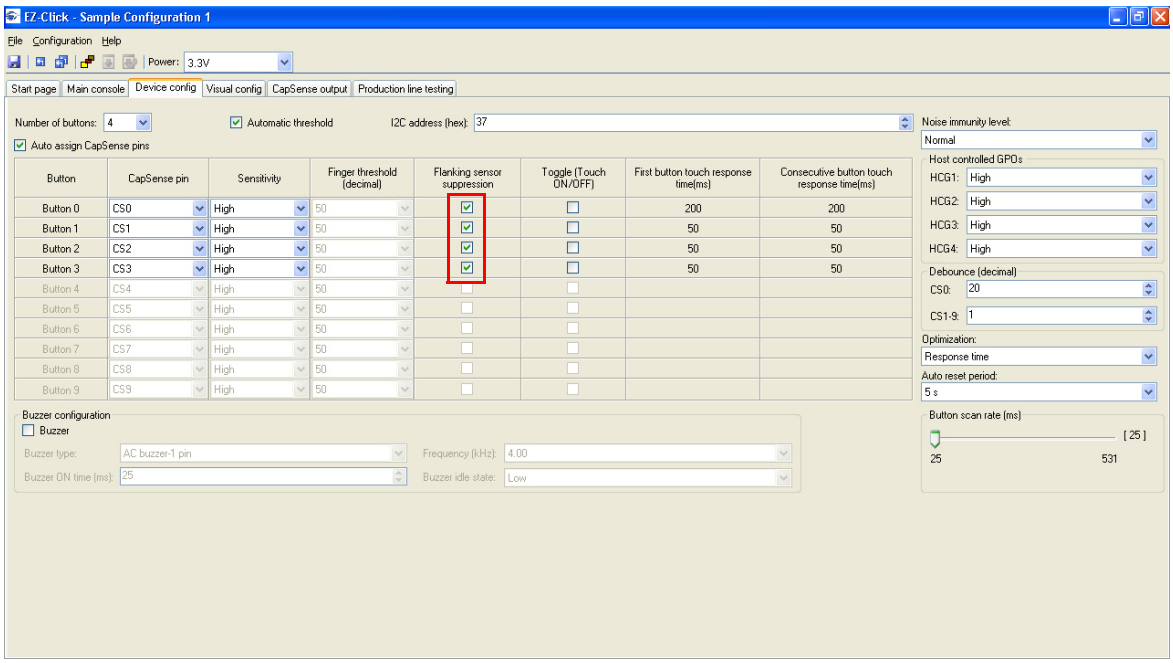

3.2.3.2 Test CapSense Buttons with FSS Enabled

1. Touch a FSS-enabled CapSense button; the respective LED turns on.
2. Without removing the touch, touch another FSS-enabled button; the LED does not glow for the second button.
3. Remove the touch from the first button. Now, touch any other FSS-enabled button; the respective LED glows.

Figure 3-7. FSS Enabled



Button LED glows on touch

Second button does not glow if the touch on the first button is continued

Second button glows after the finger from the first touched button is removed

3.2.4 LED ON Time

3.2.4.1 Enable LED ON Time

Go to the **Visual Config** tab; select the **LED ON time** checkbox to enable this feature. This is a global setting applicable for all CapSense buttons. To set the time, configure the **LED ON time** menu below the checkbox.

Figure 3-8. LED ON Time Enabled

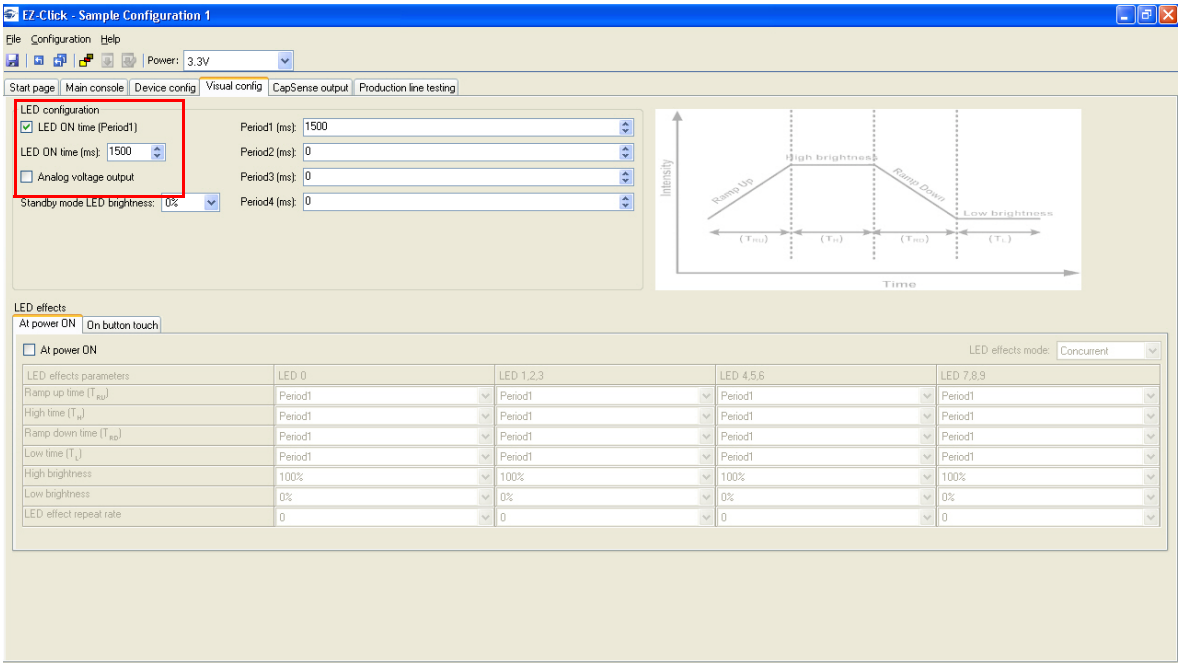

3.2.4.2 Test CapSense Buttons with LED ON Time Enabled

Touch any CapSense button; the respective LED turns on. When the finger is released, the LED turns off after the duration specified in **LED on time** (msec) in the **Visual Config** tab.

Figure 3-9. LED ON Time Enabled

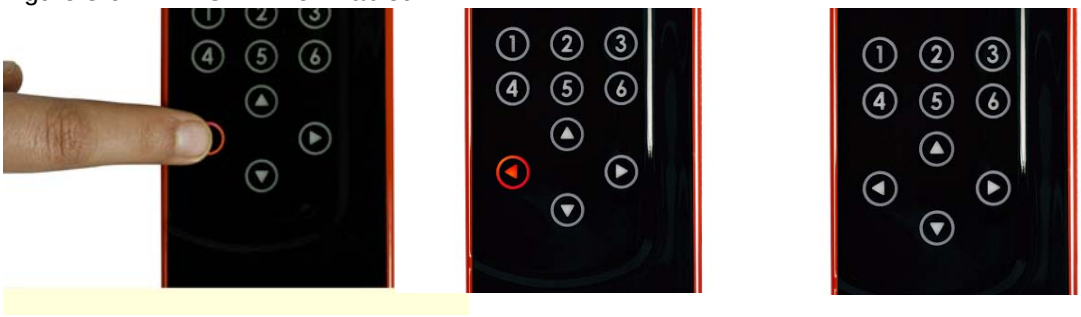

Button LED glows on touch

Button is “on” even after touch is removed

Button goes “off” after the LED On time

3.2.5 Button Auto Reset (ARST)

3.2.5.1 Enable Button Auto Reset

Go to the **Device Config** tab; select the **Auto reset period** menu to enable this feature. The reset time can be set as either 5 or 20 seconds.

Figure 3-10. ARST Enabled

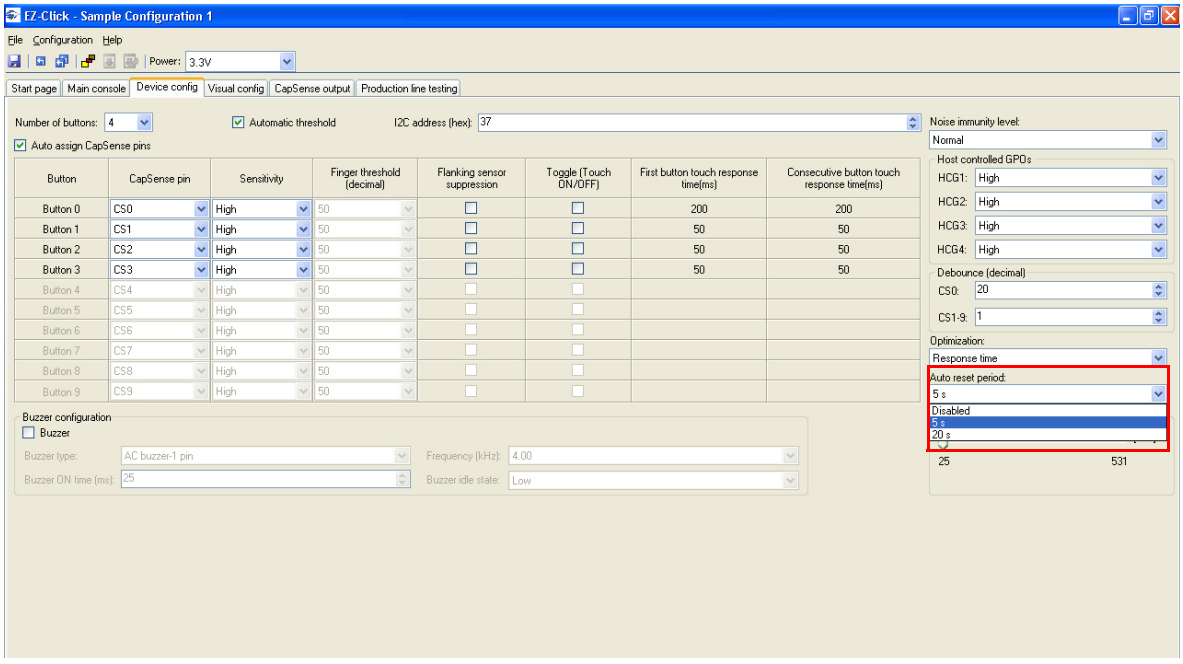

3.2.5.2 Test CapSense Buttons with ARST Enabled

Touch any CapSense button; the respective LED turns on. Do not release the button; keep the finger pressed for 5 seconds or 20 seconds, as selected. Notice that the LED turns off automatically after 5 seconds or 20 seconds according to the setting applied. Release the buttons and touch the same buttons again, it works as usual.

Figure 3-11. ARST Enabled



Button LED glows on touch



Button goes off when continuously touched for more than the ARST

3.2.6 Debounce Control

3.2.6.1 Enable Debounce Control

Go to the **Device Config** tab; enter the required debounce number in the **Debounce** menu. Enter a value from 1 to 255 in the option available for CS0 and CS1-CS9.

Figure 3-12. Setting Debounce Parameter

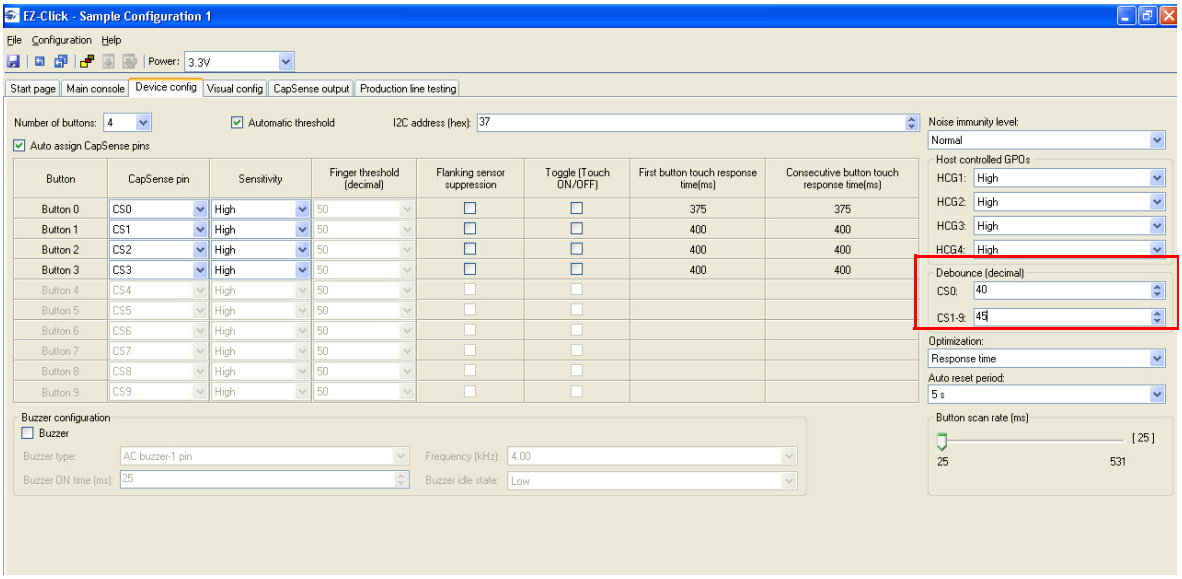

3.2.6.2 Test CapSense Buttons for Debounce Control

This parameter determines the minimum duration for which the finger must be present on the button to report a "Sensor On".

For example, put 55 in the debounce parameter for CS1-CS9. To calculate the time in milliseconds, the factor 35 should be multiplied with the debounce parameter value. This factor value is only for default settings. For other settings, see the CY8CMBR2110 datasheet. In this case, any CapSense button should be touched more than (35 × 55) = 1925 ms to turn it on.

Figure 3-13. Debounce Enabled

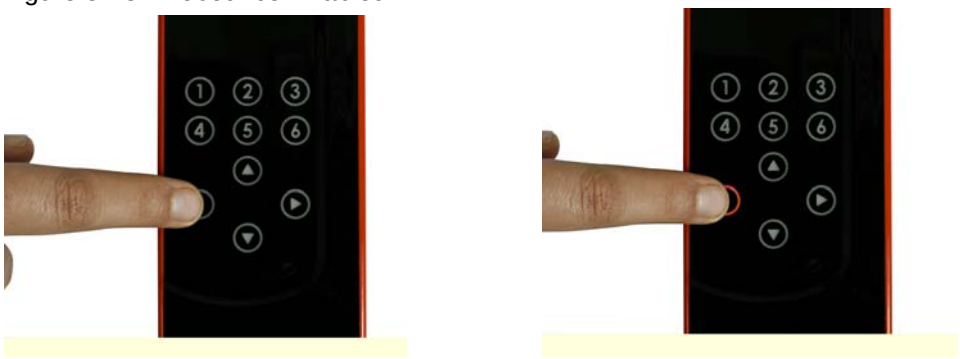

Button does not glow if pressed for less than the time set in the Debounce parameter settings

3.2.7 Buzzer Signal Output

3.2.7.1 Enable Buzzer Signal Output

Go to the **Device Config** tab; enable the feature by selecting the **Buzzer** checkbox in the **Buzzer Configuration** section of the page. Set the frequency, number of pins, type (AC buzzer-1 pin or AC buzzer-2 pin), and output duration timing using the respective menu options. Buzzer idle state indicates the state of the buzzer pins when buzzer is not ON. You can configure your buzzer to be in sinking or sourcing mode by selecting HIGH or LOW respectively as your Buzzer Idle state.

Figure 3-14. Buzzer Signal Output Enabled

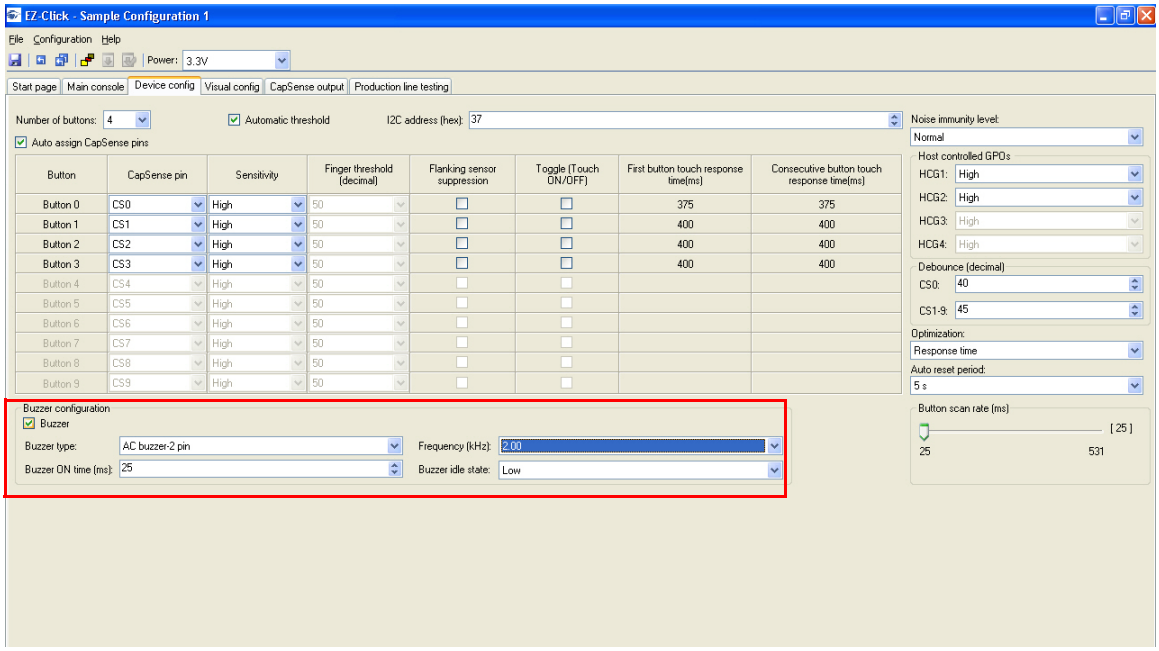

3.2.7.2 Test CapSense Buttons for Buzzer Signal Output

The button touch gives an audio feedback. The characteristics of the buzzer sound, such as frequency and duration can be observed according to the settings.

3.2.8 Host Controlled GPOs

3.2.8.1 Drive Host Controlled GPOs

Go to the **Device Config** tab; drive host controlled GPOs, HCG1 and HCG2, by selecting the **Low** or **High** options in the drop-down. The kit does not have any LEDs mapped to HCG3 and HCG4. These GPOs use the same pins as the buzzer output.

By default, the LEDs light up after the device is powered.

Note HCG3 and HCG4 are not available when the AC buzzer-2 pin is enabled. When the AC buzzer-1 pin is enabled, HCG4 is disabled.

Figure 3-15. Host Controlled GPOs GUI

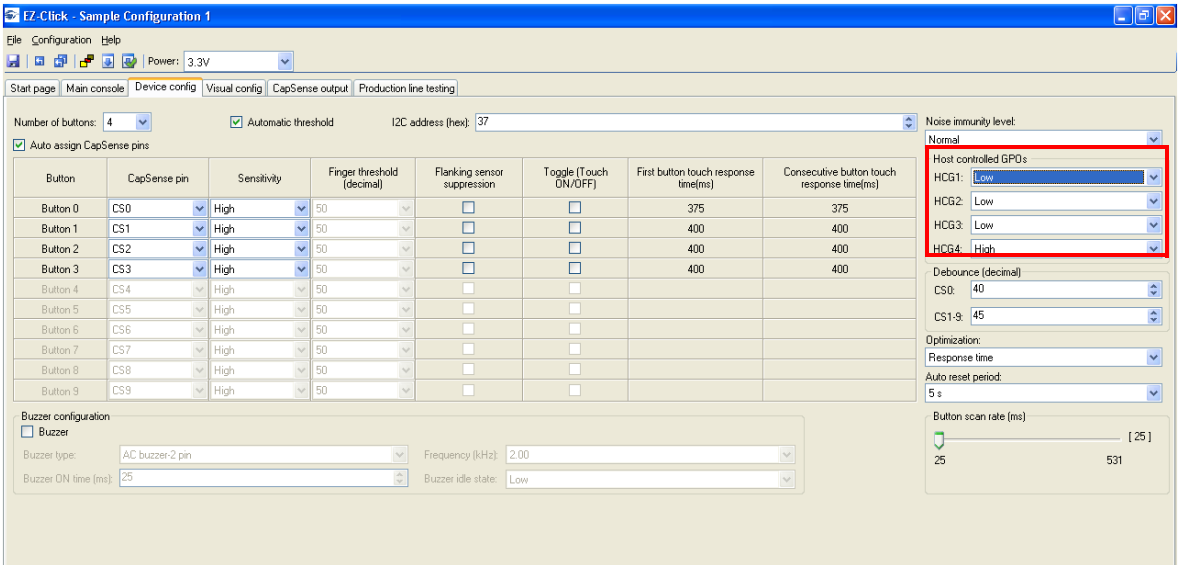

3.2.8.2 Test Host Controlled GPO LEDs

Drive the HCG1 and HCG2 to **Low** in the EZ-Click tool to see the respective LEDs light up. Driving the HCGs **High** will turn off the LEDs.

Figure 3-16. Host Controlled GPO LEDs



3.2.9 Power-On LED Effects

3.2.9.1 Enable Power-On LED Effects

Go to the **Visual Config** tab; select the **At Power On** checkbox under **LED Effects** to enable the feature. Select the values for different parameters such as ramp up time, ramp down time, high time, low time, high brightness, low brightness, and LED effect repeat rate in the **At Power On** tab.

Figure 3-17. Power-On LED Effects Enabled

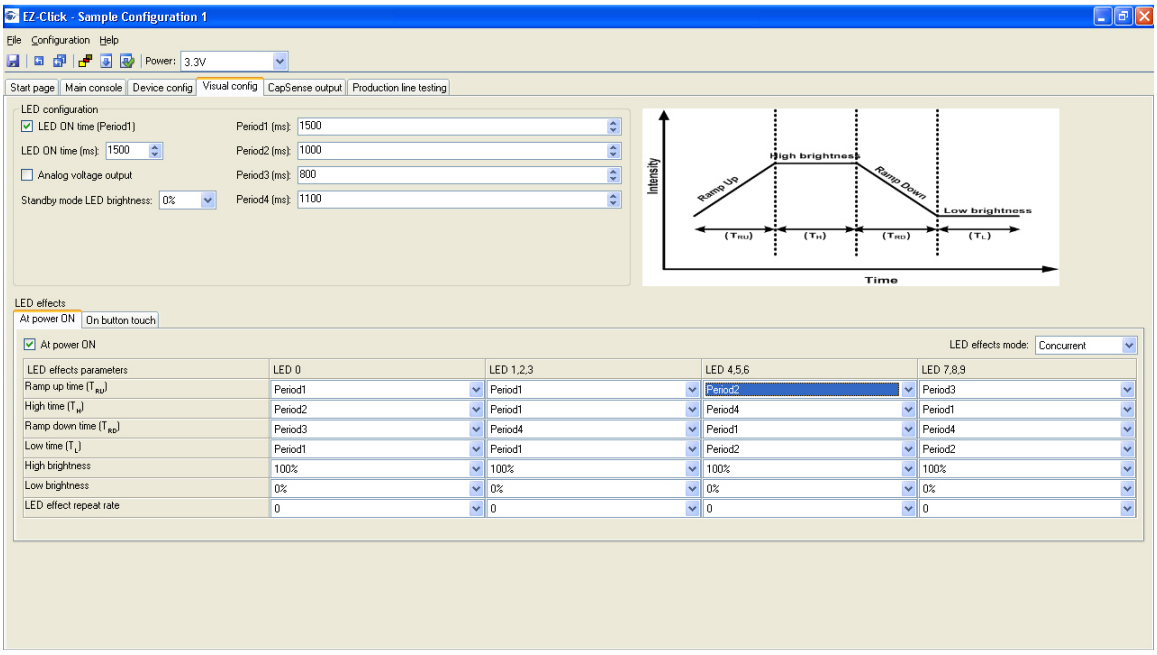

3.2.9.2 Test CapSense Buttons with Power-On LED Effects Enabled

Observe the LED effects according to the configured setting at every power cycle.

Figure 3-18. Power-On LED Effect Pattern

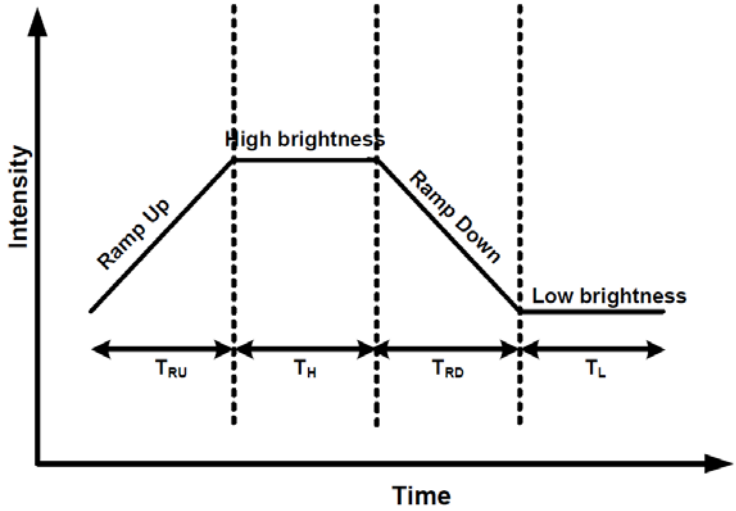

T_{RU} - Ramp up time

T_H - High brightness time

T_{RD} - Ramp down time

T_L - Low brightness time

3.2.10 Button Controlled LED Effects

3.2.10.1 Enable Button Controlled LED Effects

Go to the **Visual Config** tab; select the **On Button Touch** checkbox under **LED Effects** to enable the feature. Select the values for different parameters such as ramp up time, ramp down time, high time, low time, high brightness, low brightness, and LED effect repeat rate in the **On Button Touch** tab.

Figure 3-19. Button Controlled LED Effects Enabled

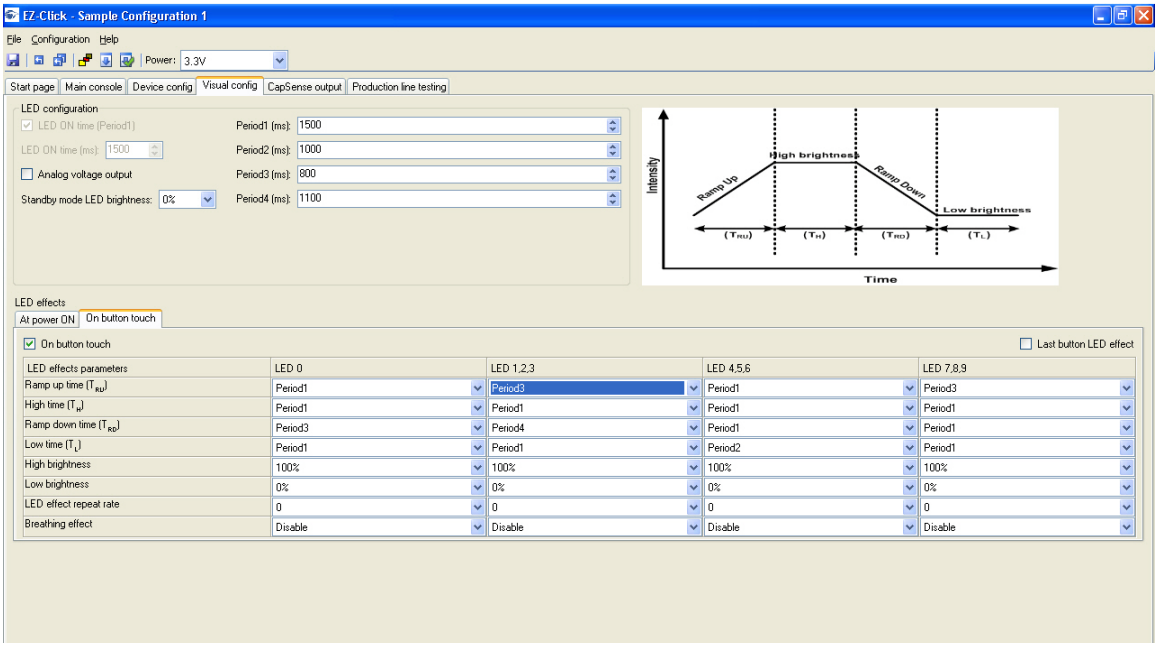

3.2.10.2 Test CapSense Buttons with Button Controlled LED Effects

On every button touch, the respective LED effects can be observed according to the configured setting.

Figure 3-20. Button Controlled LED Effects Pattern

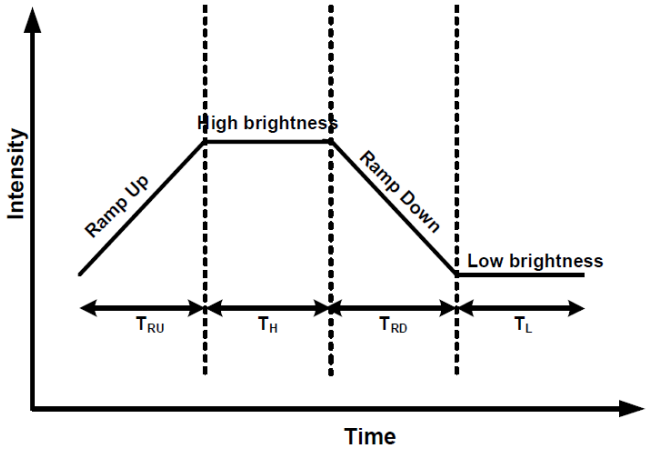

3.2.11 System Diagnostics

3.2.11.1 Enable System Diagnostics

The System Diagnostics feature is enabled in the CY8CMBR2110 CapSense controller by default; no change is needed in the kit. This feature sends out a 5-ms pulse on the GPO corresponding to a faulty sensor. The GPO pins are connected via the 44-pin expansion connector, which can be probed to observe the 5-ms pulse. See Connector Details on page 34 for details of the expansion connector and to know the pin associated with each button and GPO. The pin number can be counted starting from the lower pin on the USB connector side, as shown in the following figures. Note that all odd numbered pins are at the bottom half of the connector.

The system diagnostics feature can also be observed in the EZ-Click Customizer Tool.

3.2.11.2 Test System Diagnostics - CapSense Button Short to Ground

Follow these steps:

1. Touch the power button to turn off the kit.
2. Connect a wire between pin #3 and pin #5 of 44-pin expansion connector. This shorts the button #5 sensor to ground.
3. Touch the power button to turn on the kit.

The CapSense controller executes the System Diagnostics routine on power up and detects the sensor shorted to ground. Observe a pulse of 5 ms width on the GPO #5 pin, which is also visible on the corresponding LED. This indicates that button #5 is shorted to ground. The CapSense controller disables the button sensors that are shorted to ground. Touch button #5 and see that the corresponding LED is not turned on. Other buttons work normally.

Figure 3-21. Shorting Button #5 (pin #3) to Ground (pin #5)



To observe the feature in GUI, go to **Production line testing** tab and click on the **Start test** button.

Figure 3-22. System Diagnostics GUI - Shorting Button to Ground

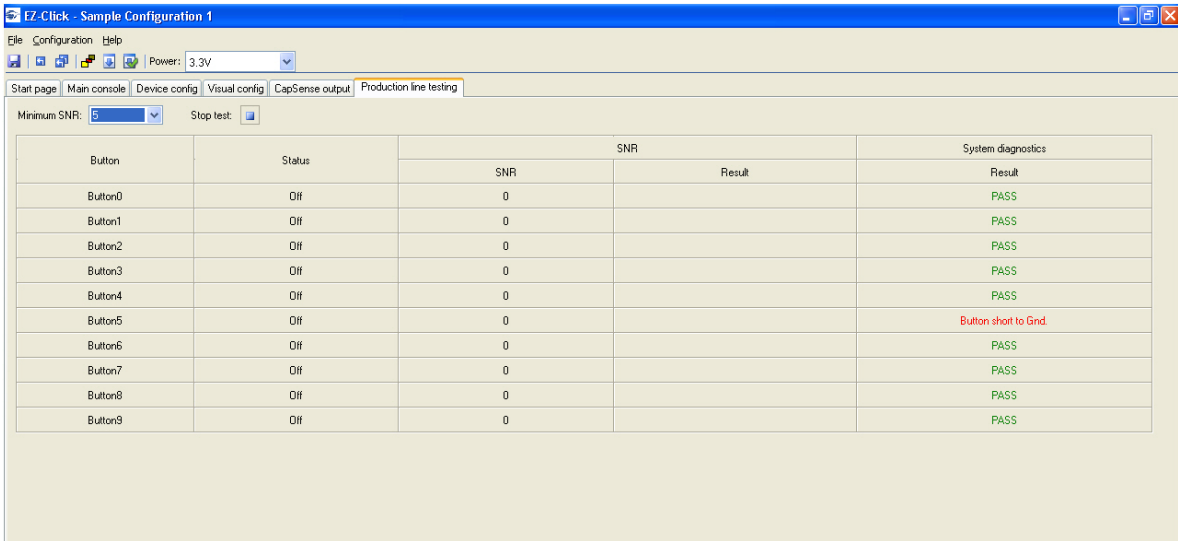

3.2.11.3 *Test System Diagnostics - CapSense Button to Button Short*

Follow these steps:

1. Touch the power button to turn off the kit.
2. Connect a wire between pin #3 and pin #9 of the 44-pin expansion connector. This shorts button #5 and button #2 sensors.
3. Touch the power button to turn on the kit.

Note: The button numbering in the Production Testing tab in the EZ-Click customizer tool starts with 0, which is linked to button 1 of the kit. Similarly, button 1 in the tab is mapped to button 2 of kit and so on.

The CapSense controller executes the System Diagnostics routine on power up and detects the sensor to sensor short. Observe a pulse of 5 ms width on the GPO #5 and GP0 #2 pins, which is also visible on the corresponding LEDs. This indicates that button #5 is shorted to button #2. The CapSense controller disables the button sensors that are shorted to each other. Touch button #5 and button #2; note that the respective LEDs are not turned on.

Other buttons work normally.

Figure 3-23. Shorting Button #5 (pin #3) to Button #2 (pin #9)



To observe the feature in GUI, go to **Production line testing** tab and click on the **Start test** button.

Figure 3-24. System Diagnostics GUI - Shorting Button to Button

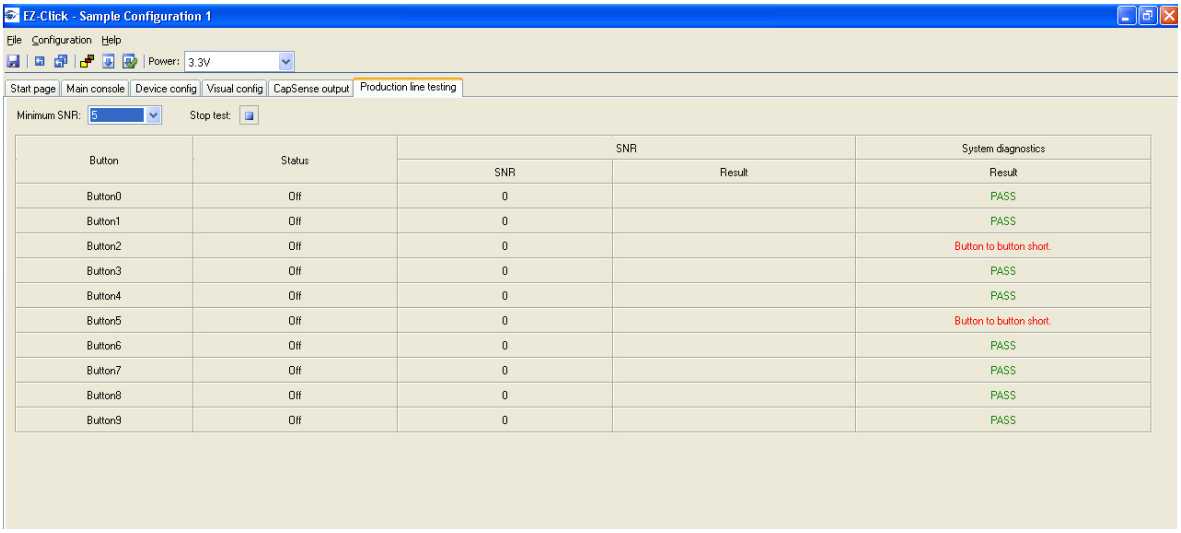

3.2.11.4 *Test System Diagnostics - CapSense Button to Vdd Short*

Follow these steps:

1. Touch the power button to turn off the kit.
2. Connect a wire between pin #27 and pin #41 of the 44-pin expansion connector. This shorts button #6 sensor with Vdd.
3. Touch the power button to turn on the kit.

The CapSense controller executes the System Diagnostics routine on power up and detects the sensor to Vdd short. Observe a pulse of 5 ms width on the GPO #6 pin, which is also visible on the corresponding LED. This indicates that button #6 is shorted to Vdd. The CapSense controller disables the button sensors that are shorted to ground. Touch button #6; note that the corresponding LED is not turned on.

Other buttons work normally.

Figure 3-25. Shorting Button #6 (pin #27) to Vdd (pin #41)



To observe the feature in GUI, go to **Production line testing** tab and click on the **Start test** button.

Figure 3-26. System Diagnostics GUI - Shorting Button to Vdd

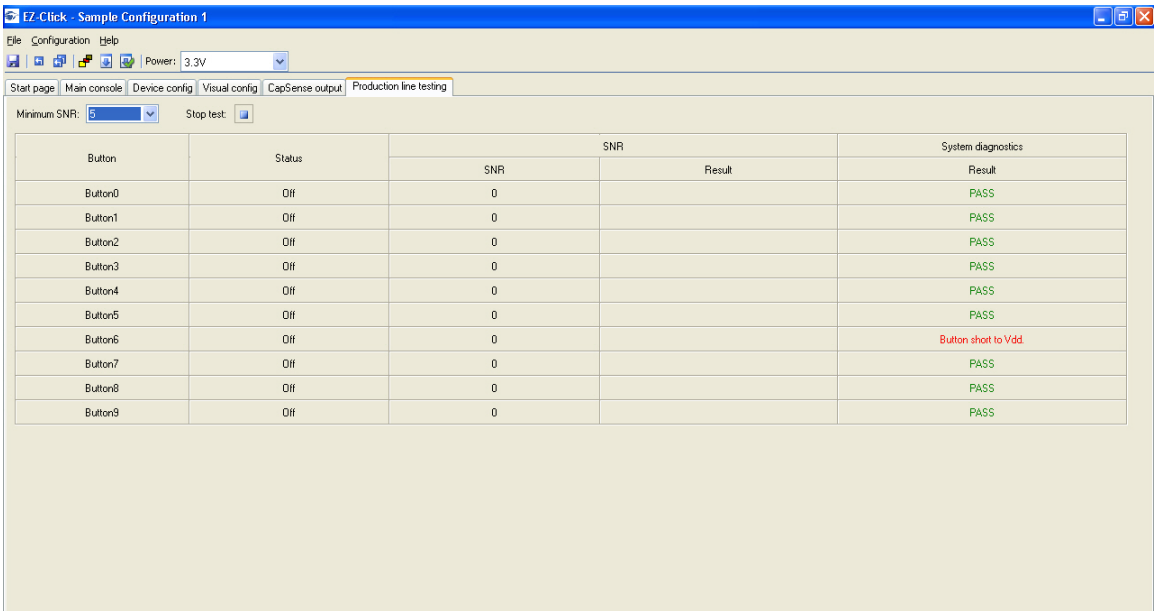

4. Hardware

The CY3280-MBR2 CapSense Express Kit is designed to demonstrate the features of the CY8CMBR2110 register configurable CapSense controller. Figure 3-1 on page 13 illustrates ten CapSense buttons and CapSense-based power and attention buttons. The kit has two status LEDs to demonstrate the direct LED control feature. The CY8CMBR2110 controller supports multiple features, which are discussed in the Kit Operation chapter on page 13.

The CY3280-MBR2 kit has two connectors: a 44-pin expansion connector and a USB-IIC connector. The expansion connector is used to demonstrate the SmartSense Auto-Tuning feature. The USB-IIC connector helps to power and configure the kit using the GUI.

Figure 4-1. CY3280-MBR2 Kit



Figure 4-2 shows the block diagram of the CY3280-MBR kit. The block diagram can be classified into four sections: Power, CY8CMBR2110 functional blocks, I2C to USB, and Connectors (USB-IIC and 44-pin expansion connector). Each section is explained in detail here.

Figure 4-2. Block Diagram

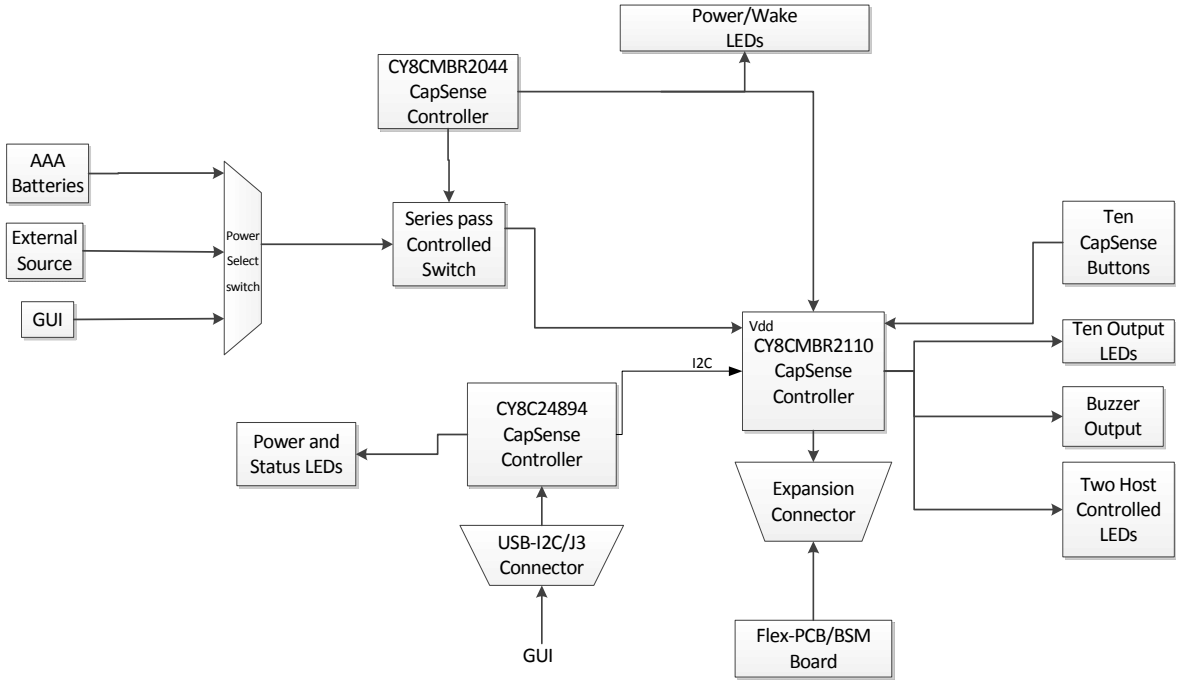

4.1 Power Block

This block consists of the power source, series pass switch, power LED, and the CY8CMBR2044 CapSense controller. The kit supports three power sources.

Table 4-1. Power Source

No.	Power Source	Voltage Levels (Volts)	Power Select Switch Position
1	AAA batteries provided with the kit[a]	3.0	BAT
2	GUI when connected to PC via USB-IIC connector[b]	3.3	GUI
3	External source[c]	3.0	EXT

a. An estimated battery life of ~40hrs can be achieved on an AAA pack when all blocks are turned on. An estimated battery life of one year can be achieved on an AAA pack when the unit is in standby/sleep.
b. GUI has four power options - 1.8 V, 2.5 V, 3.3 V, and 5 V; however, it only supports 3.3 V for this kit. The USB status LED glows when the kit is connected to PC. USB power LED indicates that the kit is powered through USB.
c. To power the kit in this mode change the switch position to EXT and connect the external voltage source and ground to the VDD_EXT (pin 43) and GND (pin 40) pins respectively of the 44-pin connector.

The series pass switch, which is controlled by the CY8CMBR2044 CapSense controller is responsible for the power supplied to the CY8CMBR2110 functional block. To power the kit, at least one of the above sources should be active. Touch the CapSense-based **Power** button to see the LED glowing and ensure that the kit is powered.

The kit has various protection circuits driven by the CY8CMBR2044 chip:

- A fuse is present in the power block to limit the external consumption to 200 mA.
- A diode is present at VDD-Ext to limit the input voltage to 6 V.
- ESD protection is enabled for USB lines.

Figure 4-3. Power Supply System Structure Schematic

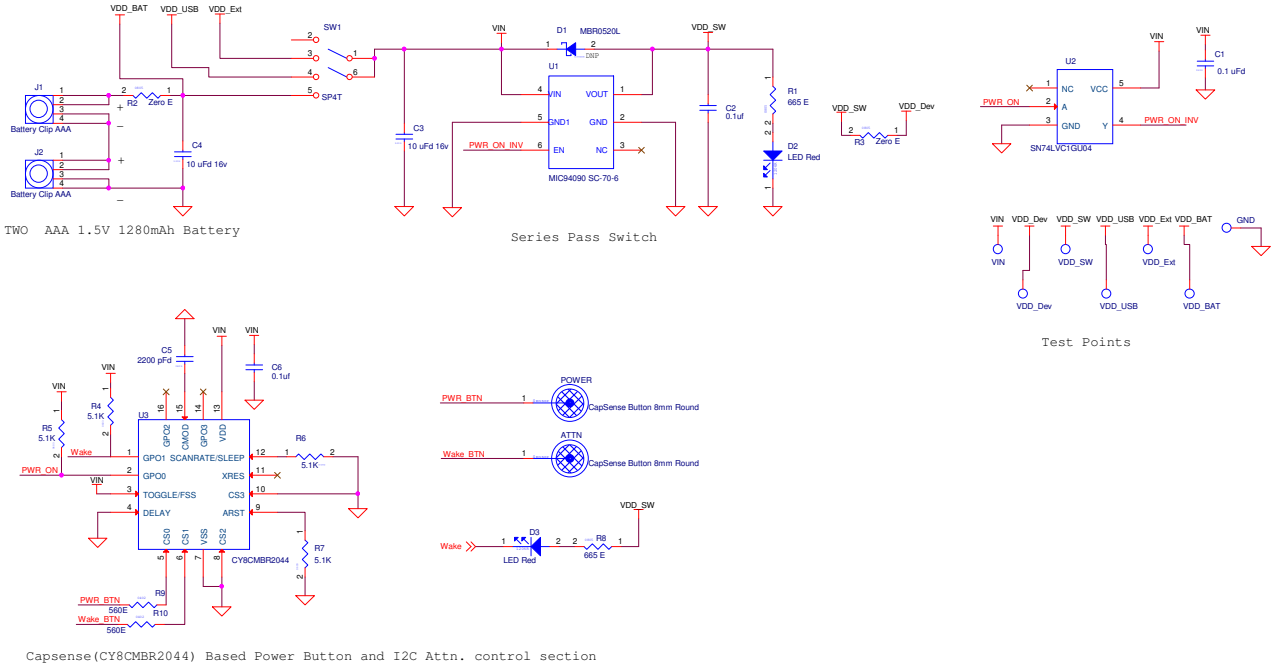

4.2 CY8CMBR2110 Functional Block

This block demonstrates the features mentioned in 3.2 Kit Features on page 16. It consists of:

- CY8CMBR2110 CapSense controller
- 10 CapSense buttons as input
- 10 output LEDs that are directly mapped to CapSense buttons
- A single line buzzer for audio output
- Two host-controlled configurable LEDs
- 22×2 connector to bring out all I/Os and power line of the CY8CMBR2110 chip
- Flex-PCB/BSM board, which can be connected via the 44-pin expansion connector and demonstrates the SmartSense Auto-Tuning feature of the device

4.3 I2C to USB Bridge Block

This block functions as a bridge between the USB (PC) and I2C communication on the CY8CMBR2110 chip. The kit can be configured using this bridge with the help of the GUI. To configure the kit, either use the sample configuration files provided with the kit package or use the GUI via the USB-IIC bridge. In addition to the I2C to USB protocol conversion, the block also controls power to the CY8CMBR2110 chip via the GUI and USB. The block consists of the CY8C24894 chip, which is responsible for the USB-IIC protocol conversion and power control.

4.4 Connector Details

4.4.1 USB-IIC Connector

This kit is configurable through the IIC interface. The USB-IIC connector enables the kit to connect to the PC via the USB cable provided with the kit. This connector serves two main purposes:

- Enables powering the kit from the GUI
- Enables configuring the kit by connecting to the GUI via the USB-IIC header

4.4.2 Expansion Connector

Table 4-2 shows various signals connected to the 44-pin expansion connector. The CS inputs (CS0-CS9) and GPOs linked to each CapSense button are brought to the 44-pin expansion connector. This is used to verify SmartSense Auto-Tuning by connecting the Flex-PCB, BSM, or any other connecting board. The kit can be powered from an external power supply using the VDD and GND signals available in the connector. The kit also has output lines for host control and buzzer. The IIC clock and data lines from the CY8CMBR2110 chip are also brought to this connector.

Table 4-2. 44-Pin Expansion Connector

Pin	Connected to	Pin	Connected to
P1-1	CS8	P1-23	Wake
P1-2	GPO8	P1-24	GPO 1
P1-3	CS5	P1-25	GND
P1-4	XRES	P1-26	GND
P1-5	GPO5	P1-27	CS6
P1-6	GND	P1-28	GPO6
P1-7	GPO5	P1-29	GPO3
P1-8	GPO2	P1-30	CS3
P1-9	CS2	P1-31	GPO3
P1-10	CS9	P1-32	NC
P1-11	GPO9	P1-33	CS0
P1-12	GPO7	P1-34	GND
P1-13	CS7	P1-35	GND
P1-14	CS4	P1-36	GND
P1-15	GND	P1-37	I2C SDA
P1-16	GND	P1-38	I2C SCL
P1-17	CS1	P1-39	GND
P1-18	Host Cntl 0	P1-40	GND
P1-19	Host Cntl 1	P1-41	VDD Dev
P1-20	GPO4	P1-42	NC
P1-21	Buzzer Out 0	P1-43	VDD Ext
P1-22	Buzzer Out 1	P1-44	NC

Note: There are two pins assigned to each of GPO3 and GPO5. This is done to make expansion connector compatible to CY3280 Universal CapSense Module Boards.

5. Sample Configurations

This section discusses the high-level design process to open, build, configure, and run sample configurations using the CY3280-MBR2 CapSense Express Kit.

There are three Sample configurations provided with this kit. Each sample configuration file has different configuration settings demonstrating various kit features. By default, the kit is configured with Sample Configuration 1.

To use the Sample Configuration files, EZ-Click customizer tool is required. The installation details for EZ-Click customizer tool is explained in Getting Started chapter on page 9.

5.1 Demonstration of Features using Sample Configuration Files

Follow the steps to run the configuration files and test the features.

5.1.1 Loading Configuration File 1

1. Connect the CY3280-MBR2 kit to the PC via the USB port using the USB cable and move the switch position to GUI. Ensure USB Status LED glows.
2. Open the EZ-Click customizer tool from the default location: **Start > All Programs > Cypress > EZ-Click** <version> **> EZ-Click**.
3. Click on **Load Project** under **File** menu. Figure 5-1 shows the default location of **Load Project** action.

Figure 5-1. Load Project

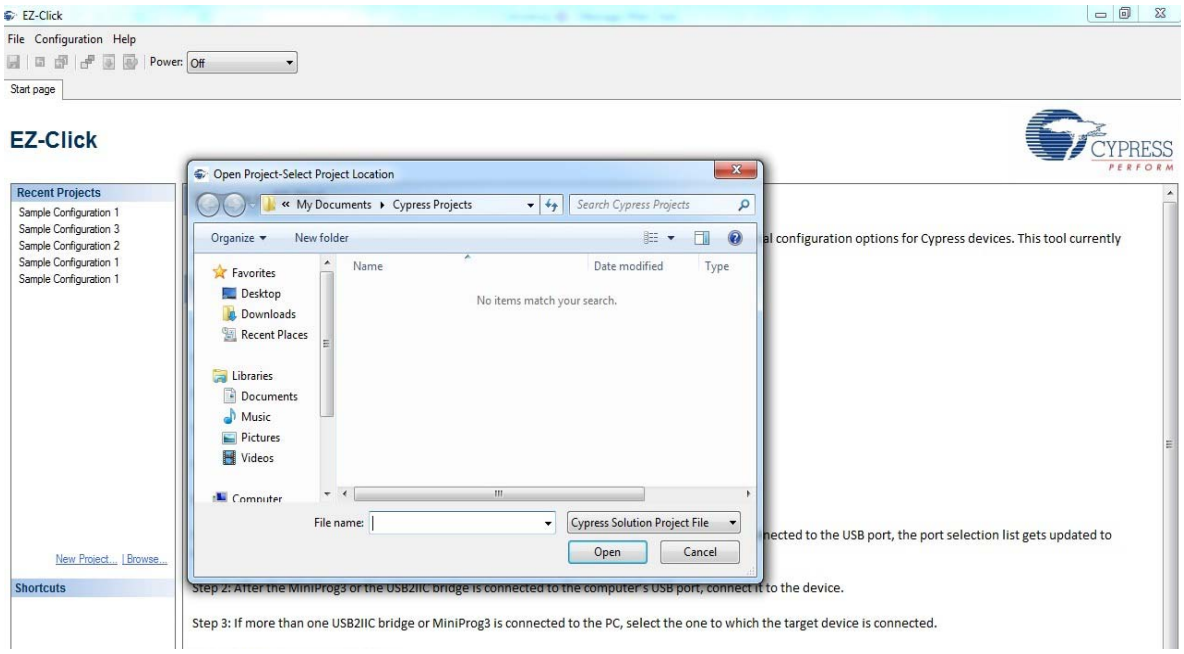

4. Navigate to the project directory `<Install_Directory>:\Program Files\Cypress\CY3280-MBR2\<version>\Sample Configurations\Sample Configuration 1` in the **Open Project - Select Project Location** window.
5. Double-click on the **Sample Configuration 1** file to open.

Figure 5-2. Open Configuration1 File

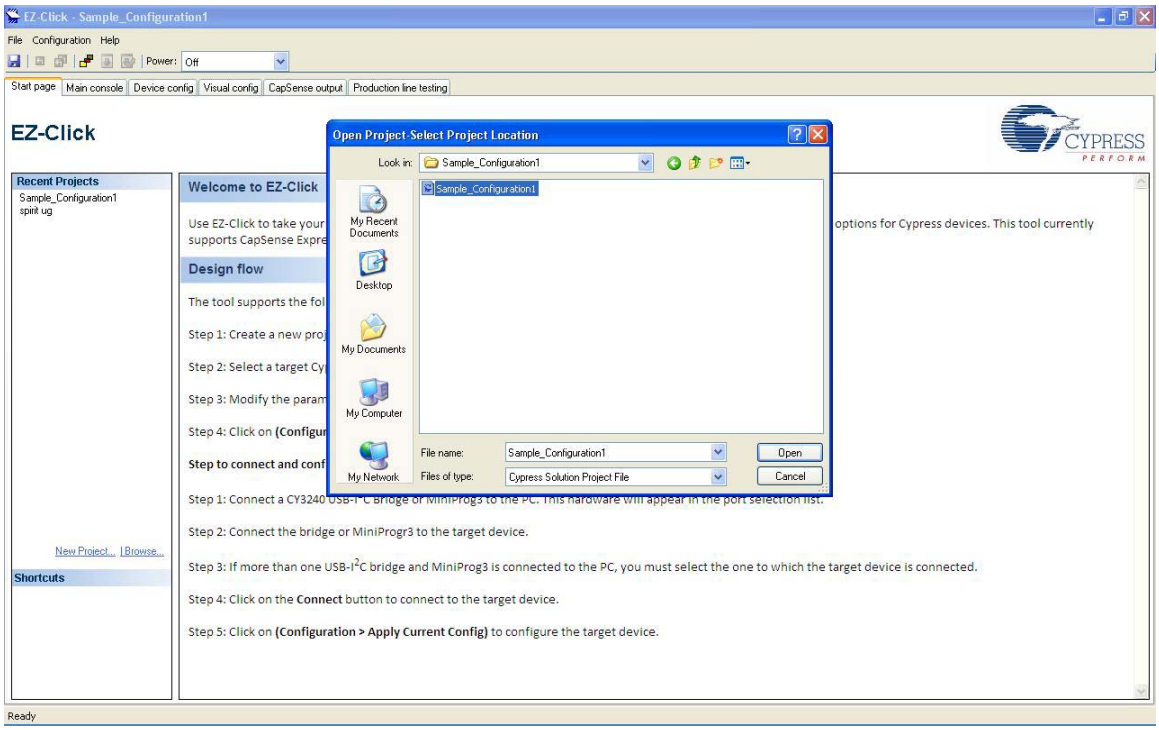

6. Connect the kit to the EZ-Click tool using the following steps.
   a. Click on the **Connect** button on the **Main Console** tab of the EZ-Click customizer tool. The EZ-Click will throw an error as shown. Click **OK** on the pop-up window. Ensure USB Power LED glows.

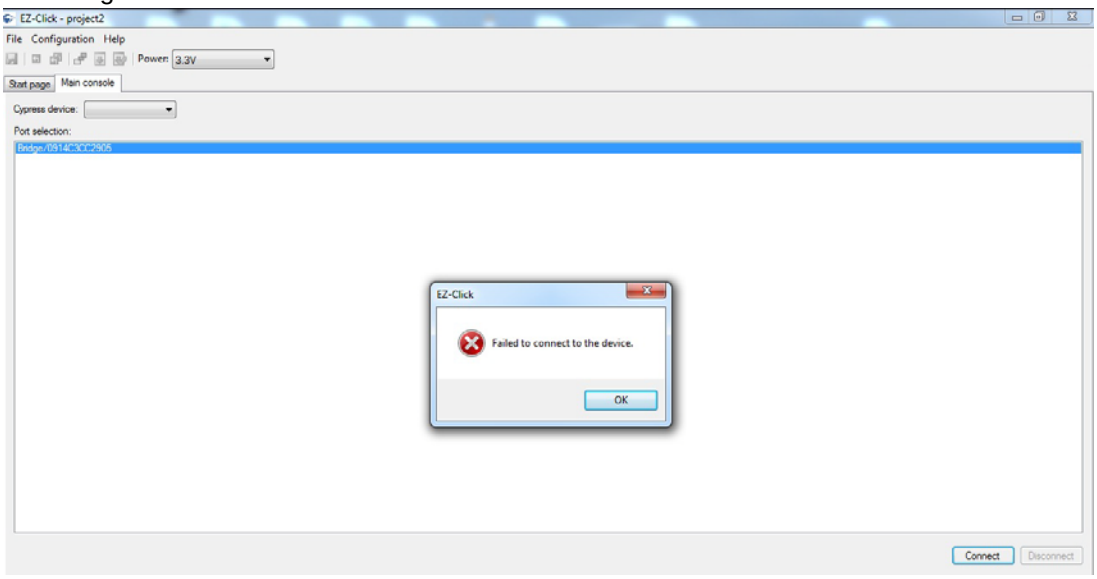

b. Touch the **Power** button to turn **ON** the kit. Ensure Power button, LED1, LED2 and Attention button glows.

c. Click the **Connect** button on the **Main Console tab** of the EZ-Click customizer tool. Ensure you see the device connected in the status window of the Main Console tab.

7. Click on **Apply Current Config** under **Configuration** menu to apply the configuration to the kit.

Figure 5-3. Apply Current Configuration



8. Touch the **Power** button to power the kit.
9. Verify the following features:
   - **LED ON time (1.5 sec):** Touch any CapSense button; the respective LED turns on. When the finger is released, the LED turns off after 1.5 seconds.
   - **Button auto reset (5 sec):** Touch any CapSense button; the respective LED turns on. Do not release the finger; the button will go off automatically after 5 seconds.
   - **Automatic threshold:** This feature automatically keeps an optimum finger threshold value for all the buttons.

5.1.2 Loading Configuration File 2

The GUI images for the following steps are similar to 5.1.1 Loading Configuration File 1 on page 35:

1. Steps 1 to 3 remains the same as mentioned 5.1.1.
2. Navigate to the project directory `<Install_Directory>:\Program Files\Cypress\CY3280-MBR2\<version>\Sample Configurations\Sample Configuration 2` in the **Open Project - Select Project Location** window.
3. Double-click on the **Sample Configuration 2** file to open.
4. Follow the steps 4 to 6 mentioned in section 5.1.1 to continue.
5. Verify the following features:
   - **Buzzer:** Touch any button; the respective LED turns ON along with an audio feedback.
   - **Power-on LED effects:** Observe LED effects on all the buttons upon power up.
   - **Button controlled LED effects:** Observe LED effects on touching any CapSense button.
   - **Automatic threshold:** This feature automatically keeps an optimum finger threshold value for all the buttons.
   - **Debounce control on Button 1:** Observe that button 1 is activated only after you touch the button for approximately 1 second.

5.1.3 Loading Configuration File 3

The GUI images for the following steps are similar to 5.1.1 Loading Configuration File 1 on page 35:

1. Steps 1 to 3 remains the same as mentioned 5.1.1.
2. Navigate to the project directory `<Install_Directory>:\Program Files\Cypress\CY3280-MBR2\<version>\Sample Configurations\Sample Configuration 3` in the **Open Project - Select Project Location** window.
3. Double-click on the **Sample Configuration 3** file to open.
4. Follow the steps 4 to 6 mentioned in section 5.1.1 to continue.
5. Verify the following features:
   - **Button auto reset (5 sec):** Touch any CapSense button; the respective LED turns on. Do not release the finger; the button will go off automatically after 5 seconds.
   - **Power-on LED effects:** Observe LED effects on all the buttons upon power up.
   - **Toggle + Button controlled LED effects:** Touch any of the buttons 1, 2, 3, 4, 5, 6; the corresponding LED lights up showing a ramp in LED brightness. The button will remain lit till the next touch. The LED brightness ramps down to 0 on the second touch.
   - **FSS + Button LED effects:** Touch any of the buttons 7, 8, 9, 10; the corresponding LED lights up showing LED effects. Keep the finger on the button and touch any of these buttons; the second button does not glow. Remove the finger from the first button and then touch any of these button; the button glows displaying LED effects.

Note: You can use Sample configurations 1 and 2 with the Flex-PCB in the same way as explained in the SmartSense auto-tuning feature in Kit Operation chapter on page 13. It is not recommended to use Sample configuration 3 for Flex-PCB.

A. Appendix

A.1 Schematics

A.1.1 CY3280-MBR2 Board

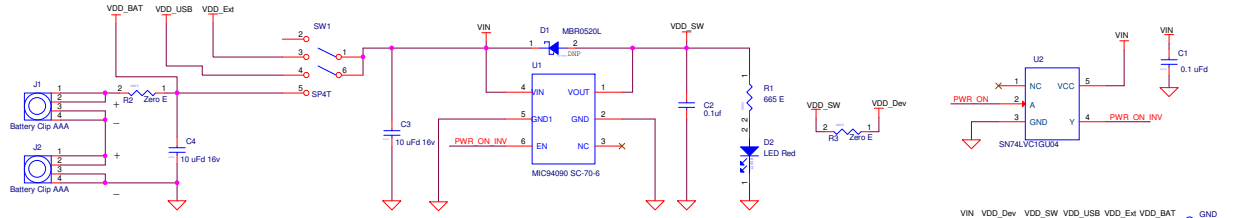

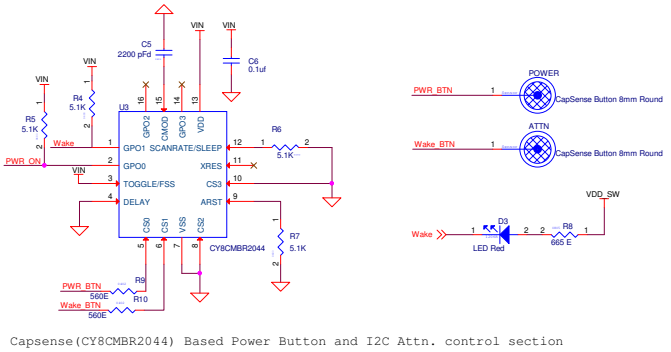

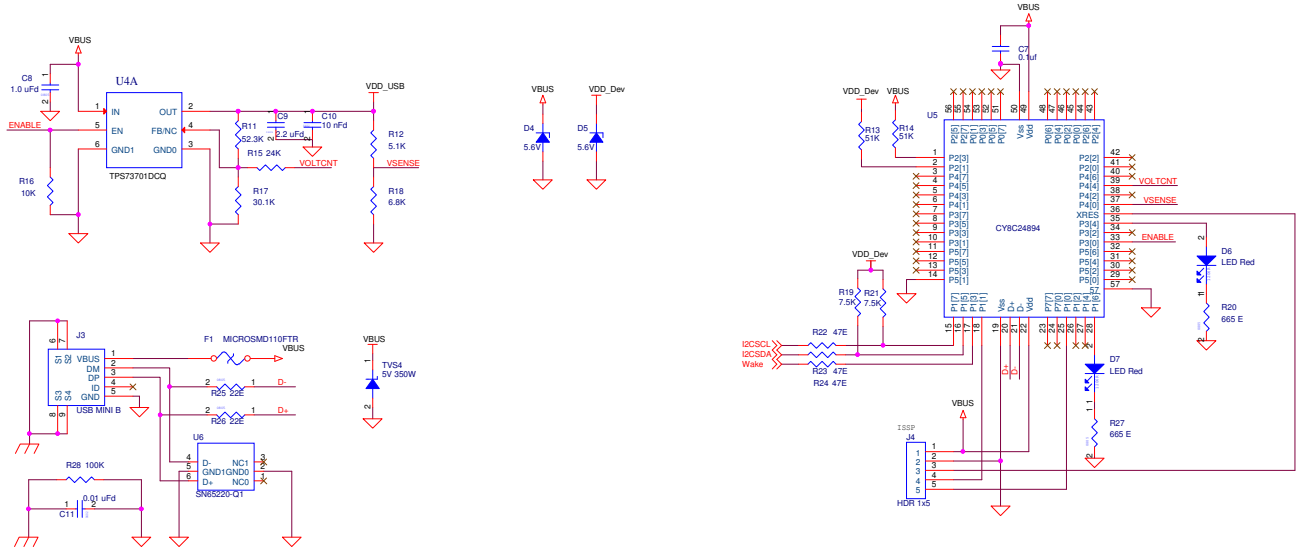

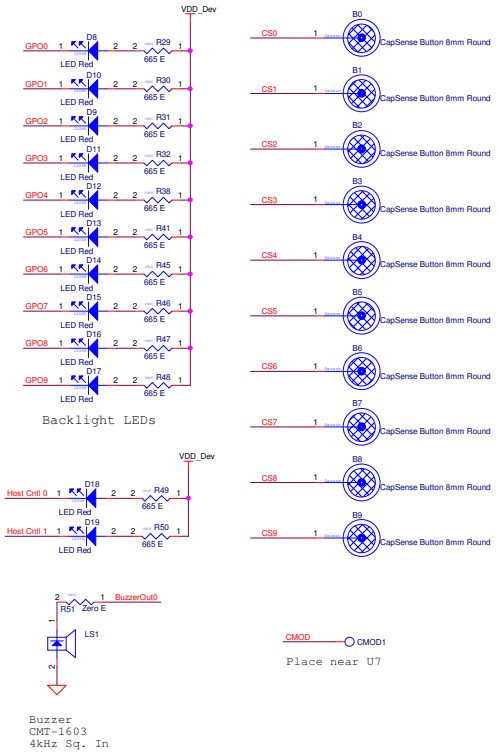
VDD_Dev
GPO0
GPO1
GPO2
GPO3
GPO4
GPO5
GPO6
GPO7
GPO8
GPO9
D8
D10
D9
D11
D12
D13
D14
D15
D16
D17
LED Red
R29
R30
R31
R32
R38
R41
R45
R46
R47
R48
665 E
Backlight LEDs
VDD_Dev
Host Cntl 0
Host Cntl 1
D18
D19
R49
R50
LED Red
BuzzerOut0
R51
Zero E
LS1
Buzzer
CMT-1603
4kHz Sq. In
CS0
CS1
CS2
CS3
CS4
CS5
CS6
CS7
CS8
CS9
B0
B1
B2
B3
B4
B5
B6
B7
B8
B9
CapSense Button 8mm Round
CMOD
CMOD1
Place near U7

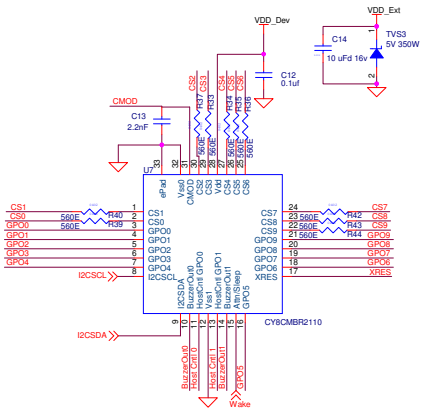
VDD_Dev
VDD_Ext
C14
10 uFd 16v
TVS3
5V 350W
C12
0.1uf
CMOD
C13
2.2nF
U7
CS1
CS0
GPO0
GPO1
GPO2
GPO3
GPO4
I2CSCL
I2CSDA
CS7
CS8
CS9
GPO9
GPO8
GPO7
GPO6
XRES
CY8CMBR2110
BuzzerOut0
Host Cntl 0
Host Cntl 1
BuzzerOut1
GPO5
Wake

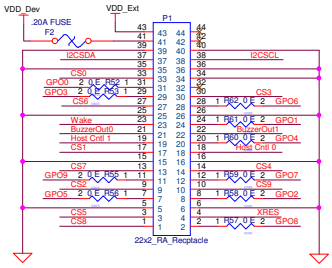
VDD_Dev
VDD_Ext
.20A FUSE
F2
P1
I2CSDA
I2CSCL
CS0
GPO0
GPO3
CS6
Wake
BuzzerOut0
Host Cntl 1
CS1
CS7
GPO9
CS2
GPO5
CS5
CS8
CS3
GPO6
GPO1
BuzzerOut1
GPO4
Host Cntl 0
CS4
GPO7
GPO2
XRES
GPO8
22x2_RA_Recptacle

A.1.2 Flex-PCB

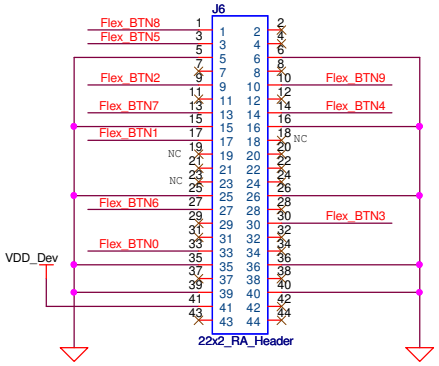
J6
Flex_BTN8
Flex_BTN5
Flex_BTN2
Flex_BTN7
Flex_BTN1
Flex_BTN6
Flex_BTN0
VDD_Dev
Flex_BTN9
Flex_BTN4
Flex_BTN3
NC
22x2_RA_Header

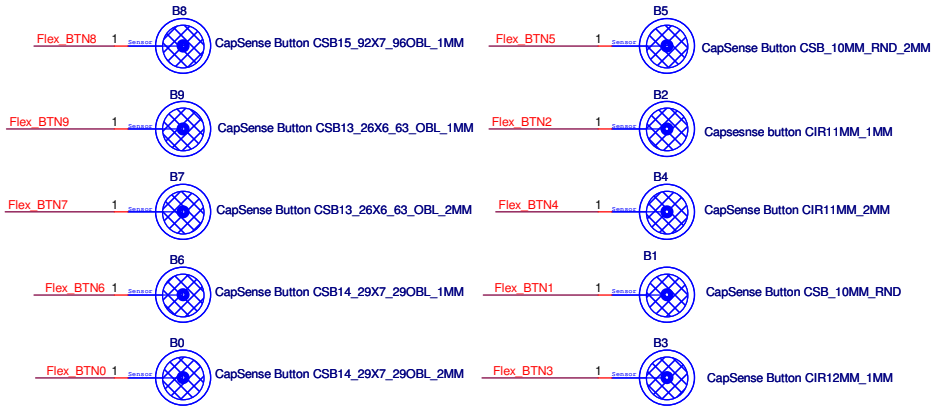
B8
Flex_BTN8
CapSense Button CSB15_92X7_96OBL_1MM
B5
Flex_BTN5
CapSense Button CSB_10MM_RND_2MM
B9
Flex_BTN9
CapSense Button CSB13_26X6_63_OBL_1MM
B2
Flex_BTN2
Capsesnse button CIR11MM_1MM
B7
Flex_BTN7
CapSense Button CSB13_26X6_63_OBL_2MM
B4
Flex_BTN4
CapSense Button CIR11MM_2MM
B6
Flex_BTN6
CapSense Button CSB14_29X7_29OBL_1MM
B1
Flex_BTN1
CapSense Button CSB_10MM_RND
B0
Flex_BTN0
CapSense Button CSB14_29X7_29OBL_2MM
B3
Flex_BTN3
CapSense Button CIR12MM_1MM

A.2 Board Layouts

A.2.1 CY3280-MBR2 Board Primary Side

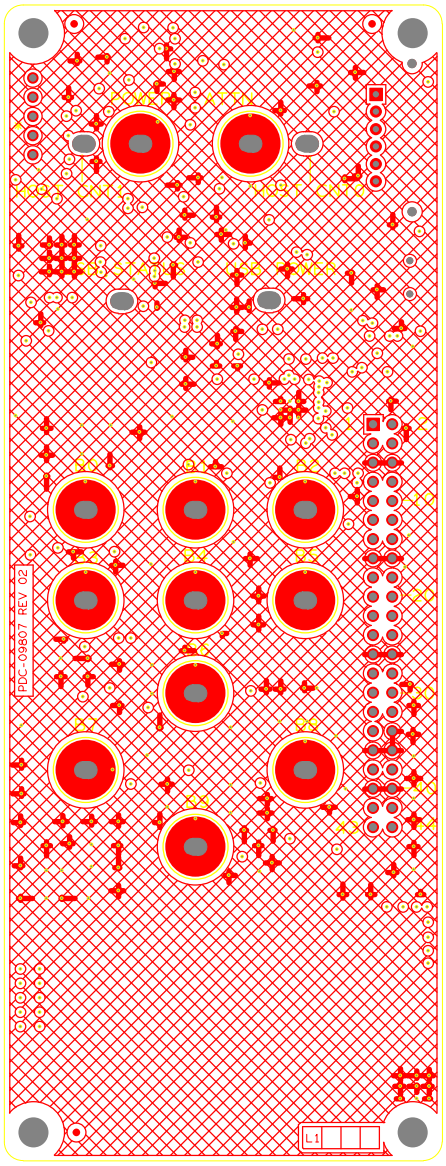

A.2.2 CY3280-MBR2 Board Secondary Side

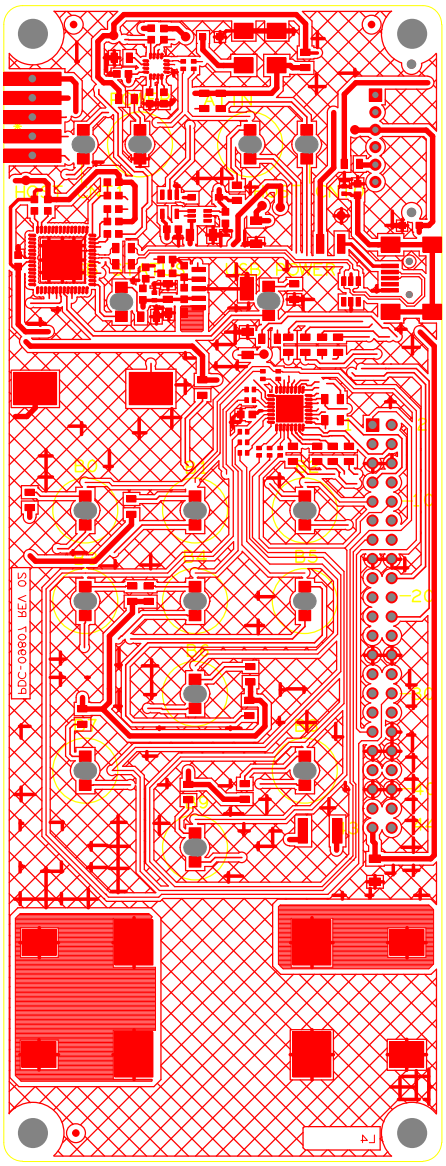

A.2.3 Power Layer

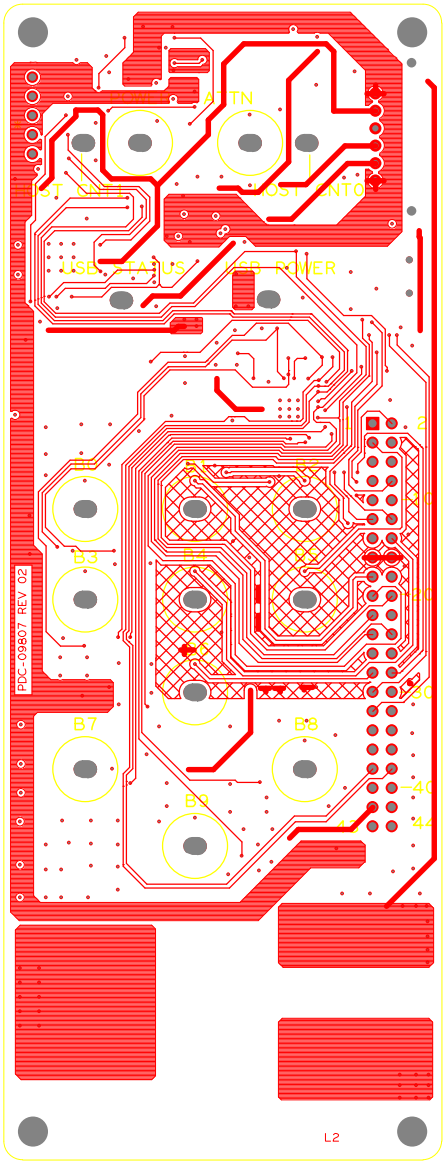

A.2.4 Ground Layer

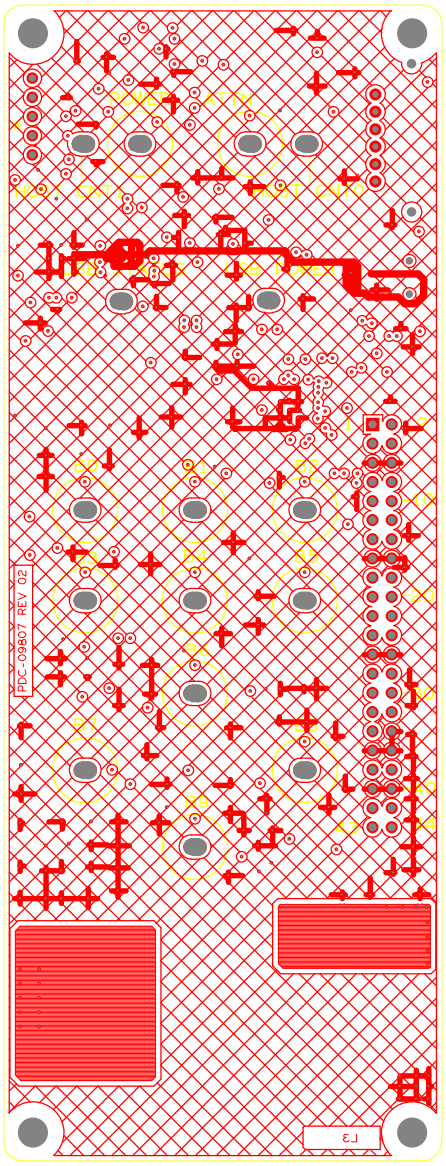

A.2.5 Flex-PCB Primary Side

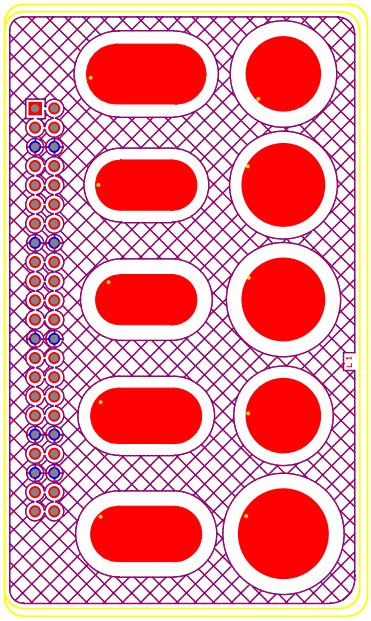

A.2.6 Flex-PCB Secondary Side

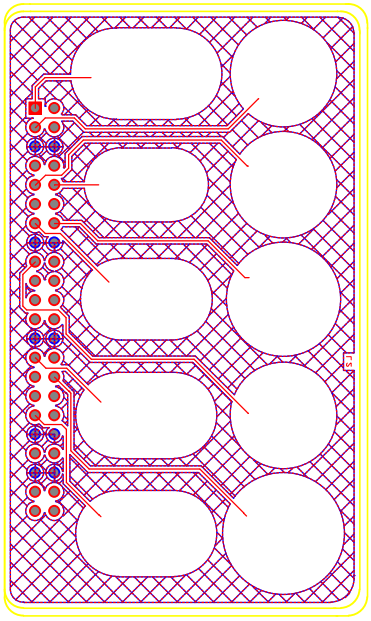

A.3 Bill of Materials (BOM)

Item	Qty	Reference	Description	Manufacturer	Mfr Part Number
1	5	C2,C1,C6,C12,C7	CAP .10UF 10V CERAMIC X7R 0603	Kemet	C0603C104K8RACTU
2	2	C3,C4	CAP CERAMIC 10.0UF 16V X5R 1206	Kemet	C1206C106K4PACTU
3	1	C5	CAP CER 2200PF 50V 5% C0G 0805	Murata Electronics North America	GRM2165C1H222JA01D
4	1	C8	CAP 1.0UF 16V CERAMIC Y5V 0805	Murata Electronics North America	GRM219F51C105ZA01D
5	1	C9	CAP CER 2.2UF 10V 10% X7R 0805	Murata Electronics North America	GRM21BR71A225KA01L
6	1	C10,C11	CAP 10000PF 16V CERAMIC X7R 0402	Yageo America	CC0402KRX7R7BB103
7	1	C13	CAP CERM 2200PF 1% 50V NP0 1206	AVX Corporation	12065A222FAT2A
8	16	D2,D3,D6,D7, D8,D9,D10,D11, D12,D13,D14, D15,D16,D17, D18,D19	LED RED CLEAR 1206 REAR MNT SMD	Stanley Electric Co	BR1111R-TR
9	2	D4,D5	TVS 5.0 VOLT 600 WATT BI-DIR SMB	Littelfuse Inc	SMBJ5.0CA
10	1	TVS3	IC TVS UNI-DIR 5V 350W	Semtech	SD05.TCT
11	1	F1	POLYSWITCH 1.10A RESET FUSE SMD	TE Connectivity	MICROSMD110F-2
12	1	F2	POLYSWITCH .20A RESET FUSE SMD	TE Connectivity	MINISMDC020F-2
13	2	J1,J2	CLIP BATTERY AAA/N .375X.460" SS	Keystone Electronics	55TR
14	1	J3	CONN USB MINI B SMT RIGHT ANGLE	TYCO	1734035-2
15	1	LS1	BUZZER AUDIO PIEZO 25V SMD	CUI Inc	CMT-1603
16	1	P1	CONN FMALE 44POS DL .1" R/A GOLD	Sullins Electronics Corp.	PPPC222LJBN-RC
17	3	R2,R3,R51	RES CHIP 0.0 OHM 1/10 1/8W 5% 0805 SMD	Panasonic - ECG	ERJ-6GEY0R00V
18	3	R4,R5,R7	RES 5.1K OHM 1/16 1/10W 1% 0603 SMD	Yageo Corporation	RC0603FR-075K1L
19	1	R6	RES 0.0 OHM 1/10W 0603 SMD	Yageo Corporation	RC0603JR-070RL
20	12	R9,R10,R33,R34,R35,R36,R37, R39,R40,R42, R43, R44	RES 560 OHM 1/16W 1% 0402 SMD	Vishay/Dale	CRCW0402560RFKED
21	1	R11	RES 52.3K OHM 1/10W 1% 0603 SMD	Yageo	RC0603FR-0752K3L
22	1	R12	RES 5.1K OHM 1/10W 5% 0603 SMD	Yageo	RC0603JR-075K1L
23	1	R14, R13	RES 51K OHM 1/10W 5% 0603 SMD	Yageo	RC0603JR-0751KL
24	1	R15	RES 24.0K OHM 1/10W 1% 0603 SMD	Yageo	RC0603FR-0724KL
25	1	R16	RES 10K OHM 1/10W 5% 0603 SMD	Yageo	RC0603JR-0710KL

Item	Qty	Reference	Description	Manufacturer	Mfr Part Number
26	1	R17	RES 30.1K OHM 1/10W 1% 0603 SMD	Yageo	RC0603FR-0730K1L
27	1	R18	RES 6.8K OHM 1/10W 5% 0603 SMD	Yageo	RC0603JR-076K8L
28	2	R19,R21	RES 7.5K OHM 1/10W 5% 0603 SMD	Yageo	RC0603JR-077K5L
29	3	R22,R23,R24	RES 47 OHM 1/10W 5% 0603 SMD	Yageo	RC0603JR-0747RL
30	2	R25,R26	RES 22 OHM 1/8W 5% 0805 SMD	Panasonic - ECG	ERJ-6GEYJ220V
31	1	R28	RES 100K OHM 1/10W 5% 0603 SMD	Rohm	MCR03EZPJ104
32	1	SW1	SWITCH MINI SLIDE SP4T	APEM Components, LLC	SLB1470R
33	1	U1	IC LOAD SW HGH SIDE 1.2A SC70-6	Micrel Inc	MIC94090YC6 TR
34	1	U2	IC SINGLE INVERTER GATE SOT-23-5	Texas Instruments	SN74LVC1GU04DBVR
35	1	U3	IC MCU CAPSENSE QFN16	Cypress Semiconductor	CY8CMBR2044-24LKXI
36	1	U4A	IC LDO REG 1A SOT223-6	Texas Instruments	TPS73701DCQ
37	1	U5	IC PSOC 16KB FLASH 56QFN	Cypress Semiconductor	CY8C24894-24LFXA
38	1	U6	IC SINGLE USB PORT TVS SOT-23-6	Texas Instruments	SN65220DBVR
39	1	U7	IC MCU CAPSENSE QFN32	Cypress Semiconductor	CY8CMBR2110-24LQXI
40	16	R1,R8,R20,R27, R29,R30,R31, R32,R38,R41, R45,R46,R47, R48,R49,R50	RES 665 OHM 1/8W 1% 0805 SMD	Panasonic-ECG	ERJ-6ENF6650V
41	1	PCB	FLEXIBLE PRINTED CIRCUIT BOARD	Open Source	PDC-09807 Rev03
42	1	D1	DIODE SCHOTTKY 0.5A 20V SOD-123	Fairchild Semiconductor	MBR0520L
43	10	R52,R53,R55, R56,R57,R58, R59,R60,R61, R62	RES CHIP 0.0 OHM 1/10 1/8W 5% 0805 SMD	Panasonic - ECG	ERJ-6GEY0R00V
44	1	J4	CONN HEADER 5POS 0.1 VERT KEYED	Molex	22-23-2051
45	1	D1	DIODE SCHOTTKY 0.5A 20V SOD-123	Fairchild Semiconductor	MBR0520L
46	10	R52,R53,R55, R56,R57,R58, R59,R60,R61, R62	RES CHIP 0.0 OHM 1/10 1/8W 5% 0805 SMD	Panasonic - ECG	ERJ-6GEY0R00V
47	1	J4	CONN HEADER 5POS 0.1 VERT KEYED	Molex	22-23-2051
48	1	J6	CONN HEADER .100 DUAL R/A 44POS	Sullins Electronics Corp.	PBC22DBAN