CY3267 POWERPSoC® LIGHTING

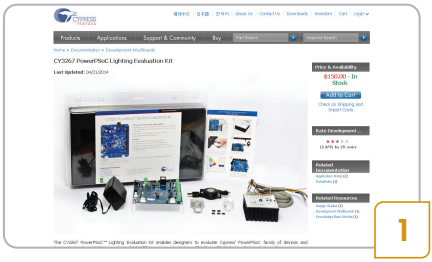

1

- Download and Install the latest kit software and examples from www.cypress.com/go/CY3267

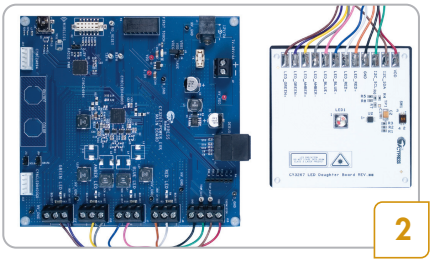

2

- Connect the CY3267 PowerPSoC® board to the LED daughter board; see the user guide for instructions

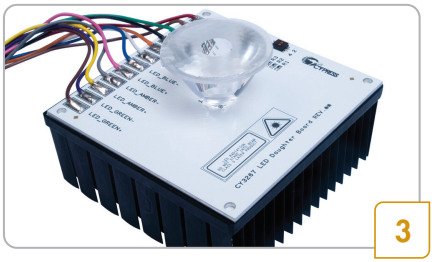

3

- Mount the optical diffuser on the LED daughter board. Connect the power supply to the main board

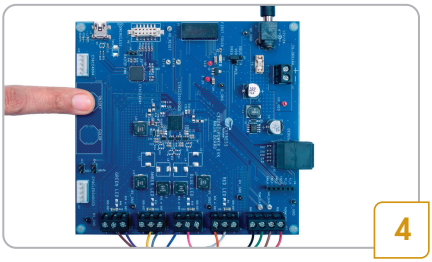

4

- Touch the ON/OFF CapSense® button to toggle the LEDs. Touch the COLOR CapSense button to cycle through colors

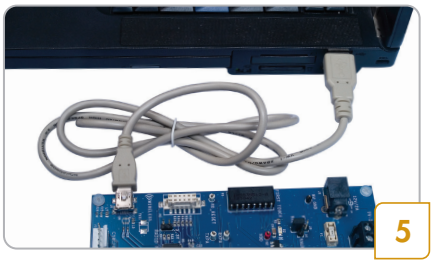

5

- Connect the main board to the PC using the USB cable provided with the kit

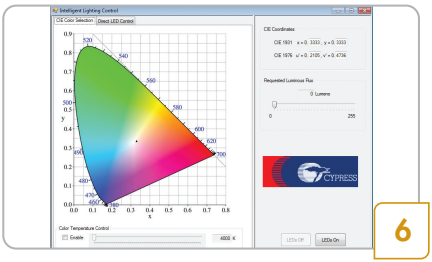

6

- Use the GUI installed on the PC to control LEDs. See the user guide for more information about the GUI

CY3267 POWERPSoC® LIGHTING

CY3267 PowerPSoC Lighting Evaluation Kit Details

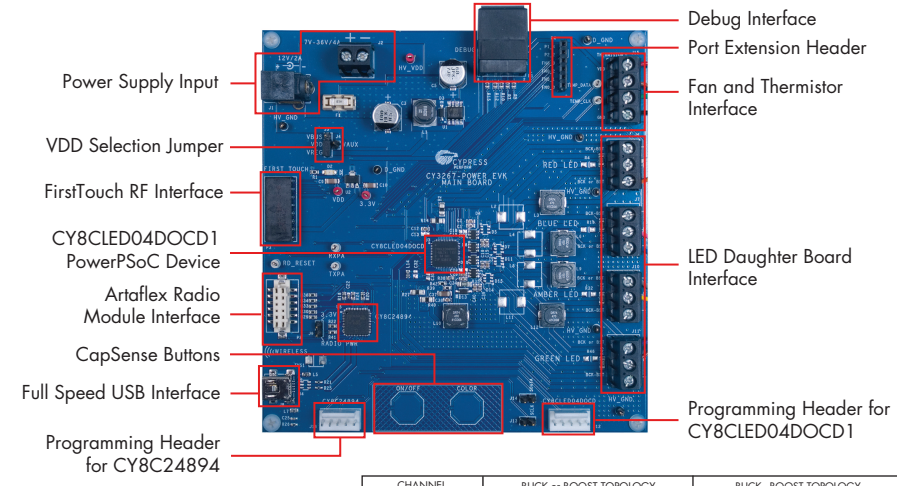

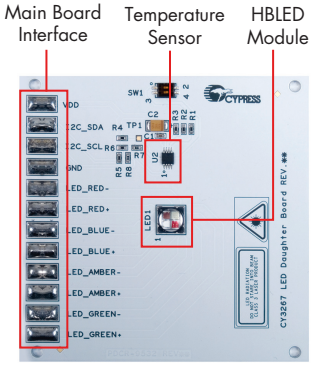

CHANNEL	BUCK or BOOST TOPOLOGY	BUCK - BOOST TOPOLOGY
RED (J6)	J6: BCK-BST – ; + ← LED_RED+ (WHITE); BCK or BST ← LED_RED- (ORANGE)	J6: BCK-BST ← LED_RED- (ORANGE); + ← LED_RED+ (WHITE); BCK or BST –
BLUE (J7)	J7: BCK-BST – ; + ← LED_BLUE+ (PINK); BCK or BST ← LED_BLUE- (BLUE)	J7: BCK-BST ← LED_BLUE- (BLUE); + ← LED_BLUE+ (PINK); BCK or BST –
AMBER (J10)	J10: BCK or BST ← LED_AMBER- (GRAY); + ← LED_AMBER+ (YELLOW); BCK-BST –	J10: BCK or BST –; + ← LED_AMBER+ (YELLOW); BCK-BST ← LED_AMBER- (GRAY)
GREEN (J11)	J11: BCK or BST ← LED_GREEN- (PURPLE); + ← LED_GREEN+ (BROWN); BCK-BST –	J11: BCK or BST –; + ← LED_GREEN+ (BROWN); BCK-BST ← LED_GREEN- (PURPLE)

Refer to this image to connect the LED Daughter Card Interface on the main board and the Main Board Interface on the daughter board. Note that the Buck or Boost Topology is required for the onboard firmware to work properly

For the latest information about this kit, visit www.cypress.com/go/CY3267

© 2011 - 2014 Cypress Semiconductor Corporation. All rights reserved.
All trademarks or registered trademarks referenced herein are the properties of their respective owners.
Doc.# 001-50556 Rev.*F