CY3267

PowerPSoC® Lighting Evaluation Kit User Guide

Document No. 001-49266 Rev. *I



WARNING: HIGH-BRIGHTNESS LEDs CAN CAUSE PERMANENT DAMAGE!

Do not look at the HBLEDs if they are not covered by the optical diffuser. The HBLEDs illuminate at a very high intensity and can cause permanent eye damage. Use a thick white sheet of paper as a diffuser if there is no optical diffuser available.

WARNING: Generally all lab work in power electronics must be done with extreme care. Caution must be exercised when using power supplies and power-related equipment.

Cypress Semiconductor
198 Champion Court
San Jose, CA 95134-1709
www.cypress.com

Copyrights

© Cypress Semiconductor Corporation, 2009-2017. This document is the property of Cypress Semiconductor Corporation and its subsidiaries, including Spansion LLC ("Cypress"). This document, including any software or firmware included or referenced in this document ("Software"), is owned by Cypress under the intellectual property laws and treaties of the United States and other countries worldwide. Cypress reserves all rights under such laws and treaties and does not, except as specifically stated in this paragraph, grant any license under its patents, copyrights, trademarks, or other intellectual property rights. If the Software is not accompanied by a license agreement and you do not otherwise have a written agreement with Cypress governing the use of the Software, then Cypress hereby grants you a personal, non-exclusive, nontransferable license (without the right to sublicense) (1) under its copyright rights in the Software (a) for Software provided in source code form, to modify and reproduce the Software solely for use with Cypress hardware products, only internally within your organization, and (b) to distribute the Software in binary code form externally to end users (either directly or indirectly through resellers and distributors), solely for use on Cypress hardware product units, and (2) under those claims of Cypress's patents that are infringed by the Software (as provided by Cypress, unmodified) to make, use, distribute, and import the Software solely for use with Cypress hardware products. Any other use, reproduction, modification, translation, or compilation of the Software is prohibited.

TO THE EXTENT PERMITTED BY APPLICABLE LAW, CYPRESS MAKES NO WARRANTY OF ANY KIND, EXPRESS OR IMPLIED, WITH REGARD TO THIS DOCUMENT OR ANY SOFTWARE OR ACCOMPANYING HARDWARE, INCLUDING, BUT NOT LIMITED TO, THE IMPLIED WARRANTIES OF MERCHANTABILITY AND FITNESS FOR A PARTICULAR PURPOSE. To the extent permitted by applicable law, Cypress reserves the right to make changes to this document without further notice. Cypress does not assume any liability arising out of the application or use of any product or circuit described in this document. Any information provided in this document, including any sample design information or programming code, is provided only for reference purposes. It is the responsibility of the user of this document to properly design, program, and test the functionality and safety of any application made of this information and any resulting product. Cypress products are not designed, intended, or authorized for use as critical components in systems designed or intended for the operation of weapons, weapons systems, nuclear installations, life-support devices or systems, other medical devices or systems (including resuscitation equipment and surgical implants), pollution control or hazardous substances management, or other uses where the failure of the device or system could cause personal injury, death, or property damage ("Unintended Uses"). A critical component is any component of a device or system whose failure to perform can be reasonably expected to cause the failure of the device or system, or to affect its safety or effectiveness. Cypress is not liable, in whole or in part, and you shall and hereby do release Cypress from any claim, damage, or other liability arising from or related to all Unintended Uses of Cypress products. You shall indemnify and hold Cypress harmless from and against all claims, costs, damages, and other liabilities, including claims for personal injury or death, arising from or related to any Unintended Uses of Cypress products.

Cypress, the Cypress logo, Spansion, the Spansion logo, and combinations thereof, WICED, PSoC, CapSense, EZ-USB, F-RAM, and Traveo are trademarks or registered trademarks of Cypress in the United States and other countries. For a more complete list of Cypress trademarks, visit cypress.com. Other names and brands may be claimed as property of their respective owners.

Contents

1. Introduction **5**

1.1 Kit Contents 5
1.2 Additional Learning Resources 6
1.3 Document History 7
1.4 Documentation Conventions 7

2. Getting Started **8**

2.1 Install Kit Software 8
2.2 PSoC Designer 10
2.3 PSoC Programmer 12
2.4 Install Intelligent Lighting Control GUI 13
2.5 Install Hardware 14
2.5.1 Board Wiring Instructions 14

3. Kit Operation **17**

3.1 Introduction 17
3.2 Theory of Operation 17
3.3 Programming the PowerPSoC Device 18
3.3.1 Programming using PSoC Designer 18

4. Hardware **20**

4.1 CY3267 Power EVK Main Board 20
4.1.1 Power Supply 22
4.1.2 PowerPSoC 25
4.1.3 Programming Interface 29
4.1.4 Debug Interface 30
4.1.5 Connectors and Ports 30
4.1.6 LED Board Interface 31
4.1.7 FirstTouch RF Interface 31
4.1.8 Artaflex Radio Module Interface 32
4.1.9 Full Speed USB Interface 32
4.1.10 CapSense Buttons 33
4.1.11 Fan and Thermistor Interface 33
4.1.12 CY3267 LED Daughter Board Functional Description 34
4.1.13 HBLED Module 34
4.1.14 CY3267 Power EVK Main Board Interface 35
4.1.15 Temperature Sensor 35

5. Software **36**

5.1 Representing Colors 37
5.2 LED Luminous Flux 40

6. Code Examples **41**

6.1 Code Example: CY3267_PowerPSoC....41
6.1.1 Project Description....41
6.1.2 Hardware Connections....41
6.1.3 Program Flow Diagram....43
6.1.4 Verify Output....43

A. Appendix **44**

A.1 Schematics....44
A.2 Bill of Materials....46
A.3 Safety Precautions....48

1. Introduction

Thank you for your interest in the CY3267 PowerPSoC® Lighting Evaluation Kit (EVK). This kit enables designers to evaluate Cypress's PowerPSoC family of devices and create scalable LED management solutions. PowerPSoC devices feature high-performance power electronics, including 1-A, 2-MHz power FETs, hysteretic controllers, current sense amplifiers, and PrISM™ and pulse-width modulators (PWM) to create a complete solution for LED power management.

The CY3267 PowerPSoC Lighting EVK demonstrates PowerPSoC's ability to drive four LED channels (red, green, blue, and amber) at the desired color and brightness output.

Headers provided on the CY3267 Power EVK main board enable you to expand the system to support external daughter cards with I^2C-capable interfaces. DALI and DMX512 daughter cards are examples of expandable cards that can be used with this board.

Cypress assumes that you have the relevant knowledge of DC-DC power converters for LED applications.

Introduction chapter on page 5 lists the kit contents and document conventions.

Getting Started chapter on page 8 describes how to use the kit and install the associated software.

Kit Operation chapter on page 17 explains the kit operation.

Hardware chapter on page 20 describes the hardware details of the kit.

Software chapter on page 36 describes the Intelligent Lighting Control application GUI.

Code Examples chapter on page 41 discusses the code example associated with the CY3267 PowerPSoC Lighting EVK.

1.1 Kit Contents

The CY3267 PowerPSoC Lighting EVK contains:

- CY3267 Power EVK main board
- CY3267 LED daughter board
- 12-V, 2-A power supply
- Optical diffuser
- Retractable USB cable
- CY3217-MiniProg1 programmer
- 5 PowerPSoC CY8CLED04D01-56LTXI samples
- Quick start guide

Inspect the contents of the kit; if any parts are missing, contact your nearest Cypress sales office for help.

1.2 Additional Learning Resources

Visit http://www.cypress.com/go/powerpsoc for additional learning resources in the form of datasheets, technical reference manuals, and application notes.

- CY3267-Power EVK Main Board_Schematic.pdf
  http://www.cypress.com/go/CY3267
- CY3267-Power EVK Main Board_Layout.zip
  http://www.cypress.com/go/CY3267
- CY3267-LED Daughter Board_Schematic.pdf
  http://www.cypress.com/go/CY3267
- CY3267-LED Daughter Board_Layout.zip
  http://www.cypress.com/go/CY3267
- CY3267 PowerPSoC® Lighting EVK documentation
  http://www.cypress.com/go/CY3267
- For a list of PSoC Designer-related training, see:
  http://www.cypress.com/?rID=40543
- PowerPSoC Intelligent LED Driver datasheet
  http://www.cypress.com/?rID=35354
- For more information regarding PSoC Designer functionality and releases, refer to the user guide and release notes on the PSoC Designer web page:
  http://www.cypress.com/go/psocdesigner
- For more information regarding PSoC Programmer, supported hardware, and COM layer, go to the PSoC Programmer web page:
  http://www.cypress.com/go/psocprogrammer
- AN47372 – PrISM™ Technology for LED Dimming
  http://www.cypress.com/?rID=2922
- AN51012 – CY8CLED0xx0x - PowerPSoC® Firmware Design Guidelines, Lighting Control Interfaces
  http://www.cypress.com/?rID=35365
- CY8CLED0xx0x PowerPSoC® – Hardware Design Guidelines
  http://www.cypress.com/?rID=35361

1.3 Document History

Revision	PDF Creation Date	Origin of Change	Description of Change
**	01/23/2009	QUS	Initial version of kit guide.
*A	02/10/2011	SNVN	Extensive content updates.
*B	06/21/2011	SNVN	Text and image updates.
*C	08/08/2012	MKKU	Kit guide updated to reflect 64-bit compatibility.
*D	12/04/2012	MKKU	Updated sections 2.3 PSoC Programmer and 3.3 Programming the PowerPSoC Device.
*E	02/08/2013	GULA	Updated all figures in chapter 2.
*F	06/28/2013	RICA	Content updates.
*G	07/12/2013	RICA	Content edit and review. Removed board layout images.
*H	09/03/2014	SNVN	Updated images. Added a note in section 2.5.1 Board Wiring Instructions.
*I	05/05/2017	SHEA	Updated logo and copyright

1.4 Documentation Conventions

Table 1-1. Document Conventions for Guides

Convention	Usage
`Courier New`	Displays file locations, user entered text, and source code: `C:\...cd\icc\`
Italics	Displays file names and reference documentation: Read about the *sourcefile.hex* file in the *PSoC Designer User Guide*.
[**Bracketed, Bold**]	Displays keyboard commands in procedures: [**Enter**] or [**Ctrl**] [**C**]
File > Open	Represents menu paths: File > Open > New Project
Bold	Displays commands, menu paths, and icon names in procedures: Click the **File** icon and then click **Open**.
Times New Roman	Displays an equation: 2 + 2 = 4
Text in gray boxes	Describes cautions or unique functionality of the product.

2. Getting Started

This chapter describes how to install and configure the CY3267 PowerPSoC Lighting EVK.

2.1 Install Kit Software

To install the kit software, follow these steps:

1. Download and install the CY3267 PowerPSoC Lighting EVK software from http://www.cypress.com/go/CY3267.
2. Select the folder to install the kit-related files. Choose the directory and click **Next**.
3. Click **Install CY3267 PowerPSoC** to start the installation, as shown in Figure 2-1.

   Figure 2-1. Kit Installer Startup Screen



4. Select the installation type and click **Next**.

Figure 2-2. CY3267 PowerPSoC - InstallShield Wizard



5. After the installation is complete, the kit contents are available at the following location:

   `<Install_Directory>\CY3267 PowerPSoC\<version>`

   Note For Windows 7 users, the installed files and the folder are read-only. To change the property, right-click the folder and select **Properties > Attributes**; disable the **Read-only** radio button. Click **Apply** and **OK** to close the window.

6. When installing the CY3267 PowerPSoC Lighting Evaluation Kit, the installer checks if the required software is installed in the system. If the required applications are not installed, then the installer prompts you to download and install them. The following software is required:

   a. PSoC Designer 5.4 or later: Download the latest version from www.cypress.com/go/psocdesigner.

   b. PSoC Programmer 3.19.1 or later: Download the latest version from www.cypress.com/go/Programmer.

   c. Code examples: After the kit installation is complete, the code examples are available in the kit firmware folder.

After installing the software, verify your installation and setup by opening PSoC Programmer with the MiniProg attached to the J12 programming header on the main board and the USB cable connected between the MiniProg and a USB port on your PC.

2.2 PSoC Designer

PSoC Designer is the revolutionary integrated design environment (IDE) that you can use to customize PSoC to meet your specific application requirements. PSoC Designer accelerates system bring-up and time-to-market. Customize your design leveraging the dynamically generated API libraries of code. Additional features of PSoC Designer are:

- Application editor GUI for device and user module configuration and dynamic reconfiguration
- Extensive user module catalog
- Integrated source code editor (C and Assembly)
- Free C compiler with no size restrictions or time limits
- Built-in debugger
- Integrated circuit emulation (ICE)
- Built-in support for communication interfaces
- Hardware and software I^2C slaves and masters
- Full-speed USB 2.0
- Up to 4 full-duplex UARTs, SPI master and slave, and wireless

To use PSoC Designer, follow these steps:

1. Click **Start** > **All Programs** > **Cypress** > **PSoC Designer <version>** > **PSoC Designer <version>**.
2. Click **File** > **New Project** to create a new project on the PSoC Designer menu or go to **File** > **Open Project/Workspace** to work with the existing project on the PSoC Designer menu.

Figure 2-3. PSoC Designer Interconnect View

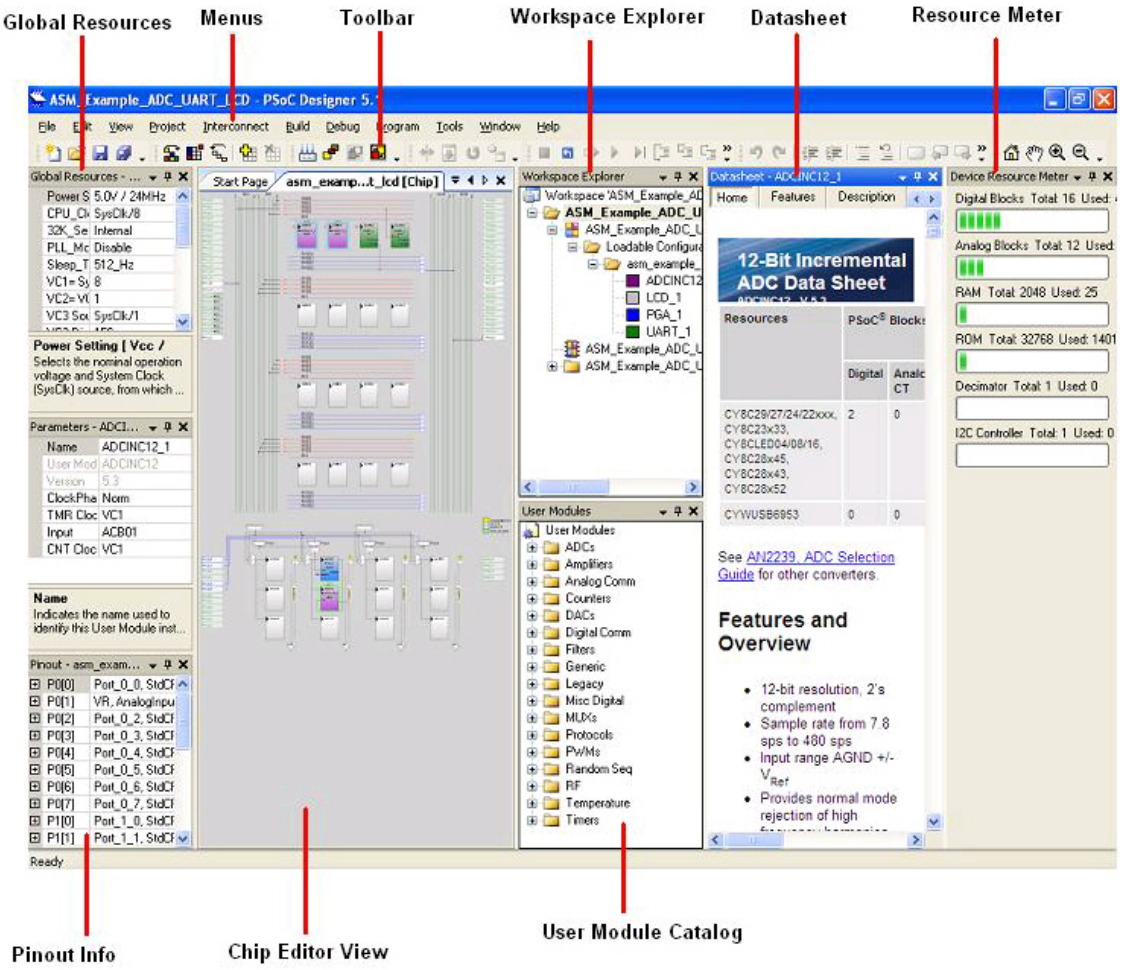

3. To experiment with the code examples, go to the Code Examples chapter on page 41.

Note For more information about PSoC Designer, go to **Help Topics** from the following directory: `<Install_Directory>\Cypress\PSoC Designer\<version>\PSoC Designer 5\Help`

2.3 PSoC Programmer

PSoC Programmer offers you a simple GUI that connects to programming hardware to program and configure PSoC, clock, and configurable fixed-function devices. Also provided with PSoC Programmer is the Bridge Control Panel, which can be used to debug, graph, and log I^2C serial communications using various Cypress software. PSoC Programmer also provides a hardware layer for customers to design custom applications or use existing code examples for testing hardware and firmware designs.

To use PSoC Programmer, follow these steps:

1. Click **Start** > **All Programs** > **Cypress** > **PSoC Programmer <version>** > **PSoC Programmer <version>**.
2. Use the USB cable to connect the MiniProg to the PC.
3. Connect the MiniProg to the ISSP header (J12) on the board.
4. Connect the MiniProg from **Port Selection**, as shown in Figure 2-4.

Figure 2-4. PSoC Programmer Window

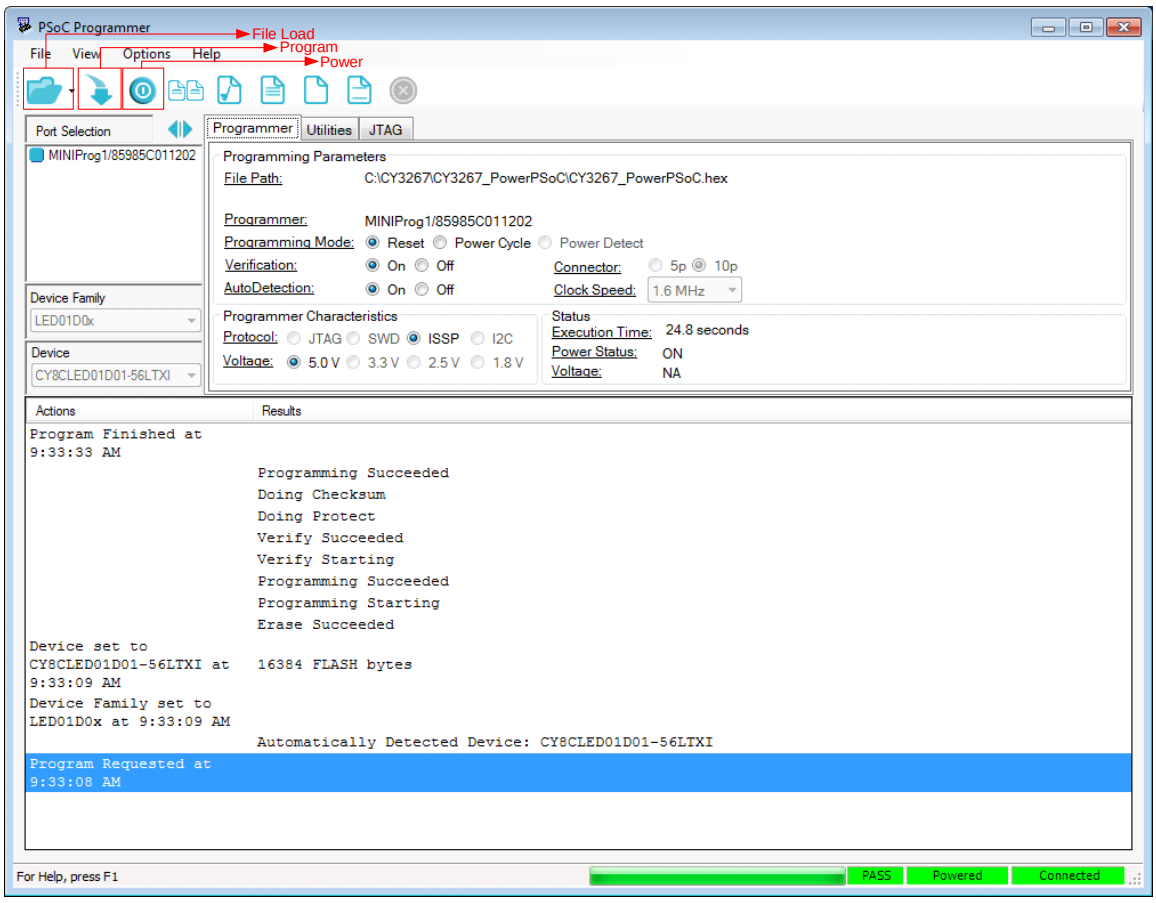

5. Click the **File Load** button to load the hex file.
6. If the board is not powered yet, set the Acquire Mode radio option to **Power Cycle**. If the board is powered, set the Acquire Mode radio option to **Reset**.
7. Set Verification to either setting.
8. Use the **Program** button to program the hex file onto the chip.

9. When the file is successfully programmed, **Programming Succeeded** appears on the Actions pane.
10. Close PSoC Programmer.

Note For more information about PSoC Programmer, go to **Help Topics** from the following path: `<Install_Dir>\Cypress\Programmer\<version>\PSoC_Programmer(Compiled HTML Help file).`

2.4 Install Intelligent Lighting Control GUI

The Intelligent Lighting Control application is installed as a prerequisite when you install the CY3267 PowerPSoC Lighting EVK contents. Follow the steps shown on the screen to complete the installation.

If you need to reinstall this application, select **Install Intelligent Lighting Control GUI** from the installation screen, as shown in Figure 2-1.

Click **Start > All Programs > Cypress > Intelligent Lighting Control**.

The Intelligent Lighting Control application controls the CY3267 PowerPSoC Lighting EVK over a USB interface from a PC, which runs on Windows XP (SP2 or higher), Vista, or Windows 7 (32-bit and 64-bit) operating system. The application's startup display, when a board is attached and operating, is shown in the following figure. Note that the GUI communicates to the board through the full-speed USB connection on the board – see the picture in Step 5 of the Quick Start Guide.

Figure 2-5. Intelligent Lighting Control GUI Window

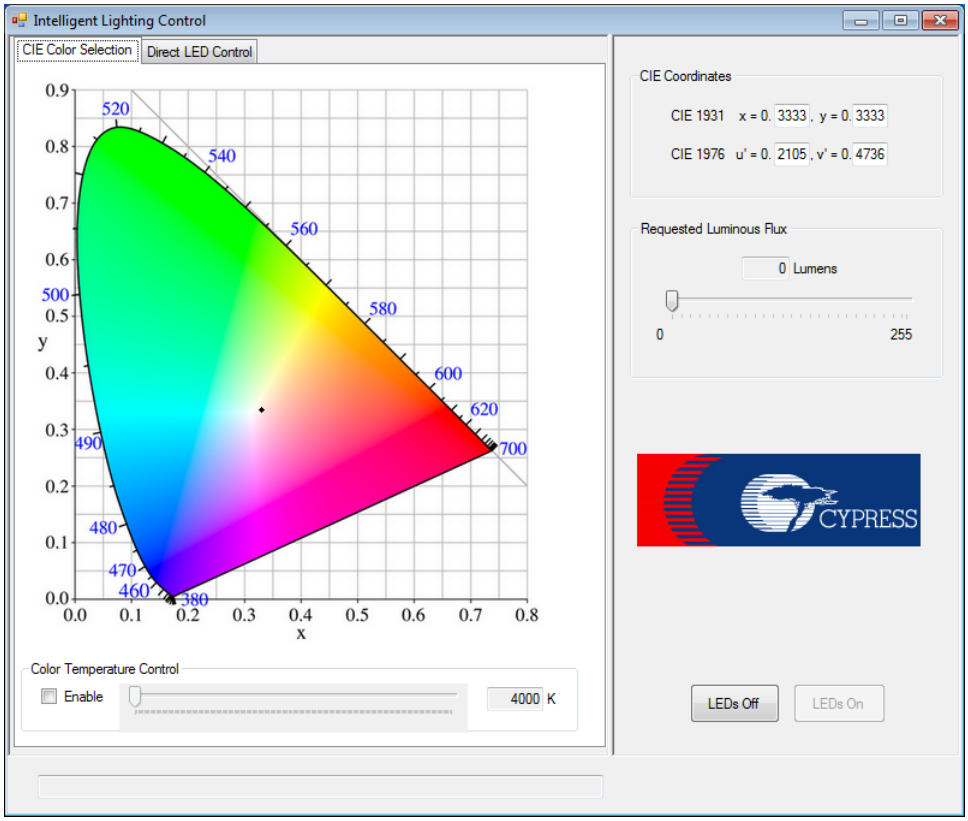

2.5 Install Hardware

2.5.1 Board Wiring Instructions

The CY3267 PowerPSoC EVK main board has five screw-terminal blocks to connect the LED daughter board. The four-post terminal block (J15) is used as the I^2C interface between PowerPSoC and the thermistor on the LED board. This terminal block contains the following signals:

Table 2-1. Signals

Signal	Wire Color
VDD (5 V)	Red
TEMP_DATA	Tan
TEMP_CLK	Green
GND (GROUND)	Black

The other four terminal blocks are used to connect the multicolor LED module on the LED daughter board to the CY3267 PowerPSoC EVK main board. These are J6 (red channel), J7 (blue channel), J10 (amber channel), and J11 (green channel). Each terminal block has three terminals. The topology and polarity that each terminal connects to is marked on the main PCB. Figure 2-6 shows a representation of the connections possible to the four terminal blocks. The CY3267 LED daughter board has two wires connected to each color of the module. One wire is connected to the anode of the LED while the other is connected to the cathode. Each terminal block has two possible wiring topology associated with it. The default topology is the Buck or Boost topology. The other is the Buck-Boost topology. Figure 2-6 shows the topology with wire colors and the posts they connect to.

Notes

- To prevent damage to the LED and PowerPSoC, ensure that the boards are wired according to Figure 2-6. After ensuring that the wiring is correct, connect the power supply included with the kit to the board. There is no additional power switch on the board. Use the CapSense ON/OFF button to turn on the LEDs.
- To support the floating load buck-boost topology, appropriate modifications must be done to the hardware. For more information, see the *Topology and Design Guide for Circuits using PowerPSoC*.

Figure 2-6. CY3267 Power EVK Main Board Wiring Scheme

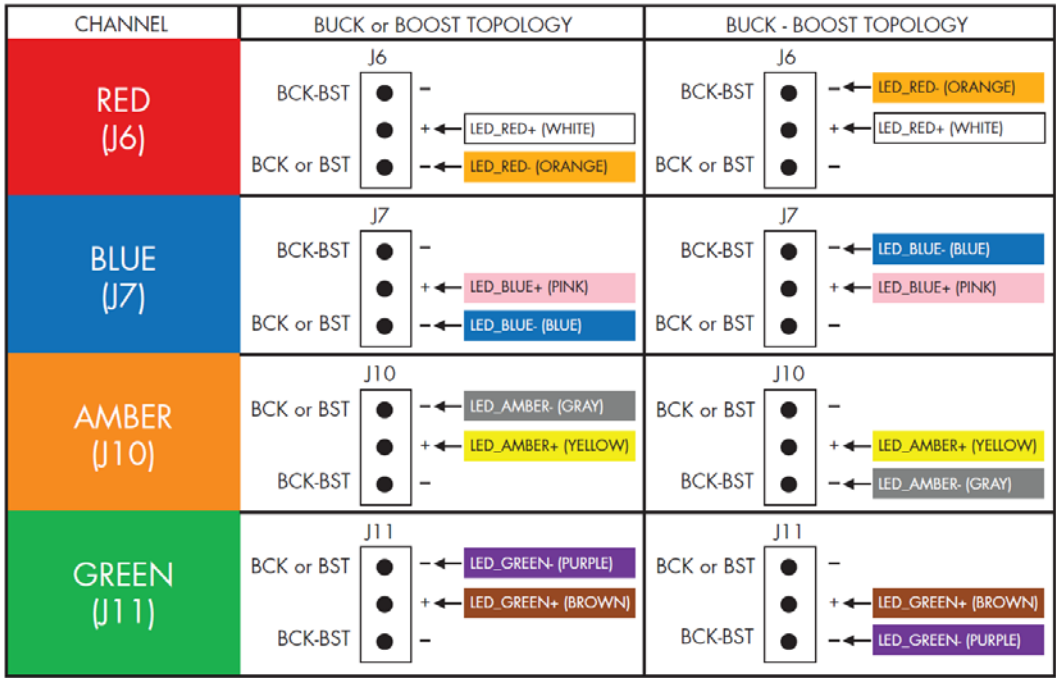

The positive terminal of each LED connector is a common terminal for LED connections in buck topology, boost topology, and buck-boost topology. See Figure 4-2.

Figure 2-7. CY3267 Main Board and LED Board Connected/Wired

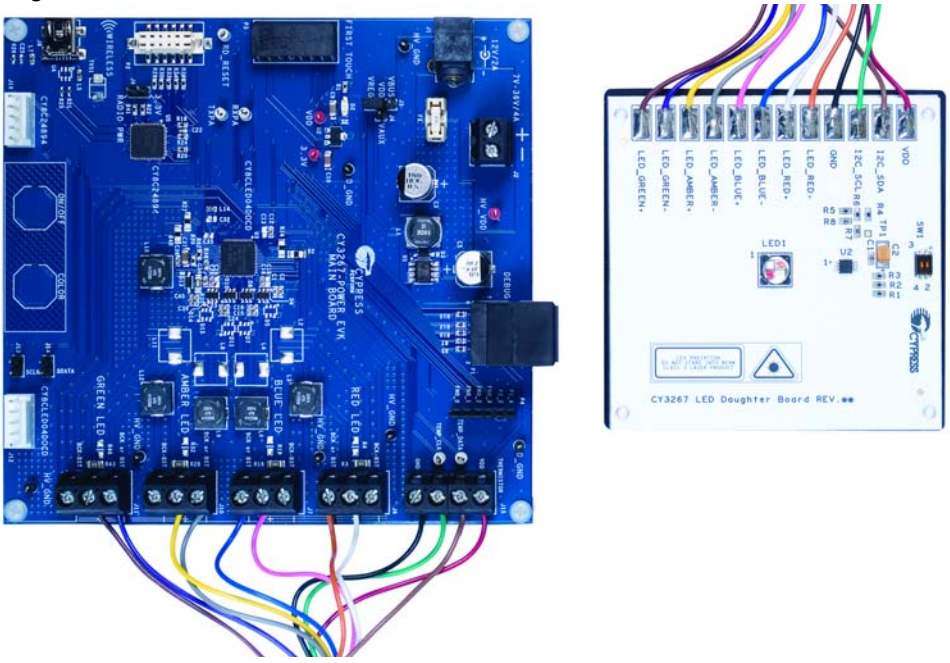

Figure 2-8. CY3267 System Level Diagram

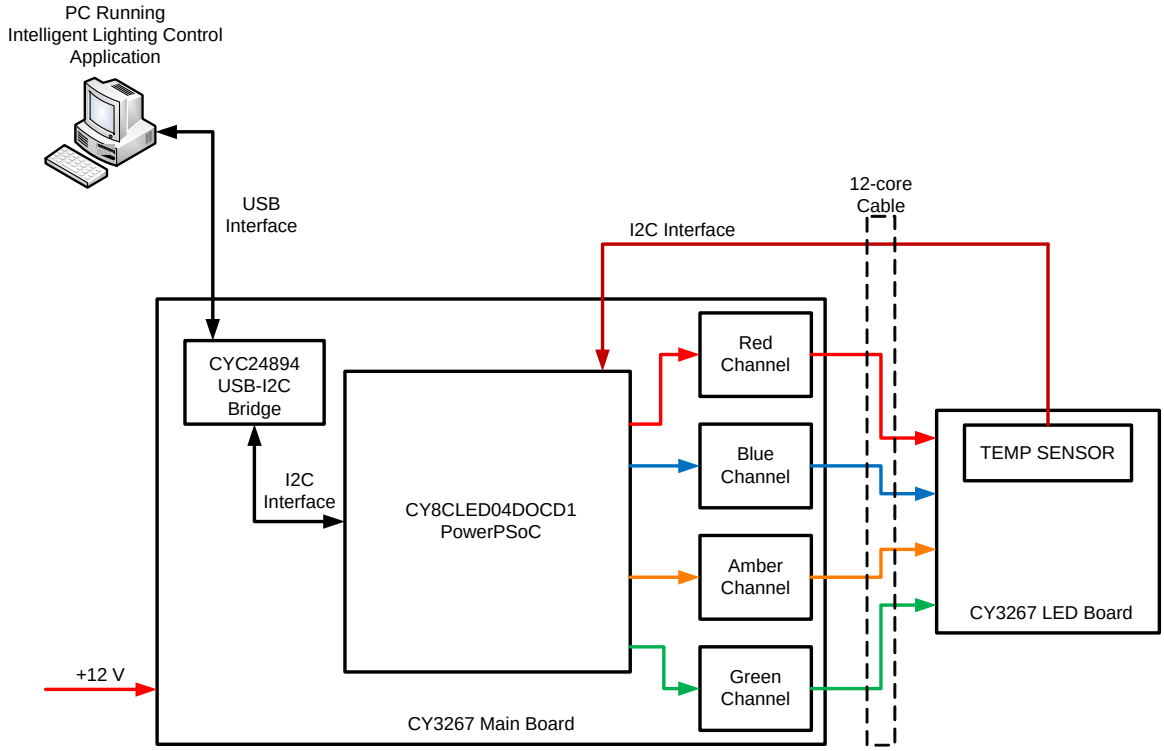

3. Kit Operation

3.1 Introduction

The CY3267 PowerPSoC Lighting EVK ships with factory-installed firmware that demonstrates the ability of PowerPSoC to drive multiple LED channels with color-mixing intelligence. The firmware also illustrates the use of PSoC Designer to design PowerPSoC-based systems and solutions.

The factory-installed code example implements the following elements with PowerPSoC:

- I^2C interface to receive the desired color coordinates and intensity information
- 4-channel LED dimming using PrISM technology
- Hysteretic current control, with switching current thresholds configured by DAC settings

The CY3267 PowerPSoC Lighting EVK provides a USB interface to a PC-based Intelligent Lighting Control GUI that allows you to select the desired color coordinate and intensity from the 1931 CIE chart. The USB interface is implemented in CY8C24894, which communicates this data over I^2C to the PowerPSoC.

Select the desired color using the Intelligent Lighting Control GUI or the CapSense buttons on the CY3267 Power EVK main board. These inputs are captured by the firmware in CY8C24894 and transmitted to the PowerPSoC over an I^2C interface. The PowerPSoC firmware receives the target color coordinates and calculates the intensities of each of the four individual colors (red, green, blue, and amber) using an intelligent color-mixing algorithm. The PowerPSoC also implements the hysteretic current control loop along with dimming control to drive the LED.

3.2 Theory of Operation

In the CY3267 PowerPSoC Lighting EVK, there are two ways to control the High-Brightness LEDs in the LED daughter board. One is through the on-board CapSense buttons and the other is through the USB interface. Along with the PowerPSoC, the CY3267 PowerPSoC Lighting EVK also has the CY8C24894 device, which supports the CapSense and USB interface. The communication between the PowerPSoC device CY8CLED04DOCD and the CY8C24894 device is through the I^2C interface. Refer to Figure 4-1 on page 21 for the block diagram representation of the kit.

The factory-installed firmware supports both the CapSense and USB interface features. The CY3267 Power EVK main board has two capacitive sensing buttons connected directly to the CY8C24894 PSoC device. If the default firmware is used, the button on the left switches the LEDs on and off while the button on the right cycles through various color combinations displayed on the CY3267 LED daughter board.

The Intelligent Lighting Control application controls the CY3267 PowerPSoC Lighting EVK over the USB interface. The application has two modes of control: CIE Color Selection Mode and Direct LED Control Mode. For a detailed description of the Intelligent Lighting Control application, refer to the Software chapter on page 36.

The CY8C24894 device takes the input from the GUI over the USB interface and passes it on to the PowerPSoC over the I^2C interface. The PowerPSoC firmware receives the target color coordinates and calculates the intensities of each of the four individual colors (red, green, blue, and amber) using an intelligent color-mixing algorithm. The PowerPSoC also implements the hysteretic current control loop along with dimming control to drive the LED.

3.3 Programming the PowerPSoC Device

You can program the PowerPSoC device on the board using a MiniProg. To use the MiniProg for programming, use the ISSP programming header J12 on the board. Do not place jumpers J13 and J14.

Figure 3-1. ISSP (J12) Programming Header

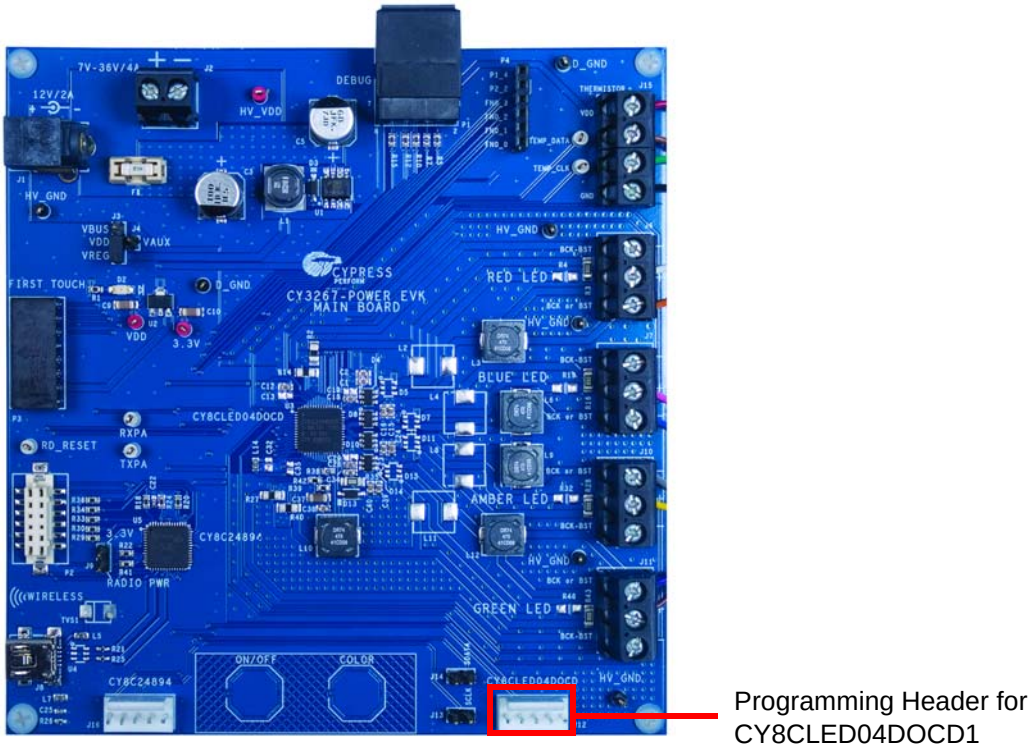

3.3.1 Programming using PSoC Designer

To program the device using PSoC Designer:

1. Open the project in PSoC Designer and build the project.
2. Use the USB cable to connect the MiniProg to the PC.
3. Connect the MiniProg to the ISSP header (J12) on the board.
4. In PSoC Designer, select **Program > Program Part** from the menu bar.

5. In the Program Part dialog box, verify that the **Port Selection** field shows the connection to a MiniProg1.

Figure 3-2. Program Part Dialog

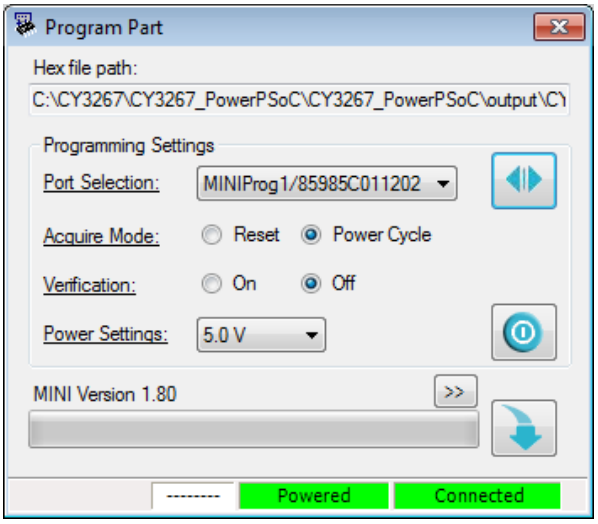

6. If the board is not powered yet, set the Acquire Mode radio button to **Power Cycle**. If the board is powered, set the Acquire Mode to **Reset**.
7. Verification can be either setting.
8. Click the **Program** button (bottom-right corner of the dialog box). Wait until the progress bar completes.

On completion, the status displays the phrase “Operation Succeeded!”.

Figure 3-3. Operation Succeeded Message

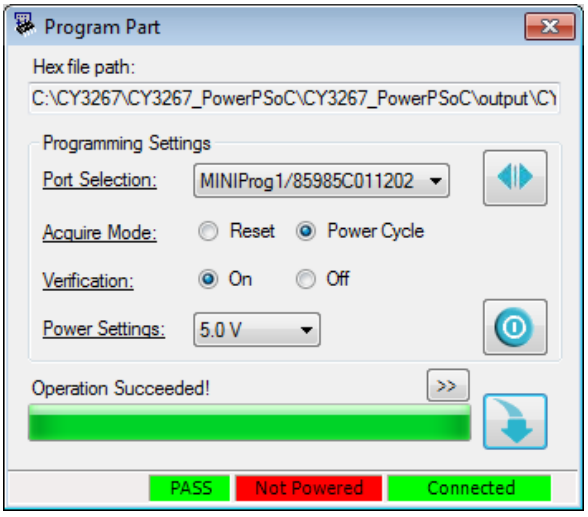

To program the device using the PSoC Programmer interface, see the section PSoC Programmer on page 12.

4. Hardware

4.1 CY3267 Power EVK Main Board

The CY3267 PowerPSoC Lighting EVK has the following sections:

- CY3267 Power EVK main board
  - Power supply
  - PowerPSoC
  - Programming interface
  - Debug interface
  - Connectors and ports
  - LED board interface
  - FirstTouch RF interface
  - Artaflex™ radio module interface
  - Full-speed USB interface
  - Fan and thermistor interface
  - CapSense buttons
- CY3267 LED Daughter Board
  - LED module
  - CY3267 Power EVK main board interface
  - Temperature sensor

Figure 4-1. CY3267 PowerPSoC Block Diagram

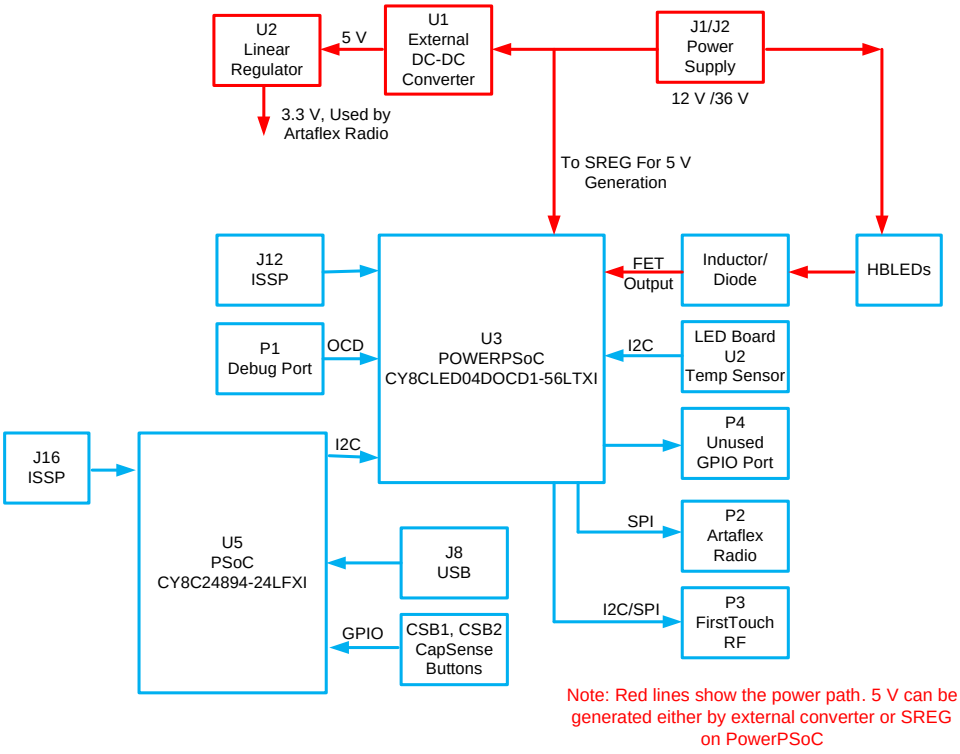

Figure 4-2. Functional Description

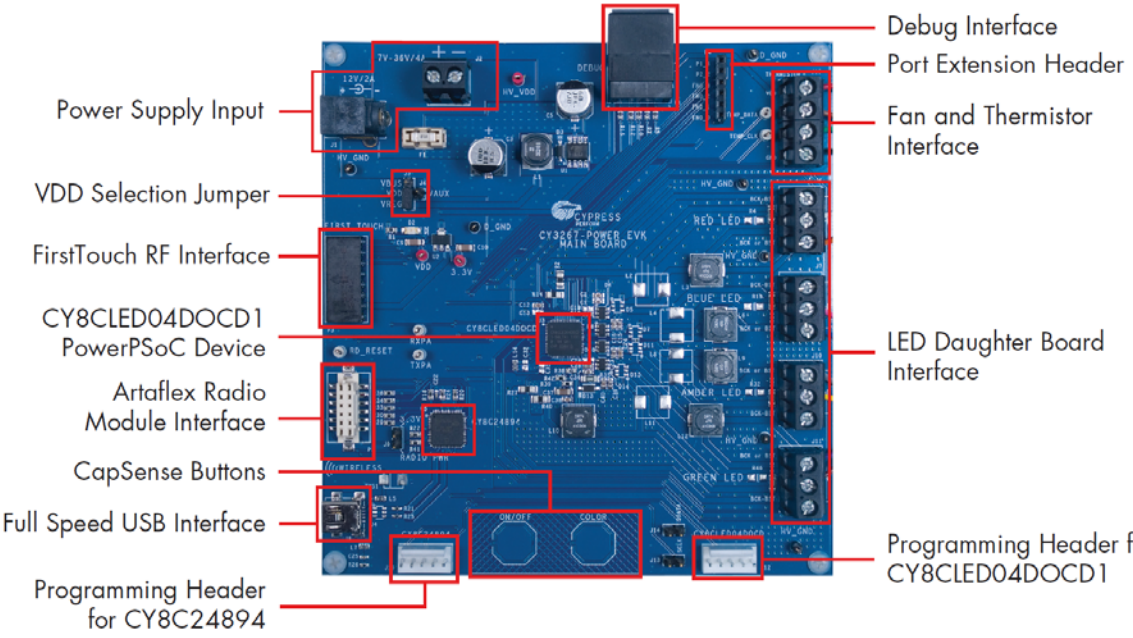

Table 4-1. CY3267 Power EVK Main Board Specifications

Feature	Description
CY3267 Power EVK main board power source (wall-wart)	12 V D C, 2 A
CY3267 Power EVK main board power source (external power supply through screw terminals J2)	32 V DC, 4 A
Maximum power consumption	128 W (32 V × 4 A)
Board size	4.75 × 5 × 0.063 inches (121 × 127 × 1.62 mm)
Layer count	4 layers (TOP, GND, HV_VCC, BOTTOM)

Figure 4-2 shows the key components of the CY3267 Power EVK main board. The board provides options to interface the Artaflex WirelessUSB radio module, the FirstTouch RF interface, and a thermistor interface for the CY3267 LED daughter board. The factory-installed code example does not use these interfaces.

4.1.1 Power Supply

The board has several power nets, which are defined as follows:

- HV_VDD (7 V to 32 V) – This is the input power before it is fed to any of the regulators.
- VDD (5 V) – This is the power provided to the PSoC devices.
- VREG (5 V) – This is fed by HV_VDD and is the output of the onboard 5-V regulator.
- VAUX (5 V) – This is fed by HV_VDD and is the output of the PowerPSoC auxiliary 5 V regulator.
- VBUS (5 V) – This is the power derived from the USB interface using a USB host.
- 3.3 V – This is fed by the onboard 5-V regulator (VREG).

Use a 12-V/2-A wall wart power supply when powering from the barrel power jack. This input power is HV_VDD. The barrel power-jack is equipped with an internal switch; when a wall wart power supply is plugged in, this switch disengages the J2 ground terminal, preventing the board from being overpowered by more than one power supply.

Figure 4-3. Screw Terminal Power Block

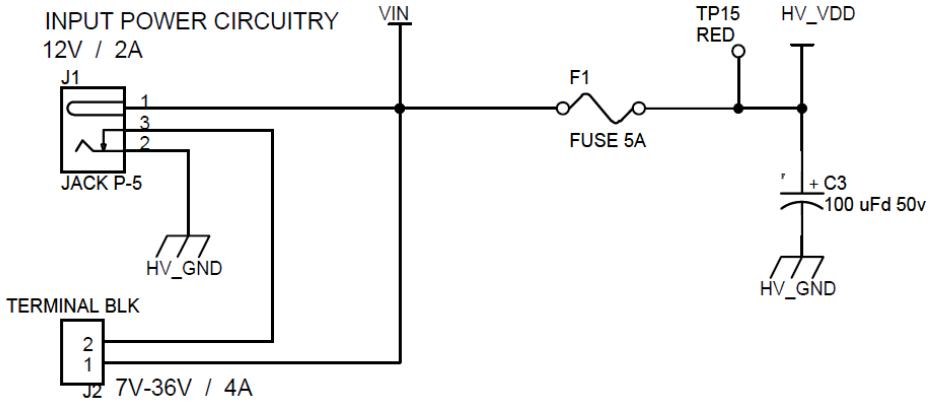

- J1 - DC power jack
- J2 - Screw terminal power block

  This terminal block provides the ability to power the CY3267 Power EVK main board with a bench power supply. The terminal block supports 7 V to 32 V at up to 4 A. A wall wart power supply should not be used if power is supplied to the board through the J2 terminal block.

Figure 4-4. Power System Structure

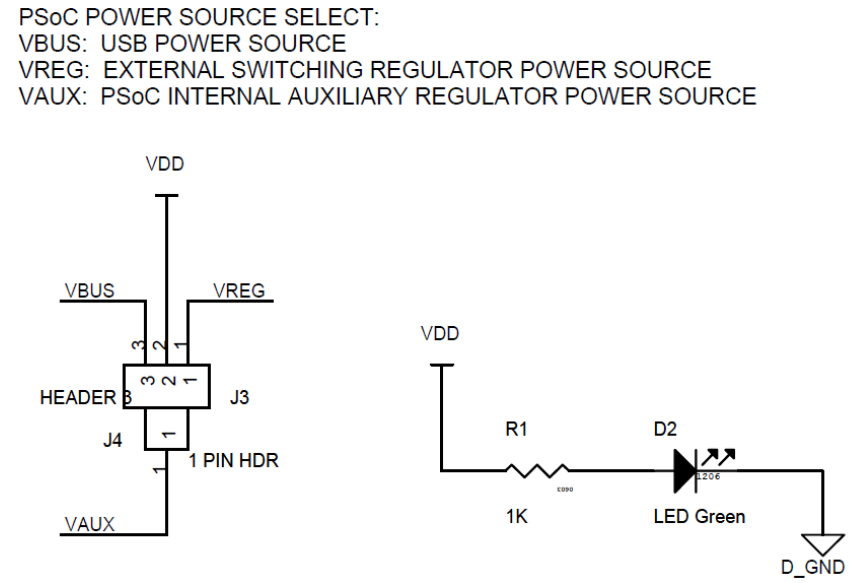

- J3 - PSoC power

  This header allows you to select the 5-V source from the onboard regulator (VREG), the PowerPSoC auxiliary regulator (VAUX), or from the USB 5-V rail (VBUS).

Figure 4-5. External Regulators

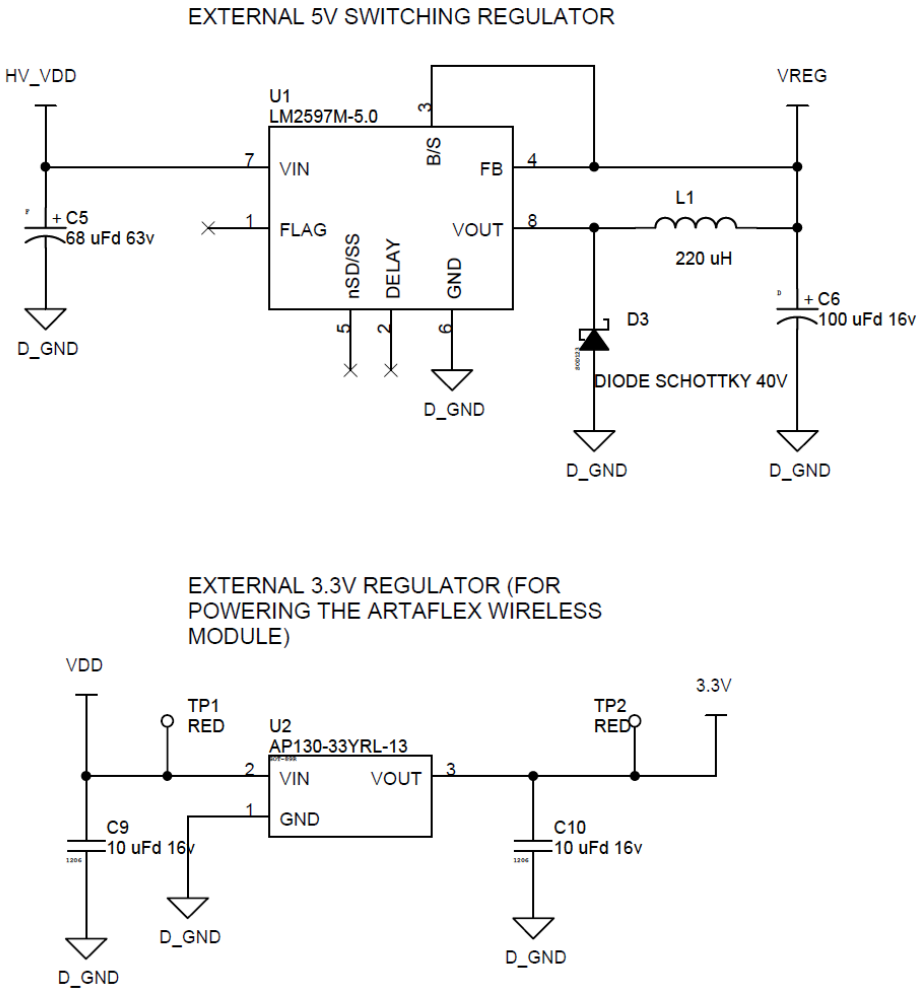

4.1.1.1 *Grounding Scheme*

- HV_GND - Ground reference for high-voltage HV_VDD net.
- D_GND - Ground reference for digital 5-V net.

Figure 4-6. Star Point for all GND Points

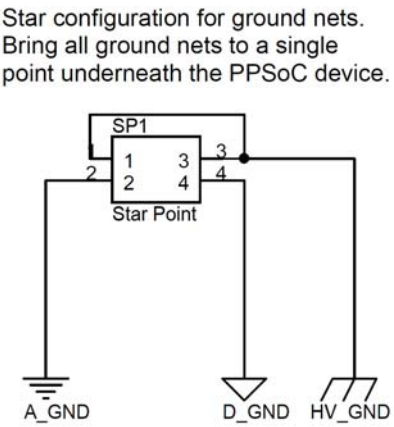

4.1.2 PowerPSoC

The CY3267 Power EVK main board is populated with components for the floating-load buck topology. The floating load buck topology (see Figure 4-8 as an example) consists of two ceramic input bypass capacitors (0.1 µF and 1.0 µF) each rated for 50-V in 0603 package size. These are low equivalent series resistance (ESR) type capacitors. Current flow through the LED is sensed by the PowerPSoC device using a 0.1-Ω sense resistor. The LED is attached to the terminal block (J6) with the anode side connected to the center pin 2 labeled with a '+' sign. The cathode side of the LED is connected to pin 3 of the terminal block labeled '–' or 'BCK or BST'. The inductor is rated for 1.41 A to handle high peak currents.

Diode selection also considers the peak current given the inductor size and ripple current. The diode is a 40-V, 2.2-A rated Schottky type diode. The circuit also includes a zener diode connected to the PowerPSoC FET drain to protect the drain voltage from climbing above 36 V.

Note The terminal block pins 1 and 3 for J10 and J11 are swapped from that of J6 and J7. Ensure that the cathode terminal of LED is connected to the pin labeled 'BCK or BST' on the CY3267 Power EVK main board.

Figure 4-7. PowerPSoC Connections

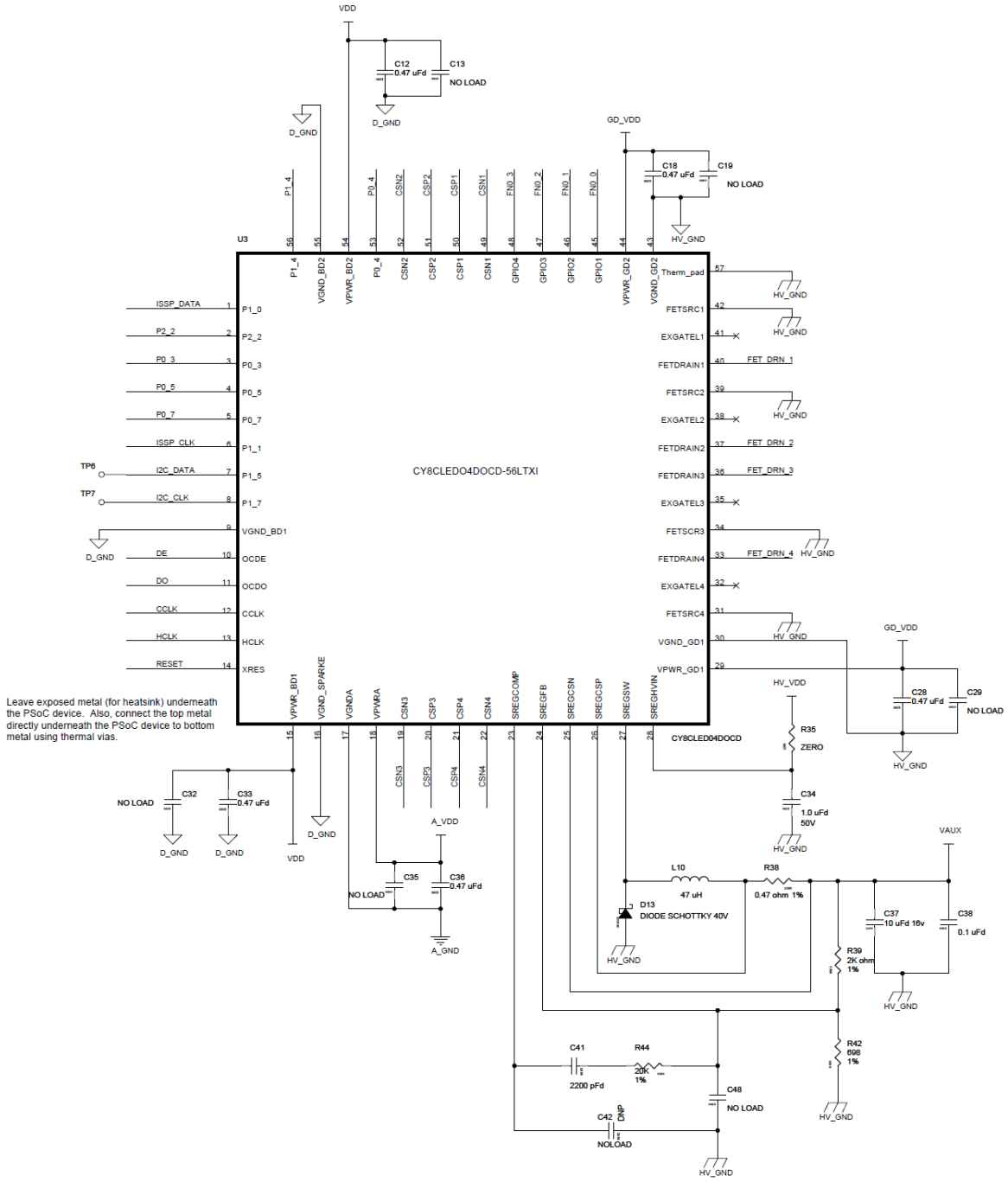

Figure 4-8. Floating-Load Buck Topology, Single Channel

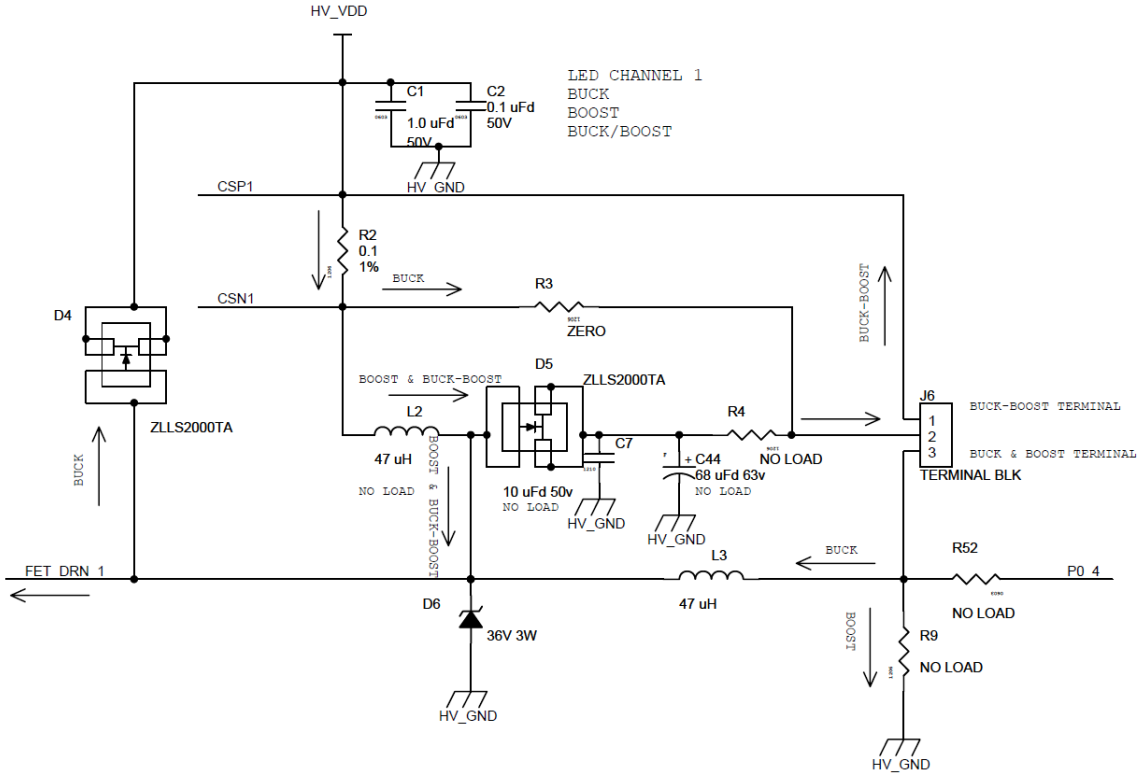

Table 4-2. Pin Description

Pin No.	Name	Description	Connected To
1	P1[0]	GPIO/I^{2}C SDA (Secondary)/ ISSP SDATA	ISSP _DATA
2	P2[2]	GPIO/Direct Switch Cap connection	P4, Extra GPIO
3	P0[3]	GPIO/Analog Input (Column 0)/ Analog Output (Column 0)	R53, Boost Current Sense, Channel 2
4	P0[5]	GPIO/Analog Input (Column 0)/ Analog Output (Column 1) / CapSense Ref Cap	R54, Boost Current Sense, Channel 3
5	P0[7]	GPIO/Analog Input (Column 0)/CapSense Ref Cap	R55, Boost Current Sense, Channel 4
6	P1[1]	GPIO/I^{2}C SCL (Secondary)/ISSP SCLK	ISSP_CLK
7	P1[5]	GPIO/I^{2}C SDA (Primary)	I2C_DATA
8	P1[7]	GPIO/I^{2}C SCL (Primary)	I2C_CLK
9	V_{SS}	Digital Ground	D_GND
10	OCDE	On-Chip Debugger Port	P1, OCD, DE
11	OCDO	On-Chip Debugger Port	P1, OCD, DO
12	CCLK	On-Chip Debugger Port	P1, OCD, CCLK
13	HCLK	On-Chip Debugger Port	P1, OCD, HCLK
14	XRES	External Reset	RESET
15	V_{DD}	Digital Power Supply	
16	V_{SS}	Digital Ground	
17	AV_{SS}	Analog Ground	
18	AV_{DD}	Analog Power Supply	

Pin No.	Name	Description	Connected To
19	CSN2	Current Sense Negative Input 2	
20	CSP2	Current Sense Positive Input and Power Supply - CSA2	
21	CSP3	Current Sense Positive Input and Power Supply - CSA3	
22	CSN3	Current Sense Negative Input 3	
23	SREGCOMP	Voltage Regulator Error Amp Comp	
24	SREGFB	Regulator Voltage Mode Feedback Node	
25	SREGCSN	Current Mode Feedback Negative	
26	SREGCSP	Current Mode Feedback Positive	
27	SREGSW	Switch Mode Regulator OUT	
28	SREGHVIN	Switch Mode Regulator IN	
29	GDV_{DD}	Gate Driver Power Supply	
30	GDV_{SS}	Gate Driver Ground	
31	PGND3	Power FET Ground 3	
32	GD3	External Low Side Gate Driver 3	
33	SW3	Power Switch 3	
34	PGND2	Power FET Ground 2	
35	GD2	External Low Side Gate Driver 2	
36	SW2	Power Switch 2	
37	SW1	Power Switch 1	
38	GD1	External Low Side Gate Driver 1	
39	PGND1	Power FET Ground 1	
40	SW0	Power Switch 0	
41	GD0	External Low Side Gate Driver 0	
42	PGND0	Power FET Ground 0	
43	GDV_{SS}	Gate Driver Ground	
44	GDV_{DD}	Gate Driver Power Supply	
45	FN0[0]	Function I/O	P4, Extra GPIO
46	FN0[1]	Function I/O	P4, Extra GPIO
47	FN0[2]	Function I/O	P4, Extra GPIO
48	FN0[3]	Function I/O	P4, Extra GPIO
49	CSN0	Current Sense Negative Input 0	
50	CSP0	Current Sense Positive Input and Power Supply - CSA0	
51	CSP1	Current Sense Positive Input and Power Supply - CSA1	
52	CSN1	Current Sense Negative Input 1	
53	P0[4]	GPIO/Analog Input (Column 1) / Bandgap Output	R52, Boost Current Sense, Channel 1
54	V_{DD}	Digital Power Supply	
55	V_{SS}	Digital Ground	
56	P1[4]	GPIO/External Clock Input	P4, Extra GPIO

4.1.3 Programming Interface

The board also provides the option of using the MiniProg. This interface is faster and the programming is done through the 5-pin connector, J12.

Headers J13 and J14 allow you to expand the system to support external daughter cards with I^2C-capable interfaces. DALI and DMX512 daughter cards are examples of expandable cards that can be used with this board. Programming header J12 doubles as a programming header for the CY8CLED04DOCD device and an I^2C interface to the CY8CLED04DOCD device. Placing shunts on J13 and J14 to pull up the I^2C clock and data lines is necessary if these daughter cards are used. Otherwise, do not shunt these two headers.

Figure 4-9. Programming Interface

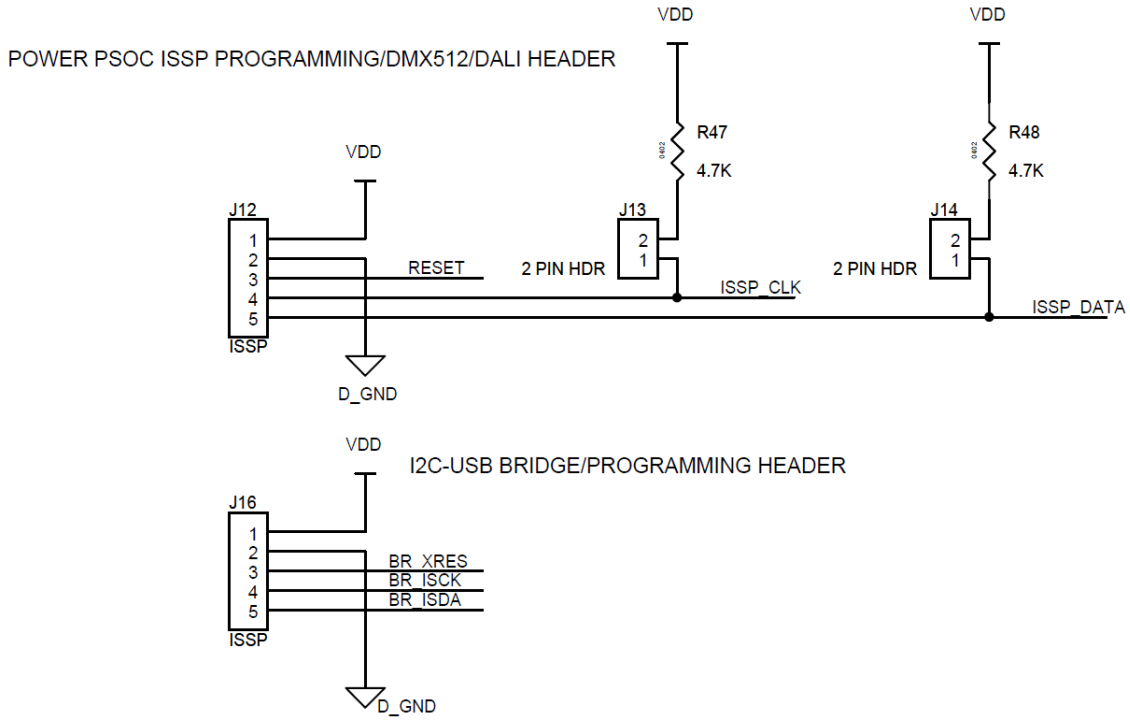

4.1.4 Debug Interface

P1 - RJ45 ICE Cube Emulation Connector

This RJ45 receptacle provides a debug interface between the CY8CLED04DOCD device and the ICE-Cube emulation tool using the PSoC Designer software application.

The ICE-Cube emulation tool is not provided with this kit. You can purchase it online from http://www.cypress.com/go/CY3215A-DK.

Figure 4-10. Debug Interface

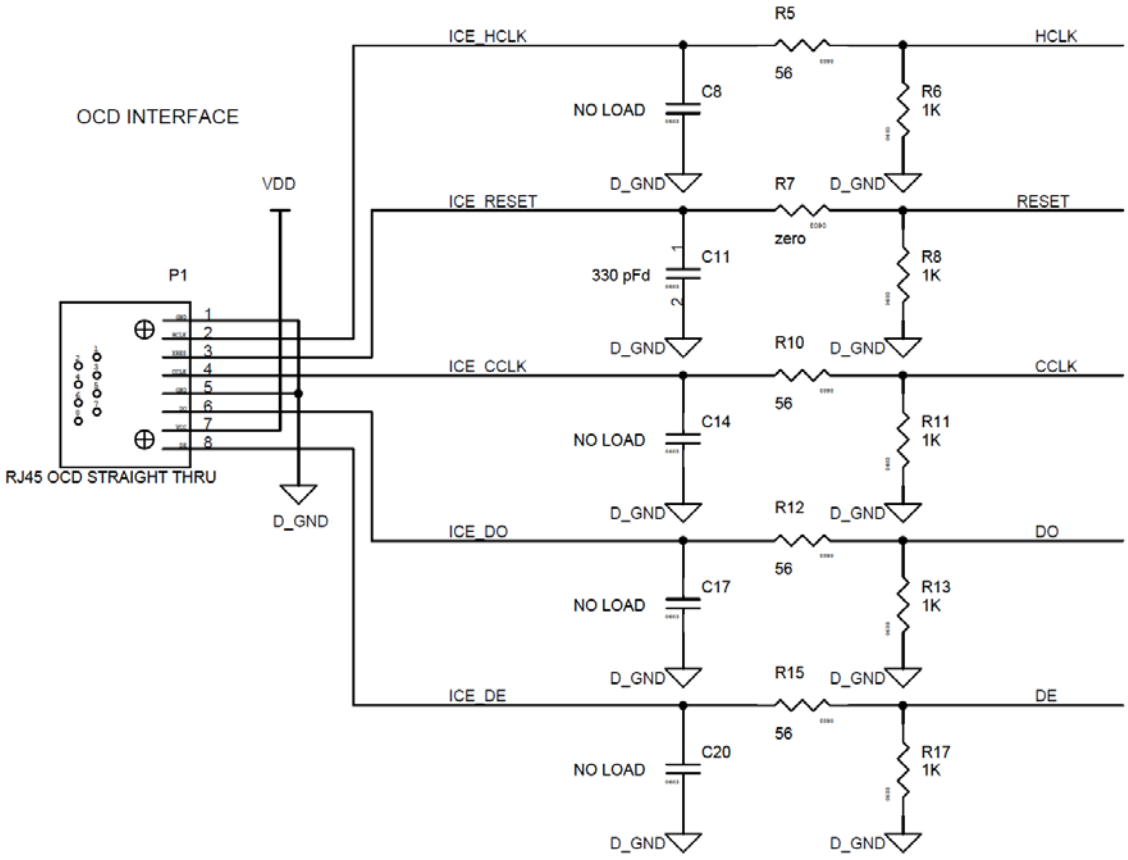

4.1.5 Connectors and Ports

P4 - Unused GPIO

Receptacle P4 provides access to the unused GPIO of the PowerPSoC device.

Figure 4-11. Extra I/O Header/Receptacle

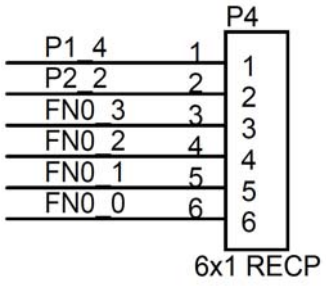

4.1.6 LED Board Interface

J6, J7, J10, J11 - CY3267 LED Daughter Board Connectors

These four terminal blocks provide the LED power interface between the CY3267 Power EVK main board and the CY3267 LED daughter board. The terminal blocks are labeled ‘BCK or BST’ and ‘BCK-BST’. If the board is configured for buck or boost operation, the CY3267 LED daughter board should be wired with the ‘+’ wire (LED cathode) connected to the center terminal and the ‘–’ wire (LED anode) connected to the terminal labeled ‘BCK or BST’. If the board is configured for buck-boost operation, the CY3267 LED daughter board should be wired with the ‘+’ wire connected to the center terminal and the ‘–’ wire connected to the terminal labeled ‘BCK-BST’.

Figure 4-12. LED Board Interface - Single Channel

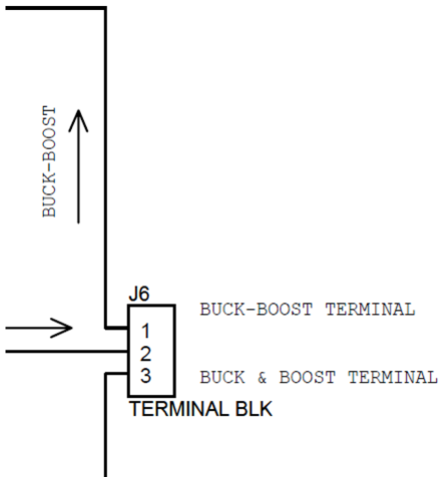

4.1.7 FirstTouch RF Interface

P3 - FirstTouch RF Radio Module Connector

This 16-pin connector provides an interface to the CY3271 FirstTouch radio module. The module is powered by a 3.3-V source and communicates with the CY8C24894 device using the I^2C protocol.

Figure 4-13. FirstTouch RF Interface

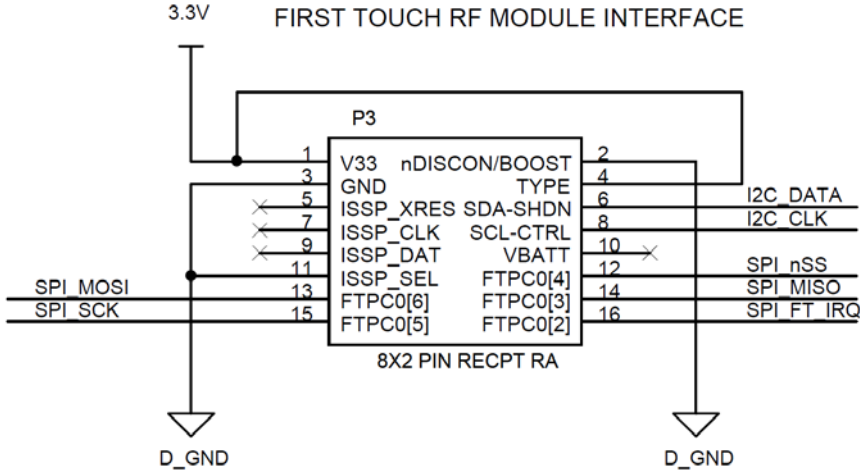

The FirstTouch RF radio module is not provided with this kit. You can purchase it online from http://www.cypress.com/go/CY3271.

4.1.8 Artaflex Radio Module Interface

P2 - Artaflex Radio Module Connector

This 12-pin connector provides an interface to the Artaflex radio module. The module is powered by a 3.3-V source and communicates with the CY8C24894 device using the SPI protocol. You can obtain Artaflex radio modules from http://www.artaflexmodules.com.

Figure 4-14. Artaflex Radio Module

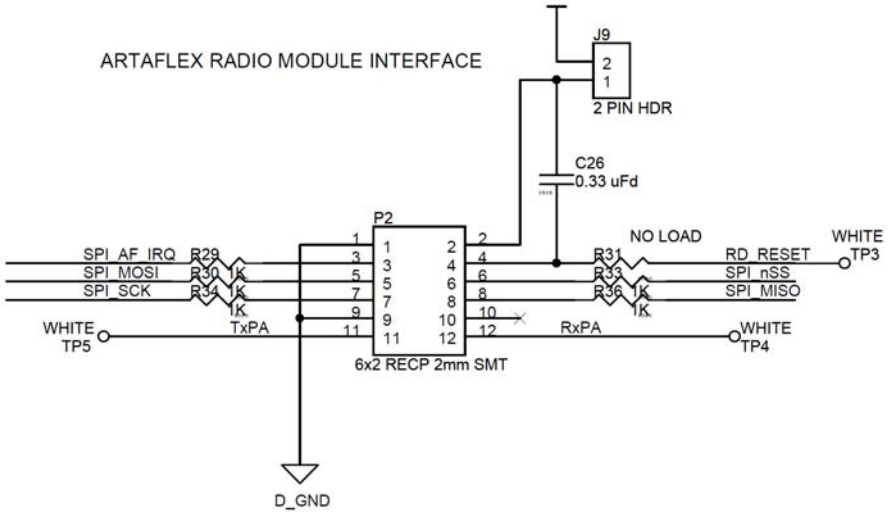

4.1.9 Full Speed USB Interface

J8 - Full Speed USB Port

The board has a mini-B full-speed USB connector. It also has two test points for the differential pair signals D– and D+. The power net VBUS is brought into the board through this interface.

Figure 4-15. USB Full-Speed Connector

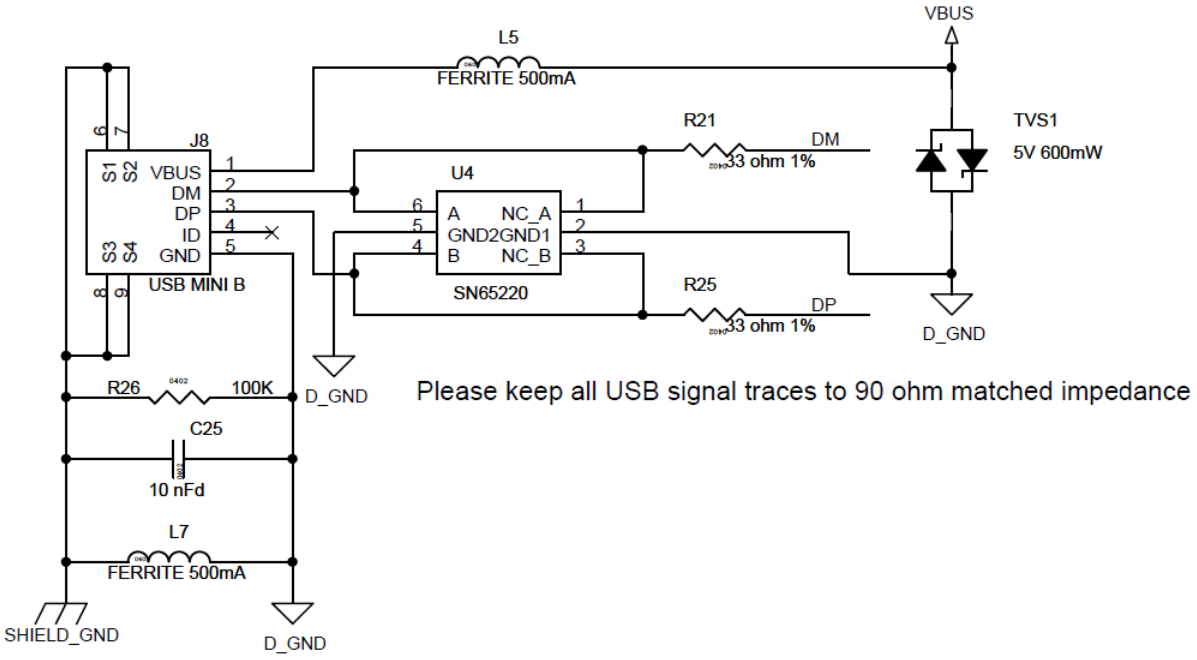

4.1.10 CapSense Buttons

The CY3267 Power EVK main board has two capacitive sensing elements connected directly to the CY8C24894 PSoC device. If the default firmware is used, the button on the left switches the LEDs on and off while the button on the right cycles through various color combinations displayed on the CY3267 LED daughter board.

Figure 4-16. CapSense Buttons

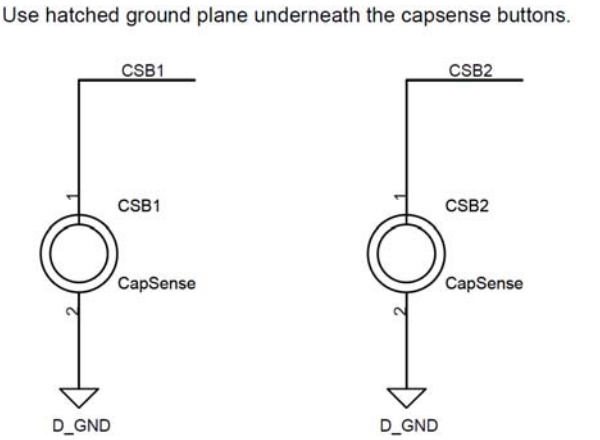

4.1.11 Fan and Thermistor Interface

J15 - CY3267 LED Daughter Board Thermistor

This terminal block provides an interface for I^2C communication between the CY3267 Power EVK main board and the CY3267 LED daughter board. The terminals are clearly labeled, and you can wire them one-to-one with the LED board using the VCC, GND, DATA, and CLK wires.

Figure 4-17. I^2C Interface

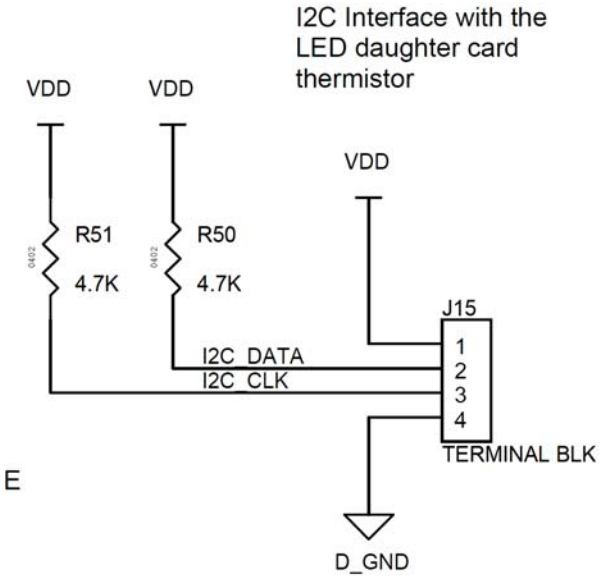

4.1.12 CY3267 LED Daughter Board Functional Description

Figure 4-18. CY3267 LED Daughter Board

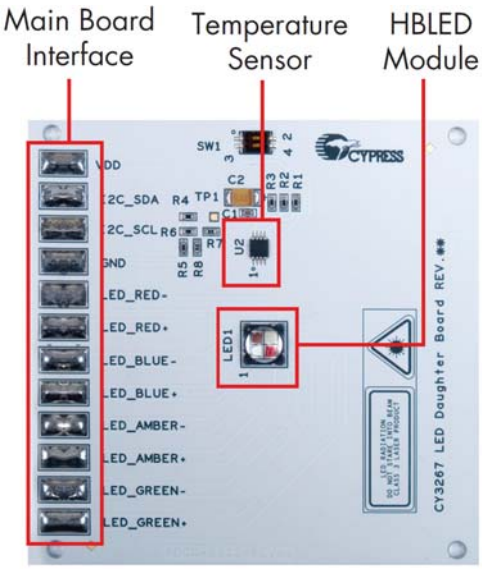

Table 4-3. CY3267 LED Daughter Board Specification

Feature	Description
Power source	5 V (via J15)
Maximum power consumption	5 V, 1 mA (5 mW)
Board size	3.15 × 3.15 × 0.063 inches (80 × 80 × 1.62 mm)
Layer count	2 layers (top, bottom)

4.1.13 HBLED Module

The HBLED module is rated at 1 A.

Figure 4-19. HBLED Module

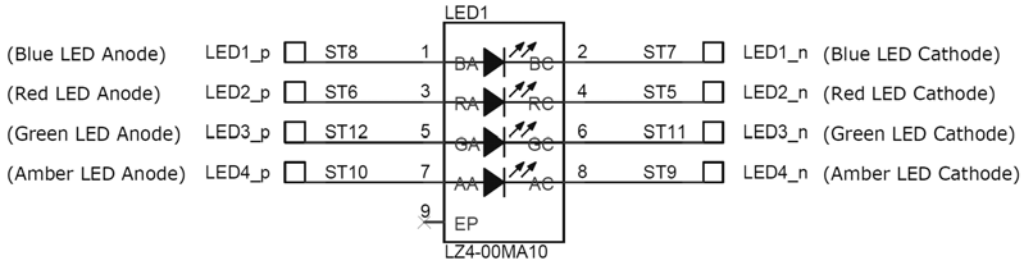

4.1.14 CY3267 Power EVK Main Board Interface

The connections to the CY3267 Power EVK main board interface are brought to the edge of the CY3267 LED Daughter Board and terminated in pads. The wire ends of a cable are soldered to these pads.

Figure 4-20. CY3267 Power EVK Main Board Interface

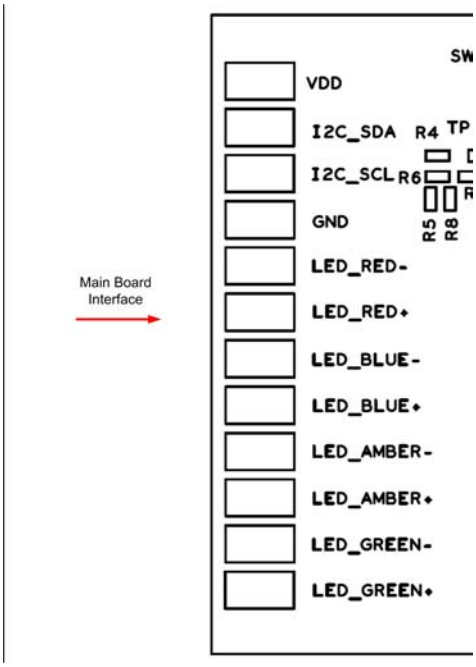

4.1.15 Temperature Sensor

The temperature sensor on the board helps to measure the temperature of HBLEDs. It has an I^2C interface.

Figure 4-21. Temperature Sensor Schematic

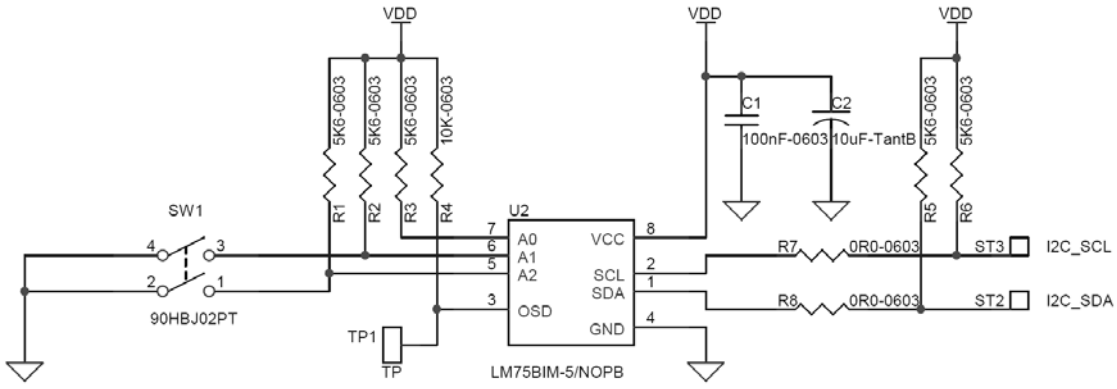

5. Software

WARNING: HIGH-BRIGHTNESS LEDs CAN CAUSE PERMANENT DAMAGE!

Do not look at the HBLEDs if they are not covered by the optical diffuser. The HBLEDs illuminate at very high intensity and can cause permanent eye damage. Use a thick white sheet of paper as a diffuser if there is no optical diffuser available.

WARNING: Generally all lab work in power electronics must be done with extreme care. Caution must be exercised when using power supplies and power-related equipment.

The Intelligent Lighting Control application controls the CY3267 PowerPSoC Lighting EVK over a USB interface from a PC that runs on a Windows XP (SP2 or higher), Vista, or Windows 7 (32-bit and 64-bit) operating system. The application's startup display, with a board attached and operating, is shown in the following figure:

Figure 5-1. Intelligent Lighting Control – CIE Color Selection

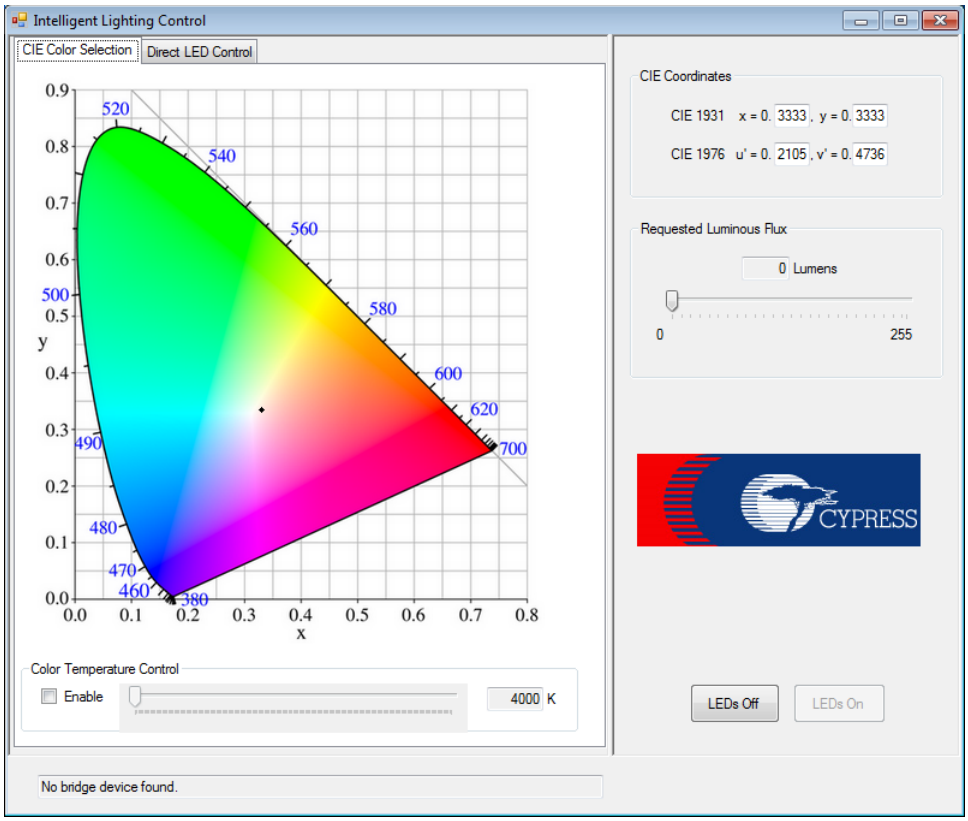

5.1 Representing Colors

The application has two modes of control: CIE Color Selection Mode and Direct LED Control Mode; see Figure 5-1. These two modes are selected using tabs displayed on the upper-left edge of the application window. The CIE Color Selection Mode is the active display when the application is started and is intended to be the most common mode used to control the CY3267 PowerPSoC Lighting EVK. The colors that can be mixed are determined by the choice of LEDs used in the unit. The colors produced by individual LEDs are referred to as primary colors. All other colors are created by mixing these primary colors. Mixed colors appear as though produced by an LED with that color as its only color. The interior portion of the polygon displayed on the color chart represents the range of colors that can be mixed by the LEDs in the unit. The range of colors that can be mixed when using a given set of primary LEDs is called the color gamut. When the primary LED colors are determined, as they are in the evaluation unit, the color gamut is defined by those choices. Thus, the polygon displayed by the application defines the color gamut for the unit. Colors outside the color gamut cannot be represented by the given LEDs, and thus, cannot be selected by the user.

The CIE Color Mix Mode displays the 1931 CIE color chart. This chart represents the range of colors visible to the human eye. Clicking anywhere within the color gamut polygon places a dot at the selected point. The corresponding CIE coordinates for that color coordinate are transmitted to the CY3267 Power EVK main board, where the selected color is displayed by adjusting the four LEDs to brightness levels that create the specified mixed color. The resulting coordinates are displayed in the CIE Coordinates panel on the upper right portion of the display. The CIE 1931 x, y coordinates are displayed in the upper two coordinate fields and the u', v' coordinates are displayed in the lower two fields. An alternative to selecting a color by clicking in the color chart is to enter coordinates into these fields. You can enter a color point in x, y coordinates, u', v' coordinates, or any combination of the two coordinate systems.

Figure 5-2. CIE Coordinates

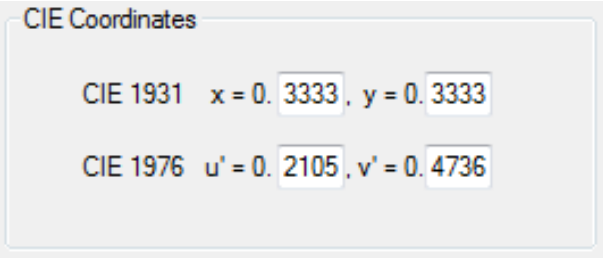

The Direct LED Control Mode is an alternative to specifying colors using CIE coordinates. This mode displays four slider controls, one for each LED on the CY3267 LED daughter board. Moving a slider from bottom to top causes the corresponding LED to light from 0% to 100% of its maximum rated flux. When the Direct LED Control Mode is enabled, all controls related to mixing colors are disabled. This includes the Requested Luminous Flux slider that sets the total flux of a given mixed color. These controls have no meaning when setting the individual LED flux levels manually.

Note CIE is the acronym for Commission internationale de l'éclairage or International Commission on Illumination.

Figure 5-3. Intelligent Lighting Control – Direct LED Control

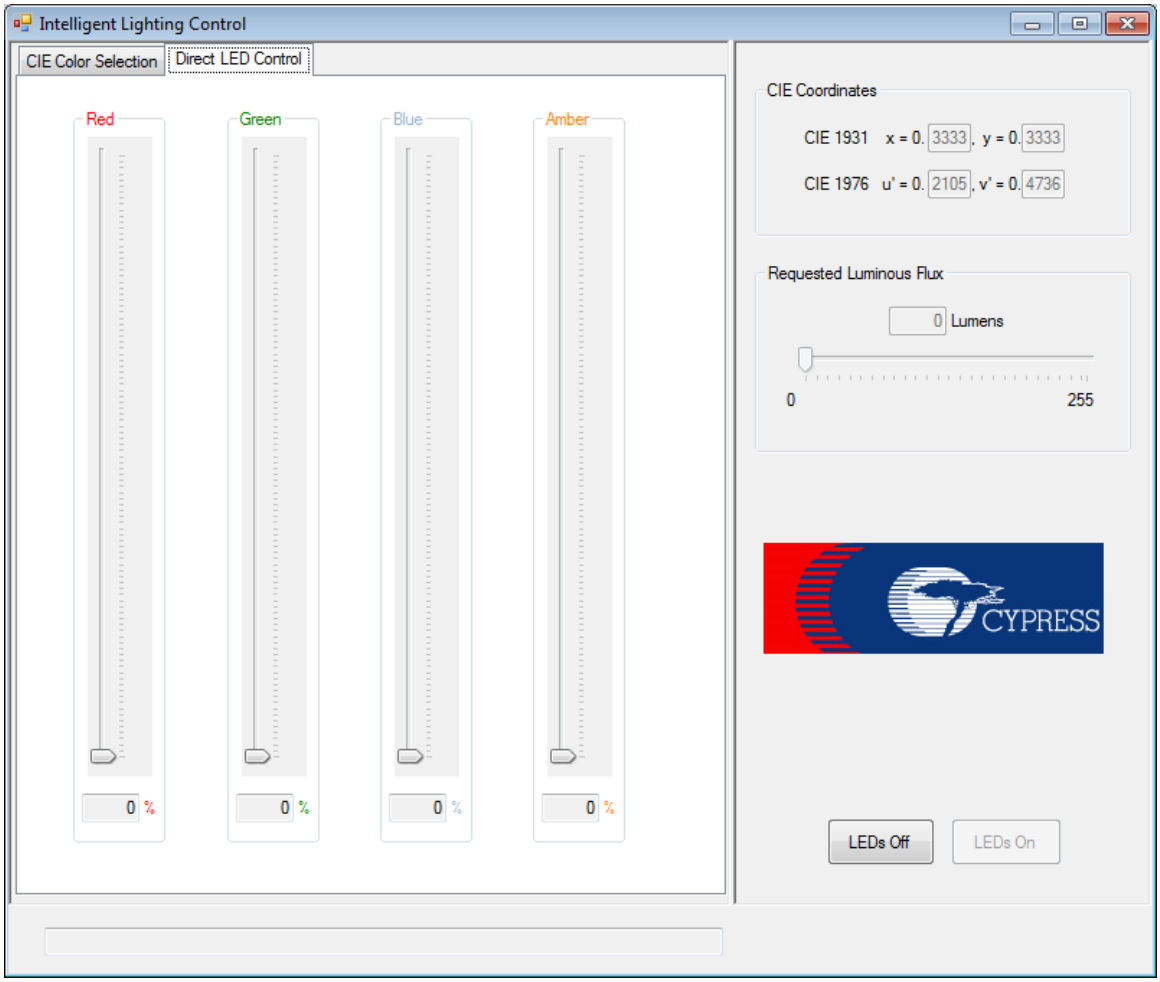

The application can also limit color choices to those that are produced by a black body radiator. A black body radiator is a theoretical, color-neutral object defined by Planck's Law. A black body radiator glows (radiates energy) at different colors as it is heated. When enabled, the black body curve is displayed on the CIE color chart. This curve marks the colors that correspond to the color of a black body radiator over a range of temperatures in Kelvin. The user selects the color temperature value by sliding the color temperature slider.

Color temperature (or correlated color temperature) is a common method of specifying the color of light in the white region. Disabling the color temperature control removes the black body curve from the color chart, disables the color temperature slider, and enables the controls used to specify mixed colors using the CIE color chart.

Figure 5-4. CIE Color Selection Tab - Color Temperature Control

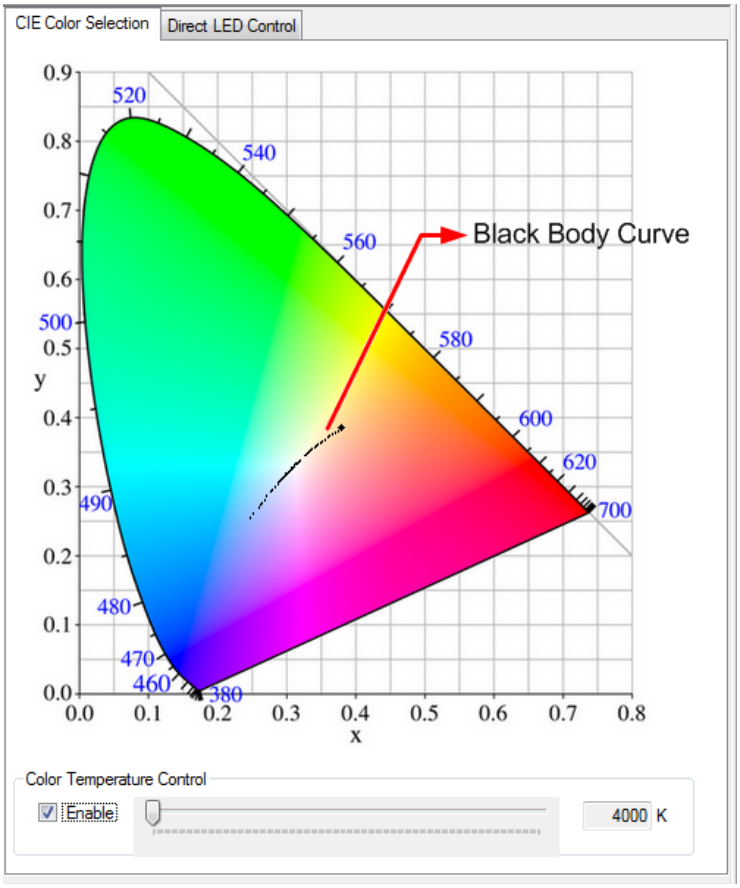

In addition to displaying colors, the application allows you to directly control the LEDs. The state of the LEDs (ON or OFF) is based on a closed loop between the application and the CY3267 Power EVK main board that determines the actual ON/OFF state. The ON/OFF buttons are located at the lower-right of the application's window. When the LEDs are off, the LEDs' ON button is enabled. Clicking on this button turns the LEDs on. If the LEDs are on, the OFF button is enabled; clicking on this button turns the LEDs off. Regardless of the setting, when the application is not connected to a board, the buttons change to show the actual state of the LEDs when the board is attached.

Figure 5-5. LEDs' ON/OFF Control

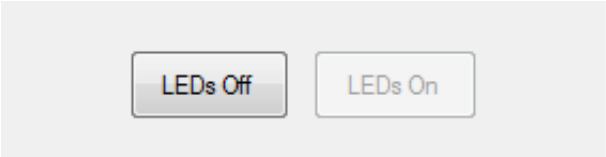

Below the tabbed window is a status window, which shows the current status of the connection between the application and the CY3267 Power EVK main board, and any error messages. If there is an error or change of status, a message appears describing the event. The message "I2C Bridge device found - Version 1.0" is displayed in the status window for approximately five seconds and is then cleared.

5.2 LED Luminous Flux

The luminous flux of the mixed color output can be varied using the Requested Luminous Flux slider located on the right side of the application window. The maximum total flux produced by the LEDs varies, depending upon the chosen color. For example, a neutral white can be set to a higher total flux than any of the four primary colors alone, because the color white is represented by a sum of the light output of each of the LEDs. The saturation point (or point of maximum total flux) differs for different colors. Moving the slider to a requested flux higher than the saturation point for a given color has no effect upon the light output of the LEDs, because they remain at that mixed color's saturation point. Note that this slider determines the requested luminous flux. This requested value is usually derated by the color-mixing firmware on the CY3267 Power EVK main board. This is required to perform temperature compensation, keeping the requested color as accurate as possible.

Figure 5-6. Luminous Flux

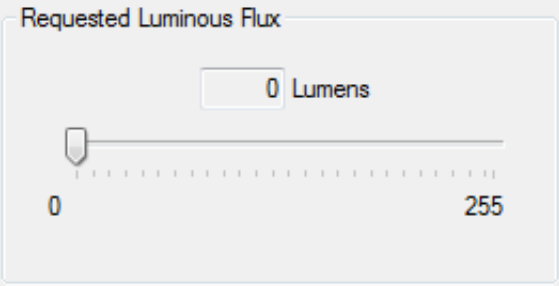

6. Code Examples

All code examples are available in the kit CD/DVD or in the following location: `<Install_Dir>\Cypress\CY3267 PowerPSoC\<version>\Firmware`.

6.1 Code Example: CY3267_PowerPSoC

6.1.1 Project Description

The CY3267 PowerPSoC Lighting EVK includes firmware that demonstrates the ability of PowerPSoC to drive multiple LED channels with color-mixing intelligence. The firmware also illustrates the use of PSoC Designer to design PowerPSoC-based systems and solutions.

The factory-installed code example implements the following elements with PowerPSoC:

- I^2C interface to communicate the desired color coordinates and intensity information
- 4-channel LED dimming using PrISM technology
- Hysteretic current control, with switching current thresholds configured by DAC settings
- Capacitive sensing buttons for ON/OFF and cycling of colors

6.1.2 Hardware Connections

Refer to the section Install Hardware on page 14.

6.1.2.1 Current Sense Amplifier (CSA)

The CSA consists of two amplifier stages. Stage 1 is used to level shift and amplify a high side input; stage 1 gain is fixed at ‘4’. Stage 2 is used to amplify the stage 1 output; stage 2 gain is fixed at ‘5’. As a result, the total gain is fixed and is equal to 20. The CSA controls the capacitance load at the output.

6.1.2.2 Precise Intensity Signal Modulation (PrISM)

PrISM compares the output of a pseudo-random counter with a signal density value. The comparator output asserts when the count value is less than or equal to the value in the signal density register.

6.1.2.3 *Hysteretic Controller (HYSTCTRL)*

The HYSTCTRL User Module is intended for use in LED applications as an intelligent controller for high-brightness LEDs. It provides cycle-by-cycle switch control with a fast transient response. The hysteretic controller simplifies system design because it does not require external compensation. The gate drivers are used to drive either internal or external power FETs.

Figure 6-1. Functional Blocks of CY3267_PowerPSoC

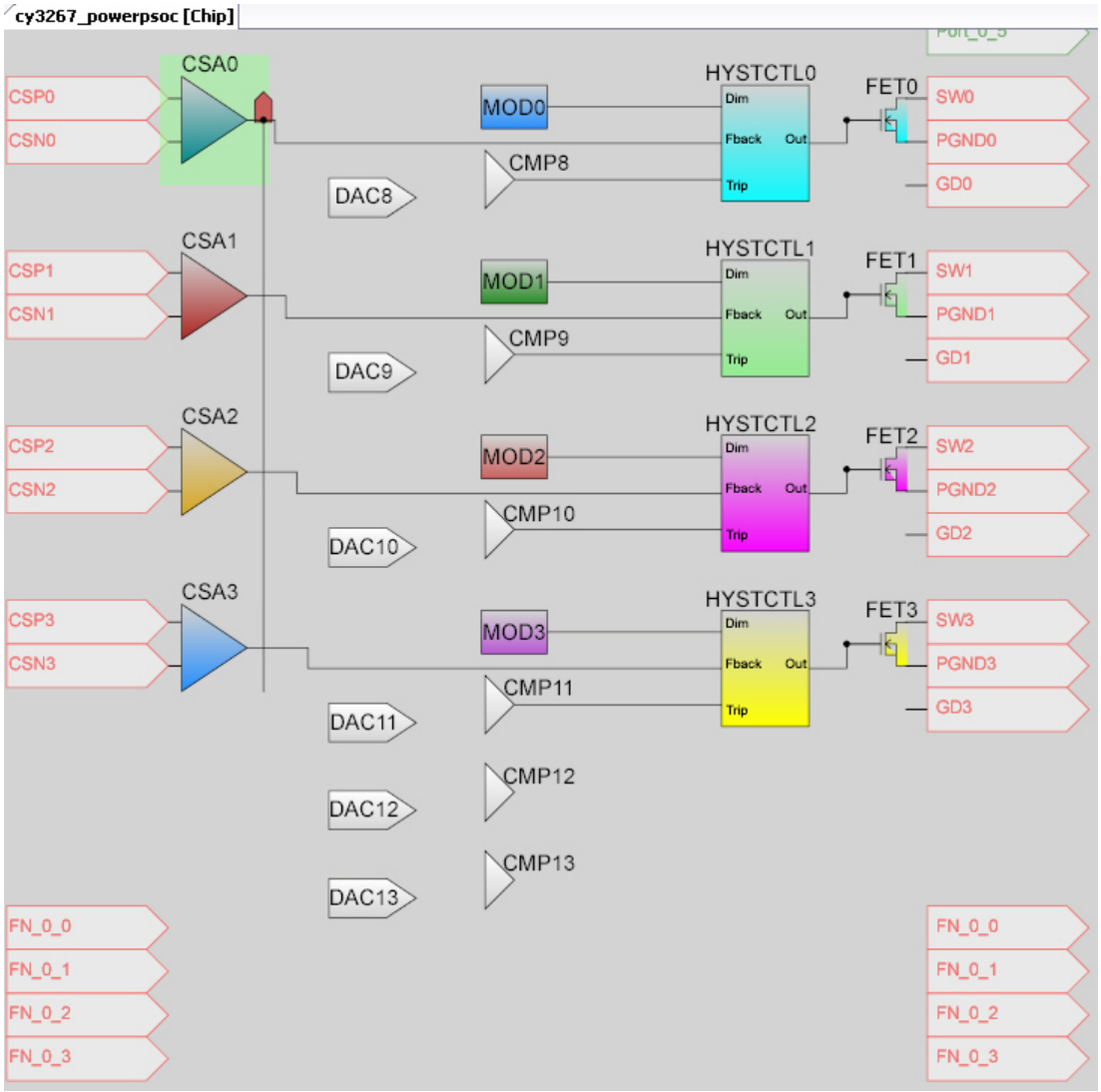

6.1.3 Program Flow Diagram

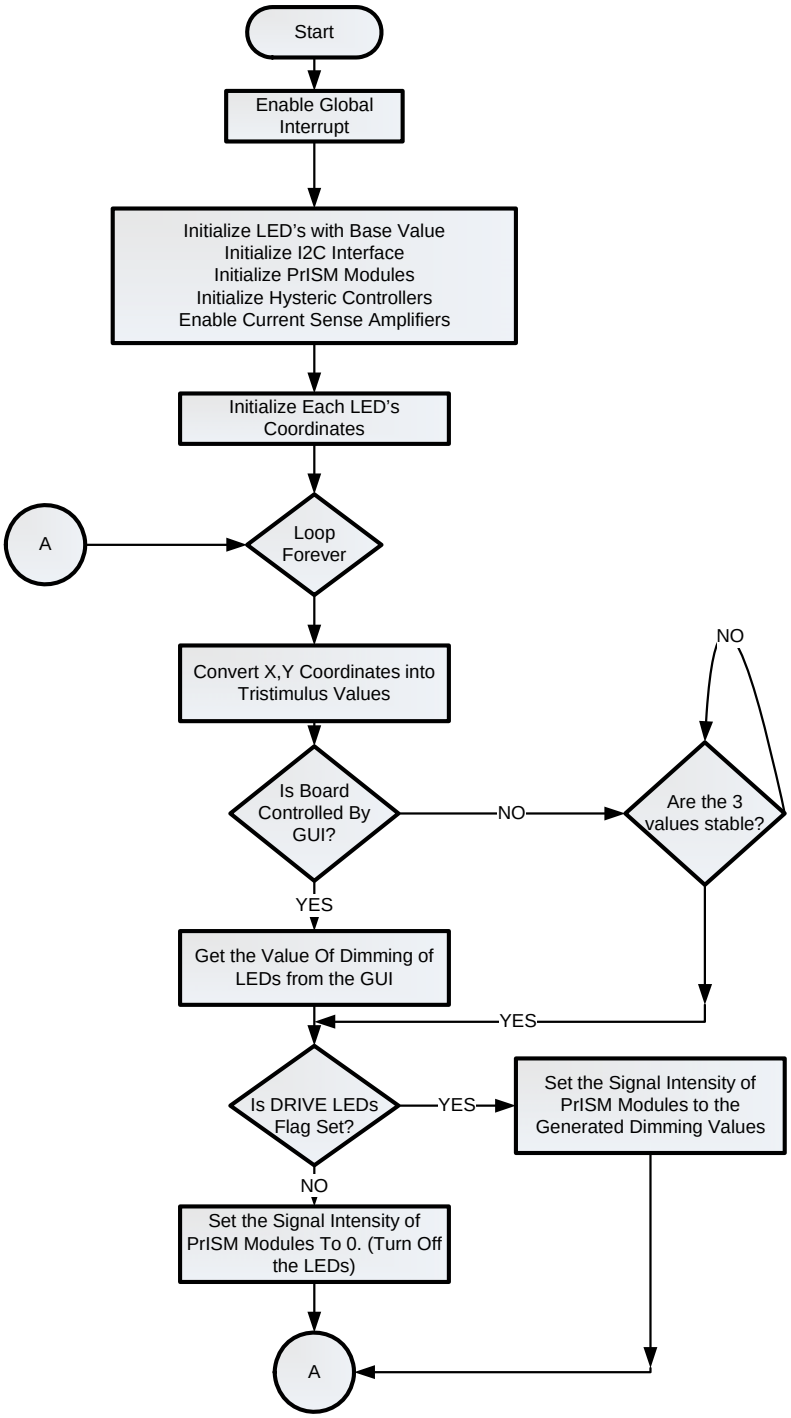

6.1.4 Verify Output

After the example code is built and programmed into the PowerPSoC device, you can control the HB LED on the daughter card by using the PC application or the CapSense buttons on the board.

A. Appendix

The schematics and board layouts are available in the kit CD/DVD or at the following location: `<Install_Directory>\Cypress\CY3267 PowerPSoC\<version>\Hardware`.

A.1 Schematics

A.1.1 CY3267 LED Daughter Board

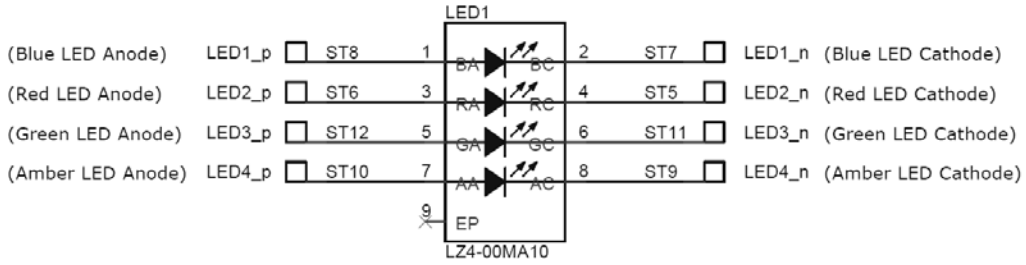

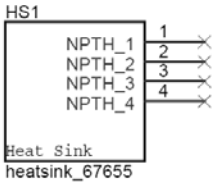



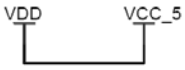

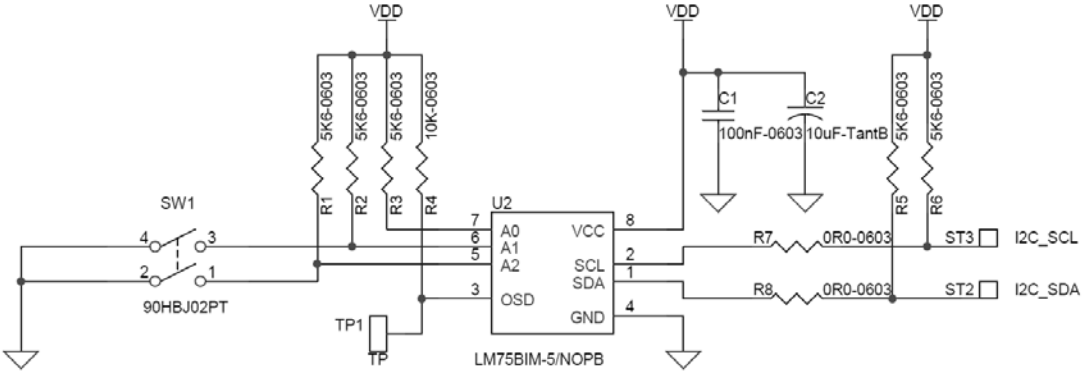

A.1.2 CY3267 Power EVK Main Board

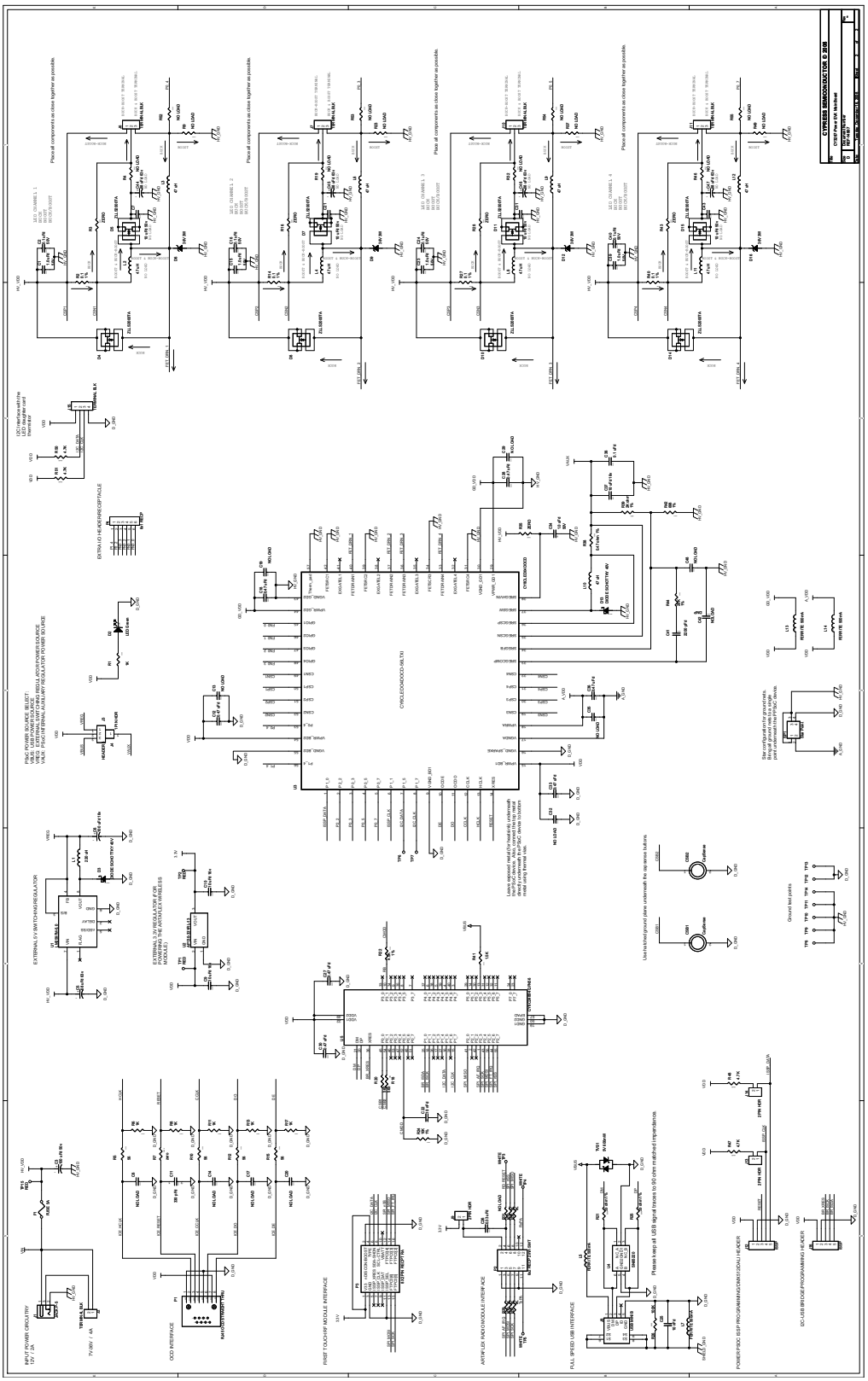

A.2 Bill of Materials

Qty	Reference	Mfr Part Number	Description	Manufacturer
5	C1,C15,C23,C34,C39	UMK107C5105KA-T	CAP CER 1.0UF 50V X5S 0603	Taiyo Yuden
4	C2,C16,C24,C40	ECJ-1VB1H104K	CAP CERAMIC .1UF 50V X7R 0603	Panasonic - ECG
1	C3	EEE-FK1H101P	CAP ELECT 100UF 50V FK SMD	Panasonic - ECG
1	C5	EEE-FK1J680UP	CAP ELECT 68UF 63V FK SMD	Panasonic - ECG
1	C6	EEE-FK1C101P	CAP ELECT 100UF 16V FK SMD	Panasonic - ECG
2	C9,C10	ECJ-3YB1C106K	CAP CERAMIC 10UF 16V X5R 1206	Panasonic - ECG
1	C11	ECJ-1VB2A331K	CAP 330PF 100V CERAMIC X7R 0603	Panasonic - ECG
7	C12,C18,C27,C28,C30, C33,C36	C1608Y5V1H474Z	CAP CER .47UF 50V Y5V 0603	TDK
2	C22,C25	04022R103K7B20D	CAP 10000PF 16V CERAMIC X7R 0402	Yageo America
1	C26	ECJ-2YB1C334K	CAP .33UF 16V CERAMIC X7R 0805	Panasonic - ECG
1	C37	ECJ-3YX1C106K	CAP CERAMIC 10UF 16V X7R 1206	Panasonic - ECG
1	C38	C0603C104J4RACTU	CAP .10UF 16V CERAMIC X7R 0603	Kemet
1	C41	ECJ-1VB1H222K	CAP CER 2200PF 50V 10% X7R 0603	Panasonic - ECG
1	D2	CMD15-21VGC/TR8	LED GREEN CLEAR 1206 SMD	Chicago Miniature Lamp, Inc
2	D3,D13	B0540W-7-F	DIODE SCHOTTKY 40V 500MA SOD123	Diodes Incorporated
4	D4,D8,D10,D14	ZLLS2000TA	DIODE SCHOTTKY 40V 2.2A SOT23-6	Zetex
4	D6,D9,D12,D16	1SMB5938BT3G	Diode Zener 3W 36V SMB	ON Semiconductor
1	F1	0154005.DR	FUSE BLOCK 5A FAST SMD	Littelfuse
1	J1	RAPC722X	CONN 2.1MM PWRJACK RT ANGLE PCB	Switchcraft
1	J2	1715250000	CONN TERM BLOCK PCB 5.0MM 2POS	Weidmuller
1	J3	3-641215-3	CONN HEADER VERT 3POS .100 30AU	AMP Division of TYCO
1	J4	9-146280-0-01	CONN HEADR BRKWAY .100 01POS STR	Tyco Electronics/Amp
4	J6,J7,J10,J11	1715260000	CONN TERM BLOCK PCB 5.0MM 3POS	Weidmuller
1	J8	1734035-2	CONN USB MINI B SMT RIGHT ANGLE	TYCO
3	J9,J13,J14	1-87215-0	CONN HEADER VERT 2POS .100 30AU	AMP Division of TYCO
2	J12,J16	22-23-2051	CONN HEADER 5POS 0.1 VERT KEYED	Molex
1	J15	999392	CONN TERM BLOCK PCB 5.0MM 4POS	Weidmuller
1	L1	LDS0705-221M-R	INDUCTOR SHIELDED 220.0UH SMD	Coiltronics
5	L3,L6,L9,L10,L12	DR74-470-R	INDUCTOR SHIELD PWR 47UH SMD	Coiltronics
4	L5,L7,L13,L14	MMZ1608S121A	FERRITE CHIP 120 OHM 500MA 0603 SMD	TDK Corporation
1	P1	557785-1	CONN MOD JACK 8-8 RT/A PCB 50AU	AMP
1	P2	DF11Z-12DS-2V(20)	CONN RECEPT 12POS 2mm SMD TIN	Hirose Electric Co. LTD.
1	P3	90152-2116	PC Board Connector, Dual Row, Right Angle 16 Circuits	Molex/Waldom Electronics Corp
1	P4	5-535541-4	CONN RECEPT 6POS .100 VERT GOLD	Tyco Electronics
11	R1,R6,R8,R11,R13,R17, R29,R30,R33,R34,R36	ERJ-3GEYJ102V	RES 1.0K OHM 1/16W 5% 0603 SMD	Panasonic - ECG
4	R2,R14,R27,R40	ERJ-8BWFR100V	RES .1 OHM 1/2W 1% 1206	Panasonic - ECG
5	R3,R16,R28,R35,R43	ERJ-8GEY0R00V	RES ZERO OHM 1/4W 5% 1206 SMD	Panasonic - ECG
4	R5,R10,R12,R15	ERJ-3GEYJ560V	RES 56 OHM 1/10W 5% 0603 SMD	Panasonic - ECG
1	R7	ERJ-3GEY0R00V	RES ZERO OHM 1/16W 5% 0603 SMD	Panasonic - ECG
2	R18,R20	ERJ-3GEYJ561V	RES 560 OHM 1/10W 5% 0603 SMD	Panasonic - ECG
2	R21,R25	ERJ-2RKF33R0X	RES 33.0 OHM 1/16W 1% 0402 SMD	Panasonic - ECG
1	R22	ERJ-3EKF4531V	RES 4.5K OHM 1/10W 1% 0603 SMD	Panasonic-ECG
1	R24	RC0603FR-0710KL	RES 10.0K OHM 1/16W 1% 0603 SMD	Yageo Corporation
1	R26	ERJ-2GEJ104X	RES 100K OHM 1/16W 5% 0402 SMD	Panasonic - ECG

Qty	Reference	Mfr Part Number	Description	Manufacturer
1	R38	ERJ-3RQFR47V	RESISTOR .47 OHM 1/10W 1% 0603	Panasonic - ECG
1	R39	ERJ-3EKF2001V	RES 2.00K OHM 1/10W 1% 0603 SMD	Panasonic - ECG
1	R41	ERJ-3GEYJ152V	RES 1.5K OHM 1/16W 5% 0603 SMD	Panasonic - ECG
1	R42	ERJ-3EKF6980V	RES 698 OHM 1/10W 1% 0603 SMD	Panasonic-ECG
1	R44	RC0603FR-0720KL	RES 20.0K OHM 1/16W 1% 0603 SMD	Yageo Corporation
4	R47,R48,R50,R51	RC0402JR-074K7L	RES 4.7K OHM 1/16W 5% 0402 SMD	Yageo Corporation
3	TP1,TP2,TP15	5000	TEST POINT 43 HOLE 65 PLATED RED	Keystone Electronics
5	TP3,TP4,TP5,TP6,TP7	5002	TEST POINT 43 HOLE 65 PLATED WHITE	Keystone Electronics
7	TP8,TP9,TP10,TP11,TP12,TP13,TP14	5001	TEST POINT 43 HOLE 65 PLATED BLACK	Keystone Electronics
1	U1	LM2597M-5.0/NOPB	IC REG SIMPLE SWITCHER 8-SOIC	National Semiconductor
1	U2	AP130-33YRL-13	IC REG LDO 300mA 3.3V SOT89R	Diodes Inc
1	U3	CY8CLED04DOCD-56LTXI	56QFN Power PSoC Device	Cypress Semiconductor
1	U5	CY8C24894-24LFXI	PSoC Mixed-Signal Array	Cypress Semiconductor
4	NA	1902E	STANDOFF HEX FLA-RET 4-40 1.000"	Keystone Electronics
4	NA	NY PMS 440 0038 PH	SCREW MACH PHIL 4-40X3/8 NYLON	Keystone Electronics
1	NA	151-8030-E	SHUNT GOLD W/HANDLE, BLACK	Kobiconn
No Install Components				
10	C8,C13,C14,C17,C19,C20,C29,C32,C35,C48	NA	CAP NO LOAD 0603	NA
1	C42	NA	CAP 0402 NO LOAD	NA
4	C7,C21,C31,C43	ECJ-4YF1H106Z	CAP 10UF 50V CERAMIC Y5V 1210	Panasonic - ECG
4	C44,C45,C46,C47	EEE-FK1J680UP	CAP ELECT 68UF 63V FK SMD	Panasonic - ECG
8	R4,R9,R19,R23,R32,R37,R46,R49	NA	RES NO LOAD 1206 SMD	NA
5	R31,R52,R53,R54,R55	NA	RES NO LOAD 0603 SMD	NA
1	TVS1	SMBJ5.0CA	TVS 5.0 VOLT 600 WATT BI-DIR SMB	Littelfuse Inc
1	U4	SN65220DBV	IC SINGLE USB PORT TVS SOT-23-6	Texas Instruments
8	D5,D7,D11,D15	ZLLS2000TA	DIODE SCHOTTKY 40V 2.2A SOT23-6	Zetex
4	L2,L4,L8,L11	DR74-470-R	INDUCTOR SHIELD PWR 47UH SMD	Coiltronics

A.3 Safety Precautions

A.3.1 General Safety Precautions

- Keep your work area clean. Ensure that there are no loose wires or metal pieces on the table or near high-power circuits.
- Always wear safety glasses when working with circuits at high power or high voltage.
- Use rubber floor mats to insulate you.
- Bracelets, rings, metal watch bands, and loose necklaces/pendants conduct electricity and can cause burns. Do not wear them near an energized circuit.
- Be aware of the locations of fire extinguishers and first-aid kits in the lab and around your work area.
- Use only isolated power supplies (isolated or AC power through isolation power transformers).
- Before powering your circuit, verify that all connections are according to the board schematic. Ensure that there are no shorts or ground loops that may lead to electrical shocks or that may damage the test equipment.

A.3.2 Precautions when Working with PowerPSoC-based High-Power Circuits

- When building your own system with the CY3267 PowerPSoC Lighting EVK for the first time, begin with low current settings (preferably 50 mA). Set the DAC thresholds in the PowerPSoC hysteretic controller accordingly. After the system functions as desired at this current setting, increase the hysteretic controller's DAC thresholds in steady increments to the final value. At each increment, verify that the components on the board are not excessively hot.
- Ensure that the high-side DAC reference and the low-side DAC reference differ by a count of at least four. For example, if the low-side DAC reference is set to 85 (decimal representation), the high-side DAC reference should be set to at least 89.
- Follow the FET Turn-On sequence suggested in the code example. Altering this sequence may damage the PowerPSoC's internal FETs.