CY3242-IOXlite

# I²C Port Expander Lite Demo Kit Guide

Cypress Semiconductor
198 Champion Court
San Jose, CA 95134-1709
Phone (USA): 880.858.1810
Phone (Intnl): 408.943.2600
http://www.cypress.com

Copyright © 2007 Cypress Semiconductor Corporation. All rights reserved.

PSoC® is a registered trademark and PSoC Designer™, Programmable System-on-Chip™, and PSoC Express™ are trademarks of Cypress Semiconductor Corporation (Cypress), along with Cypress® and Cypress Semiconductor™. All other trademarks or registered trademarks referenced herein are the property of their respective owners.

Throughout this document I2C, IIC and $I^2C$ are used interchangeably to represent the I2C Communication Protocol trademarked by Philips. Purchase of I2C components from Cypress or one of its sublicensed Associated Companies conveys a license under the Philips I2C Patent Rights to use these components in an I2C system, provided that the system conforms to the I2C Standard Specification as defined by Philips.

The information in this document is subject to change without notice and should not be construed as a commitment by Cypress. While reasonable precautions have been taken, Cypress assumes no responsibility for any errors that may appear in this document. No part of this document may be copied or reproduced in any form or by any means without the prior written consent of Cypress. Made in the U.S.A.

## Disclaimer

CYPRESS MAKES NO WARRANTY OF ANY KIND, EXPRESS OR IMPLIED, WITH REGARD TO THIS MATERIAL, INCLUDING, BUT NOT LIMITED TO, THE IMPLIED WARRANTIES OF MERCHANTABILITY AND FITNESS FOR A PARTICULAR PURPOSE. Cypress reserves the right to make changes without further notice to the materials described herein. Cypress does not assume any liability arising out of the application or use of any product or circuit described herein. Cypress does not authorize its products for use as critical components in life-support systems where a malfunction or failure may reasonably be expected to result in significant injury to the user. The inclusion of Cypress's product in a life-support systems application implies that the manufacturer assumes all risk of such use and in doing so indemnifies Cypress against all charges.

## Flash Code Protection

Cypress products meet the specifications contained in their particular Cypress PSoC Data Sheets. Cypress believes that its family of PSoC products is one of the most secure families of its kind on the market today, regardless of how they are used. There may be methods, unknown to Cypress, that can breach the code protection features. Any of these methods, to our knowledge, would be dishonest and possibly illegal. Neither Cypress nor any other semiconductor manufacturer can guarantee the security of their code. Code protection does not mean that we are guaranteeing the product as "unbreakable."

Cypress is willing to work with the customer who is concerned about the integrity of their code. Code protection is constantly evolving. We at Cypress are committed to continuously improving the code protection features of our products.

# Contents

**Using the I2C Port Expander Demonstration Kit ..... 5**

**1. Board Specifications and Component Location ..... 5**

1.1 Board Specifications ..... 5

1.2 Components Location ..... 6

**2. Jumper Settings and Connector Descriptions ..... 6**

2.1 J1 Speaker Enable Jumper ..... 6

2.2 J2 - J9 Address Selection Jumpers ..... 6

2.3 J10 Interrupt Selection Jumper ..... 6

2.4 J11 - External I2C Interface ..... 7

2.5 J12 USB Connector ..... 7

2.6 J13 I2C-USB Bridge ISSP Connector ..... 7

2.7 J14 Power Source Selection Jumper ..... 7

2.8 J15 DC Adapter Plug Connector ..... 7

2.9 SW2 I2C Bus Select Switch ..... 7

**3. I2C Port Expander Address Selection Jumpers ..... 7**

3.1 J2 - A3 Pin Mode ..... 7

3.2 J3 - A3 High/Low Select ..... 7

3.3 J4 - A2 Pin Mode ..... 8

3.4 J5 - A2 High/Low Select ..... 8

3.5 J6 - A1 Pin Mode ..... 8

3.6 J7 - A1 High/Low Select ..... 8

3.7 J8 - A0 High/Low Select ..... 8

3.8 J9 - A0 Pin Mode ..... 8

3.9 Setting the I2C Port Expander Address ..... 8

**4. I2C Port Expander Address Select Examples ..... 9**

4.1 I2C Port Expander Address Example 1 ..... 9

4.2 I2C Port Expander Address Example 2 ..... 9

4.3 I2C Port Expander Address Example 3. ..... 10

**5. Demonstration Example Scripts ..... 11**

5.1 Script 1 ..... 11

5.2 Script 2 ..... 11

**6. I2C Port Expander Board Schematics ..... 12**

# Using the I2C Port Expander Demonstration Kit

Associated Project: Yes

Associated Part Family: CY8C9520A

Software Version: PSoC Designer™ V4.3

Associated Application Notes and Kits: AN2352, CY3242-IOX, and CY3240-I2USB

## 1. Board Specifications and Component Location

### 1.1 Board Specifications

| Feature | Description |
|---|---|
| Number of Port Expander Devices | 1 |
| Device Part Number | CY8C9520A |
| Communication Interface | I2C |
| Power Sources | DC Adapter 7-14V 0.3A, 3.3V to 5V from External I2C, USB Cable 5V |
| Maximum Power Consumption | 5V 200 mA, 3.3V - 150 mA |
| Device Power Consumption | 5V 28 mA, 3.3V - 16 mA |
| Board Size | 3.5x3.5 inches (89x89 mm) |
| Additional Features | Speaker, Eight DIP switch inputs, Integrated I2C-USB Bridge circuit or external I2C interface, 12 LED indicators, Reset switch, and Address selection jumpers. |

## 1.2 Components Location

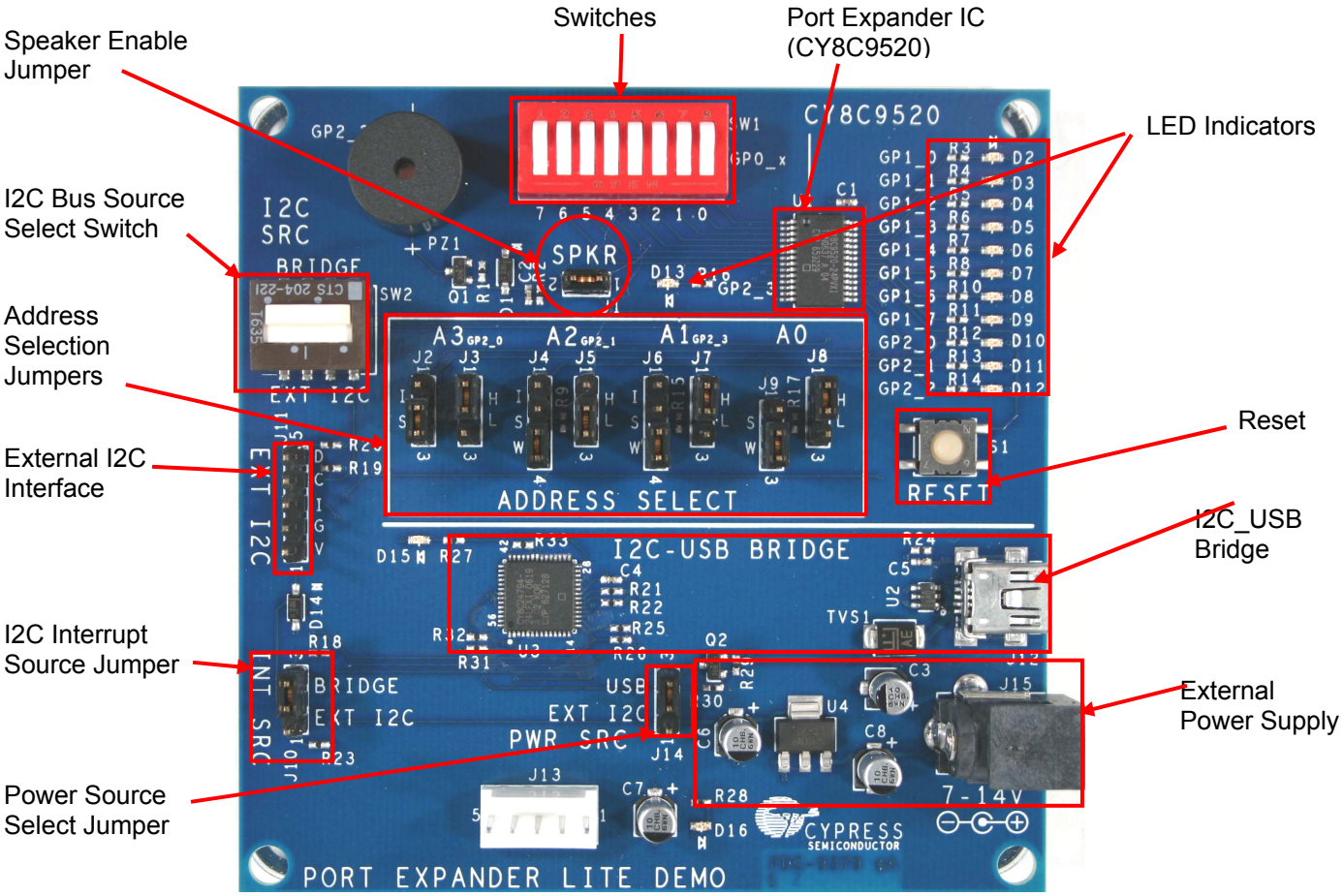


# 2. Jumper Settings and Connector Descriptions

## 2.1 J1 Speaker Enable Jumper

Open - Speaker is disconnected from the I/O Expander pin.

Closed - Expander pin GP2_2 is connected to the speaker driver circuit.

## 2.2 J2 - J9 Address Selection Jumpers

See description below for details about port expander address selection.

## 2.3 J10 Interrupt Selection Jumper

Open – U1 interrupt pin is disconnected from I2C interrupt line.

Closed 1, 2 – U1 interrupt pin is connected to the External I2C interrupt line.

Closed 2, 3 – U1 interrupt pin is connected to the I2C-USB Bridge interrupt line.

## 2.4 J11 - External I2C Interface

| 1 | 2 | 3 | 4 | 5 |
|---|---|---|---|---|
| VCC | GND | Interrupt | Clock | Data |

## 2.5 J12 USB Connector

Connects the I2C-USB Bridge circuit to the USB port for configuration and data collection.

## 2.6 J13 I2C-USB Bridge ISSP Connector

Used for reprogramming the I2C-USB Bridge circuit's firmware.

## 2.7 J14 Power Source Selection Jumper

Closed 2, 3 – Board is powered from the USB cable (default).

Closed 1, 2 – Board is powered from external DC power supply using the internal regulator.

## 2.8 J15 DC Adapter Plug Connector

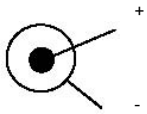


DC 7-14 0.3A

## 2.9 SW2 I2C Bus Select Switch

Connects the I/O Expander's I2C bus to either the I2C-USB Bridge circuit, or to the External I2C Connector (J11).

# 3. I2C Port Expander Address Selection Jumpers

The I2C Port Expander board allows the user to select the address used for the expander device. You must configure every device on the same I2C bus to an individual I2C address. For I2C address configuration, use the address selection jumpers J2 – J9. Each address line has two jumpers associated with it, a Mode jumper and a High/Low jumper. The Mode jumper allows the pin to be connected to a LED for the I/O function (position I), as a Strong address pin (S), or as a Weak address pin (W). The High/Low jumper has no effect if the Mode jumper is in the I/O position. If the Mode jumper is in one of the address positions, the High/Low jumper determines if the address pin is pulled High (H) or Low (L).

Only the first four address pins, A0 through A3, are available for use as addresses on this demonstration board.

## 3.1 J2 - A3 Pin Mode

1-2 (I): I/O mode (default)

2-3 (S): Strong Address

## 3.2 J3 - A3 High/Low Select

1-2 (H): Pull up (default)

2-3 (L): Pull down

## 3.3 J4 - A2 Pin Mode

1-2 (I): I/O mode (default)

2-3 (S): Strong Address

3-4 (W): Weak Address

## 3.4 J5 - A2 High/Low Select

1-2 (H): Pull up (default)

2-3 (L): Pull down

## 3.5 J6 - A1 Pin Mode

1-2 (I): I/O mode (default)

2-3 (S): Strong Address

3-4 (W): Weak Address

## 3.6 J7 - A1 High/Low Select

1-2 (H): Pull up (default)

2-3 (L): Pull down

## 3.7 J8 - A0 High/Low Select

1-2 (H): Pull up (default)

2-3 (L): Pull down

## 3.8 J9 - A0 Pin Mode

1-2 (S): Strong Address (default)

2-3 (W): Weak Address

## 3.9 Setting the I2C Port Expander Address

Use the A0 line to define the corresponding bit of the I2C address. Pull this pin up or down. If A0 is a strong pull up or a strong pull down (connected through 330 ohms or less, to Vdd or Vss), then that is the only address line specified and the A1-A6 lines are used as GPIO. If A0 is a weak pull up or a weak pull down (connected to Vdd or Vss through 75 - 200-kohm resistor), then A0 is not the only externally defined address bit.

There is a pin assigned to be A1 if it is needed. Pull this pin up or down, strong or weak with a resistor if it is going to be used for address selection. As with A0, the type of pull determines whether the address bit is the last externally defined address bit. Different from A0, A1 is not dedicated as an address pin. It is only used if A0 is not the only address bit externally defined. There are also predefined pins for A2, A3, A4, A5 and A6 that are only used for addressing if they are needed. The last address bit in the chain is pulled strong. That way, only the number of pins needed to assign the address desired for the part are allocated as address pins; and any pins not used for address bits are available for use as GPIO pins. The table, “Device Addressing,” on page 3 of the I2C Port Expander Data Sheet defines the resulting device I2C address.

# 4. I2C Port Expander Address Select Examples

## 4.1 I2C Port Expander Address Example 1

To set the I2C address to 0x40 (0100000), set A0 to Strong Pull Down using jumpers J8 and J9. The other address pins are made available for use as GPIO by placing J2, J4 and J6 to the I (I/O) position. The resulting I2C address is:

| A6 | A5 | A4 | A3 | A2 | A1 | A0 | N/A[a] | Expander Address Pins |
|---|---|---|---|---|---|---|---|---|
| 7 | 6 | 5 | 4 | 3 | 2 | 1 | 0 | I2C Address Bits |
| 0 | 1 | 0 | 0 | 0 | 0 | 0 | 0 | Bit Value |
| N/A | N/A | N/A | J2 = I | J4 = I | J6 = I | J9 = S<br>J8 = L | N/A | Jumper Setting |

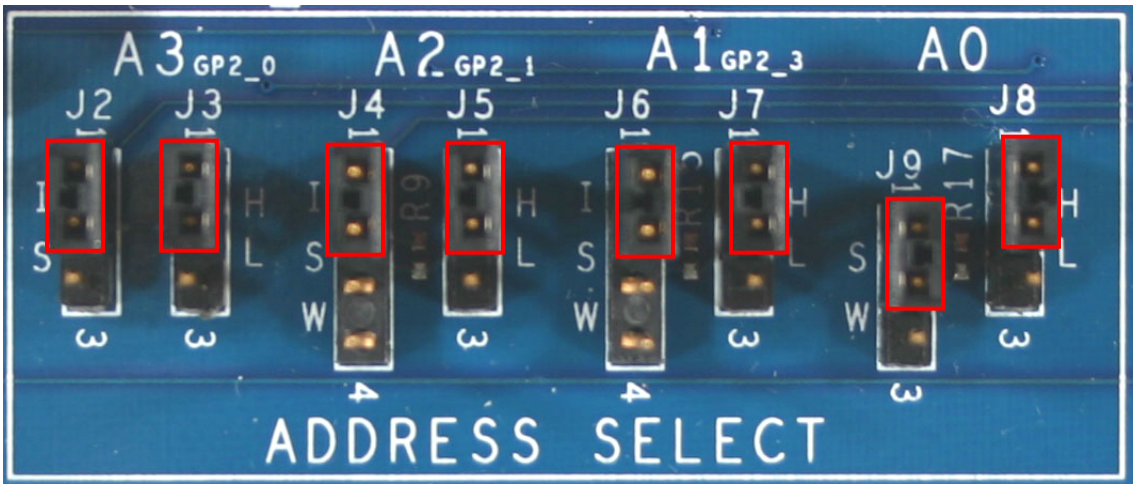


I2C address is set to 0x42.

## 4.2 I2C Port Expander Address Example 2

To set the I2C address to 0x46 (0100110), set A0 to Weak Pull Down, A1 to Weak Pull Up, and A2 to Weak Pull Down. A3 is still available for use as GPIO. The resulting I2C address is:

| A6 | A5 | A4 | A3 | A2 | A1 | A0 | N/A | Expander Address Pins |
|---|---|---|---|---|---|---|---|---|
| 7 | 6 | 5 | 4 | 3 | 2 | 1 | 0 | I2C Address Bits |
| 0 | 1 | 0 | 0 | 0 | 0 | 0 | 0 | Bit Value |
| N/A | N/A | N/A | J2 = I | J4 = S<br>J5 = H | J6 = W<br>J7 = H | J9 = W<br>J8 = L | N/A | Jumper Setting |

[a] This position represents the R/W bit.

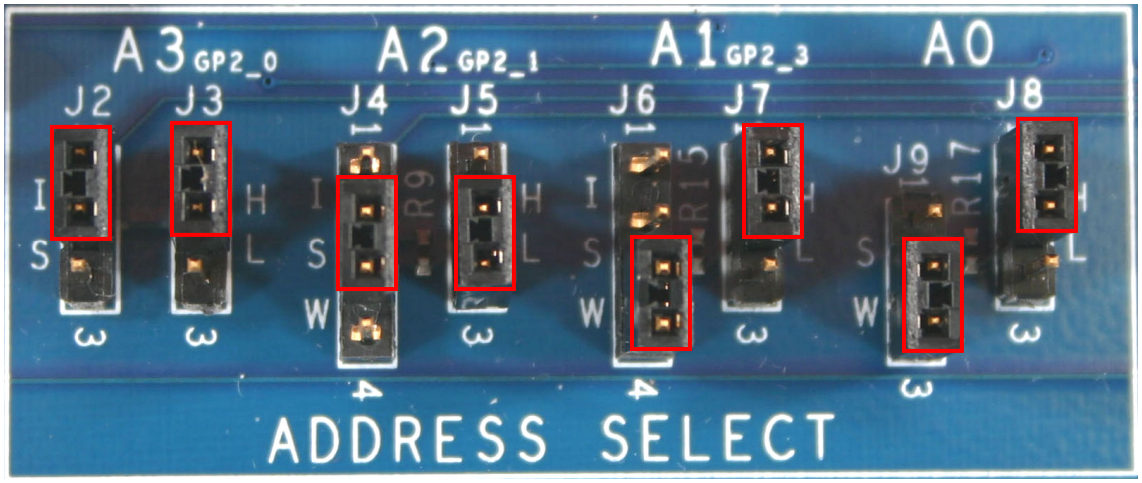


I2C address is set to 0x46.

## 4.3 I2C Port Expander Address Example 3.

To set the I2C address to 0x56 (0101110), set A0 to Weak Pull Down, A1 to Weak Pull Up, A2 to Weak Pull Down, and A3 to Strong Pull Up. The resulting I2C address is:

| A6 | A5 | A4 | A3 | A2 | A1 | A0 | N/A | Expander Address Pins |
|---|---|---|---|---|---|---|---|---|
| 7 | 6 | 5 | 4 | 3 | 2 | 1 | 0 | I2C Address Bits |
| 0 | 1 | 0 | 0 | 0 | 0 | 0 | 0 | Bit Value |
| N/A | N/A | N/A | J2 = S<br>J3 = H | J4 = W<br>J5 = L | J6 = W<br>J7 = H | J9 = W<br>J8 = H | N/A | Jumper Setting |

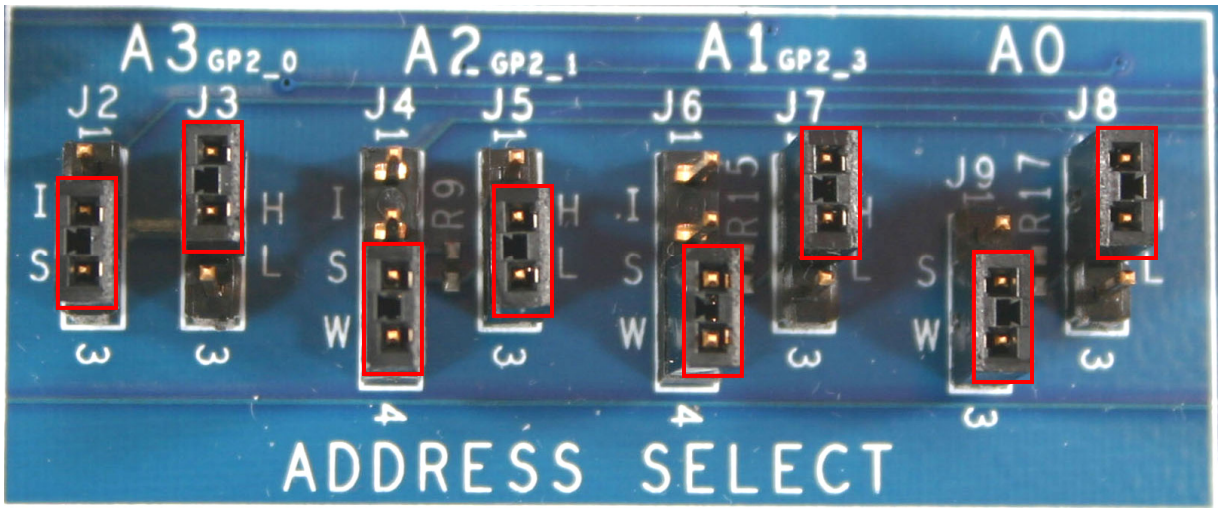


I$^2$C address is set to 0x56.

# 5. Demonstration Example Scripts

## 5.1 Script 1

1 kHz tone to speaker. Address is 0x42. Install Jumper J1.

```
s42 28 03 04 25 10 3          ;select and configuring PWM
s42 0A FF                     ;select output port register
s42 18 02                     ;select the Gport to be configured
s42 1c 00                     ;configure port as output
s42 1a FF                     ;allow port to PWM output
s42 21 FF                     ;select strong drive
```

## 5.2 Script 2

Read switches states. Address is 0x42.

```
;Set up Port 0 to read switches
s42 08 00                     ;Write to port 0 zeros
s42 18 00                     ;select the Gport to be configured
s42 1c ff                     ;Set the port direction to input
s42 1e ff                     ;select Resistive pull Down drive
s42 00                        ;start reading
s43 x                         ;repeat this line for continuously reading button
state
```

See the I2C Port Expander Data Sheet for more configuration details.

# 6. I2C Port Expander Board Schematics

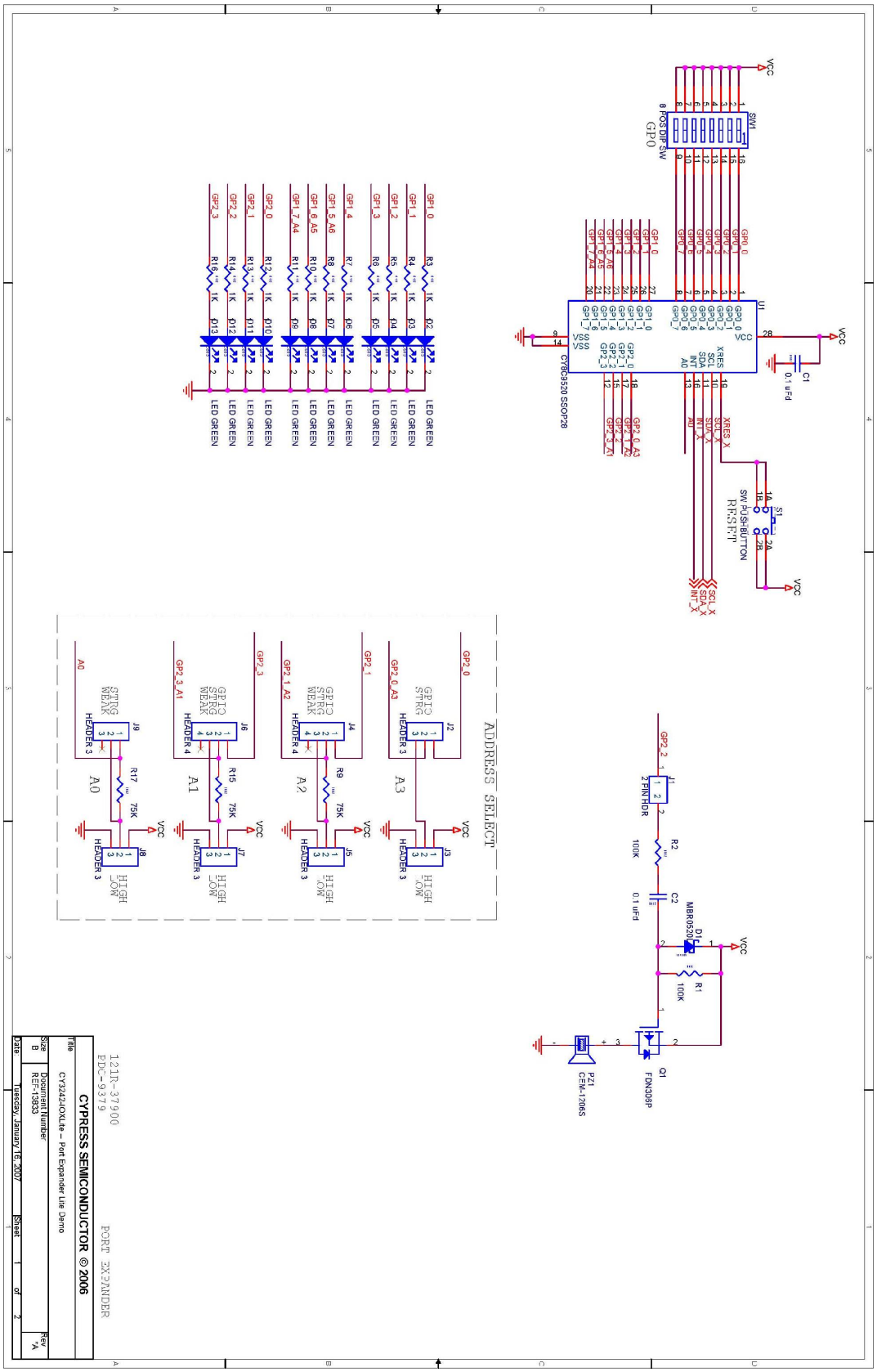

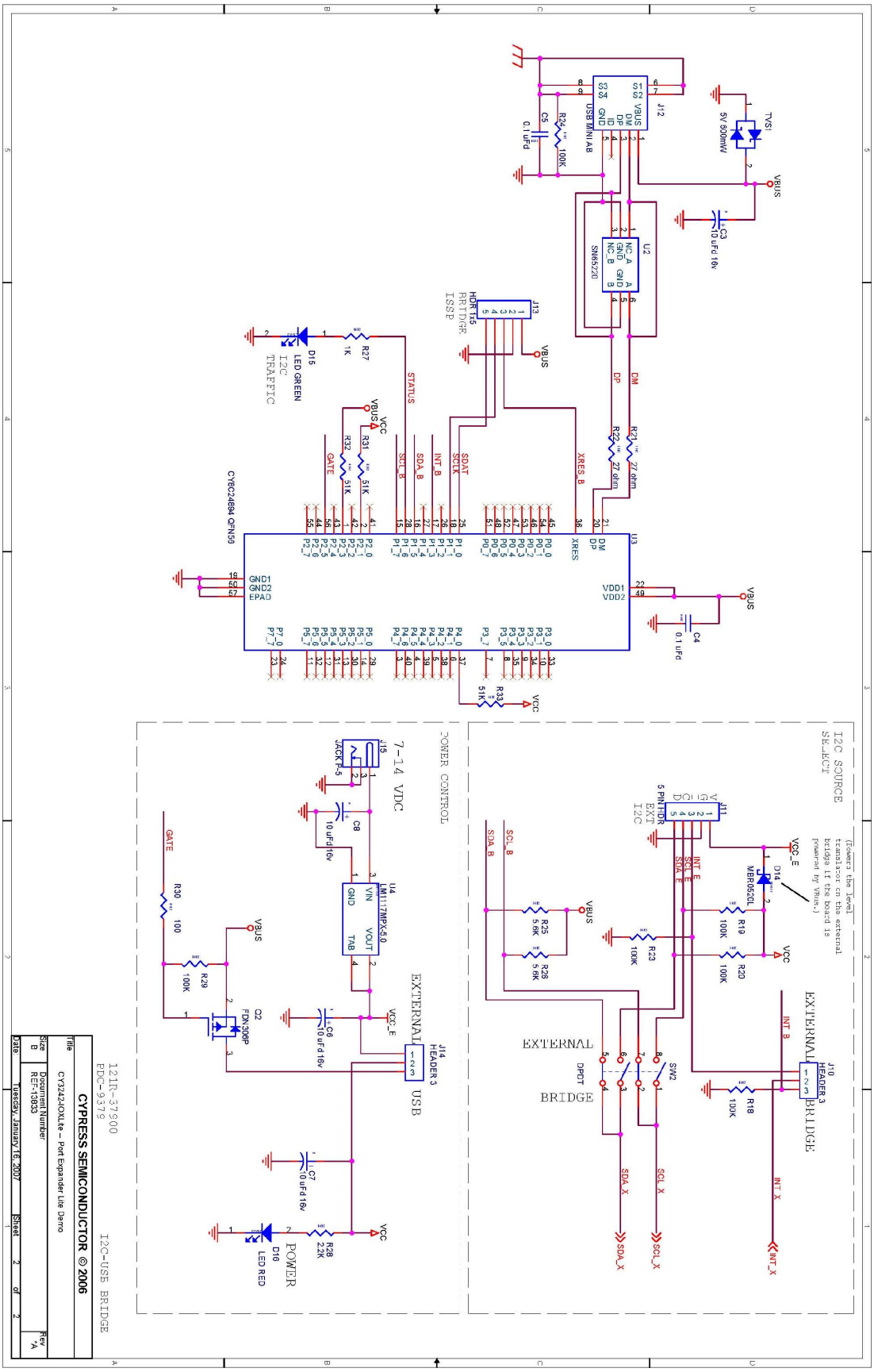
CYPRESS SEMICONDUCTOR © 2006
CY3242-IOXLite – Port Expander Lite Demo
Document Number: REF-13833
Tuesday, January 16, 2007
I2C-USB BRIDGE
I2C SOURCE SELECT
EXTERNAL BRIDGE
POWER CONTROL
7-14 VDC
EXTERNAL USB
POWER
I2C TRAFFIC
BRIDGE ISSP
CY8C24894 QFN56
SN65220
USB MINI AB
LED GREEN
LED RED
MBR052CL
FDN306P
LM1117MPX-5.0
JACK P-5
HEADER 3
5V 500mW
TVS1
VBUS
VCC
VCC_E
GATE
STATUS
SDA_B
SCL_B
INT_B
SDAT
SCLK
XRES_B
DP
DM
SDA_X
SCL_X
INT_X
SW2
DPDT
J10
J11
J12
J13
J14
J15
U2
U3
U4
D14
D15
D16
Q2
C3
C4
C5
C6
C7
C8
R18
R19
R20
R23
R24
R25
R26
R27
R28
R29
R30
R31
R32
R33
R21
R22
R33
100K
51K
1K
27 ohm
0.1 uFd
10 uFd 16v
100
2.2K
5.6K
5 PIN HDR
EXT I2C
(Powers the level translator on the external bridge if the board is powered by VBUS.)
121R-37900
PDC-9379
Title
Size B
Rev A
Date
Sheet 2 of 2