CY3218-CAPEXP1 CapSense® Express™ Evaluation Kit Guide

Doc. # 001-54702 Rev. *D

Cypress Semiconductor
198 Champion Court
San Jose, CA 95134-1709

Phone (USA): 800.858.1810
Phone (Intnl): 408.943.2600
http://www.cypress.com

Copyrights

© Cypress Semiconductor Corporation, 2011-2015. The information contained herein is subject to change without notice. Cypress Semiconductor Corporation assumes no responsibility for the use of any circuitry other than circuitry embodied in a Cypress product. Nor does it convey or imply any license under patent or other rights. Cypress products are not warranted nor intended to be used for medical, life support, life saving, critical control or safety applications, unless pursuant to an express written agreement with Cypress. Furthermore, Cypress does not authorize its products for use as critical components in life-support systems where a malfunction or failure may reasonably be expected to result in significant injury to the user. The inclusion of Cypress products in life-support systems application implies that the manufacturer assumes all risk of such use and in doing so indemnifies Cypress against all charges.

Any Source Code (software and/or firmware) is owned by Cypress Semiconductor Corporation (Cypress) and is protected by and subject to worldwide patent protection (United States and foreign), United States copyright laws and international treaty provisions. Cypress hereby grants to licensee a personal, non-exclusive, non-transferable license to copy, use, modify, create derivative works of, and compile the Cypress Source Code and derivative works for the sole purpose of creating custom software and or firmware in support of licensee product to be used only in conjunction with a Cypress integrated circuit as specified in the applicable agreement. Any reproduction, modification, translation, compilation, or representation of this Source Code except as specified above is prohibited without the express written permission of Cypress.

Disclaimer: CYPRESS MAKES NO WARRANTY OF ANY KIND, EXPRESS OR IMPLIED, WITH REGARD TO THIS MATERIAL, INCLUDING, BUT NOT LIMITED TO, THE IMPLIED WARRANTIES OF MERCHANTABILITY AND FITNESS FOR A PARTICULAR PURPOSE. Cypress reserves the right to make changes without further notice to the materials described herein. Cypress does not assume any liability arising out of the application or use of any product or circuit described herein. Cypress does not authorize its products for use as critical components in life-support systems where a malfunction or failure may reasonably be expected to result in significant injury to the user. The inclusion of Cypress' product in a life-support systems application implies that the manufacturer assumes all risk of such use and in doing so indemnifies Cypress against all charges.

Use may be limited by and subject to the applicable Cypress software license agreement.

PSoC Designer and CapSense Express are trademarks and PSoC and CapSense are registered trademarks of Cypress Semiconductor Corp. All other trademarks or registered trademarks referenced herein are property of the respective corporations.

Contents

1. Introduction **5**

1.1 Overview 5
1.2 Kit Contents 5
1.3 Default Jumper Settings 5
1.4 Additional Resources 6
1.5 Documentation Conventions 6

2. Getting Started **7**

2.1 Hardware 7
2.1.1 Power Supply System 8
2.1.2 Mechanical and CapSense Buttons 9
2.1.3 CapSense Controller 9
2.1.4 I2C Interface 10

3. Installation **11**

3.1 Install Hardware 11
3.2 Install Software 11
3.2.1 Before You Begin 11
3.2.2 Installing Software 11

4. Create Project with CY3218-CAPEXP1 **21**

4.1 Functional Description 21
4.2 Create New Project 21
4.3 Configure the Driver 25
4.4 Configure Button and LED Behavior 25
4.5 Pin Assignment 31
4.6 Verify Output 33

5. Tune CY3218-CAPEXP1 **34**

5.1 Monitor CapSense Signal 34
5.2 Tune Buttons 35

6. Technical References **37**

6.1 CY3218-CAPEXP1 Kit Schematic 37
6.1.1 Schematic Page 1 37
6.1.2 Schematic Page 2 38
6.1.3 Schematic Page 3 38
6.1.4 Schematic Page 4 39
6.2 CY3218-CAPEXP1 Board Layout 40
6.2.1 PDCR-9458 Top Layer 40
6.2.2 PDCR-9458 Bottom Layer 41

6.2.3 PDCR-9458 Top Silk Screen 41
6.2.4 PDCR-9458 Bottom Silk Screen 42
6.3 CY3218-CAPEXP1 Bill of Material (BOM) 43
6.4 CY3218-CAPEXP1 Pin Assignment 44

Revision History **45**
Document Revision History 45

1. Introduction

1.1 Overview

The CY3218-CAPEXP1 CapSense® Express™ Evaluation Kit is used to evaluate the CapSense Express device. This kit demonstrates the following features: CapSense buttons, LED drive, digital input, and I2C. The CapSense Express device is configured via a system-level project in PSoC® Designer™. A 16-pin QFN CY8C20110 device is mounted on the board. The board is powered with a AAA battery. A boost converter converts the input, in the range of 1.1 V to 1.5 V, to the device operating voltage of 3.3 V. The board can also be powered using the CY3240-I2USB bridge connected to the I2C header.

1.2 Kit Contents

The CY3218-CAPEXP1 CapSense Express Evaluation Kit includes:

- CY3218-CAPEXP1 CapSense Express Evaluation Board
- USB A to Mini-B cable
- AAA battery
- 1 mm acrylic overlay
- Quick Start Guide
- Kit CD, which includes
  - PSoC Designer IDE
  - Bridge Control Panel software
  - CapSense Express datasheets
  - Kit release notes
  - Kit user guide
  - Software release notes
  - Code example documentation
  - Hardware design files
  - Sample silicon CY8C20110-LDX2I (5 numbers)

1.3 Default Jumper Settings

Jumper (J2) on the CY3218-CAPEXP1 CapSense Express Evaluation Kit board configures the power setting for the board.

- Default position for J2: Jumper on pin 1 and 2; this enables powering the board via the CY3240-I2USB bridge.
- To power the board via battery, remove the jumper at J2.

1.4 Additional Resources

Visit http://www.cypress.com for additional learning resources in the form of datasheets, technical reference manual, and application notes.

- Getting Started with CapSense

  This guide is an ideal starting point for those new to capacitive touch sensing (CapSense) as well as for learning key design considerations and layout best practices to ensure design success.

1.5 Documentation Conventions

Table 1-1. Document Conventions for Guides

Convention	Usage
`Courier New`	Displays file locations, user entered text, and source code: `C:\ ...cd\icc\`
Italics	Displays file names and reference documentation: Read about the *sourcefile.hex* file in the *PSoC Designer User Guide*.
[**Bracketed, Bold**]	Displays keyboard commands in procedures: [**Enter**] or [**Ctrl**] [**C**]
File > Open	Represents menu paths: File > Open > New Project
Bold	Displays commands, menu paths, and icon names in procedures: Click the **File** icon and then click **Open**.
Times New Roman	Displays an equation: 2 + 2 = 4
Text in gray boxes	Describes cautions or unique functionality of the product.

2. Getting Started

2.1 Hardware

The following figure illustrates the CY3218-CAPEXP1 CapSense Express Evaluation Kit board features.

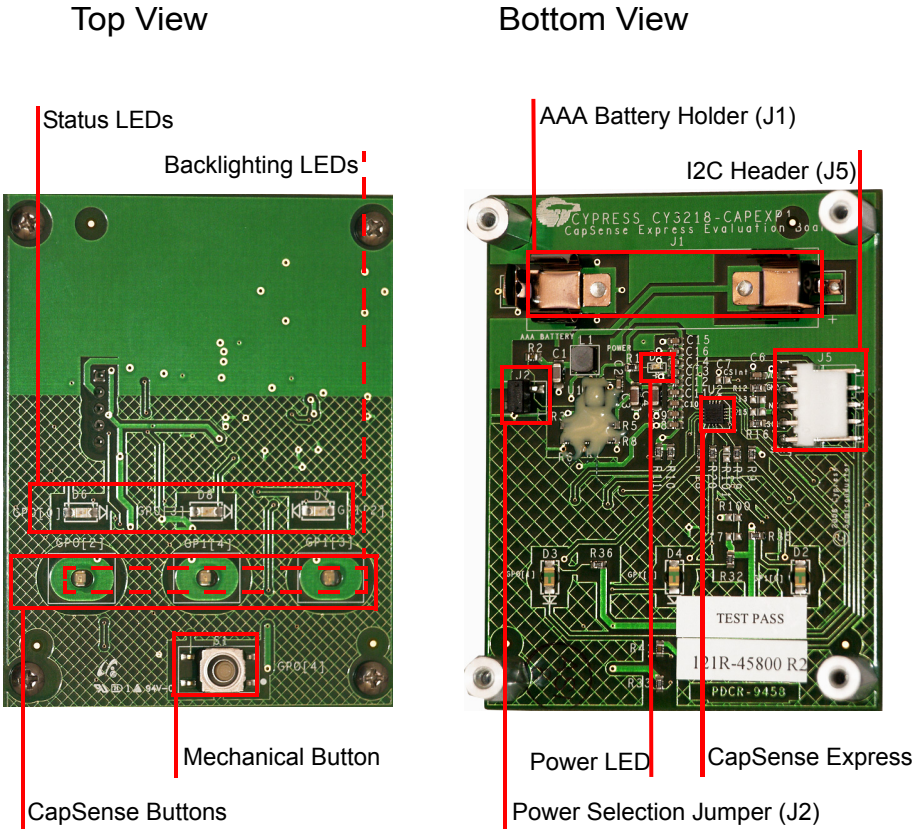

Figure 2-1 shows the block diagram of the CY3218-CAPEXP1 CapSense Express Evaluation Kit. The block diagram has two main sections, power supply and CapSense controller. The power supply section is based on the onboard battery power. The 1.5 V battery voltage is converted into 3.3 V with boost converter because the CapSense controller does not work below 2.4 V. The connector J2 provides an option to power the kit from the onboard battery or an external power source, which must be connected to the J5 connector. An LED indicates the power status of the kit.

The status on touching the three CapSense buttons is indicated using the three LEDs connected to the GPIOs of CapSense Express. A mechanical switch, which demonstrates the capability of CapSense Express to read the status of external digital signals, is also provided with the kit. The CapSense Express controller can be configured and controlled through the I2C interface; therefore, a 5-pin header is provided for the I2C interface.

Figure 2-1. CY3218-CAPEXP1 CapSense Express Evaluation Kit Block Diagram

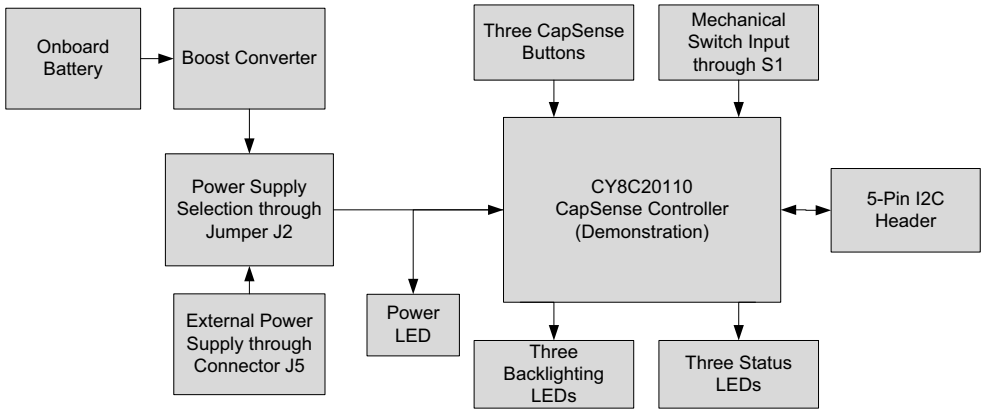

2.1.1 Power Supply System

The CY8C20110 chip is a low-power CapSense Express Controller, which can be powered from a single 1.5 V AAA battery. The CapSense Express controller can work only from 2.4 V to 5.5 V power supply; therefore, a boost converter is used in the kit to generate the 3.3 V power supply required from the 1.5 V battery.

Figure 2-2. Power Supply System

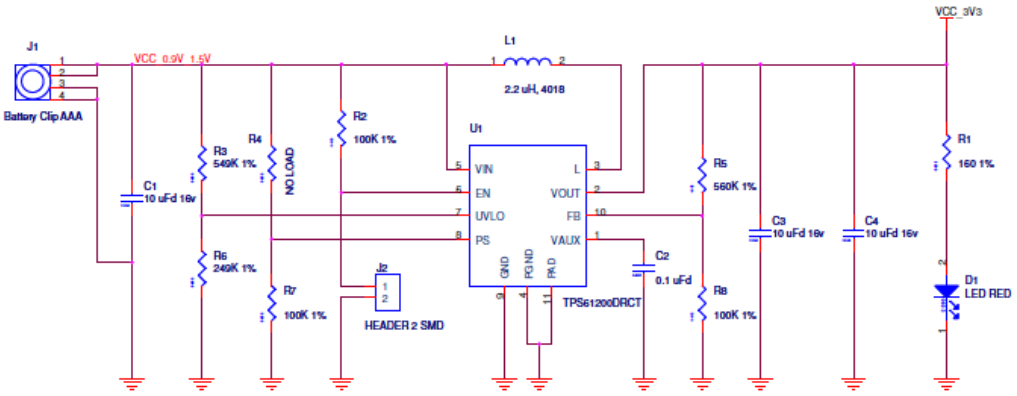

Boost Regulator, 0.9V to 1.5V Input, 3.3V, 200mA Output

The jumper J2 provides power on/off control for the kit. When the jumper is inserted, the Enable Input (EN) pin of the boost converter is connected to ground, which cuts off power to the kit. Removing the jumper J2 connects the EN pin to VDD, to power the kit. The LED turns on when the kit is powered.

2.1.2 Mechanical and CapSense Buttons

Figure 2-3. Input Schematic (CapSense Button and Mechanical Button)

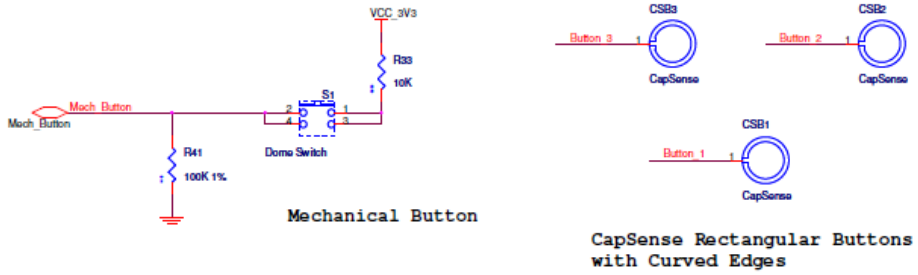

Figure 2-4. LED Schematic



2.1.3 CapSense Controller

The CapSense Express controller chip is connected to two input sections and two output sections. The CapSense rectangular button and mechanical button provides input to the chip. The output is provided through the status LEDs and backlighting LEDs, which turn green. The mechanical button provides the signal with mechanical on/off, similar to the CapSense rectangular button.

Figure 2-5. CapSense Controller Schematic

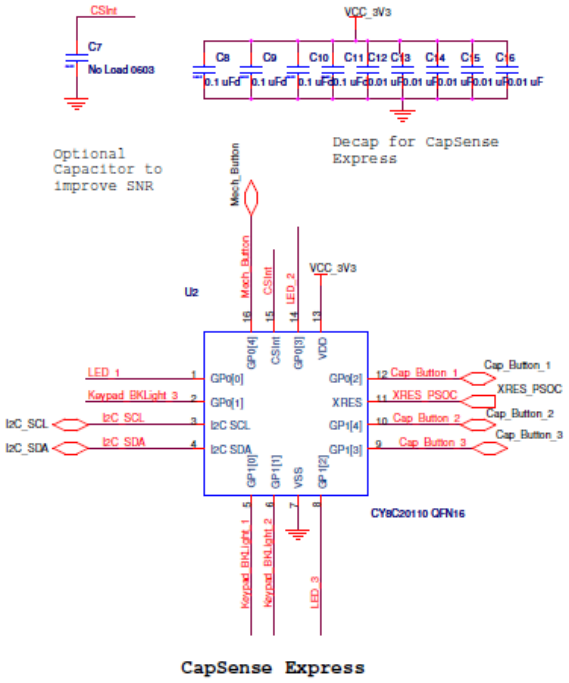

2.1.4 I2C Interface

The CY3218-CAPEXP1 CapSense Express Evaluation Kit has the 5-pin header J5 for I2C interface. The I2C interface is used to connect the CapSense controller with the host system to monitor the sensor status and configure the CapSense controller according to system requirements. The sensor is also tuned during the design stage using the I2C interface and the CY3240-I2USB Bridge tool.

I2C communication needs pull-up resistors, both SCL and SDA signals, on the master or slave side. The kit hardware has footprints R13 and R15 (no-load components by default) to populate pull-up resistors if they are not available on the master side.

The CapSense Express controller supports 50 kHz, 100 kHz, and 400 kHz data transfer speed for the I2C interface.

Figure 2-6. I2C Interface Schematic

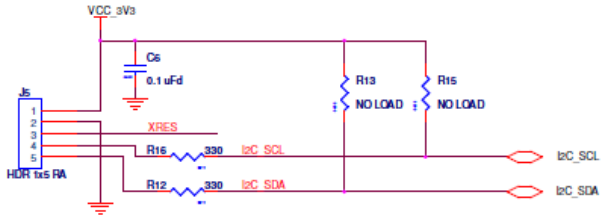

3. Installation

3.1 Install Hardware

CAUTION Make sure you do not touch the board anywhere other than the edges or on the buttons. Touching the board in the wrong area can lead to a short and an unresponsive board. If this happens, reset power to the board. To do this, disconnect the battery supply by placing the jumper on J2. To power the board again, remove the jumper from J2.

The CY3218-CAPEXP1 CapSense Express Evaluation Kit is preprogrammed with demonstration firmware. These instructions assume that your board is not reconfigured from the factory settings. If it has, follow the instructions given in Create Project with CY3218-CAPEXP1 chapter on page 21 to configure the board.

1. Unpack the CY3218-CAPEXP1 CapSense Express Evaluation Kit.
2. Insert the AAA battery into the battery holder.
3. Remove the jumper from J2 (back, left, and center of board). The red LED, D1, on the back of the board lights up.
4. Touch a button on the board. The LED in the center of the button and the LED above the button lights up.
5. Press the mechanical button at the bottom of the board; the three LEDs above the buttons turn on.
6. Turn the board off by replacing the jumper on J2. Note that replacing the jumper disables battery operation.

3.2 Install Software

Install the software required to load and run the code examples.

3.2.1 Before You Begin

All Cypress software installations require administrator privileges, but this is not required to run the installed software.

1. Shut down all Cypress software that is currently running.
2. Disconnect ICE-Cube or MiniProg1 devices from your computer.

Note that CapSense Express runs on an older version of PSoC Designer (PD5.0). Therefore, both versions of PSoC Designer are required - PD5.0 for CapSense Express and PD5.1 for all other devices.

3.2.2 Installing Software

To use the CY3218-CAPEXP1 CapSense Express Evaluation Kit, you need:

- PSoC Designer 5.0 SP6
- PSoC Programmer 3.13.3 or later
- Bridge Control Panel 1.3 or later (packaged with PSoC Programmer)

If PSoC Designer (versions older than PD5.0 SP6), PSoC Programmer (versions older than PP3.13.3), and Bridge Control Panel (versions older than BCP1.3) are currently installed, uninstall the same before reinstalling. To uninstall, go to **Start > Control Panel > Add or Remove Programs** and click the **Remove** button adjacent to the particular software. Follow the instructions to uninstall.

Follow these steps to install the software:

1. Insert the kit CD/DVD into your PC's CD/DVD-ROM drive. Click **Install PSoC Programmer 3.13.3…** on the installation startup screen.



2. Wait for the installer to copy all the necessary files to a temporary folder.

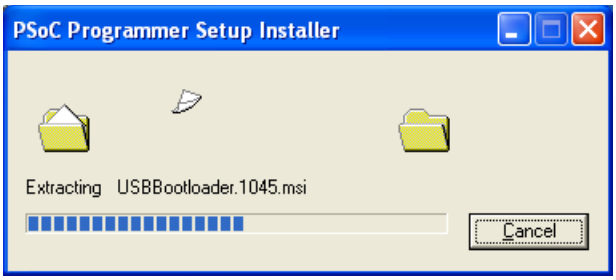

3. Click **Next** to install in the default location. To select a different location, click the **Change** button.

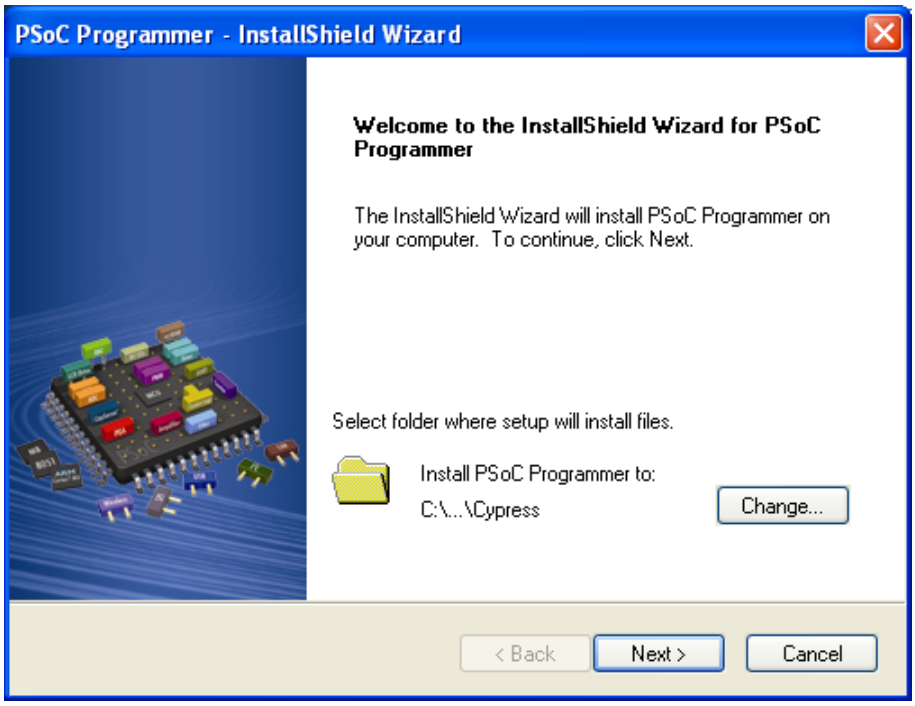

4. Wait for the installation to complete.

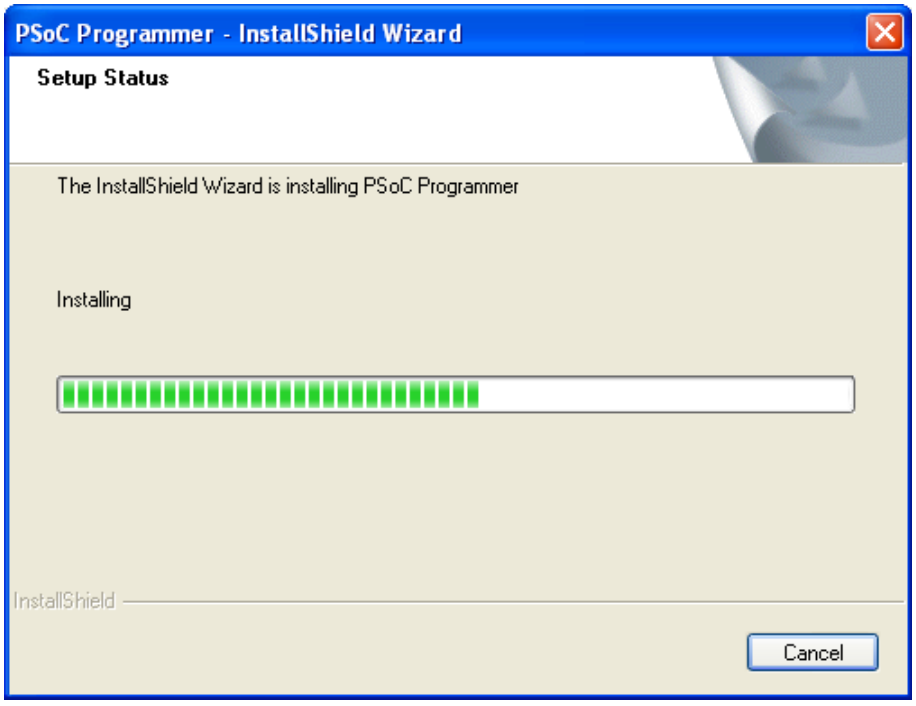

5. The CyInstaller window for PSoC Programmer is displayed when the installer is ready. Select **Typical** in the **Installation Type** options list and click **Next** to proceed.

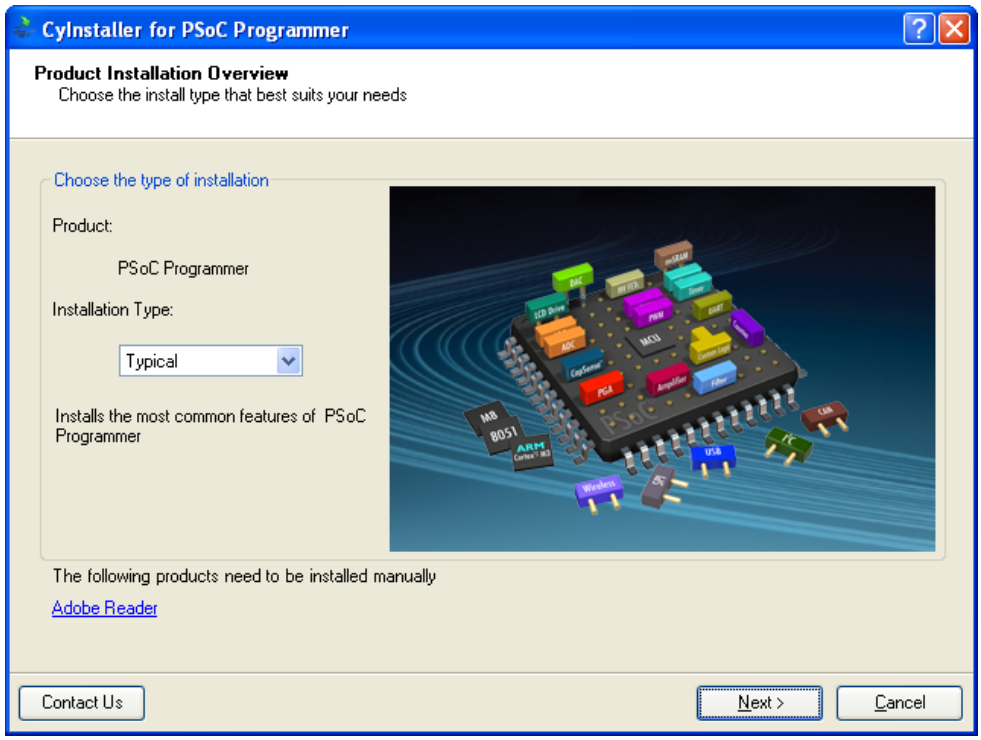

6. Read the Software License Agreement and select **I accept the terms in the license agreement**; click the **Next** button.

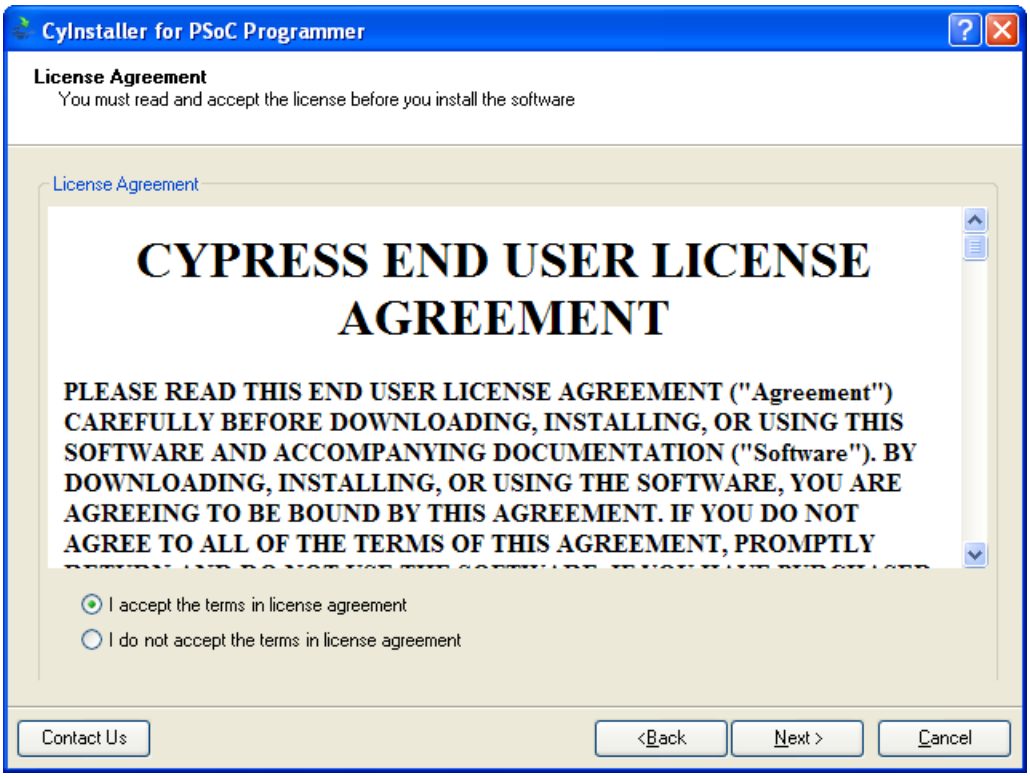

7. Wait for the installation to complete.

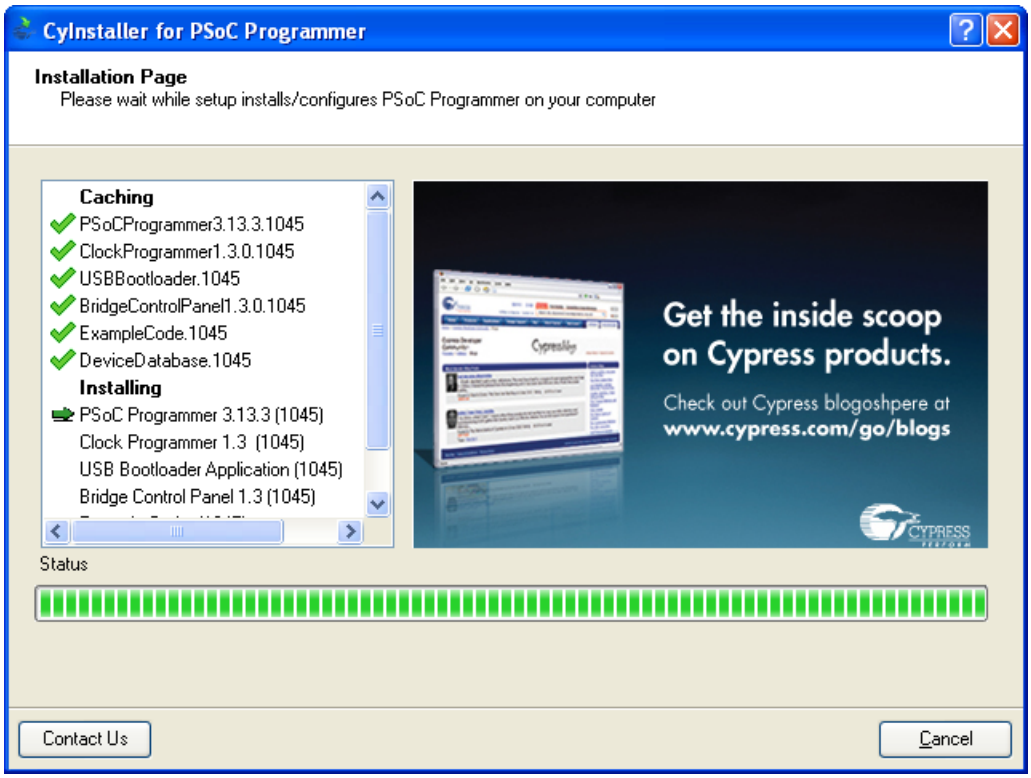

8. Click **Finish** to complete the installation. Select the **View Release Notes** option to open the release notes after the installer window closes.

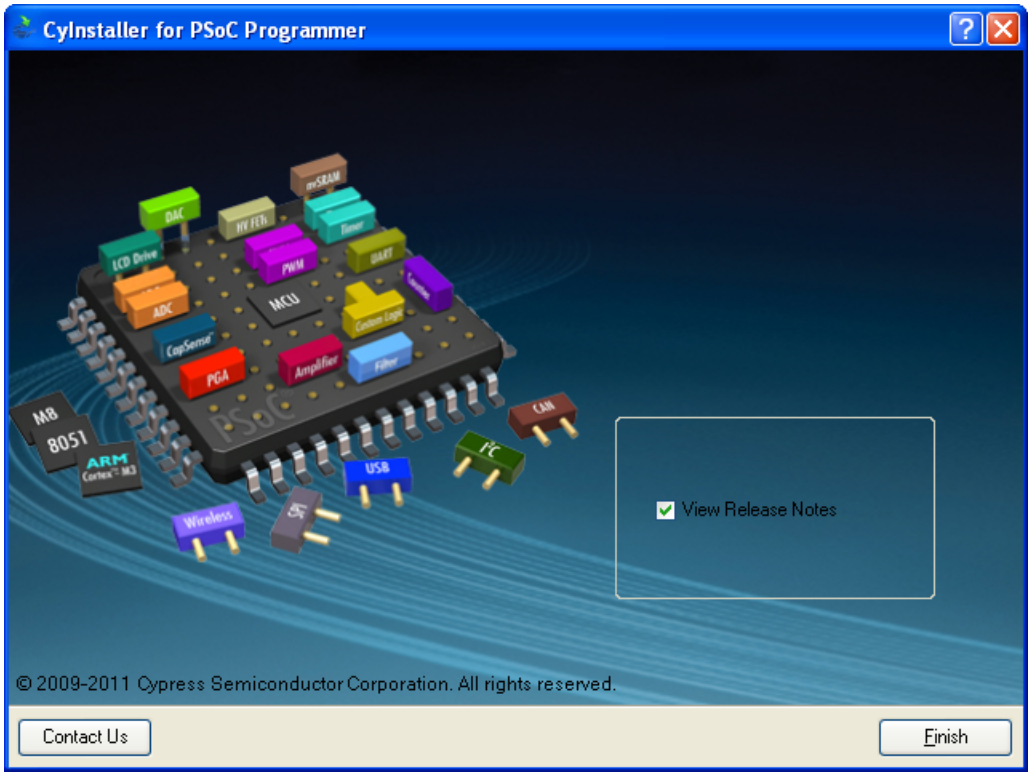

9. Click **Install PSoC Designer 5.0…** in the installer startup screen.



Note If the installer does not start automatically, start it manually by executing *cyautorun.exe* in the CD/DVD's root directory.

10. Wait for the installer to copy all the necessary files to a temporary folder.

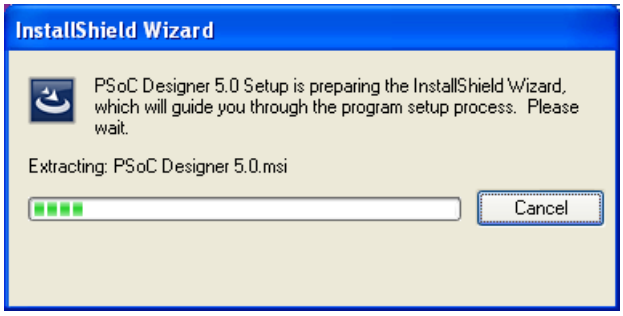

11. Read the Software License Agreement and select **I accept the terms of the license agreement**; click the **Next** button.

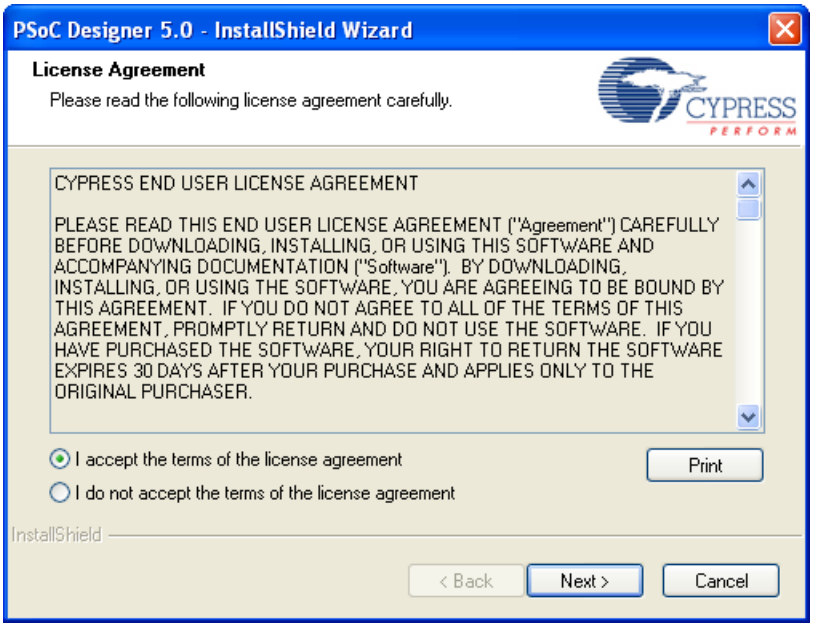

12. Click **Next** to proceed with the Installation.

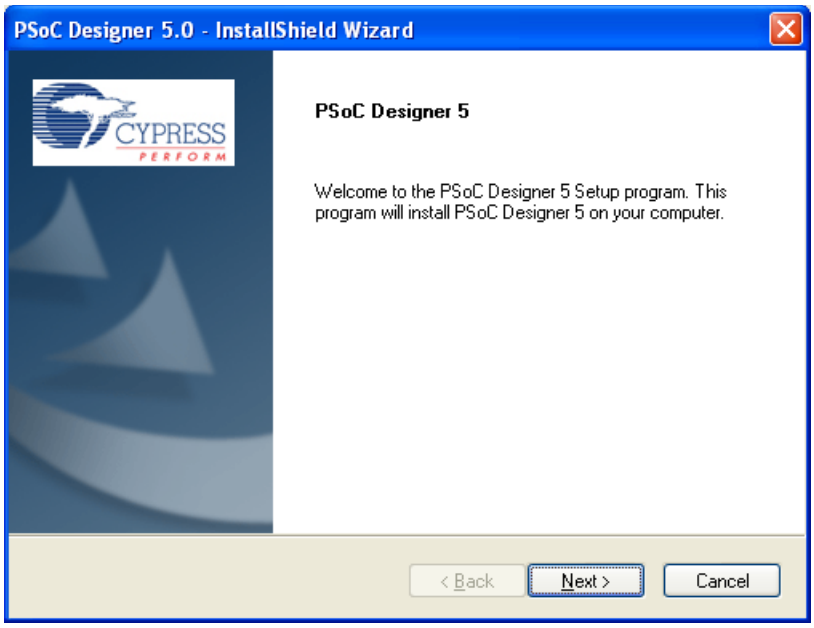

13. Click **Next** to install in the default location. To customize the install location, click on the **Browse** button and navigate to the respective directory.

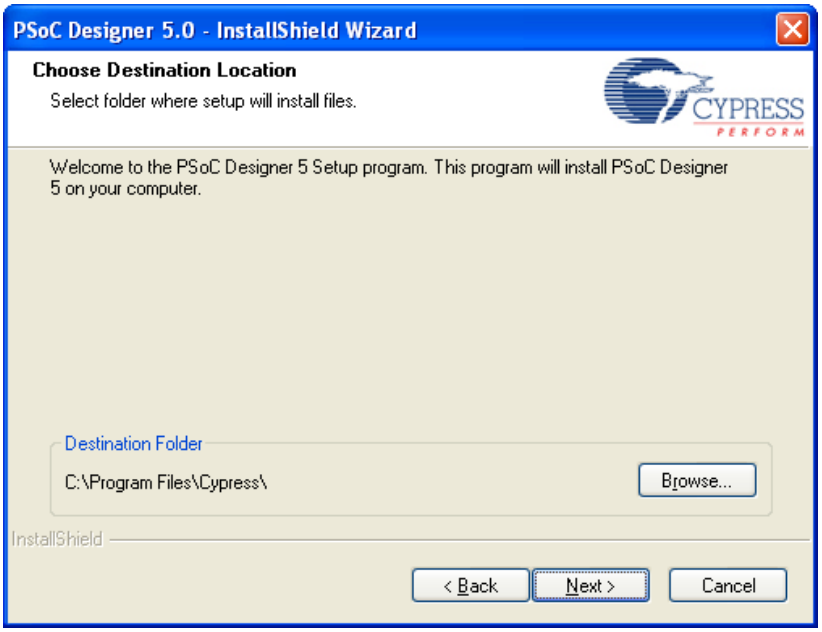

14. Review the settings before starting the installation. Click **Back** to change the settings, if required. Otherwise, click **Next** to start the installation.

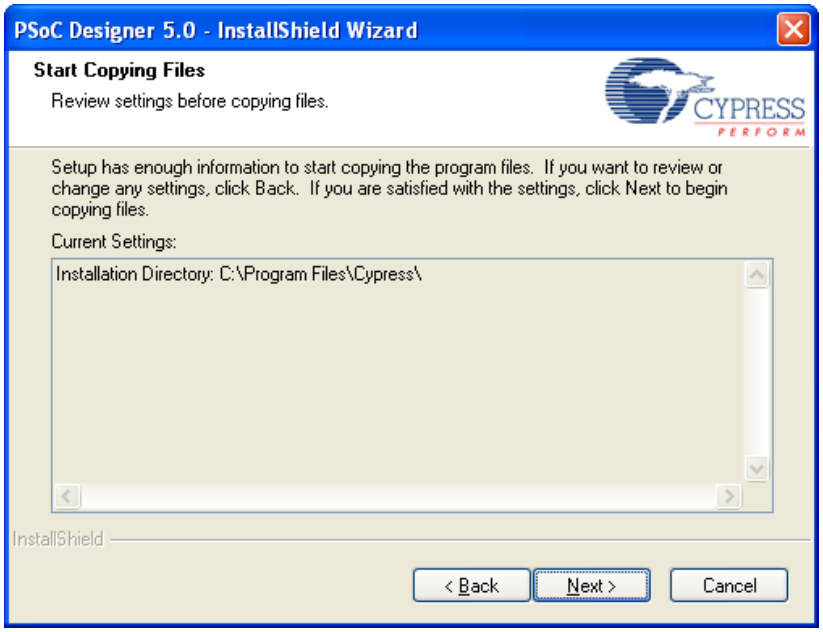

15. Wait for the PSoC Designer 5.0 installation to complete.

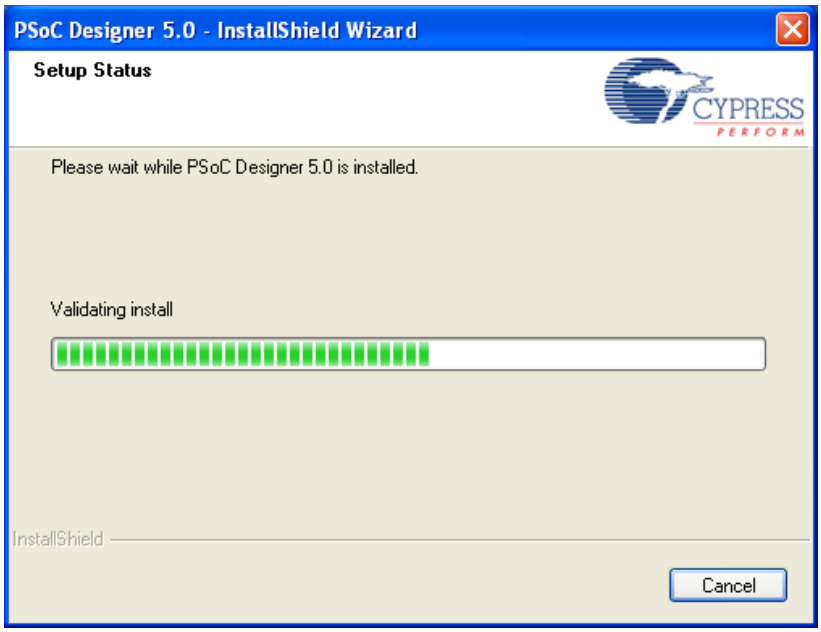

16. Click **Yes** if you want a shortcut to PSoC Designer on your desktop; click **No** to continue with the installation.

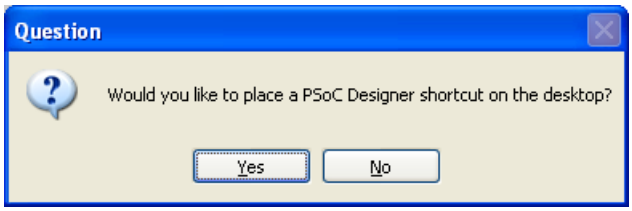

17. Click **Finish** to complete the installation. Select the **View Release Notes** option to open the Release Notes after completing the installation.

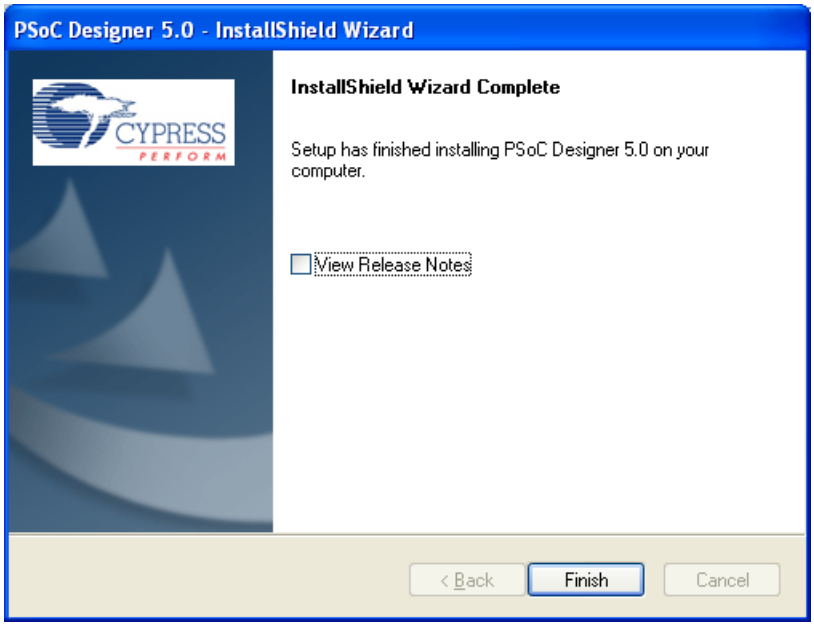

3.2.2.1 PSoC Designer Overview

PSoC Designer is the revolutionary integrated design environment (IDE) that helps you to customize PSoC to meet your specific application requirements. PSoC Designer accelerates system bring-up and time-to-market. Develop your applications using a library of pre-characterized analog and digital peripherals in a drag-and-drop design environment. Then, customize your design leveraging the dynamically generated API libraries of code. Finally, debug and test your designs with the integrated debug environment including in-circuit emulation and standard software debug features.

To open the application, click **Start > All Programs > Cypress > PSoC Designer <version>> PSoC Designer <version>**.

For instructions on creating and developing firmware projects for CapSense Controller in PSoC Designer, see the *IDE User Guide.pdf* available at the following location:
`<Install_directory>:\PSoC Designer\<version>\Documentation\`.

4. Create Project with CY3218-CAPEXP1

4.1 Functional Description

The board consists of three CapSense buttons; it has three status LEDs and three backlight LEDs associated with these CapSense buttons. The status LEDs light up when the CapSense buttons are touched. The backlight LEDs are initially lit 5 percent and glow to full brightness when the CapSense buttons are touched.

The completed project is available in `<CD_root>:\Program\ThreeCapSenseButtons\`.

The CY3240-I2USB Bridge is used to transfer the configurations done in PSoC Designer to the PSoC device on the board. The CY8C20110 device used in this kit is an I2C communication enabled device for CapSense configuration, reading the status and data registers of the device, and so on. See the device datasheet for more details.

The I2USB Bridge is used to monitor and tune the CapSense parameters; these parameters can be transferred to the device from the GUI through the I2USB Bridge without reprogramming the device.

4.2 Create New Project

1. Connect your computer to the CapSense test board I2C connector (J5) using the CY3240-I2USB Bridge and a USB cable, as shown in Figure 4-1.

Figure 4-1. CY3240-I2USB Connection to CY3218-CAPEXP1 Kit

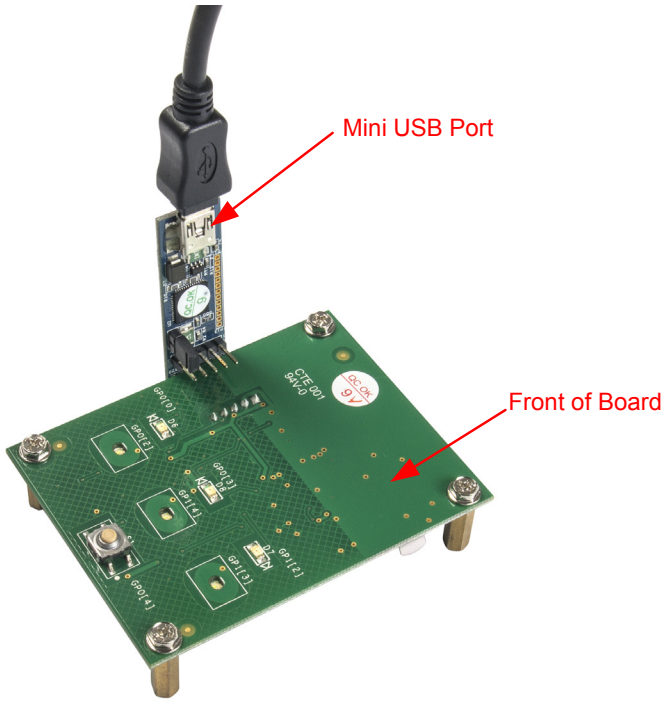

2. Ensure that the jumper J2 at the back of the board is open and the red LED, D1, is ON.
3. Launch **PSoC Designer**.
4. To create a new project, click on **File > New Project**.
5. Select the **System-level Project** icon in **Project types**; name the project 'ThreeCapSenseButtons' and save it to a location of your choice.

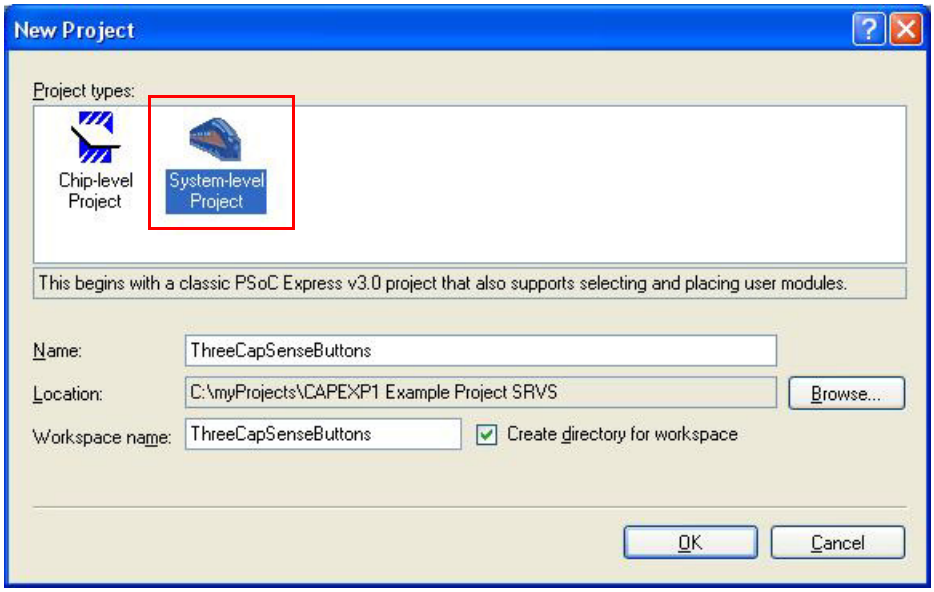

6. Select **View** > **All Driver Catalogs** and then select the **Inputs** tab, as shown in the figure. Open **CapSense Express > CY8C20110**, right-click the **10 GPIO/CS Button Set** driver, and select **Add to Design**. The Add Input Driver window opens.

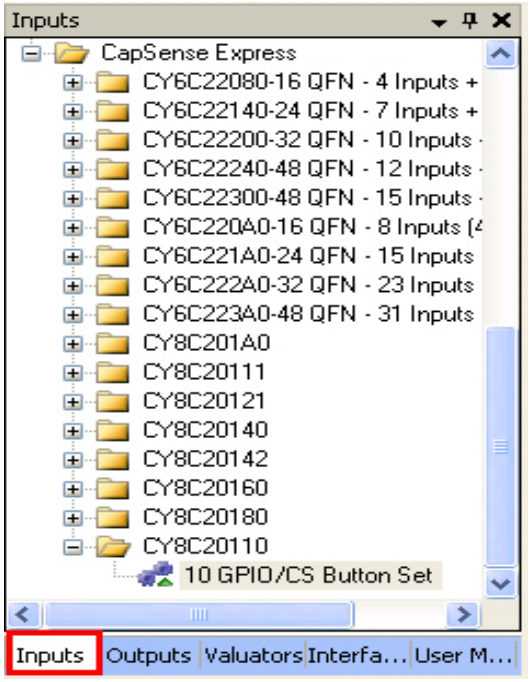

7. Name the driver **ThreeButtons** and click **OK.** The CapSense Express 10 GPIO/CS Button Set window opens.

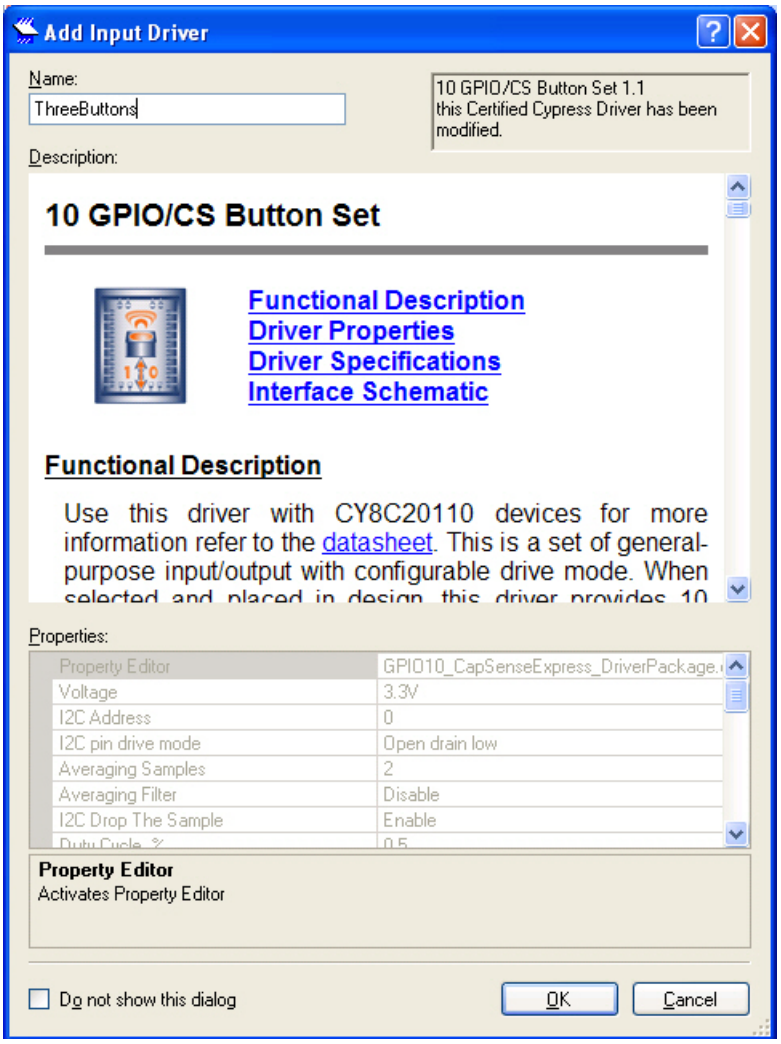

8. In the system-level project, each CapSense button, LED, and the mechanical button require a separate driver. The '10 GPIO/CS Button' driver is a special driver that allows you to configure all the buttons, LEDs, and the mechanical button in one interface. Based on the I/O requirements, drivers are available in the driver catalog.

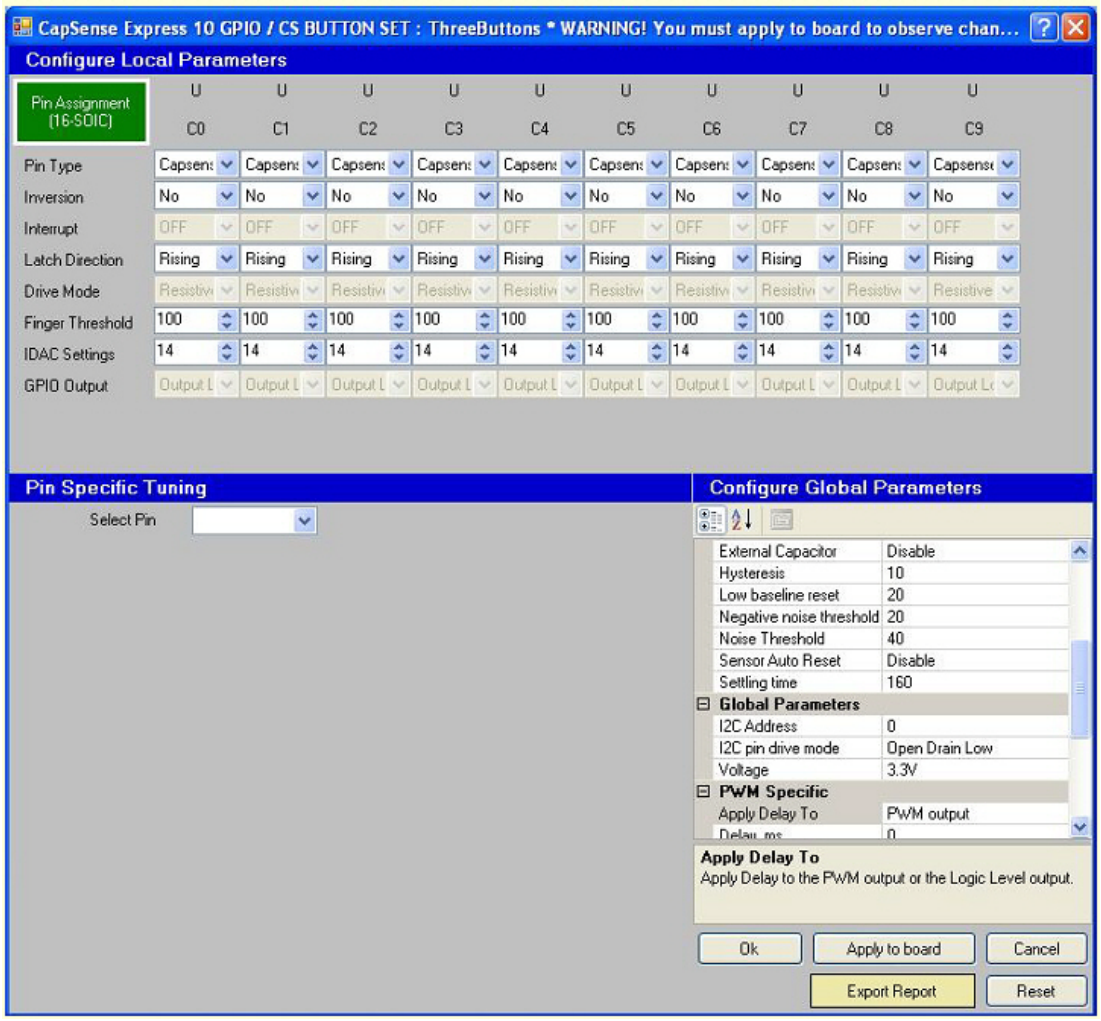
CapSense Express 10 GPIO / CS BUTTON SET : ThreeButtons * WARNING! You must apply to board to observe chan...
Configure Local Parameters
Pin Assignment [16-SOIC]
C0 C1 C2 C3 C4 C5 C6 C7 C8 C9
Pin Type
Inversion
Interrupt
Latch Direction
Drive Mode
Finger Threshold
IDAC Settings
GPIO Output
Pin Specific Tuning
Select Pin
Configure Global Parameters
External Capacitor
Hysteresis
Low baseline reset
Negative noise threshold
Noise Threshold
Sensor Auto Reset
Settling time
Global Parameters
I2C Address
I2C pin drive mode
Voltage
PWM Specific
Apply Delay To
Apply Delay To
Apply Delay to the PWM output or the Logic Level output.
Ok
Apply to board
Cancel
Export Report
Reset

4.3 Configure the Driver

By default, all I/Os in the Configure Local Parameters pane are set to CapSense Input. To set up backlight LEDs with PWM, set the Pin Type for C3 through C5 to **PWM** and the Drive Mode to **Strong Drive**. Similarly, to set up status LEDs, set the Pin Type for C6 through C8 to **GPOutput** and the Drive Mode to **Strong Drive**. For the mechanical button, set C9 to **GPInput** and set the Drive Mode to **Resistive Pull Up** and Inversion to **Yes**. Set the **Finger Threshold** of **C0** through **C2** CapSense inputs to **150.**

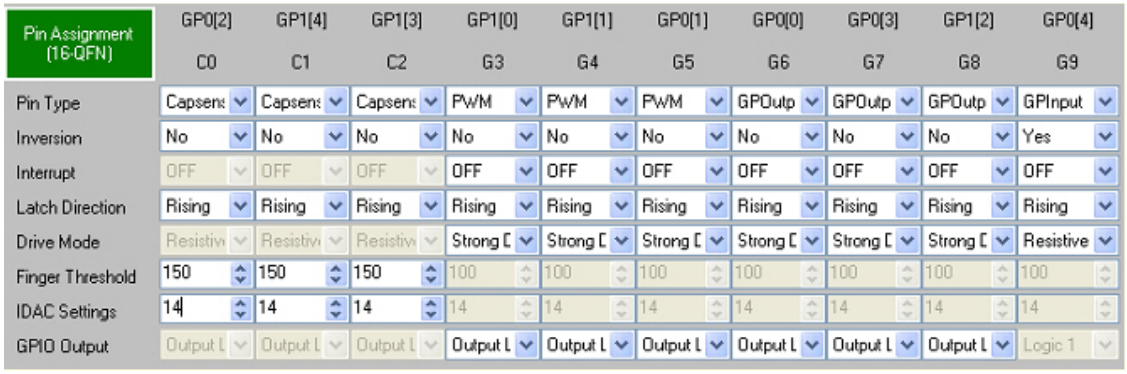

4.4 Configure Button and LED Behavior

1. In the Pin Specific Tuning pane, choose **G3** from the Select Pin menu.



2. Click on the yellow box of the CapSense button you want to assign to LED **G3**. For LED output pin **G3**, select the CapSense button **C0**. A small line connects **C0** to the purple OR box. To turn the LED on when the button is touched, click the small box (highlighted in the following figure) to the right of the purple OR box.

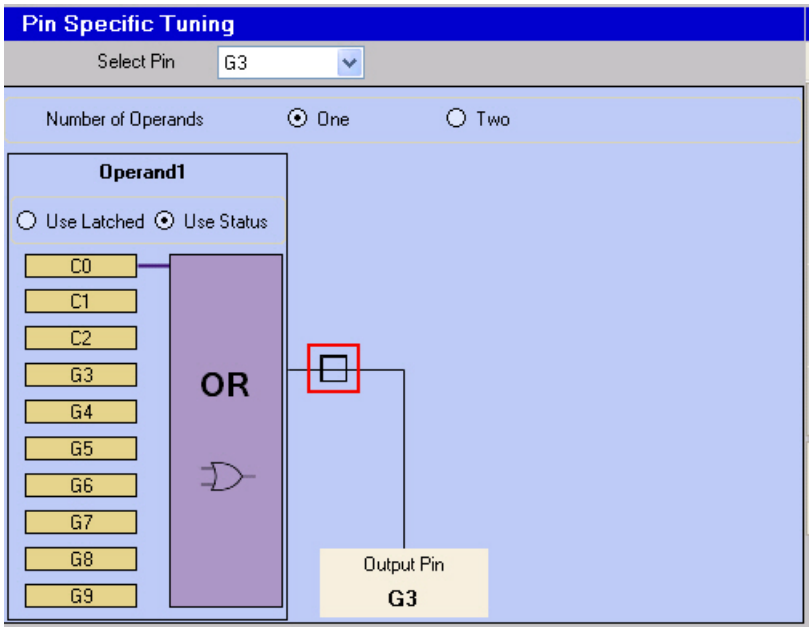

This changes the square to an invert symbol; this is needed as the LED is connected in current sink mode.

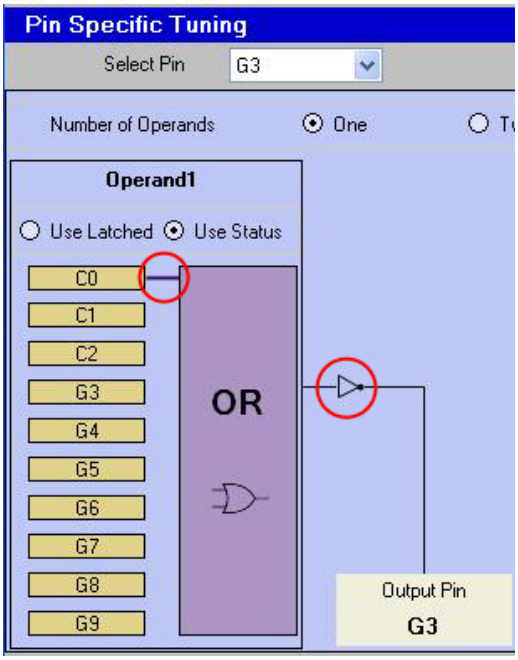

3. Repeat step 2 for all three backlight LEDs G3, G4, and G5, and route them to CapSense buttons C0, C1, and C2, respectively.
4. The status LEDs turn On only when a mechanical button is touched. To configure this behavior, select the status LED G6 from the drop-down list and select the CapSense button and the mechanical button G9 as input to the LED. Click on the square next to purple box and change to an invert symbol; this is needed as the LED is connected in current sink mode. The pin G6 looks similar to the following figure when configured.

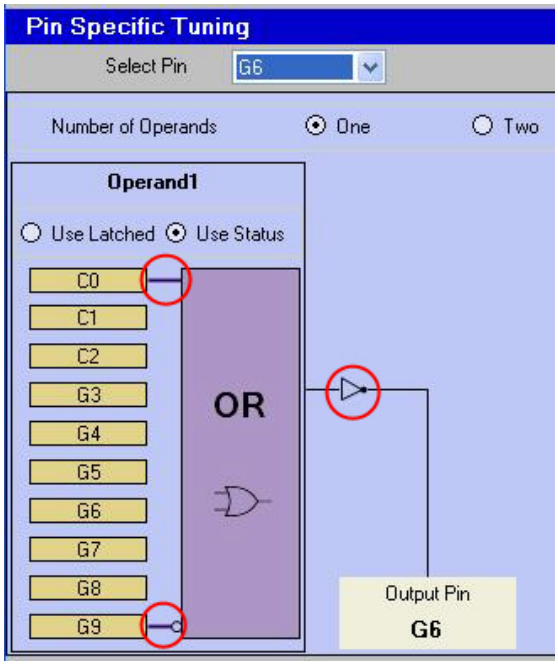

5. Repeat the same procedure for the status LEDs G6, G7, and G8 with routing to CapSense buttons C0, C1, and C2, respectively.
6. The configuration of all the LEDs appear as follows.

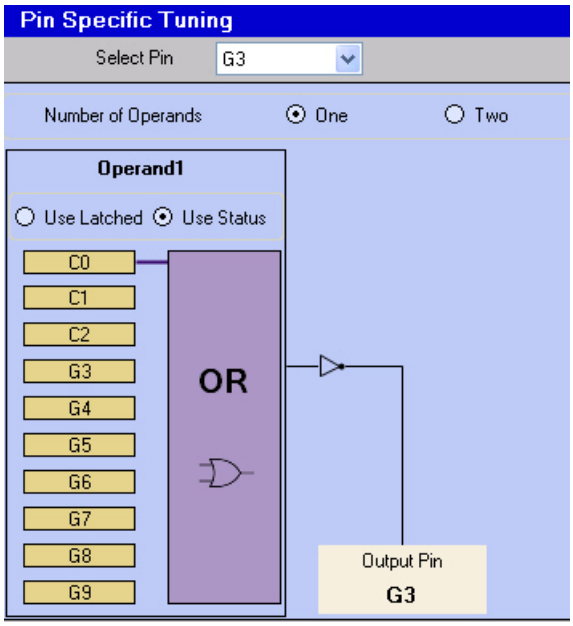

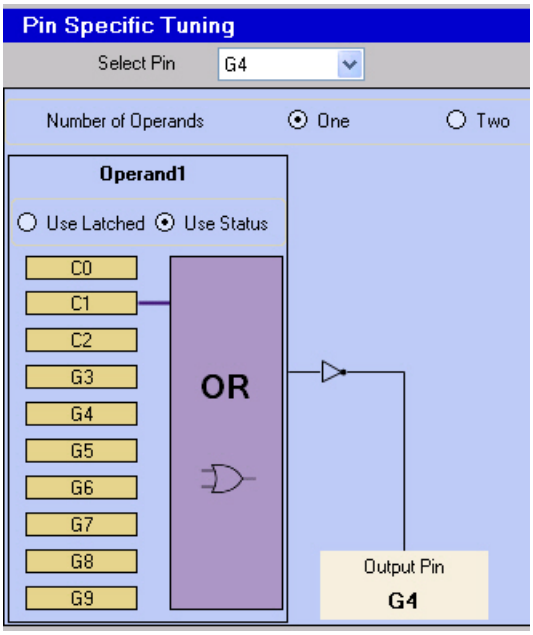

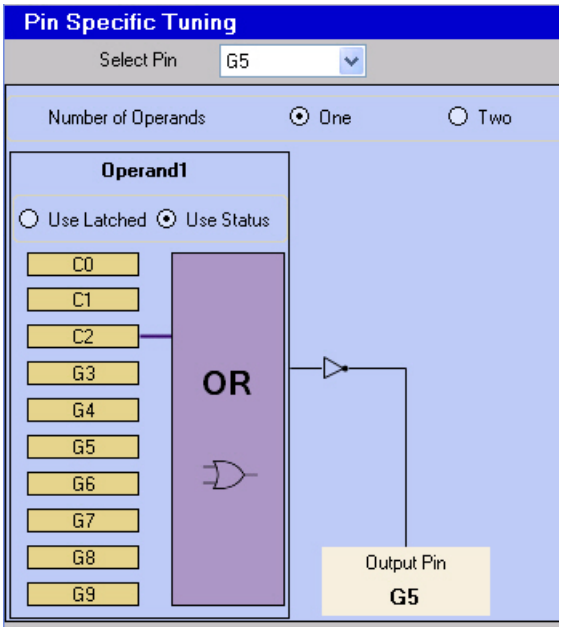
Pin Specific Tuning
Select Pin
G5
Number of Operands
One
Two
Operand1
Use Latched
Use Status
C0
C1
C2
G3
G4
G5
G6
G7
G8
G9
OR
Output Pin
G5

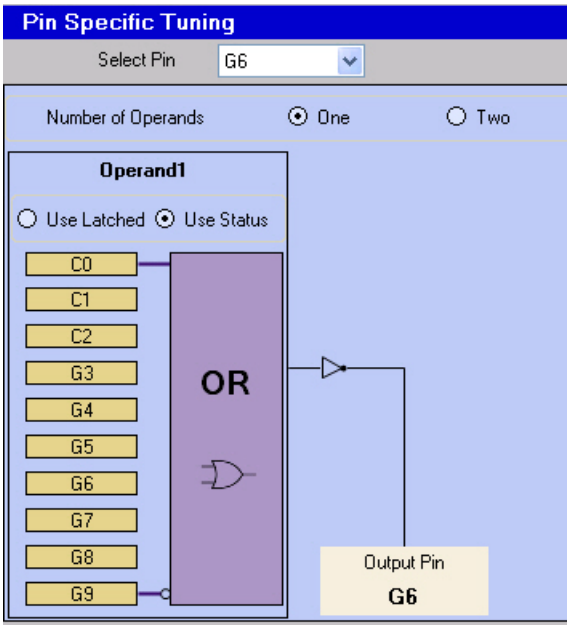
Pin Specific Tuning
Select Pin
G6
Number of Operands
One
Two
Operand1
Use Latched
Use Status
C0
C1
C2
G3
G4
G5
G6
G7
G8
G9
OR
Output Pin
G6

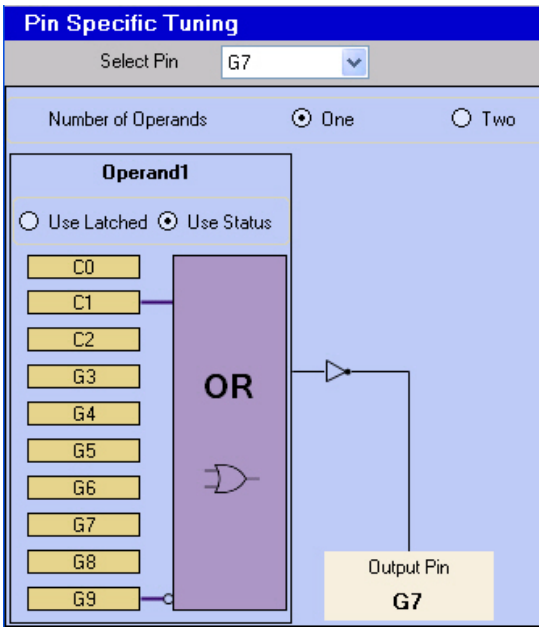

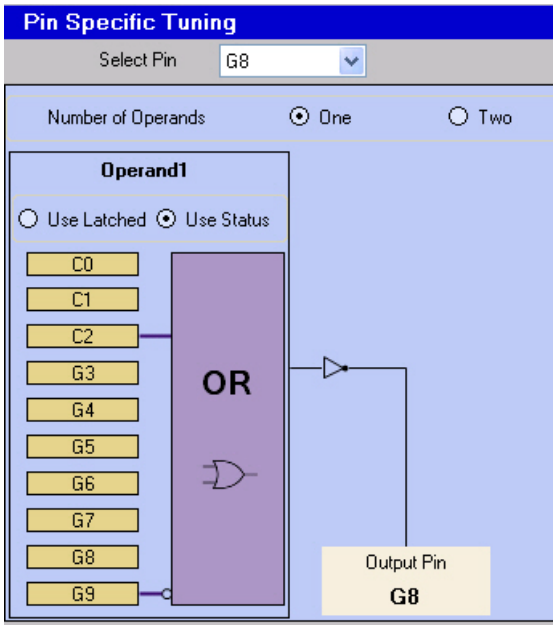

7. Enable the **I2C Drop The Sample** filter in the CapSense Filtering Specific section in the Global Parameters Window.



8. Use the default CapSense Global Parameters, as shown in the following figure.

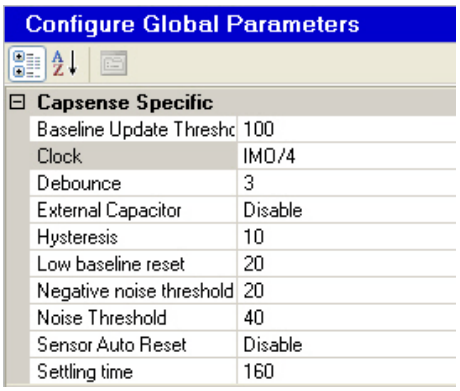

9. Configure I2C related parameters in **Global Parameters,** as shown in the following figure.

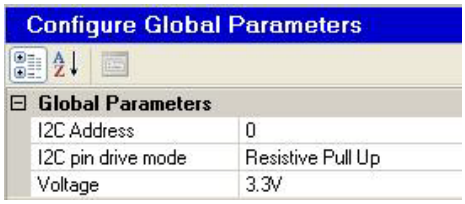

10. Disable sleep mode in the Sleep Management section because it does not allow CapSense tuning.

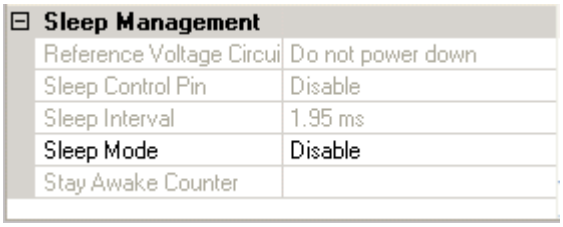

11. Configure PWM Specific parameters with 90 percent duty cycle, mode to Toggle-FlipFlop and Pin State to Logic 0/PWM.

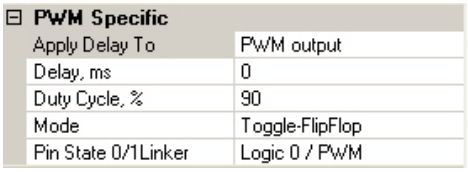

4.5 Pin Assignment

1. Click the **Pin Assignment (16-QFN)** button in the top left. The User Pin Assignment window opens.



2. Select **16 pin QFN** as the Pin Package Type.



3. Assign each CapSense button, LED, and mechanical button on the board to the pin annotated on the board

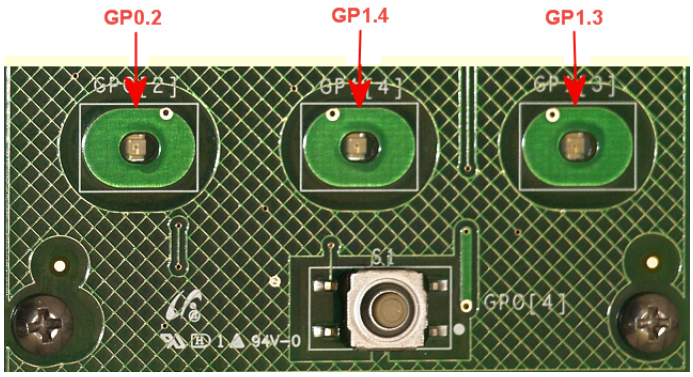

4. Drag each driver from the unassigned list to the appropriate pin.

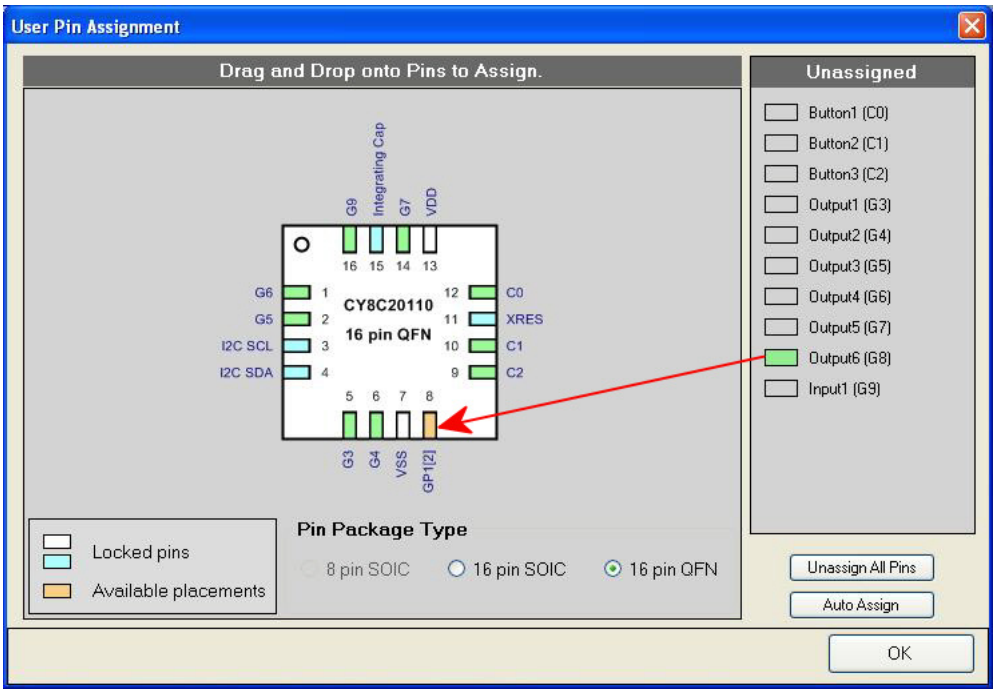

Driver	Pin
Button1 (C0)	GP0[2]
Button2 (C1)	GP1[4]
Button3 (C2)	GP1[3]
Output1 (G3)	GP1[0]
Output2 (G4)	GP1[1]
Output3 (G5)	GP0[1]
Output4 (G6)	GP0[0]
Output5 (G7)	GP0[3]
Output6 (G8)	GP1[2]
Input1 (G9)	GP0[4]

5. Click **OK** to close the User Pin Assignment window.
6. Click **Apply to board**.



7. Wait for the **Configure through USB2IIC Bridge status** window to appear and click **OK.**

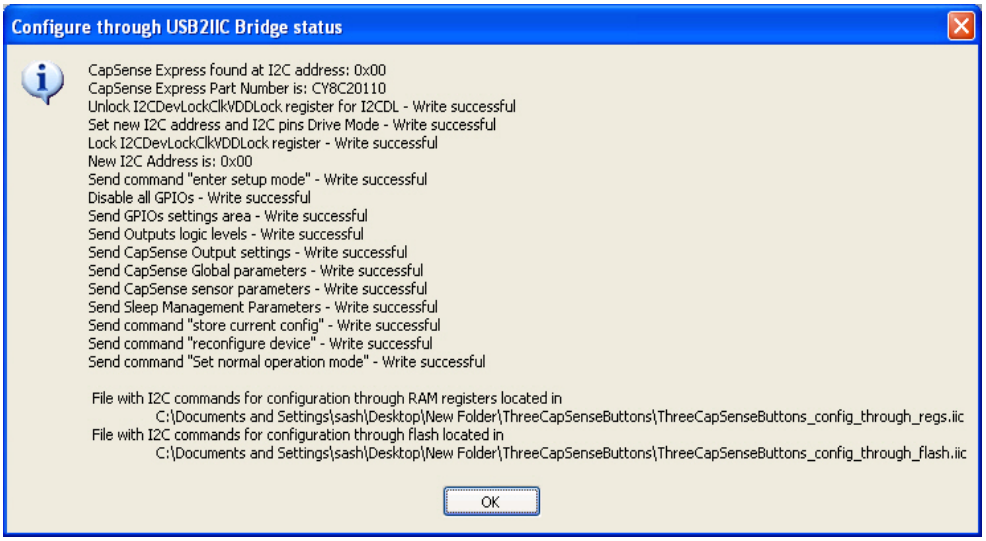

8. Click **OK** to close the CapSense Express 10 GPIO/CS Button Set: ThreeButtons window.

4.6 Verify Output

1. Select the I2CUSB bridge power supply option.

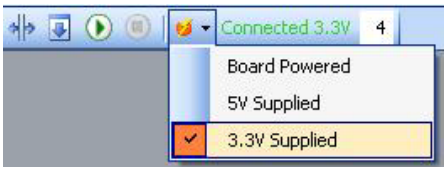

2. The backlit LEDs are at 5% brightness and the status LEDs are OFF.
3. Touching the CapSense buttons toggles the LED brightness from 5% to 100%. The corresponding status LED turns ON as long as the finger is present on the CapSense button.
4. The status LEDs associated with CapSense buttons are as follows:

LED	CapSense Button
D6	GP0[2]
D7	GP1[3]
D8	GP1[4]

5. Pressing the mechanical switch S1 turns ON all the status LEDs. The status LEDs will be ON as long as the switch is pressed and turns OFF when switch is released.

5. Tune CY3218-CAPEXP1

5.1 Monitor CapSense Signal

Follow these steps to monitor the CapSense signal.

1. Click **Monitor** to open the Monitor view.



2. The Monitor Status indicator shows **Connected**.



3. Select the I2CUSB bridge power supply option.

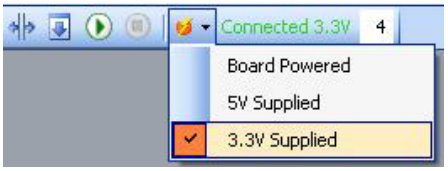

4. Right-click **ThreeButtons** and select **Show Tuner**.

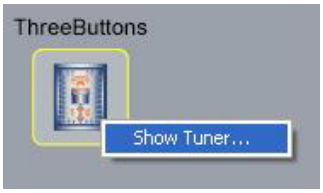

5. The Monitor Status indicator changes to **Running** and the CapSense Express window opens.



6. If your board is configured with another design, click **Apply to board** in the lower right of the CapSense Express window. When the **Configure through USB2IIC Bridge status** dialog appears, click **OK**. If your board is already configured with the correct design, the Apply to board button is grayed out.

5.2 Tune Buttons

1. Select **C0** from the Select Pin menu.



2. Touch the **C0** button (extreme left CapSense button). When the difference variable (represented as a red vertical bar) is higher than the finger threshold (represented as a dark blue horizontal bar, set to 150 by default), the touch registers as a hit.



3. Place the overlay provided with the kit on the board (covering all buttons).
4. Reset the device. To do this, click **OK** to exit the Tuning window and select the powering option as **Board Powered**; then choose **3.3 V Supplied** again.
5. Notice how the Difference Count value changes. If the difference variable does not rise above the required finger threshold, the button does not register a hit. The LEDs do not function as expected.



6. Reducing IDAC increases the signal strength and vice versa. To tune this button with overlay, reduce the IDAC; apply the new setting to the board by hitting the **Apply to Board** button. Now, touch the button and check the response; if it does not meet the requirements, repeat the process.

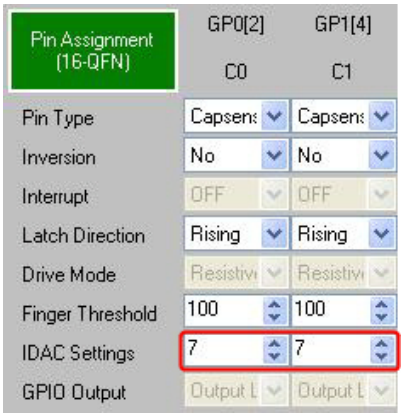

7. Repeat step 1 to step 6 for C1 and C2 CapSense buttons.
8. Test the board by touching the CapSense buttons. The LEDs on board function according to the design. Also notice how the Pin Status and Latched Value indicators change based on touch.

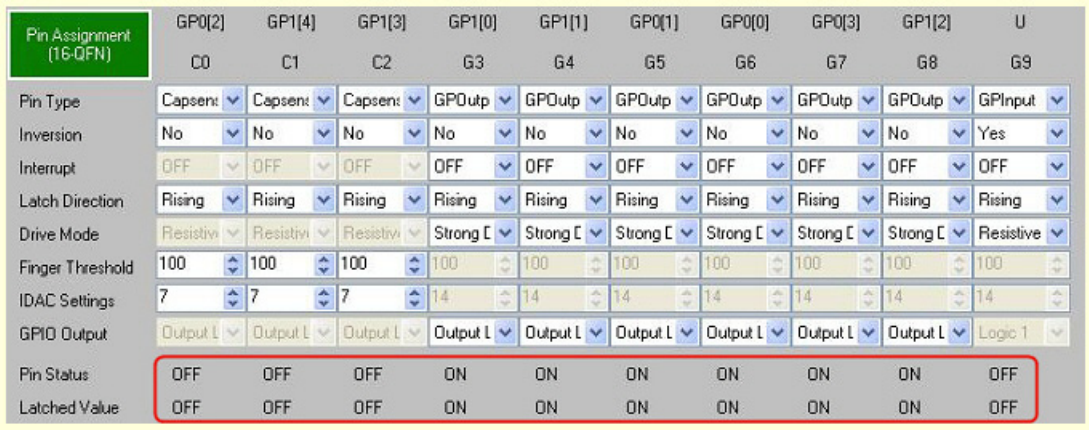

9. Experiment with other materials such as plastic and wood or overlay used for your product.

6. Technical References

6.1 CY3218-CAPEXP1 Kit Schematic

The schematic for the CY3218-CAPEXP1 CapSense Express Evaluation Kit is available on the kit CD/DVD:

- PDF file: `<CD_root>\Hardware\REF_14695_REVSA_Schematic.pdf`
- DSN file: `<CD_root>\Hardware\REF_14695_REVSA.dsn`

6.1.1 Schematic Page 1

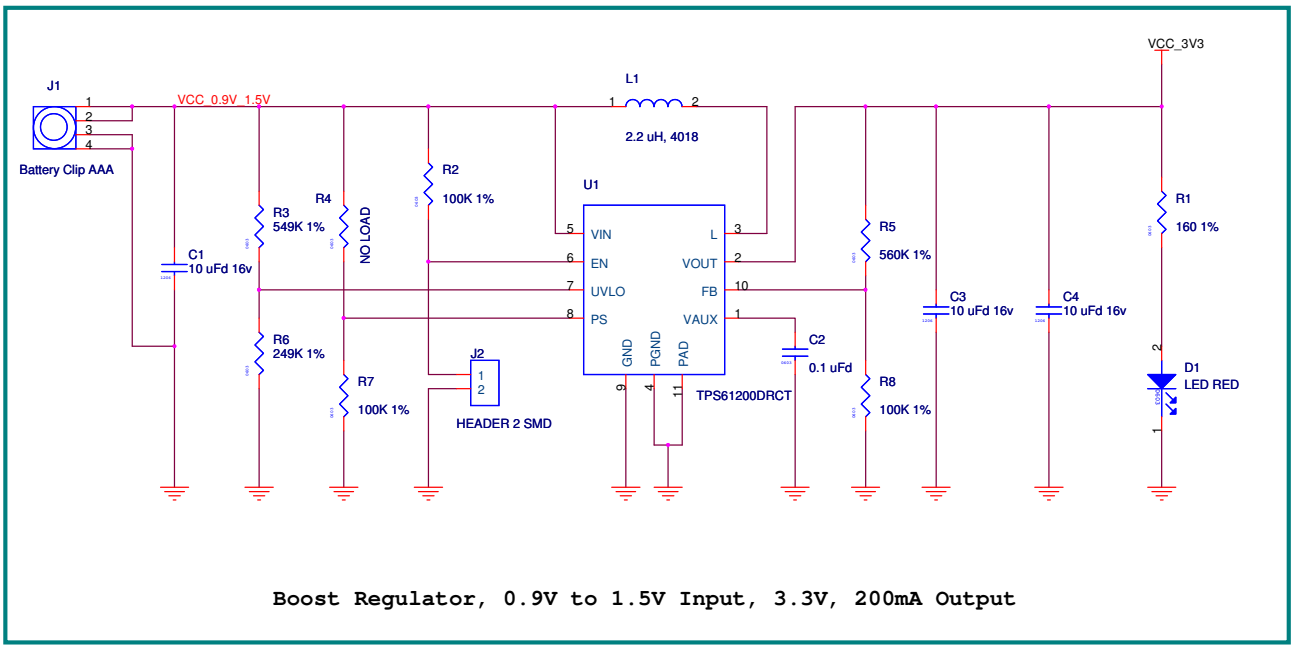

6.1.2 Schematic Page 2

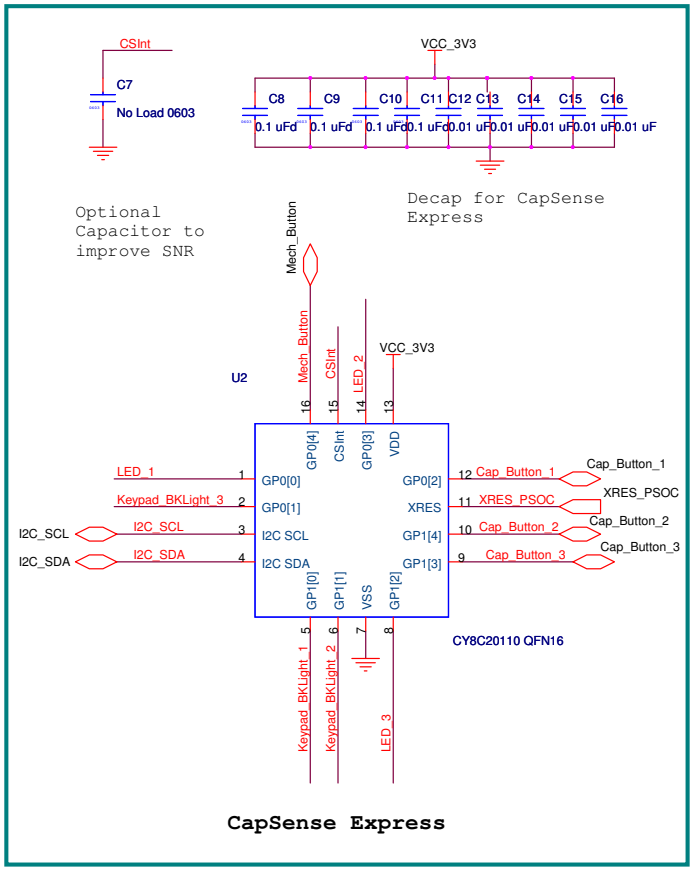

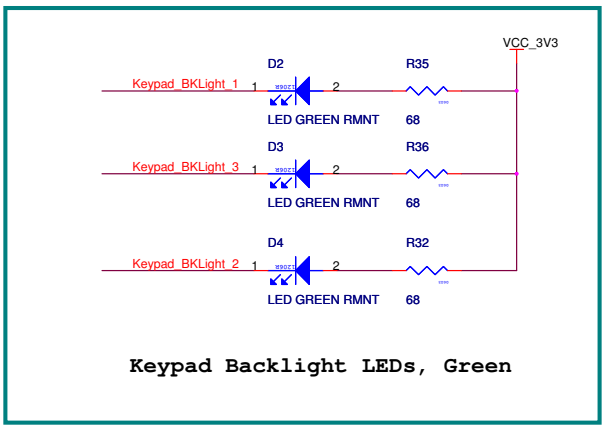

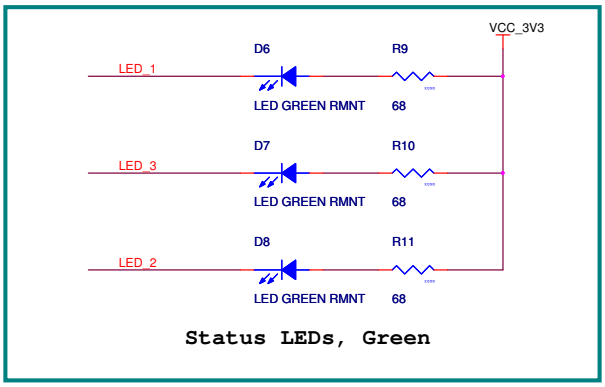

6.1.3 Schematic Page 3

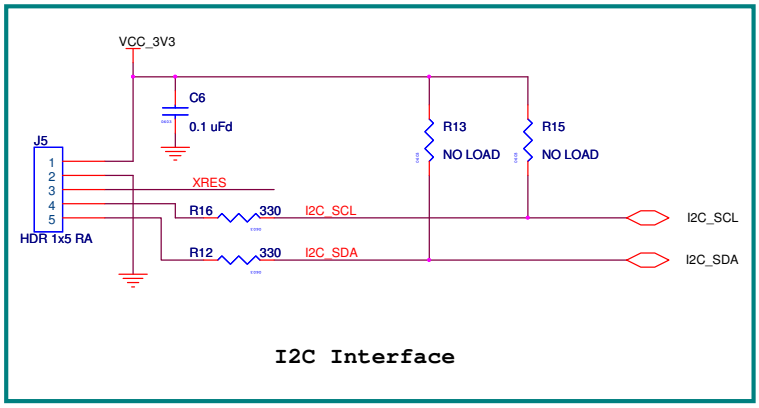

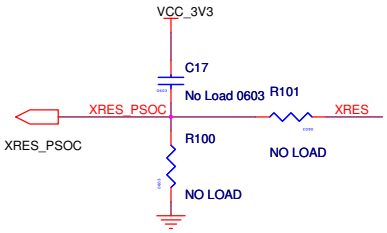

6.1.4 Schematic Page 4

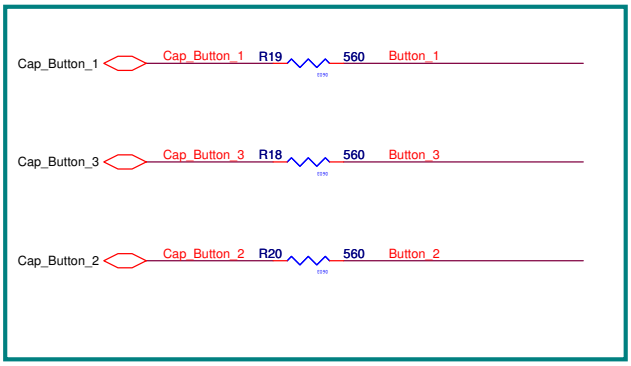

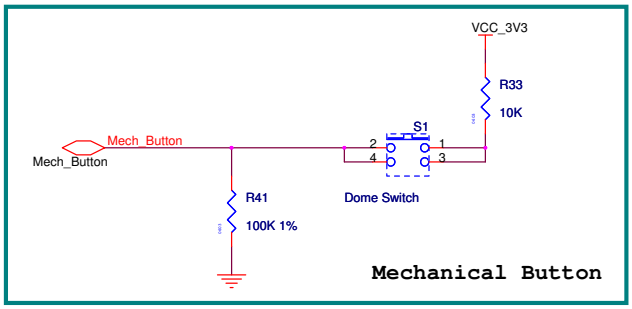

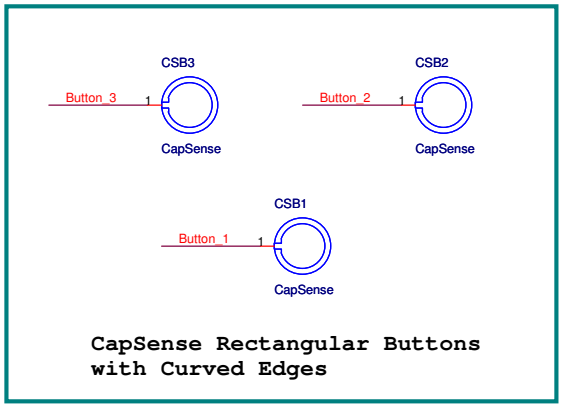

6.2 CY3218-CAPEXP1 Board Layout

The board layout for the CY3218-CAPEXP1 CapSense Express Evaluation Kit is available on the kit CD/DVD:

- PDF file: `<CD_root>\Hardware\PDCR_9458_REVSS_Layout.pdf`
- Board file: `<CD_root>\Hardware\PDCR_9458_REVSS.brd`
- Gerber file: `<CD_root>\Hardware\PDCR_9458_REVSS.zip`

6.2.1 PDCR-9458 Top Layer

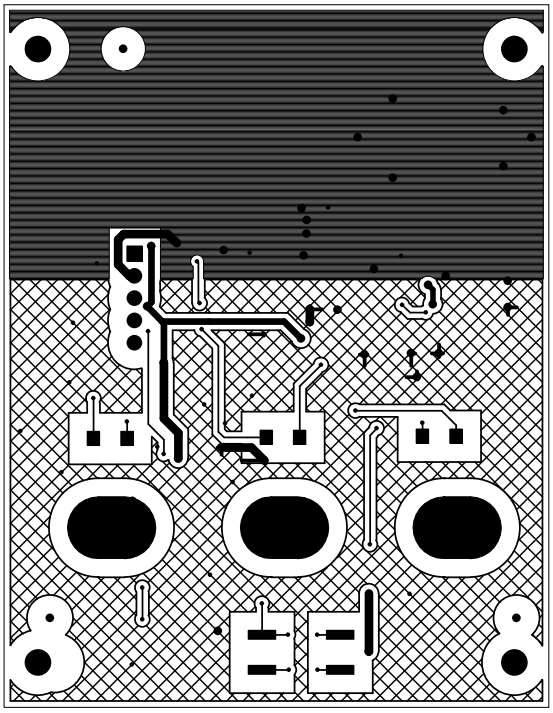

6.2.2 PDCR-9458 Bottom Layer

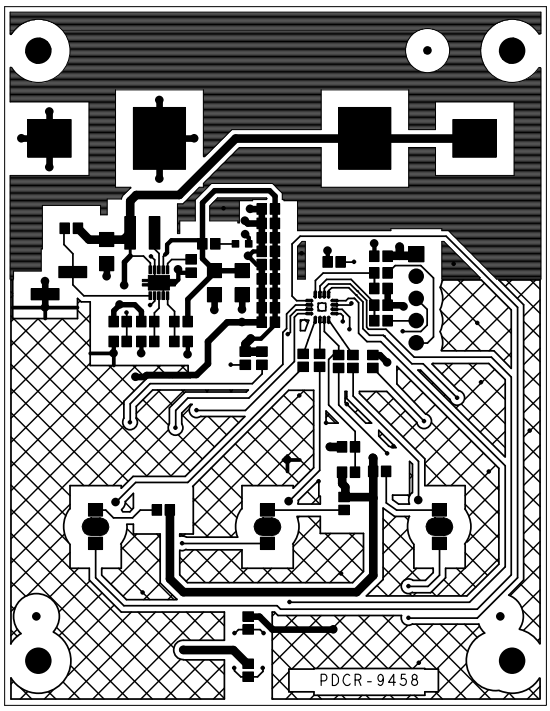

6.2.3 PDCR-9458 Top Silk Screen

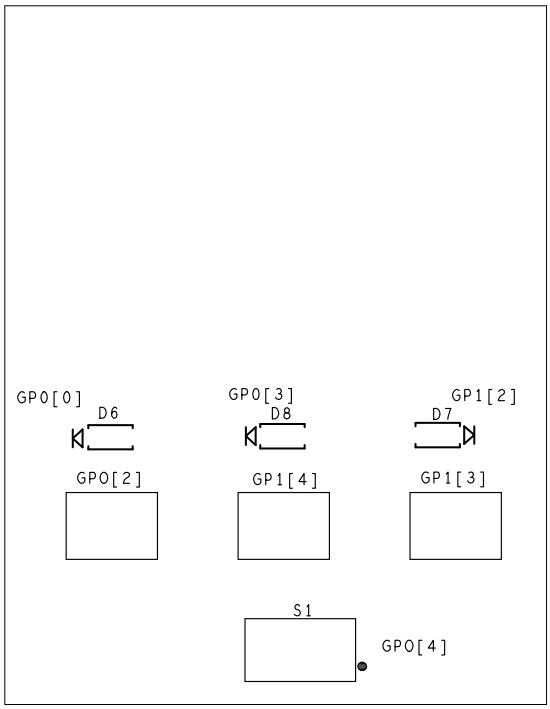

6.2.4 PDCR-9458 Bottom Silk Screen

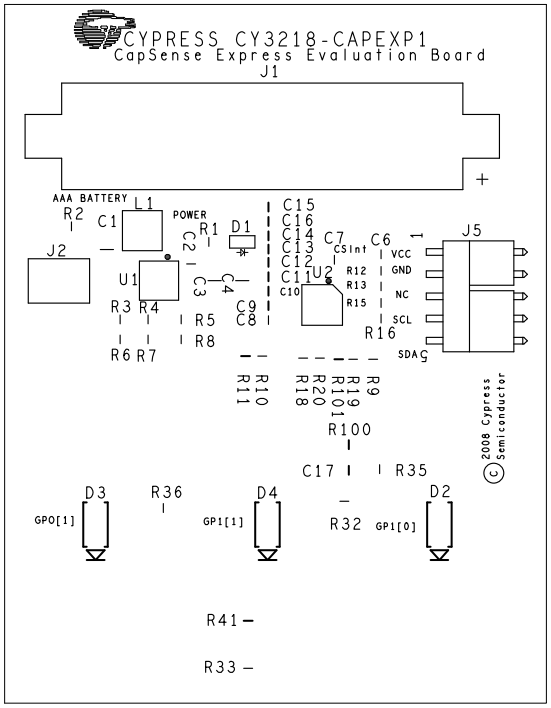

6.3 CY3218-CAPEXP1 Bill of Material (BOM)

The BOM for the CY3218-CAPEXP1 CapSense Express Evaluation Kit is available on the kit CD/DVD as an Excel file: `<CD_root>\Hardware\121R_45800_REVSS_BOM.xls`

Item	Qty	Reference	Part	Manufacturer	Mfr. Part#
1	3	CSB1,CSB2,CSB3	CapSense Button Rect Solid	Manufacturing Process	
2	3	C1,C3,C4	CAP CERAMIC 10.0UF 16V X5R 1206	Kemet	C1206C106K4PACTU
3	6	C2,C6,C8,C9,C10,C11	CAP .10UF 10V CERAMIC X7R 0603	Kemet	C0603C104K8RACTU
4	2	C7,C17	CAP NO LOAD 0603	NA	NA
5	8	C12,C13,C14,C15,C16	CAP .10UF 10V CERAMIC X7R 0603	Kemet	C0603C104K8RACTU
6	1	D1	LED RED CLEAR 0603 SMD	Lite-On Trading USA, Inc.	LTST-C190CKT
7	3	D2,D3,D4, D6, D7, D8	LED GREEN CLEAR 1206 REV MT SMD	LITE-ON INC	LTST-C230KGKT
8	3	D6, D7, D8	LED GREEN CLEAR 1206 SMD	LITE-ON INC	LTST-C150GKT
9	1	J1	CLIP BATTERY AAA/N .375X.460" SS	Keystone Electronics	55
10	1	J2	CONN HEADER 2POS .100" VERT 15AU	Molex/Waldom Electronics Corp	68301-1055
11	1	J5	CONN HEADER 5POS 0.1 RA KEYED	Molex	22-05-3051
12	1	L1	INDUCTOR 2.2UH 1.44A 20% 1607 SMD	Taiyo Yuden / Kemet	NR4018T2R2M
13	1	R1	RES 160 OHM 1/10W 1% 0603 SMD	Yageo	RC0603FR-07160RL
14	4	R2,R7,R8,R41	RES CHIP 100K OHM 1/10W 1% 0603 SMD	Yageo	RC0603FR-07100KL
15	1	R3	RES 549K OHM 1/10W 1% 0603 SMD	Yageo	RC0603FR-07549KL
16	5	R4,R13,R15,R100,R101	RES NO LOAD 0603 SMD	NA	NA
17	1	R5	RES 560K OHM 1/10W 1% 0603 SMD	Yageo	RC0603FR-07560KL
18	1	R6	RES 249K OHM 1/10W 1% 0603 SMD	Panasonic - ECG	ERJ-3EKF2493V
19	6	R9,R10,R11,R32,R35,R36	RES 68 OHM 1/16W 5% 0603 SMD	Panasonic - ECG	ERJ-3GEYJ680V
20	2	R12,R16	RES 330 OHM 1/16W 5% 0603 SMD	Panasonic - ECG	ERJ-3GEYJ331V
21	3	R18,R19,R20	RES 560 OHM 1/10W 5% 0603 SMD	Panasonic - ECG	ERJ-3GEYJ561V
22	1	R33	RES 10K OHM 1/16W 5% 0603 SMD	Panasonic - ECG	ERJ-3GEYJ103V
23	1	S1	SWITCH TACT SEAL 7.20MMx7.20MM H=4.7MM 160GF SMT	E-Switch	TL6120AF160QG
24	1	U1	IC SYNC BOOST CONV 1.3A SW ADJ 10SON	Texas Instruments	TPS61200DRCT
25	1	U2	nanoPSoC - Capsense Lite Family 16-QFN	Cypress Semiconductor	CY8C20110-LDX2I
Special Jumper Installation Instructions					
26	1		Install jumper across pins of J2	Sullins Electronics Corp.	STC02SYAN
Special Standoff Installation Instructions					
27	4		Install standoffs with screws through holes on corners such that they hold the battery terminals (on the bottom of the board) off the tabletop.	Keystone Electronics	24395
28	4			Keystone Electronics	29311

6.4 CY3218-CAPEXP1 Pin Assignment

Pin Number	Port Number	Design Function
1	GP0[0]	LED_1 (D6)
2	GP0[1]	Keypad_BKLight_3 (D3)
3	I2C SCL	I2C_Clock
4	I2C SDA	I2C_Data
5	GP1[0]	Keypad_BKLight_1 (D2)
6	GP1[1]	Keypad_BKLight_2 (D4)
7	VSS	Ground connection
8	GP1[2]	LED_3 (D7)
9	GP1[3]	Cap_Button_3
10	GP1[4]	Cap_Button_2
11	XRES	Active HIGH external reset with internal pull down
12	GP0[2]	Cap_Button_1
13	VDD	Supply voltage (3.3 V)
14	GP0[3]	LED_2 (D8)
15	CSInt	Integrating capacitor input
16	GP0[4]	Mechanical button

Revision History

Document Revision History

Document Title: CY3218-CAPEXP1 CapSense® Express™ Evaluation Kit Guide Document Number: 001-54702				
Revision	**ECN#**	**Issue Date**	**Origin of Change**	**Description of Change**
**	3187059	03/08/2011	RKPM	New kit guide for CapSense Express
*A	3277428	12/01/2011	SRVS	Updated Figure 2-1. Added content in the Hardware section. Updated the Install Software section. Updated schematics, board layout, and BOM
*B	3620227	05/17/2012	SASH	Modified installation instructions in section 3.2.2. Updated chapter 4. Minor updates throughout the guide
*C	4290899	02/25/2014	PRIA	Updated in new template. Completing Sunset Review.
*D	4755545	05/05/2015	PRIA	Updated Figure 4-1 in 4.2 Create New Project.
Distribution: Web **Posting**: None				