Connectivity kit for the Modular Hybrid Inverter user guide

About this document

Scope and purpose

The document serves as a guide for setting up and evaluating the connectivity kit for the Infineon Modular Hybrid Inverter Solution (KIT-55913-MHIWIFI). It explains the kit's features, operation, and hardware details of the board.

Intended audience

The kit is designed for users intending to use it for demonstration or evaluation purposes.

Reference board/kit

Product(s) embedded on a PCB with a focus on specific applications and defined use cases that may include software. PCB and auxiliary circuits are optimized for the requirements of the target application.

***Note**: Boards do not necessarily meet safety, EMI, or quality standards (e.g., UL, CE) requirements.*

Important notice

“Evaluation Boards and Reference Boards” shall mean products embedded on a printed circuit board (PCB) for demonstration and/or evaluation purposes, which include, without limitation, demonstration, reference and evaluation boards, kits and design (collectively referred to as “Reference Board”).

Environmental conditions have been considered in the design of the Evaluation Boards and Reference Boards provided by Infineon Technologies. The design of the Evaluation Boards and Reference Boards has been tested by Infineon Technologies only as described in this document. The design is not qualified in terms of safety requirements, manufacturing and operation over the entire operating temperature range or lifetime.

The Evaluation Boards and Reference Boards provided by Infineon Technologies are subject to functional testing only under typical load conditions. Evaluation Boards and Reference Boards are not subject to the same procedures as regular products regarding returned material analysis (RMA), process change notification (PCN) and product discontinuation (PD).

Evaluation Boards and Reference Boards are not commercialized products, and are solely intended for evaluation and testing purposes. In particular, they shall not be used for reliability testing or production. The Evaluation Boards and Reference Boards may therefore not comply with CE or similar standards (including but not limited to the EMC Directive 2004/EC/108 and the EMC Act) and may not fulfill other requirements of the country in which they are operated by the customer. The customer shall ensure that all Evaluation Boards and Reference Boards will be handled in a way which is compliant with the relevant requirements and standards of the country in which they are operated.

The Evaluation Boards and Reference Boards as well as the information provided in this document are addressed only to qualified and skilled technical staff, for laboratory usage, and shall be used and managed according to the terms and conditions set forth in this document and in other related documentation supplied with the respective Evaluation Board or Reference Board.

It is the responsibility of the customer’s technical departments to evaluate the suitability of the Evaluation Boards and Reference Boards for the intended application, and to evaluate the completeness and correctness of the information provided in this document with respect to such application.

The customer is obliged to ensure that the use of the Evaluation Boards and Reference Boards does not cause any harm to persons or third party property.

The Evaluation Boards and Reference Boards and any information in this document is provided "as is" and Infineon Technologies disclaims any warranties, express or implied, including but not limited to warranties of non-infringement of third party rights and implied warranties of fitness for any purpose, or for merchantability.

Infineon Technologies shall not be responsible for any damages resulting from the use of the Evaluation Boards and Reference Boards and/or from any information provided in this document. The customer is obliged to defend, indemnify and hold Infineon Technologies harmless from and against any claims or damages arising out of or resulting from any use thereof.

Infineon Technologies reserves the right to modify this document and/or any information provided herein at any time without further notice.

Safety precautions

Safety precautions

***Note**: Please note the following warnings regarding the hazards associated with development systems.*

Table 1 Safety precautions

	**Warning:** *The DC link potential of this board is up to 1000 V or more. When measuring voltage waveforms by oscilloscope, high voltage differential probes must be used. Failure to do so may result in personal injury or death.*
	**Warning:** *The evaluation or reference board contains DC bus capacitors which take time to discharge after removal of the main supply. Before working on the drive system, wait five minutes for capacitors to discharge to safe voltage levels. Failure to do so may result in personal injury or death. Darkened display LEDs are not an indication that capacitors have discharged to safe voltage levels.*
	**Warning:** *The evaluation or reference board is connected to the grid input during testing. Hence, high-voltage differential probes must be used when measuring voltage waveforms by oscilloscope. Failure to do so may result in personal injury or death. Darkened display LEDs are not an indication that capacitors have discharged to safe voltage levels.*
	**Warning:** *Remove or disconnect power from the drive before you disconnect or reconnect wires, or perform maintenance work. Wait five minutes after removing power to discharge the bus capacitors. Do not attempt to service the drive until the bus capacitors have discharged to zero. Failure to do so may result in personal injury or death.*
	**Caution:** *The heat sink and device surfaces of the evaluation or reference board may become hot during testing. Hence, necessary precautions are required while handling the board. Failure to comply may cause injury.*
	**Caution:** *Only personnel familiar with the drive, power electronics and associated machinery should plan, install, commission and subsequently service the system. Failure to comply may result in personal injury and/or equipment damage.*
	**Caution:** *The evaluation or reference board contains parts and assemblies sensitive to electrostatic discharge (ESD). Electrostatic control precautions are required when installing, testing, servicing or repairing the assembly. Component damage may result if ESD control procedures are not followed. If you are not familiar with electrostatic control procedures, refer to the applicable ESD protection handbooks and guidelines.*
	**Caution:** *The evaluation or reference board is shipped with packing materials that need to be removed prior to installation. Failure to remove all packing materials that are unnecessary for system installation may result in overheating or abnormal operating conditions.*

Table of contents

About this document . . . 1
Important notice . . . 2
Safety precautions . . . 3
Table of contents . . . 4
1 Introduction . . . 6
1.1 Kit contents . . . 7
1.2 Board details . . . 8
1.2.1 Baseboard (KIT-55913-PROTO) . . . 8
1.2.2 Shield board (SHLD-55913-MHIWIFI) . . . 13
2 Kit operation . . . 14
2.1 Modular Hybrid Inverter design platform overview . . . 14
2.2 Theory of operation . . . 14
2.2.1 Control board (REF-CLBXMC7PEC) . . . 15
2.2.2 Power boards . . . 16
2.2.2.1 HERIC power board . . . 16
2.2.2.2 NPC2 power board . . . 17
2.3 Getting started with the connectivity kit . . . 18
2.3.1 Prerequisites . . . 18
2.3.2 Getting started . . . 18
2.4 Dashboard . . . 20
2.4.1 Accessing the dashboard . . . 20
2.4.1.1 Opening the deployed dashboard . . . 21
2.4.1.2 New dashboard setup and configuration (Optional) . . . 22
2.4.1.2.1 Prerequisites . . . 22
2.4.1.2.2 Setting up a new dashboard . . . 22
2.4.1.2.3 Provisioning the Wi-Fi credentials . . . 23
2.4.1.2.4 Provisioning the device name . . . 23
2.4.1.2.5 Provisioning the MQTT certificates . . . 23
2.4.1.2.6 Provisioning the MQTT endpoint . . . 24
2.4.2 Navigating the dashboard application . . . 24
2.4.2.1 Overview . . . 24
2.4.2.2 Devices . . . 25
2.4.2.3 Firmware Update . . . 27
2.4.2.4 Information . . . 28
2.5 Customizing the firmware . . . 28
2.5.1 Creating a project and programming/debugging using ModusToolbox™ . . . 28
3 Hardware . . . 31
3.1 Design files . . . 31

Table of contents

3.2 Baseboard (KIT-55913-PROTO) . . . 31
3.2.1 CYW55913 device . . . 31
3.2.2 Board power distribution system . . . 32
3.2.2.1 Current measurement . . . 35
3.2.3 I/O assignments . . . 35
3.2.4 UART selection . . . 36
3.2.5 Adafruit-compatible headers . . . 37
3.2.6 Reset and Recover button . . . 37
3.2.7 User LEDs . . . 37
3.2.8 User button . . . 38
3.2.9 OPTIGA™ Trust M . . . 39
3.2.10 Flash . . . 39
3.2.11 PSOC™ 5 LP-based KitProg3 programmer and debugger . . . 39
3.3 Shield board (SHLD-55913-MHIWIFI) . . . 41
3.3.1 SPI header . . . 42
3.3.2 Power supply headers . . . 42
3.4 Bill of materials . . . 43

References . . . 52

Revision history . . . 53

Trademarks . . . 54

Disclaimer . . . 55

1 Introduction

A hybrid inverter is a device that combines the functionality of a solar inverter and a battery inverter into a single unit. It efficiently manages power from solar panels, batteries, and the grid, making it suitable for both grid-tied and off-grid systems. Hybrid inverters can store excess solar energy, supply it during power outages, and even export unused power back to the grid.

Hybrid inverters enable greater self-consumption while reducing the materials, space, and complexity required to build photovoltaic (PV) systems. These inverters not only connect multiple PV panels and convert the generated direct current (DC) into alternating current (AC) but also supply DC power directly to an energy storage system (ESS), such as a battery. By integrating the ESS, hybrid inverters minimize unnecessary power conversions, reducing energy losses.

Infineon offers a comprehensive range of modular solutions for hybrid inverters, covering power, sensing, control, and connectivity.

The connectivity kit for the Modular Hybrid Inverter (KIT-55913-MHIWIFI) is a connectivity solution designed to enable internet connectivity for the Modular Hybrid Inverter (MHI) platform from Infineon. It allows users to evaluate, prototype, and develop a wide range of Internet of Things (IoT) applications using AIROC™ CYW55913, an ultra-low-power, single-chip connected MCU. The kit is complemented by a dashboard that facilitates data sharing between the inverter and the user over the web, providing options for remote control.



Figure 1 Connectivity kit for the Modular Hybrid Inverter (KIT-55913-MHIWIFI)

The following Infineon products are used to build this solution:

- Wireless connectivity with a connected MCU (AIROC™ CYW55913 Wi-Fi and Bluetooth® Low Energy (LE) connected MCU)
- PSOC™ 5LP Arm® Cortex®-M3 microcontroller as an onboard debugger (CY8C5868LTI)
- Security controller (OPTIGA™ Trust M SLS32AIA)
- Memory (Quad SPI NOR Flash S25FS128S)
- Power regulators (Buck-boost IR3823A and LDO TLS205B0)
- ESD and surge protection diodes and small-signal transistors

1.1 Kit contents

The kit box includes the following:

- Baseboard (KIT-55913-PROTO)
- Shield board (SHLD-55913-MHIWIFI)
- 1x 5-pin connector cable
- 2x 2-pin connector cables
- Quick start guide

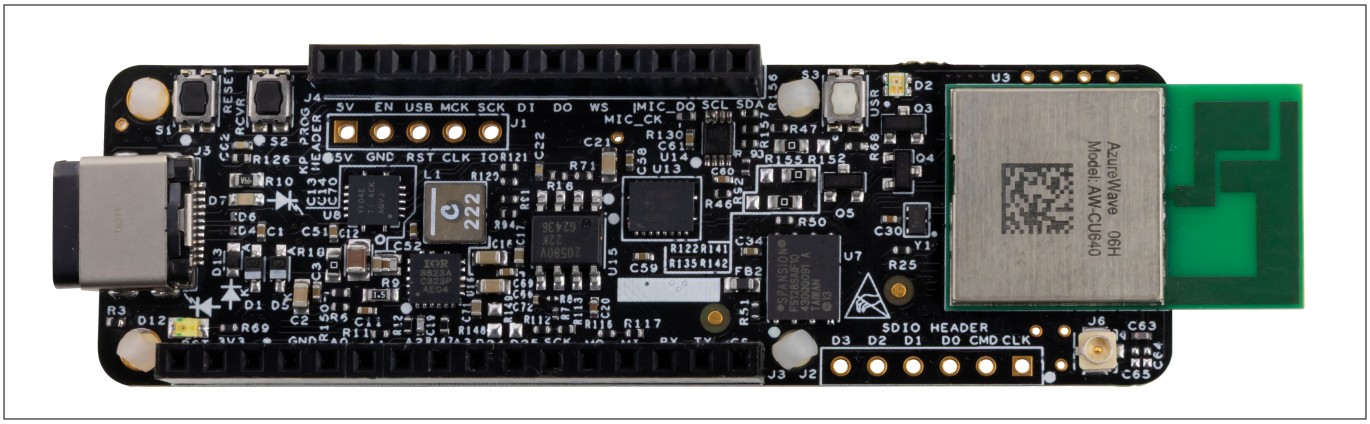

Figure 2 Baseboard (KIT-55913-PROTO)

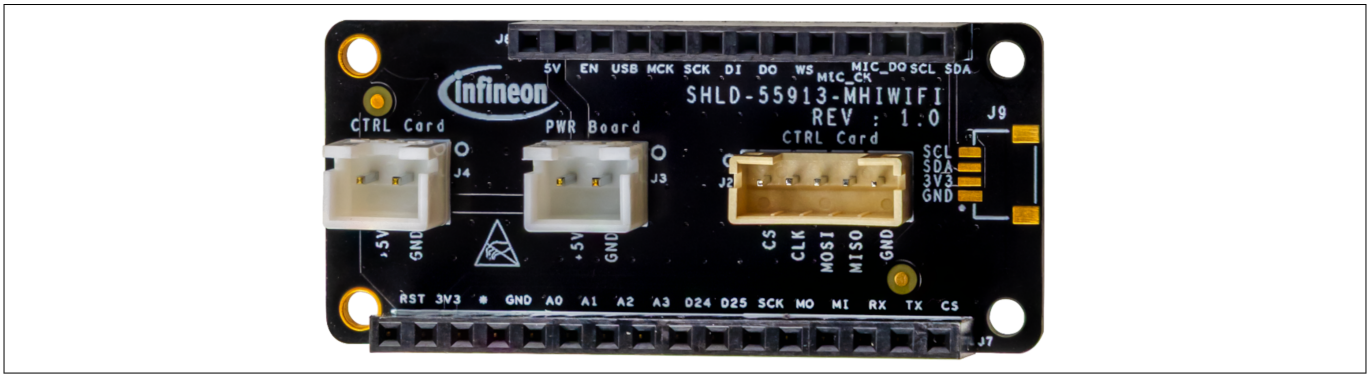

Figure 3 Shield board (SHLD-55913-MHIWIFI)

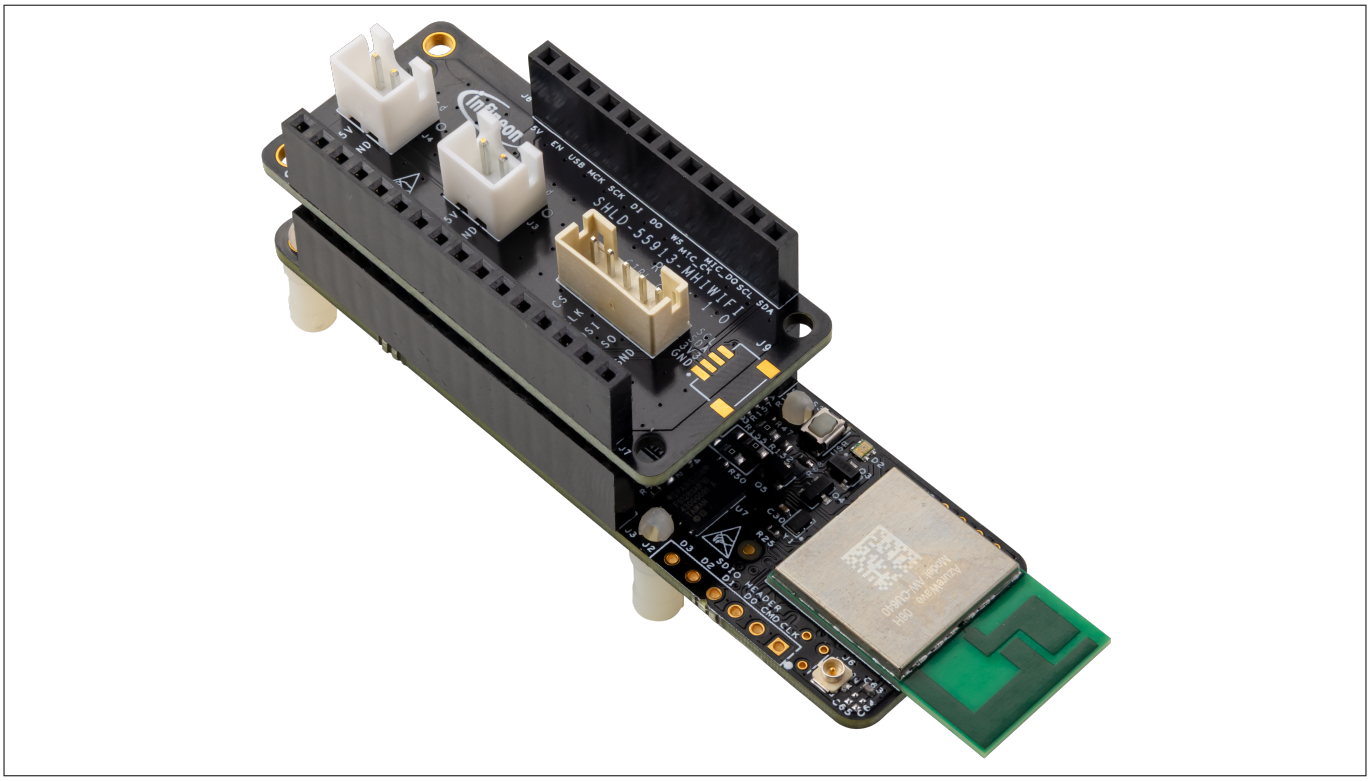

Figure 4 Stackup of the shield board mounted on the baseboard

1.2 Board details

The KIT-55913-MHIWIFI kit consists of two boards:

1. **Baseboard (KIT-55913-PROTO)**: The baseboard serves as the main board and controls all operations related to wireless connectivity, serial communication, hardware security, and more
2. **Shield board (SHLD-55913-MHIWIFI)**: The shield board provides an efficient way to connect the connectivity kit with the Infineon Modular Hybrid Inverter platform. It facilitates SPI communication and power distribution

Additional details on these two boards are provided in the following sections.

1.2.1 Baseboard (KIT-55913-PROTO)

The baseboard (KIT-55913-PROTO) is built around the CYW55913 device. The block diagram of the CYW55913 device is shown in Figure 5. See the device datasheet for more details on its features. CYW55913 is implemented on this baseboard using the AzureWave connectivity module, CU-640.

CYW55913 is an ultra-low-power, single-chip, connected MCU that supports 1x1 Wi-Fi 6/6E, Bluetooth® LE 5.4, Matter, IP networking, and includes an integrated PMU. It is designed for Internet of Things (IoT) applications, enabling standalone operation or offloading tasks from a host processor. An integrated 192 MHz Arm® Cortex®-M33 processor runs the Wi-Fi and networking stacks, Bluetooth® LE 5.4 functionality, and supports a wide variety of peripherals. The device operates in a temperature range of -40°C to +85°C and is available in a 0.35-mm pitch WLBGA package.

1 Introduction

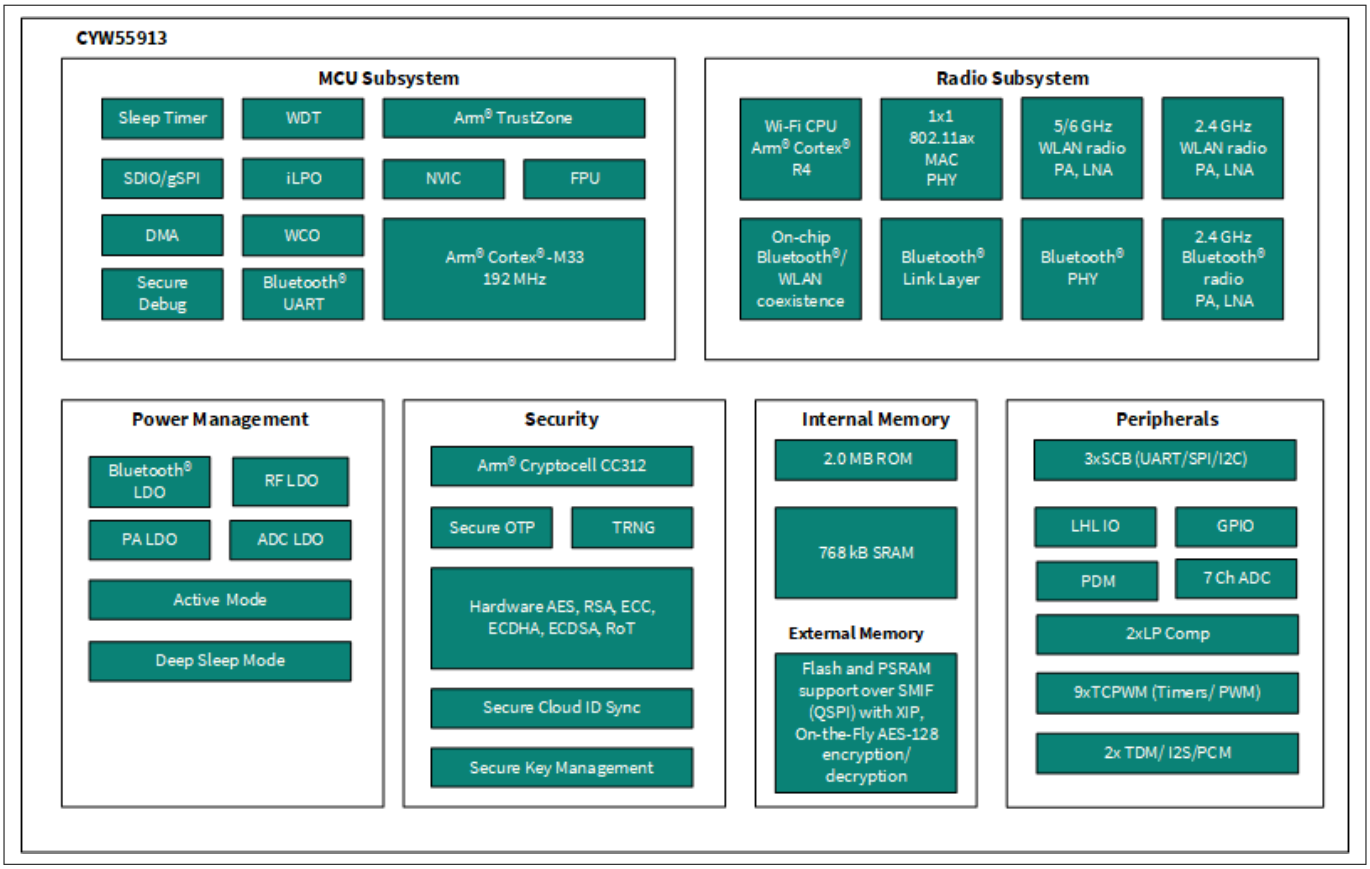

Figure 5 CYW55913 block diagram

The baseboard includes the following major components:

- **AzureWave CU-640 connectivity module**: Based on Infineon's AIROC™ CYW55913 connected MCU. The module includes an on-module PCB antenna and supports switching to an external antenna connector on the baseboard
- **Adafruit Feather-compatible I/O headers**: For easy interfacing with a variety of wing boards
- **Onboard programming and debug support**: Using KitProg3
- **External QSPI NOR flash and PSRAM memories**: To extend the application's capabilities
- **Onboard USB Type-C connector (J5)**: Used to program and debug the firmware. It also provides power to the board
- **OPTIGA™ Trust M security controller**: Enables hardware-based security operations and provides secure storage for sensitive information such as credentials

Figure 6 shows the block diagram of the baseboard (KIT-55913-PROTO) of the connectivity kit.

1 Introduction

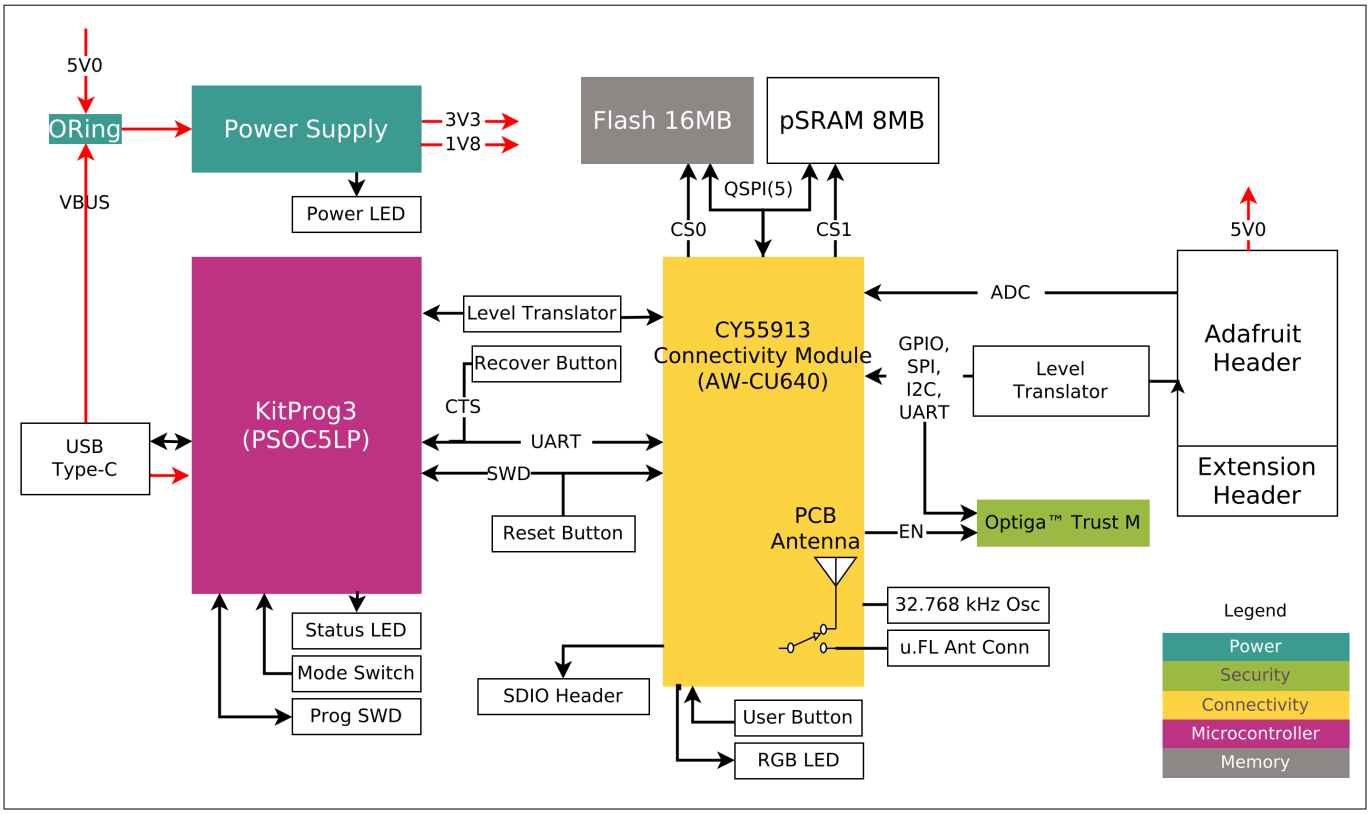

Figure 6 Functional block diagram of baseboard (KIT-55913-PROTO)

1 Introduction

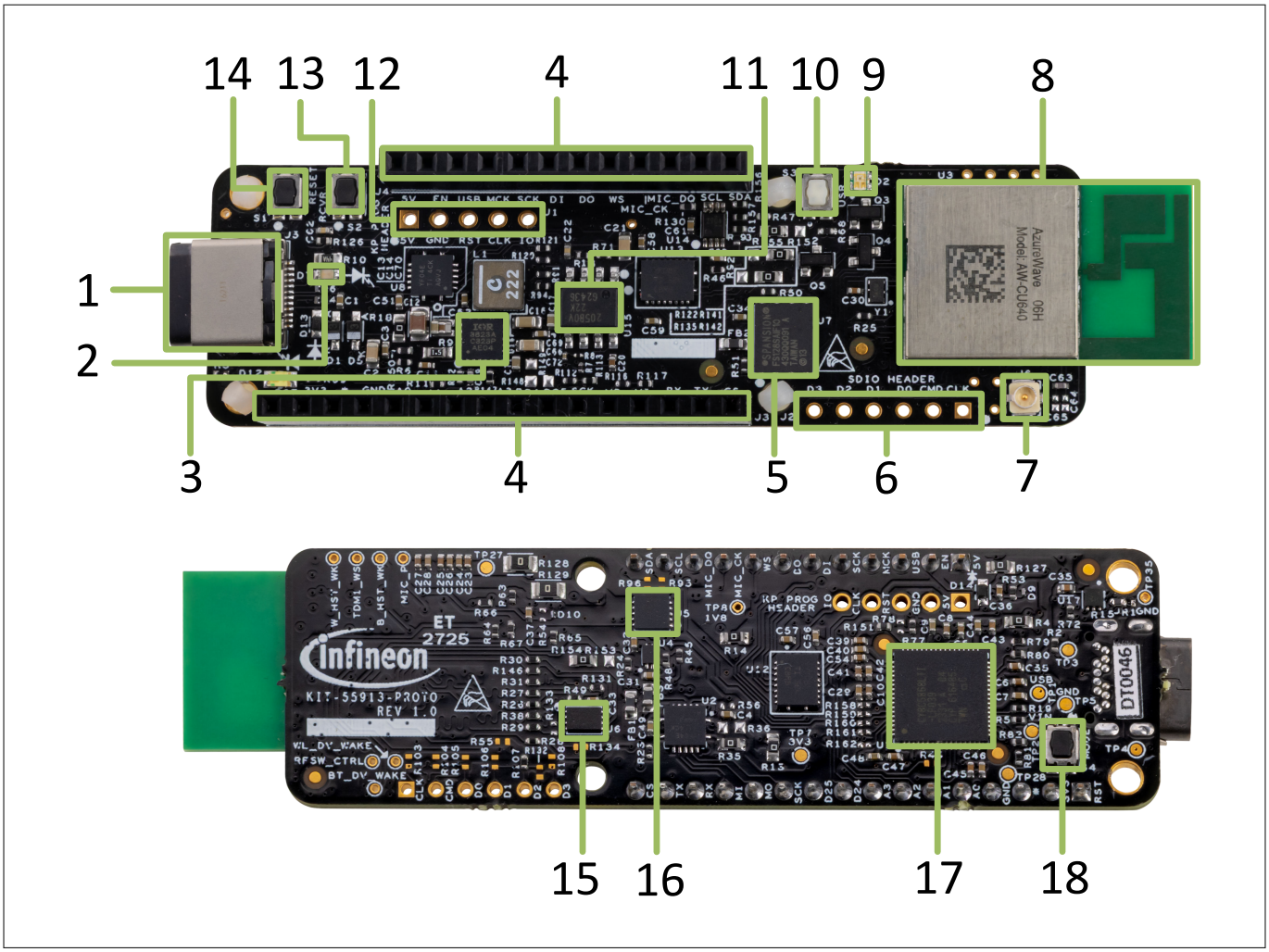

Figure 7 Baseboard (KIT-55913-PROTO) details

The baseboard contains the following components:

1. KitProg3 USB-C connector (J5)
2. Power LED (D7)
3. 3.3 V buck regulator (IR3823AMTRPBF, U16)
4. Adafruit-compatible GPIO headers (J3, J4)
5. External flash (S25FS128SAGNFI103, U7)
6. SDIO header (J2)
7. External radio antenna connector (J6)
8. CYW55913 connectivity module (AzureWave AW-CU640, U3)
9. User RGB LED (D2)
10. User button (S3)
11. 1.8 V LDO (TLS205B0EJV, U15)
12. KitProg3 programming header (J1)
13. Recovery button (S2)
14. Reset button (S1)
15. PSRAM (U6)
16. OPTIGA™ Trust M security module (SLS32AIA010MLUSON10XTMA2, U5)
17. KitProg3 (PSOC™ 5LP) programmer and debugger (CY8C5868LTI-LP039, U1)
18. KitProg3 programming mode selection button (S4)

Figure 8 shows the pinout of the baseboard.

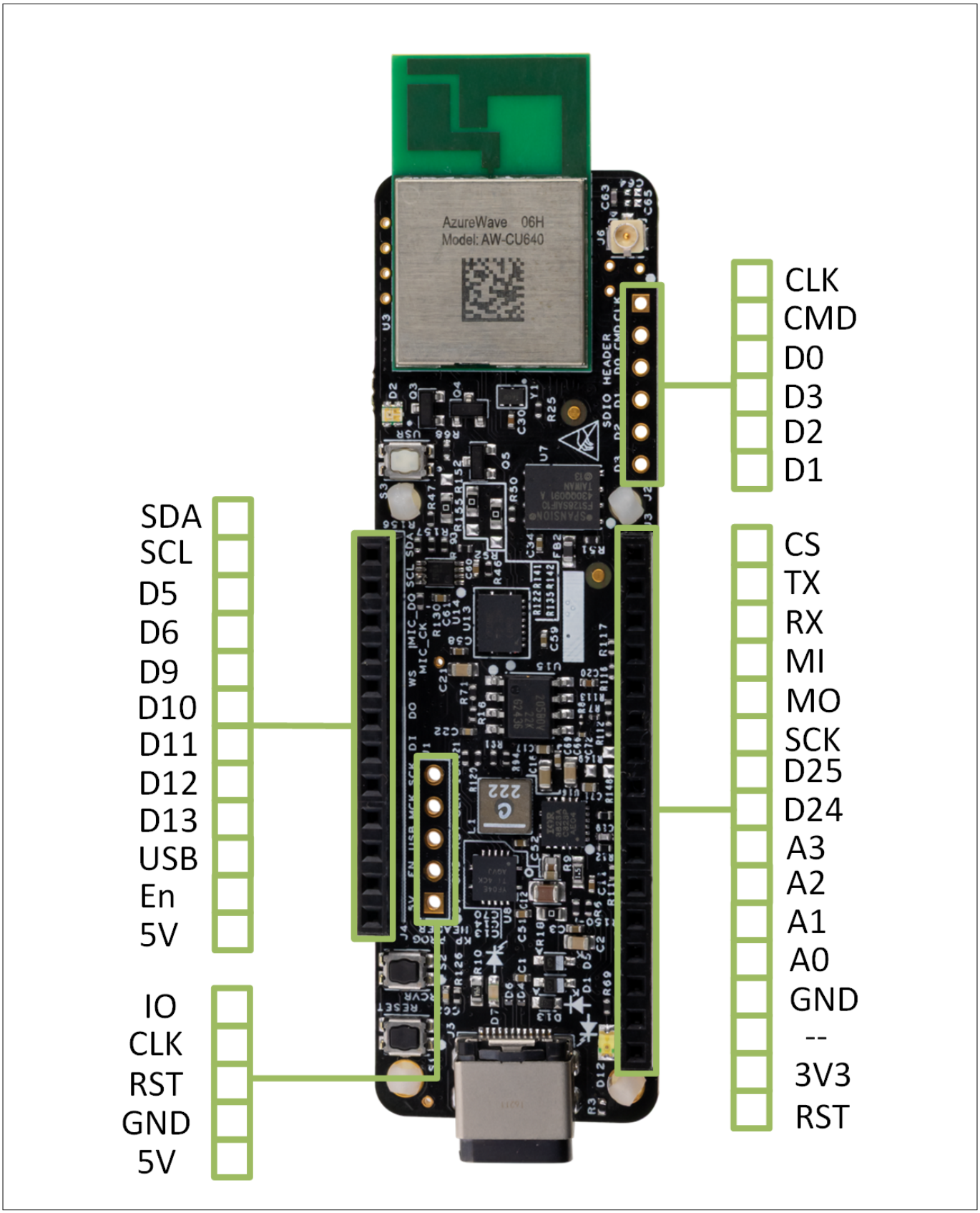

Figure 8 Pinout of the baseboard (KIT-55913-PROTO)

1.2.2 Shield board (SHLD-55913-MHIWIFI)

The shield board is designed with the Adafruit FeatherWing form factor. It provides a connector interface for SPI communication and power distribution, enabling connection to the control board and power board of the modular hybrid inverter.

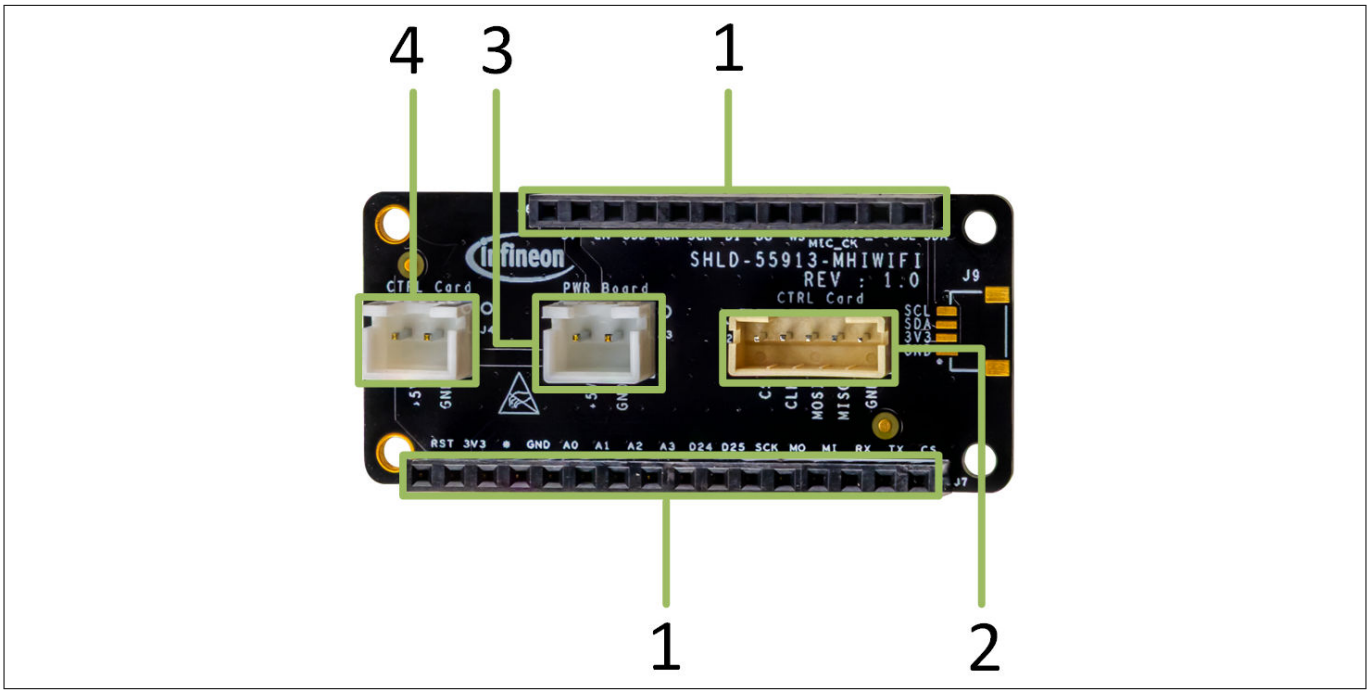

Figure 9 Shield board (SHLD-55913-MHIWIFI)

The shield board includes the following components:

1. Adafruit Feather-compatible GPIO headers (J7, J8)
2. SPI communication header (J2)
3. Power board connector (J3)
4. Control board connector (J4)

2 Kit operation

2.1 Modular Hybrid Inverter design platform overview

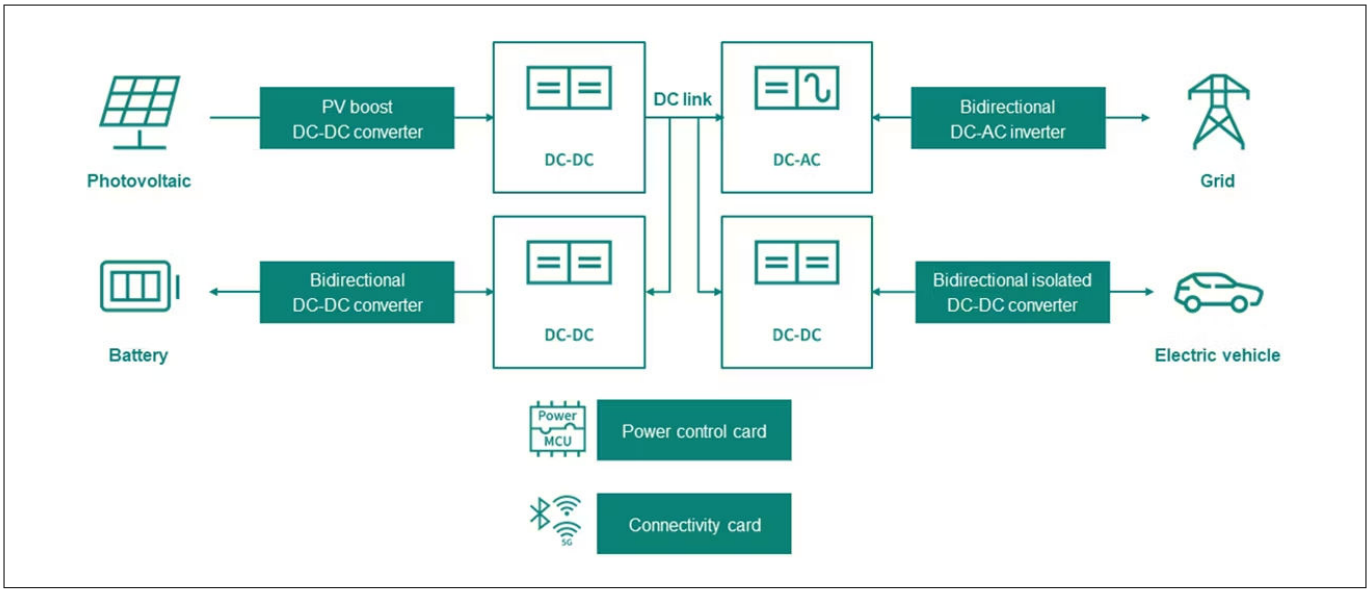

Figure 10 Modular Hybrid Inverter design platform overview

Infineon has developed a modular set of power conversion, control, and connectivity blocks to enable fast prototyping of residential and small commercial hybrid inverter solutions.

Customers can select and combine advanced connectivity options, such as the AIROC™ CYW55913 Wi-Fi 6E 1x1 tri-band Wi-Fi and Bluetooth® Low-Energy 5.4 connected MCU, to design smart, connected systems. Additionally, cutting-edge technologies like TRENCHSTOP™ IGBT H7 or CoolSiC™ MOSFETs, available in innovative packages such as QDPAK, allow for the creation of various topologies, including HERIC or NPC2. These solutions ensure maximum efficiency while achieving the lowest cost per kilowatt, eliminating the trade-off between performance and affordability.

2.2 Theory of operation

This section provides an overview of the operation of the modular hybrid inverter solution and its supported applications. It also includes detailed instructions for setting up the connectivity kit (KIT-55913-MHIWIFI) with ModusToolbox™ for hybrid inverter applications. Additionally, it introduces the features used in the kit's operation.

For a complete connectivity experience, the following components are required:

- Connectivity kit for the Modular Hybrid Inverter (KIT-55913-MHIWIFI)
- Control board (REF-CLBXMC7PEC)
- Appropriate power boards, such as the REF-10KW3LNPC2 or REF-6KWHERIC boards

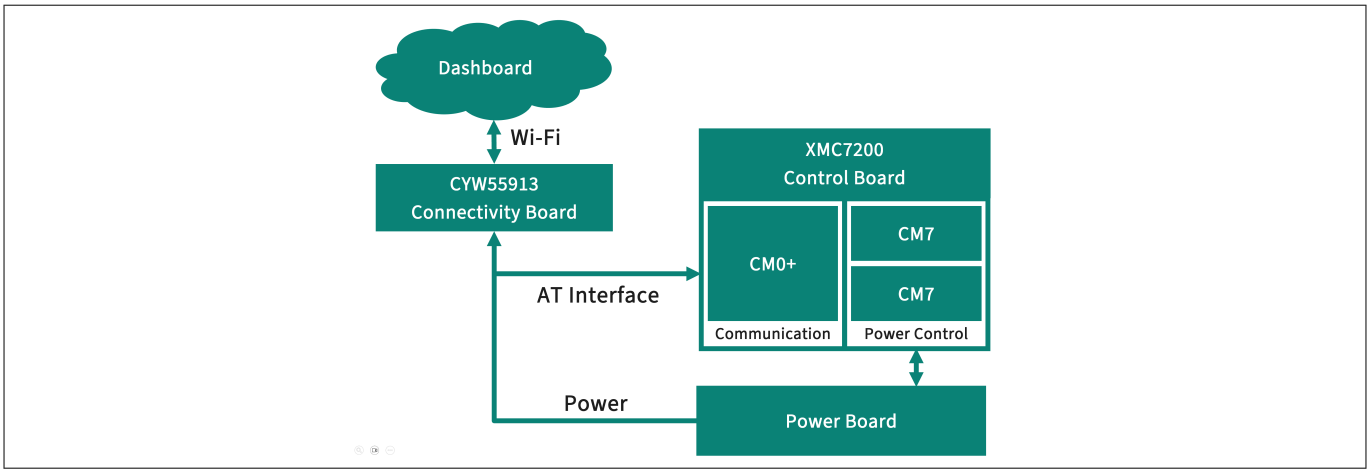

Figure 11 System architecture of a connected modular hybrid inverter

2.2.1 Control board (REF-CLBXMC7PEC)

REF-CLBXMC7PEC is a control board designed to operate with various power-conversion topologies and conditions. It can interface with a wide range of signals and provides outputs for controlling complex power converter systems.

This board is ideal for designers developing their own software, as it enables rapid and efficient prototyping of power-conversion boards.

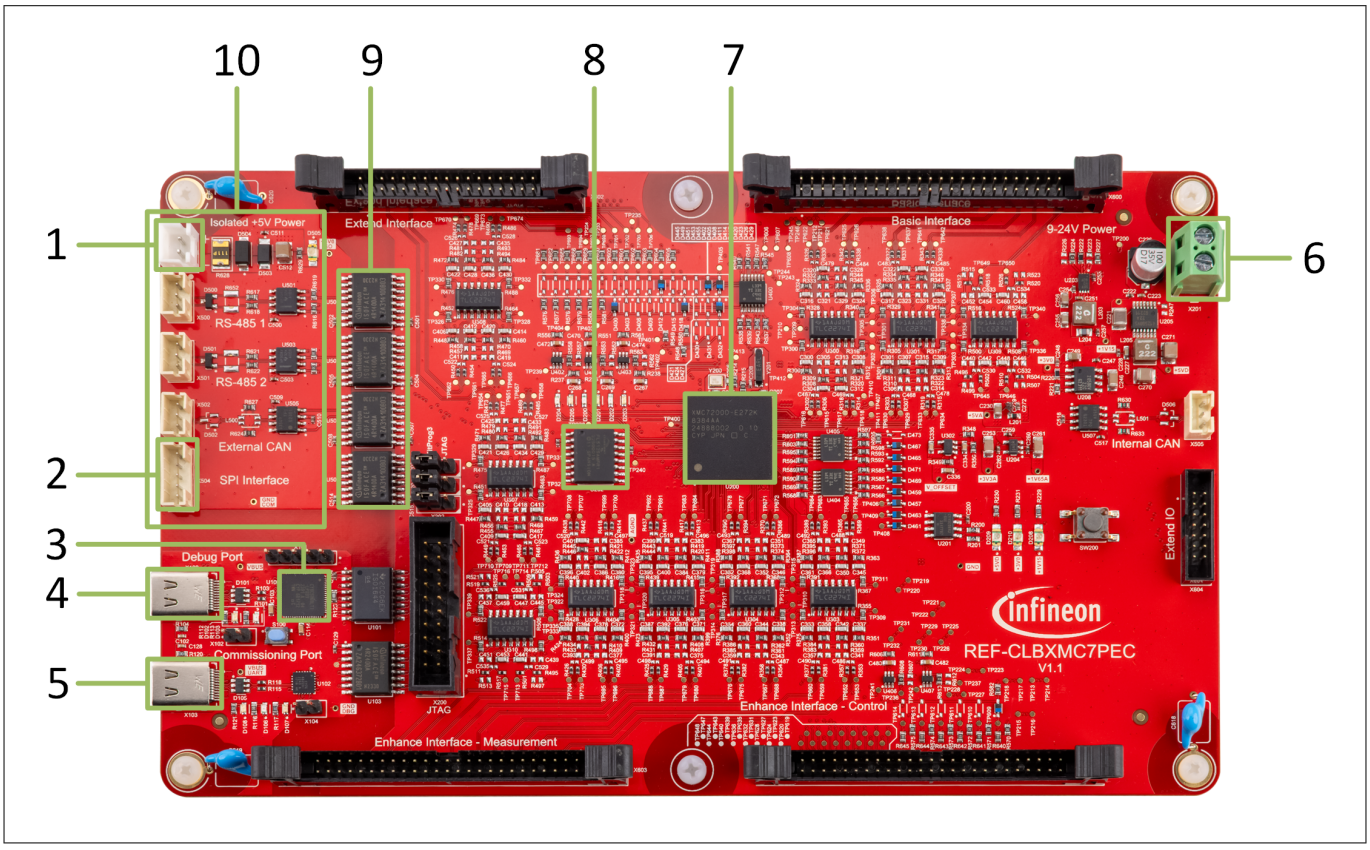

Figure 12 Control board (REF-CLBXMC7PEC)

The control board has the following components:

1. 5 V isolated power connector to power the serial communication block (X503)
2. SPI header (X504)

3. KitProg3 (PSOC™ 5LP) programmer and debugger (CY8C5868LTI-LP039, U100)
4. USB debug Type-C connector (X100)
5. Commissioning port Type-C connector (X103)
6. Power adapter connector (X201)
7. 32-bit Arm® Cortex®-M7 MCU (XMC7200D-E272K8384AA, U200)
8. 512 Mb (64 MB) FL-S Flash (S25FL512SAGMFMR10, U202)
9. Digital isolators (U500, U502, U504, U506)
10. Serial communication block

See the Control board webpage for more details.

2.2.2 Power boards

2.2.2.1 HERIC power board

The HERIC power board (REF-6KWHERIC) reference design is available as a kit. It includes different boards that assist in building and operating an inverter power stage:

- **REF-6KWHERIC**: Inverter power stage main board
- **PB-APS-24V-5V ISO**: Isolated auxiliary power supply

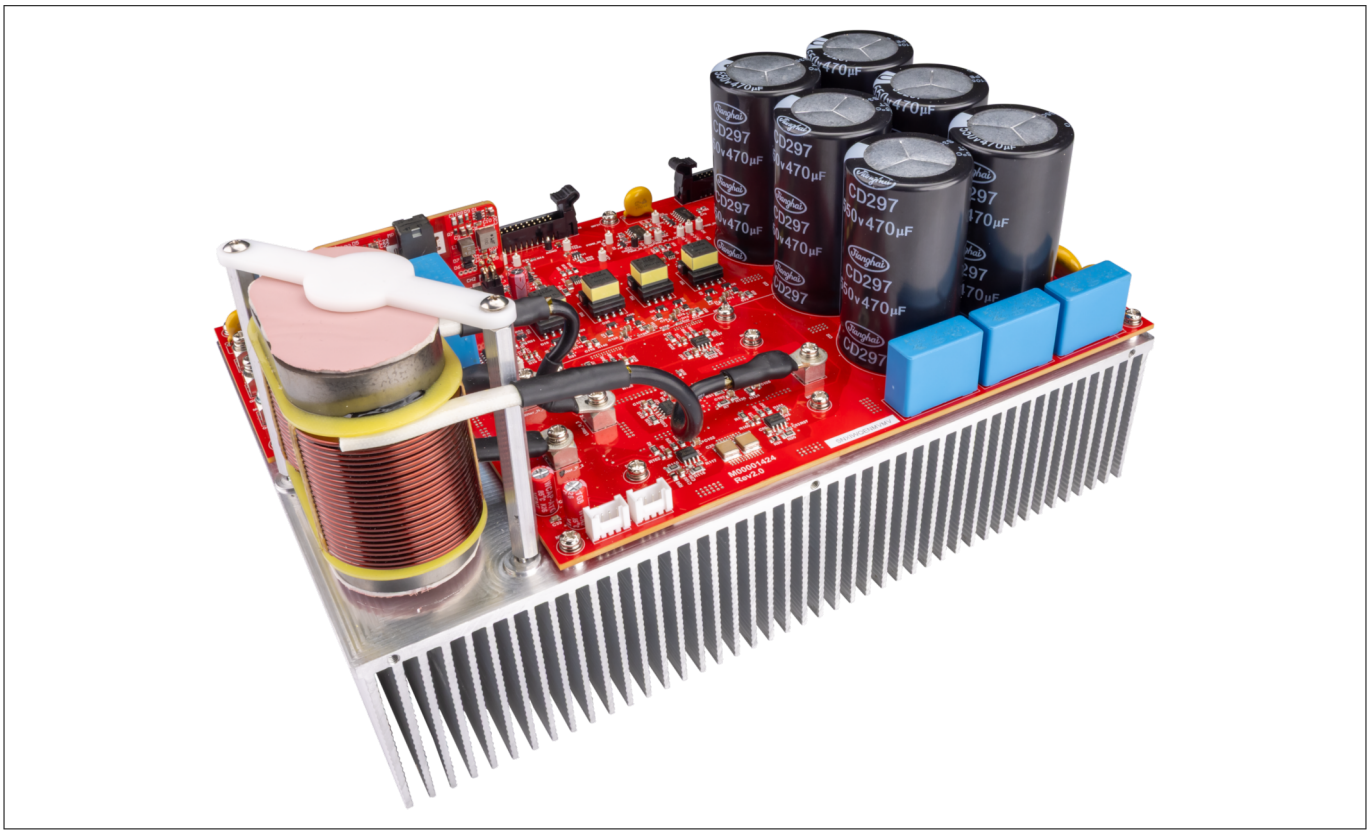

Figure 13 Power conversion reference design REF-6KWHERIC

Figure 13 shows the fully assembled 6 kW HERIC reference design.

The REF-6KWHERIC main board consists of a single-phase power stage based on the HERIC topology. It includes power semiconductors, gate drivers, an auxiliary power supply, and filter elements such as DC-link capacitors, output inductors, and output capacitors. This topology is highly efficient because additional MOSFETs are used to manage the freewheeling current when the H-bridge MOSFETs are off.

Table 2 Top-level specifications for HERIC

Parameter	Typical	Maximum	Unit
Input voltage	380	510	V_{dc}
Output voltage	230	-	V_{rms}
Output current	27	-	A
Output power	-	6	kW
Switching frequency	50	-	kHz
Output frequency	50/60	-	Hz

See the REF-6KWHERIC board page for more details.

2.2.2.2 NPC2 power board

The NPC2 power board (REF-10KW3LNPC2) is available as a kit and includes various boards to help users build and operate an NPC2 inverter power stage:

- **REF-10KW3LNPC2**: NPC2 inverter power stage main board
- **ISODRV-3240C4P15N05-1**: 4-channel gate driver boards for each leg of the NPC2 topology
- **PB-APS-24 V-5 V ISO**: Isolated auxiliary power supply
- **REF-10KW3LNPC2-Filter**: LCL filter board
- **PB-CAPTANK-1.1 KV**: DC-link capacitor board

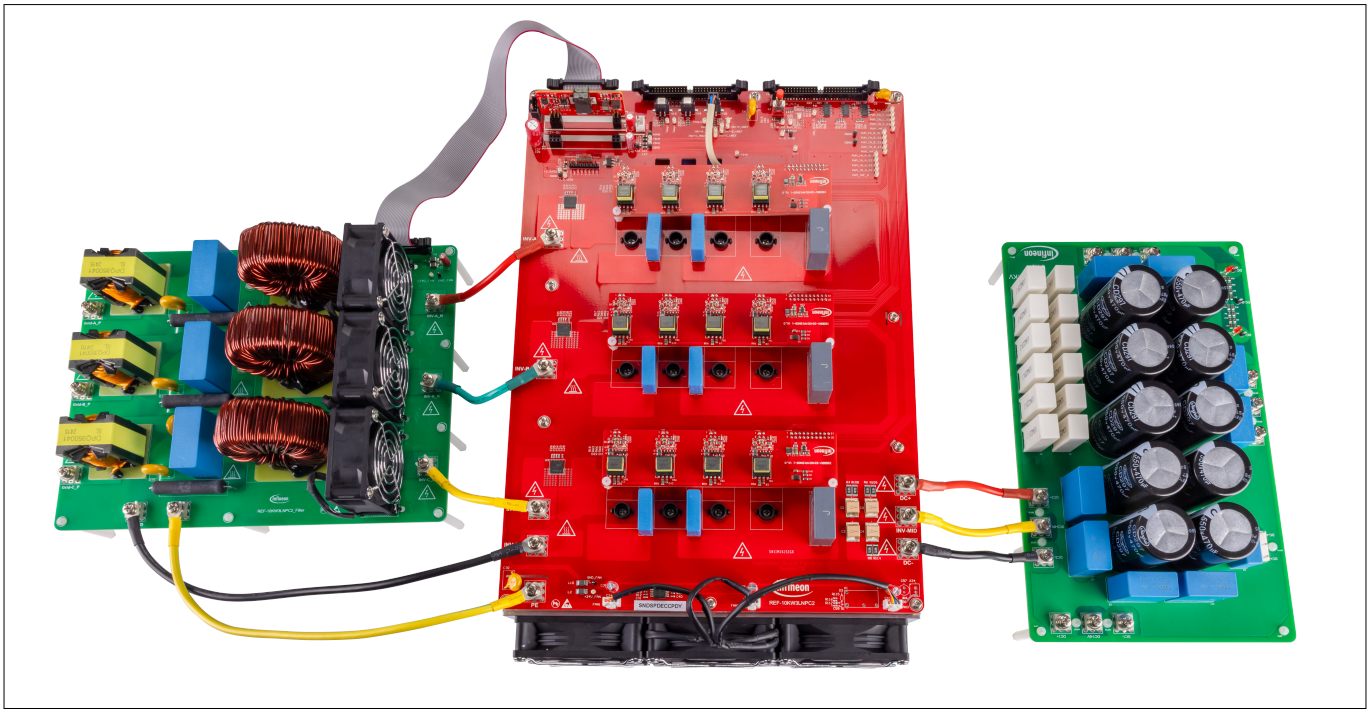

Figure 14 Power conversion reference design REF-10KW3LNPC2

The REF-10KW3LNPC2 main board consists of a 3-phase, 3-level NPC2 power stage. It includes power semiconductors, gate drivers, and an auxiliary power supply. The board also provides connectors that allow users to attach their own passive components, such as filters and DC-link capacitors.

Table 3 Top-level specifications for NPC2

Parameter	Typical	Maximum	Unit
Input voltage	650	850	V_{dc}
Output voltage	380	400	$V_{ll\text{-}rms}$
Output current	-	15.2	A
Output power	-	10	kW
Switching frequency	24	24	kHz
Output frequency	50	65	Hz

See the REF-10KW3LNPC2 board page for more details.

2.3 Getting started with the connectivity kit

2.3.1 Prerequisites

Before you begin, ensure you have the following:

- Control board (REF-CLBXMC7PEC)
- An appropriate power board (the kit supports NPC2 and HERIC power boards)
- A Wi-Fi network or hotspot with the following default credentials:
  - **SSID**: IFX_TEST_AP
  - **Password**: 12345678

2.3.2 Getting started

To get started with the out-of-box experience for the kit, do the following:

1. Align the shield board with the **Adafruit header** on the baseboard and mount it on top of the baseboard
2. Connect the connectivity kit's **PWR board header (J3)** to the power board of the hybrid inverter. Alternatively, use another power source capable of supplying 5 V and 1 A
3. Program the control board with the appropriate power stage firmware. The firmware binaries are available in the Infineon Developer Center - Firmware binaries page
4. Connect the **SPI connector (J2)** on the connectivity kit to the **SPI interface connector (X504)** on the control board
5. Use a **Type-C USB cable** to connect the KitProg3 Type-C connector to your PC for obtaining debug logs
   - For the connectivity kit, connect a USB cable to **J5** (USB Type-C connector). The serial port will appear as **Peripheral UART**
   - For the control board, connect a USB cable to **X100** (USB Type-C connector). The serial port will appear as **KitProg3 USB-UART**

2 Kit operation

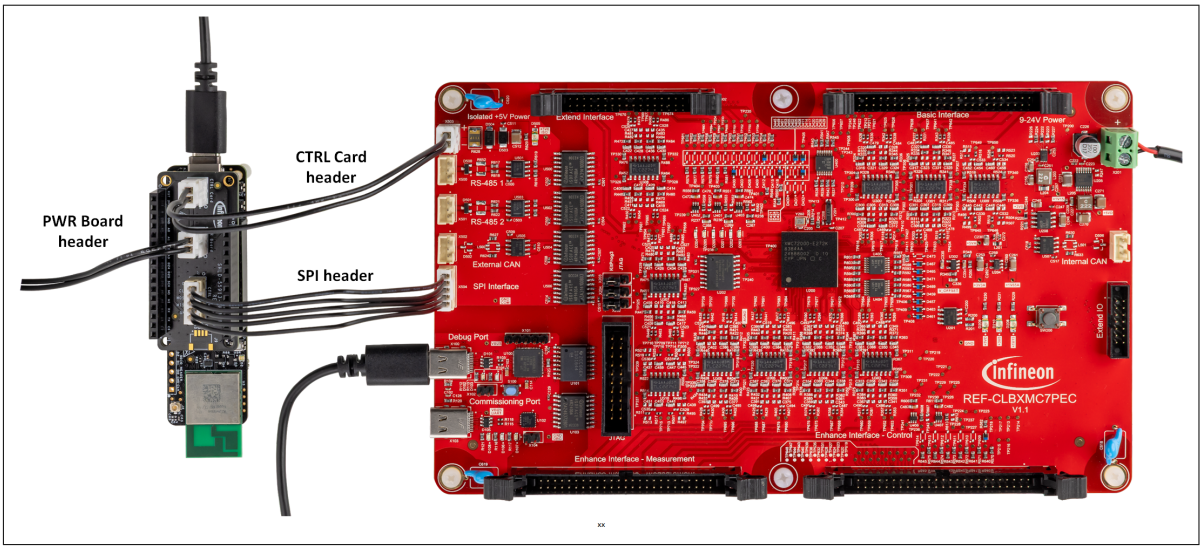

Figure 15 Connectivity kit connected to control card

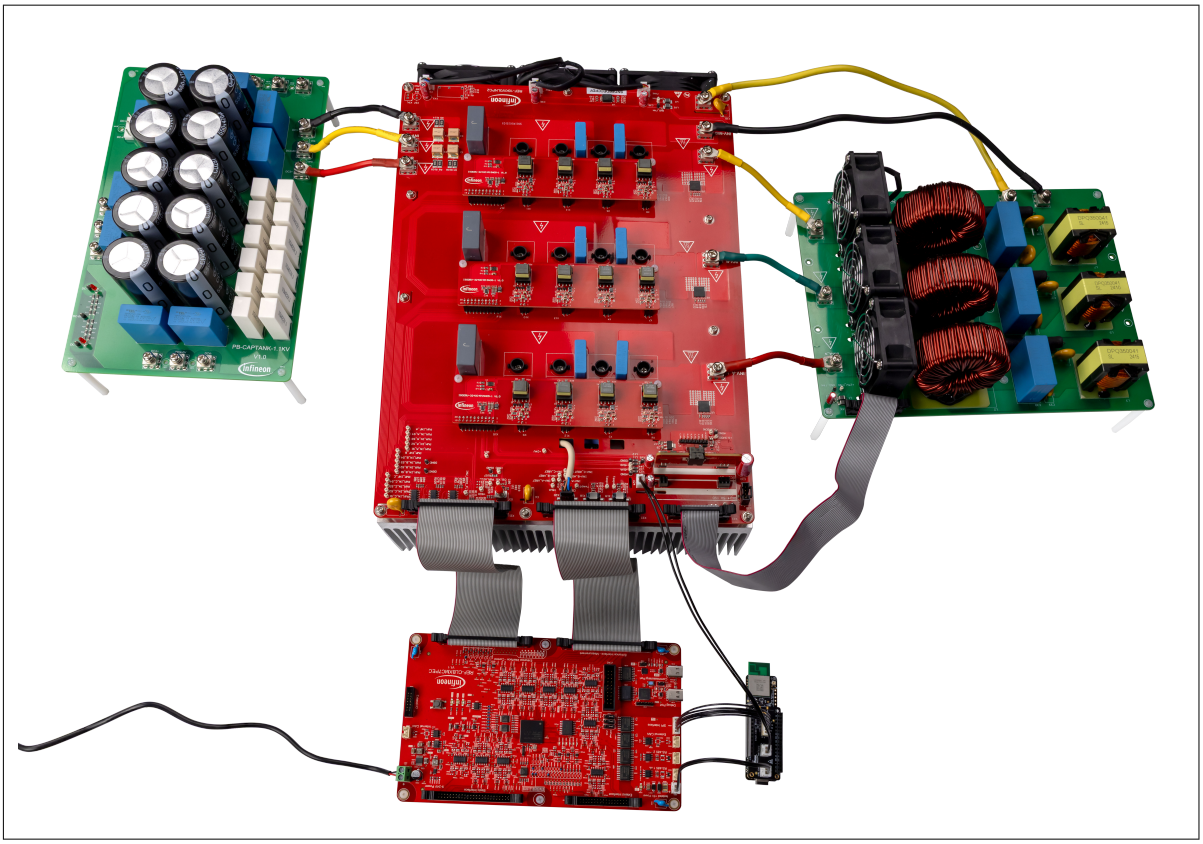

Figure 16 Full system view

6. Use a serial terminal software (for example, Tera Term) to connect to the respective kit's serial port with the settings below:
   - **Speed/Baud rate**: 115200
   - **Data**: 8 bits
   - **Parity**: None
   - **Stop bit**: 1 bit
   - **Flow control**: None

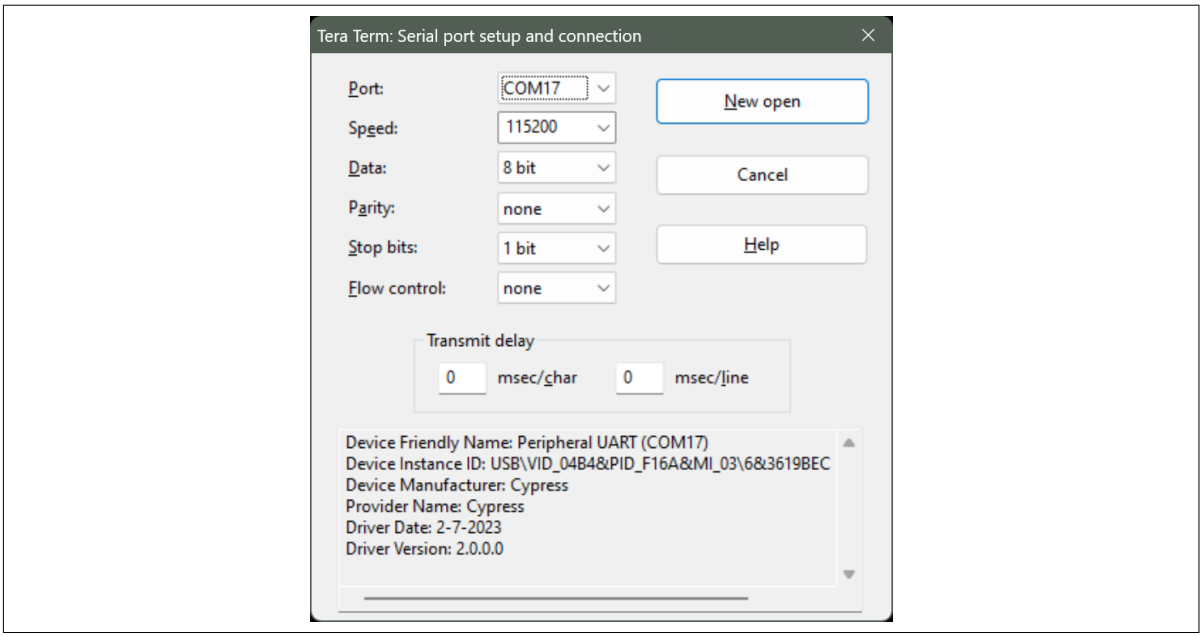

Figure 17 Serial port settings

7. Press the **Reset** button (S1) to activate the pre-programmed connectivity firmware
8. After pressing the reset button, the board will attempt to connect to the default Wi-Fi network, which can be observed via the debug logs
9. Open the dashboard to view the parameters of the hybrid inverter and update configurable parameters

2.4 Dashboard

The dashboard of the Modular Hybrid Inverter solution demonstrates connectivity for the MHI control board over the cloud using the CYW55913 connected MCU.

The connectivity module is application agnostic and can be integrated into host applications that require internet connectivity. The dashboard supports two power topologies: NPC2 and HERIC. Data from these topologies is transmitted by the control board to the connectivity module, which then connects to the cloud for data sharing.

The dashboard enables users to monitor and visualize application parameters and configure specific parameters remotely. It also supports OTA upgrades for both the connectivity module and the host boards.

The dashboard offers the following features:

- Real-time telemetry data visualization
- Device configuration via MQTT
- Firmware Over-the-Air (OTA) updates
- Product and technology insights

2.4.1 Accessing the dashboard

This section explains how to access the dashboard and set up a dashboard application using the provided source code. For details on using the various functions available in the cloud dashboard application, see Navigating the dashboard application.

The evaluation of dashboard functions can be performed using the deployed cloud dashboard application. Alternatively, users can set up their own cloud application and configure the device firmware to connect to their custom dashboard. Opening the deployed dashboard and New dashboard setup and configuration (Optional) describe these two options in detail.

2.4.1.1 Opening the deployed dashboard

The dashboard can be accessed using the following link: www.tinyurl.com/mhidashboard. This link redirects to the Modular Hybrid Inverter dashboard login webpage.

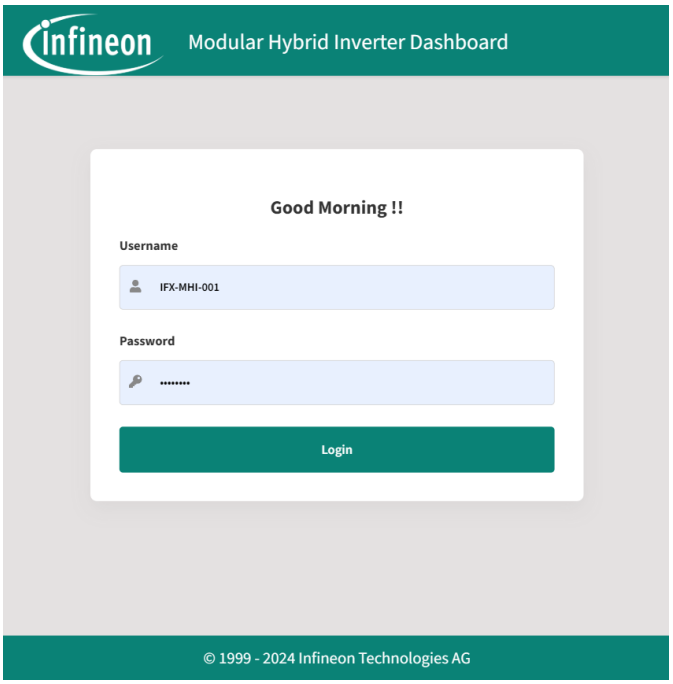

Figure 18 Dashboard login screen

Enter the login credentials provided at the bottom of the box, as shown in Figure 18, and click **Login**. Upon successful login, the MHI dashboard home page will be displayed. You can then proceed directly to explore the Navigating the dashboard application section.



Figure 19 Login details

2.4.1.2 New dashboard setup and configuration (Optional)

The complete source code for the dashboard is available through the Infineon Developer Center. The following sections detail how to set up the dashboard and configure the device firmware.

MQTT communication is secured using certificates registered with the broker, which in this case is AWS IoT Core. The host firmware running on the control board requires these certificates to authenticate and connect to the MQTT endpoint for communication. This section explains the steps for provisioning a new certificate and endpoint information into the existing device.

The control board firmware stores non-volatile information in flash memory. The firmware package, available in the Infineon Developer Center, includes a script to provision these credentials.

2.4.1.2.1 Prerequisites

1. Ensure Python3 is installed and accessible in your system path
2. Use a USB-C cable to connect the **Debug port (X100)** on the control board to the PC
3. Check the assigned serial port number (for example, COM5)
4. Download the dashboard source code package from the Infineon Developer Center using the link provided here
5. Download the appropriate host firmware source code package. Supported host packages currently include:
   - **REF-6KWHERIC**: The source code package is provided here
   - **REF-10KW3LNPC2**: The source code package is provided here
6. Install `node.js` and dependencies:
   - Install `node.js` from the webpage
   - `npm` is included in the `node.js` installation. Verify the installation and its version using the following commands:

```
node -v
npm -v
```

2.4.1.2.2 Setting up a new dashboard

1. Extract the contents of the dashboard source package into a suitable directory
2. Navigate to the directory containing the extracted source code files
3. Install dependency packages. Run the following command in the terminal to install the required dependencies:

```
npm install
```

4. Run the application locally for debugging. Use the following command to start the application in debug mode:

```
npm run dev
```

This command will open the application in your browser at http://localhost:3000

5. Build the application for production. To create a production-ready build of the application, use the following command:

```
npm run build
```

The production build will be saved to the `build` folder

6. Extract the files in the `build` folder and compress them into a `.zip` file
7. Deploy the application to AWS Amplify:
   a. Visit AWS Amplify
   b. Select **Create new app** > **Deploy without git** > **Upload the compressed build.zip** file
8. For additional customization options, see the `README.md` file included in the dashboard source package

2.4.1.2.3 Provisioning the Wi-Fi credentials

1. Navigate to the `scripts` folder in the host firmware source code package
2. Run the following provisioning command:

```
python3 host_provisioning.py <PORT> WIFI <SSID> <PASSWORD>
```

3. Replace the variables as described:
   - **PORT**: The serial port assigned to the control board
   - **SSID**: The SSID of the network the device needs to connect to
   - **PASSWORD**: The password required for the connection

2.4.1.2.4 Provisioning the device name

1. Navigate to the `scripts` folder in the host firmware source code package
2. Run the following provisioning command:

```
python3 host_provisioning.py <PORT> device_id <DEVICE_ID>
```

3. Replace the variables as described:
   - **PORT**: The serial port assigned to the control board
   - **DEVICE_ID**: The name used to identify the device on the dashboard. This must match the string shown on the sticker at the bottom of the kit box

2.4.1.2.5 Provisioning the MQTT certificates

1. Navigate to the `scripts` folder in the host firmware source code package
2. Run the following provisioning command:

```
python3 host_provisioning.py <PORT> certificates <rootCA.crt> <private.key>
<client_certificate.crt>
```

3. Replace the variables as described:
   - **PORT**: The serial port assigned to the control board
   - **`rootCA.crt`**: Name of the file containing the root certificate authority certificates

- `private.key`: Name of the file containing the private key for the device certificates
- `client_certificate.crt`: Name of the file containing the client certificate

2.4.1.2.6 Provisioning the MQTT endpoint

1. Navigate to the `scripts` folder in the host firmware source code package
2. Run the following provisioning command:

```
python3 host_provisioning.py <PORT> mqtt_endpoint <URL>
```

3. Replace the variables as described:
   - **PORT**: The serial port assigned to the control board
   - **URL**: The URL of the MQTT endpoint to be connected

2.4.2 Navigating the dashboard application

Each device dashboard includes telemetry, control, and configuration tools. The user interface (UI) dynamically adjusts based on the power stage (NPC2 or HERIC) of the device.

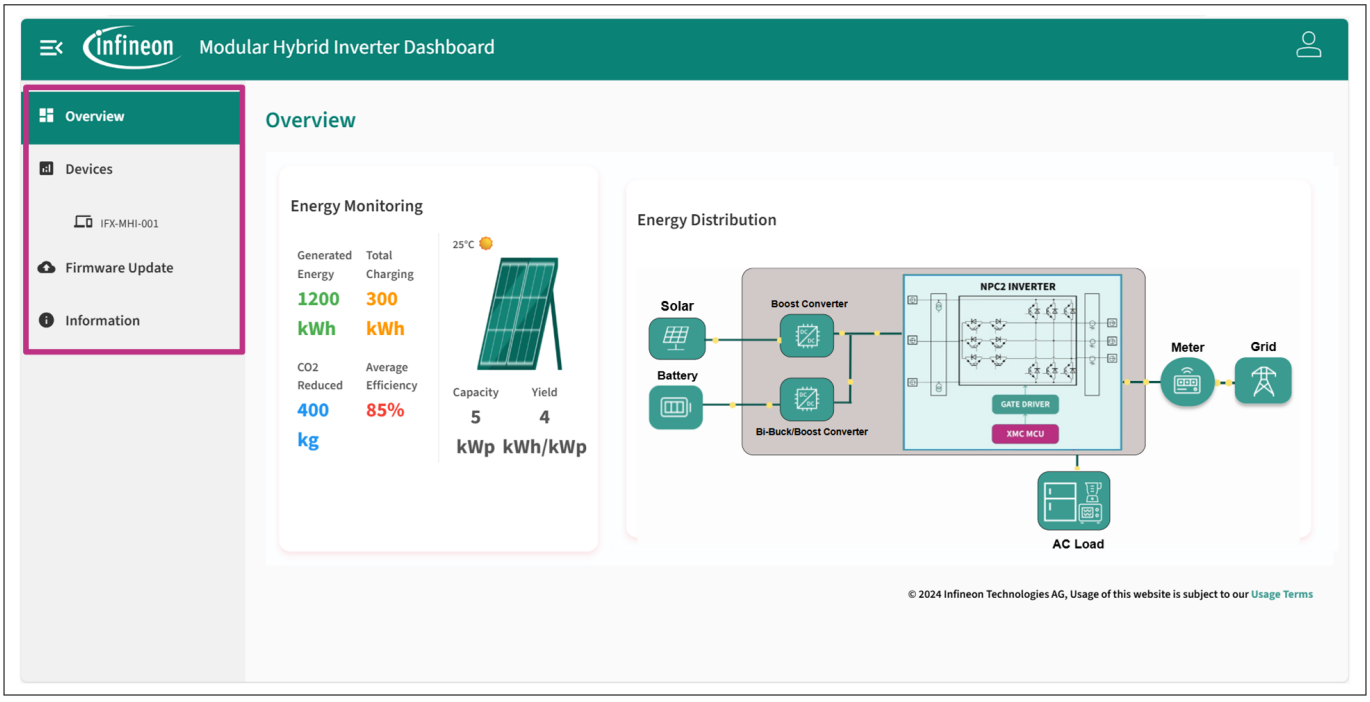

Figure 20 Navigation sidebar of the Modular Hybrid Inverter dashboard

The left navigation panel tabs, as shown in Figure 20, contain the following elements:

- **Overview**: General energy metrics and system layout
- **Devices**: Access and control for each connected inverter device
- **Firmware update**: Management of OTA firmware updates for device components
- **Information**: Details about photovoltaic (PV) and inverter technology

2.4.2.1 Overview

The Overview tab provides a high-level summary of the system's performance and structure, including the following elements:

- **Energy monitoring**:
  - Generated energy
  - Total charging
  - CO_2 reduced
  - Efficiency
- **Solar array info**:
  - Capacity
  - Yield
- **Energy distribution**: The energy distribution block diagram as shown in Figure 20 visually represents the power flow across system components, such as the solar array, battery, converters, inverter, and AC load/ grid. This diagram is animated, offering a dynamic view of real-time energy flow between components. The animation and directional indicators show how and where energy is routed within the system, providing clear insights into current operational behavior

2.4.2.2 Devices

The Devices tab in the Modular Hybrid Inverter dashboard provides information on telemetry data sent by the modular hybrid inverter to the dashboard over the cloud. Certain parameters can also be remotely modified. Each connected inverter appears under the Dashboard section as a selectable item (for example, IFX-MHI-XXX). Based on the selected device, either the NPC2 or HERIC power stage user interface (UI) is dynamically loaded.

The Devices page includes the following elements:

- **Power stage details**:
  - Displayed in the top-left (for example, “Power Stage: NPC2”)
  - Board ID displayed on the right (for example, IFX-MHI-XXX)
- **Control panel options**:
  - Start PV Converter
  - Stop PV Converter
  - Reset PV Converter
  - Status indicator shows live status
- **Configuration**:
  - Parameters include settings like Duty Cycle and Fan Duty
  - Hover over the information icon for parameter descriptions
  - Click Apply to send configurations via MQTT
- **Monitoring or telemetry section**:
  - Graphs for voltage and current
  - Additional indicators: Temperature, NPC2/HERIC state

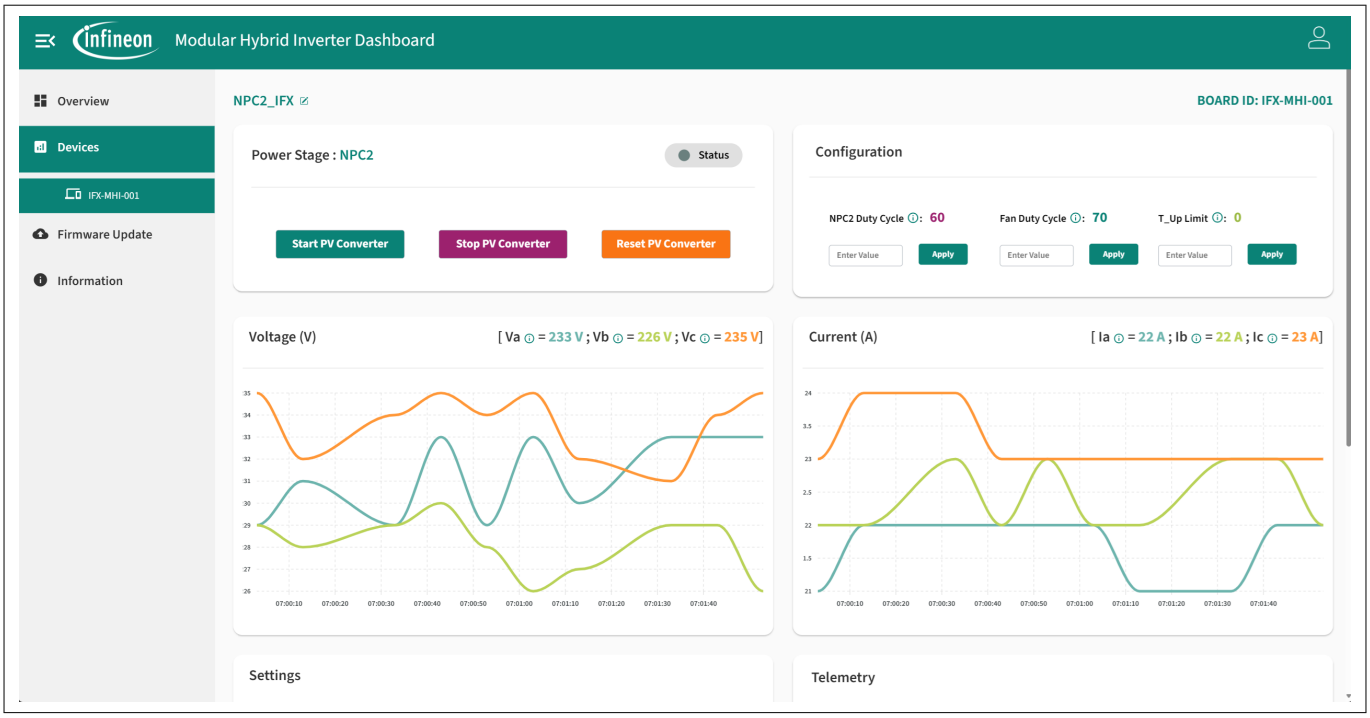

Figure 21 Devices tab in the Modular Hybrid Inverter dashboard

Monitoring telemetry data

The dashboard communicates with devices using the MQTT protocol. Telemetry data is transmitted from the device to the dashboard, providing real-time system updates. Configuration commands are sent from the dashboard to the device, allowing users to apply new settings. Each power stage, NPC2 or HERIC, has a unique set of telemetry and configuration parameters, including voltage, current, temperature, and operational limits. These parameters are specifically defined and structured to suit the requirements of the respective power stage.

These telemetry and configuration parameters ensure safe and efficient system operation. They also enable remote monitoring and control of system behavior through the dashboard interface.

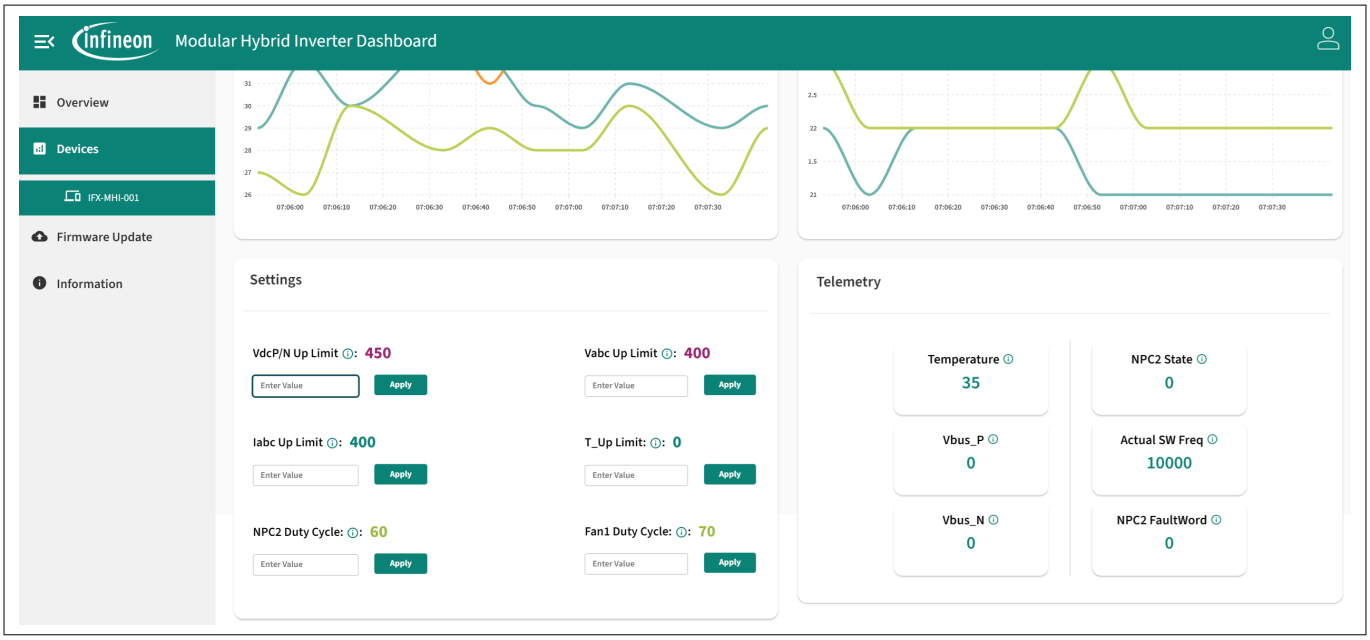

Figure 22 Telemetry data presented in the Devices page

Updating configurations

The Modular Hybrid Inverter solution dashboard allows users to configure specific parameters remotely over the cloud.

- In the **Dashboard** tab, parameters that can be updated are displayed with a text box below them, as shown in Figure 22
- Enter the desired parameter value in the text box and click **Apply**
- The dashboard will exchange data with the connectivity device over the cloud. Once feedback is received, the parameter value will be updated, indicating that the new values have been successfully applied

2.4.2.3 Firmware Update

The dashboard provides support for performing Over-the-Air (OTA) updates on the application code running on deployed hybrid inverters connected to the cloud via the connectivity board.

The Firmware Update section of the Modular Hybrid Inverter dashboard offers an interface to perform OTA firmware upgrades for the two primary components of the hybrid inverter solution: the MHI control card and the MHI connectivity board.

To perform an OTA update, do the following:

1. Select the device from the drop-down list
2. View the currently installed firmware versions for the connectivity and control boards
3. Choose the appropriate board to update
4. Click **Update**
5. After clicking Update, a pop-up window will open containing a progress bar that displays the live status of the firmware update process
6. Before the update starts, the system performs a device status check to ensure the device is online and ready for the update
7. Once the device is validated, the firmware transfer begins, and the completion percentage is updated in real-time
8. You will be notified of the outcome upon the success or failure of the update

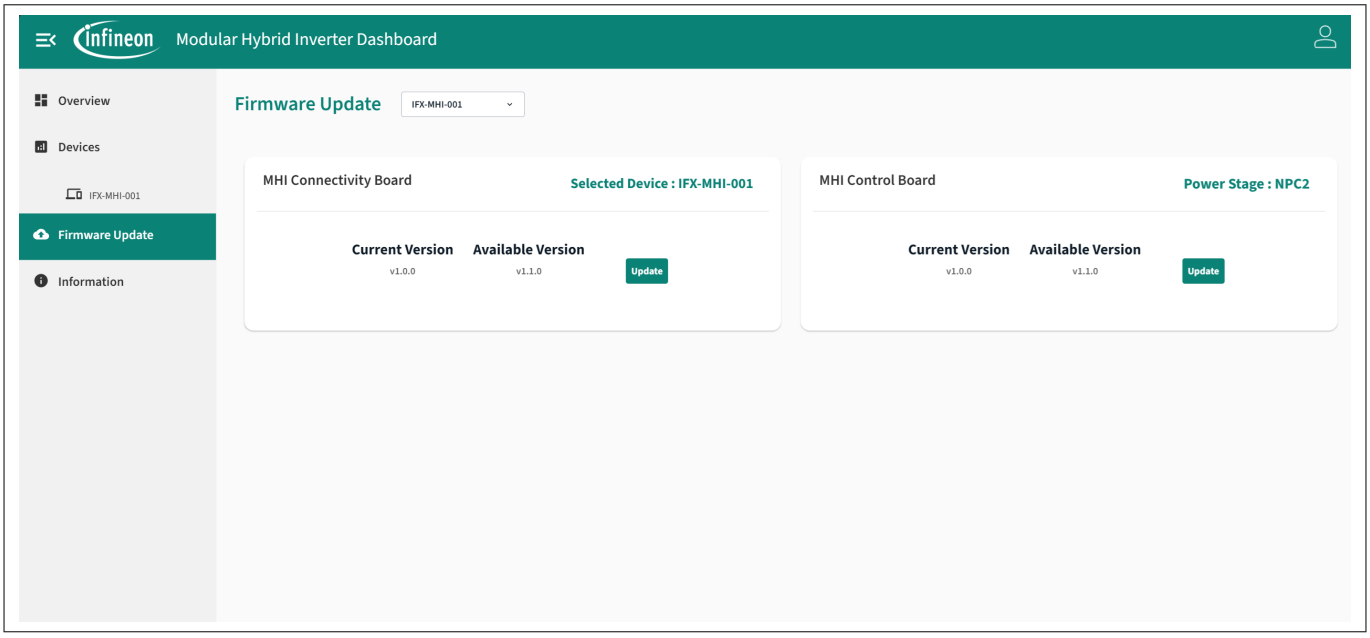

Figure 23 Firmware Update tab in the Modular Hybrid Inverter dashboard

2.4.2.4 Information

The Information tab in the Modular Hybrid Inverter dashboard provides a static information page about Infineon's solar and inverter technology offerings.

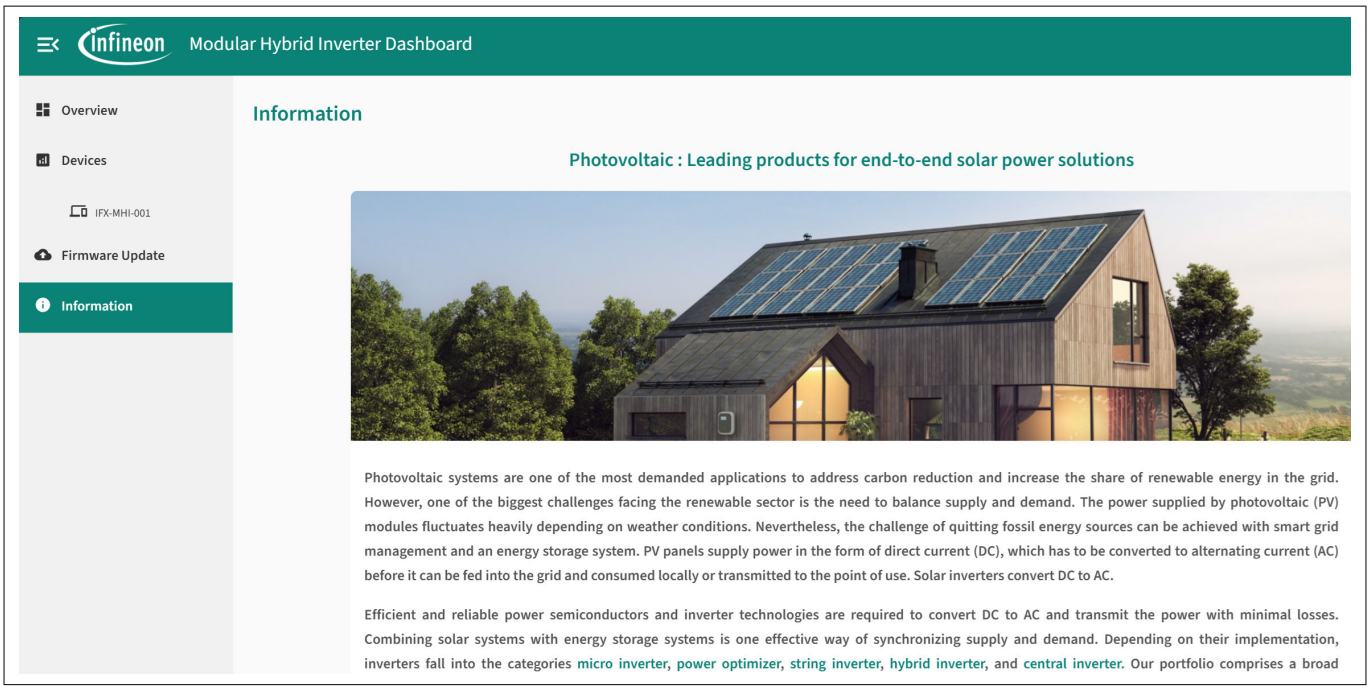

Figure 24 Information tab in the Modular Hybrid Inverter dashboard

2.5 Customizing the firmware

The complete source code for the firmware project for the connectivity application is available through the Infineon Developer Center. Follow the steps below to set up a dashboard and customize it as required.

1. Download the source code package from the Infineon Developer Center using the following links:
   - Connectivity board firmware for the CYW55913 connected MCU
   - Control board firmware for the host application (varies based on the power stage selected):
     - Control board firmware for the HERIC power stage
     - Control board firmware for the NPC2 power stage
2. Extract the contents of the zip package
3. For steps to import the firmware into ModusToolbox™ for modifications, see Creating a project and programming/debugging using ModusToolbox™

2.5.1 Creating a project and programming/debugging using ModusToolbox™

This section introduces project creation, programming, and debugging using ModusToolbox™ software. For detailed instructions, refer to **Help** > **ModusToolbox™** > **General Documentation** > **ModusToolbox™ user guide**.

1. **Connect the baseboard to the PC**:
   - Use a USB cable to connect the baseboard of the connectivity kit to the PC through the KitProg3 USB connector (J5)
   - When connecting to the PC for the first time, the kit enumerates as a USB composite device

- KitProg3 operates in CMSIS-DAP Bulk mode, and the status LED (green) remains ON in this mode
- If the correct LED status is not visible, see the KitProg3 user guide for details on LED status and troubleshooting instructions

2. Import the required code into Eclipse IDE for ModusToolbox™:

a. In the Eclipse IDE, create a new workspace

b. Navigate to the **Quick Panel** tab and click **Import Existing Application In-Place**

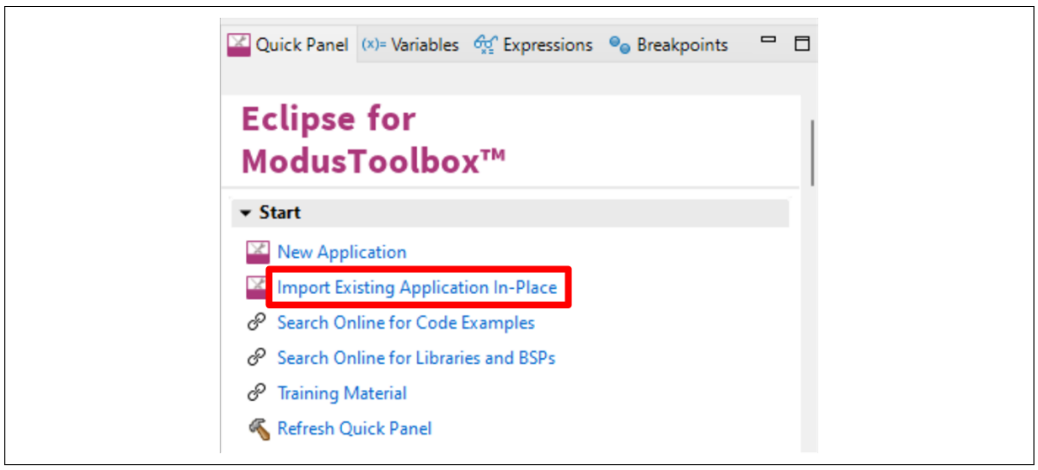

Figure 25 Import Existing Application in Quick Panel

c. Use the **Browse** option to locate the project

d. Click **Finish** to complete the import process

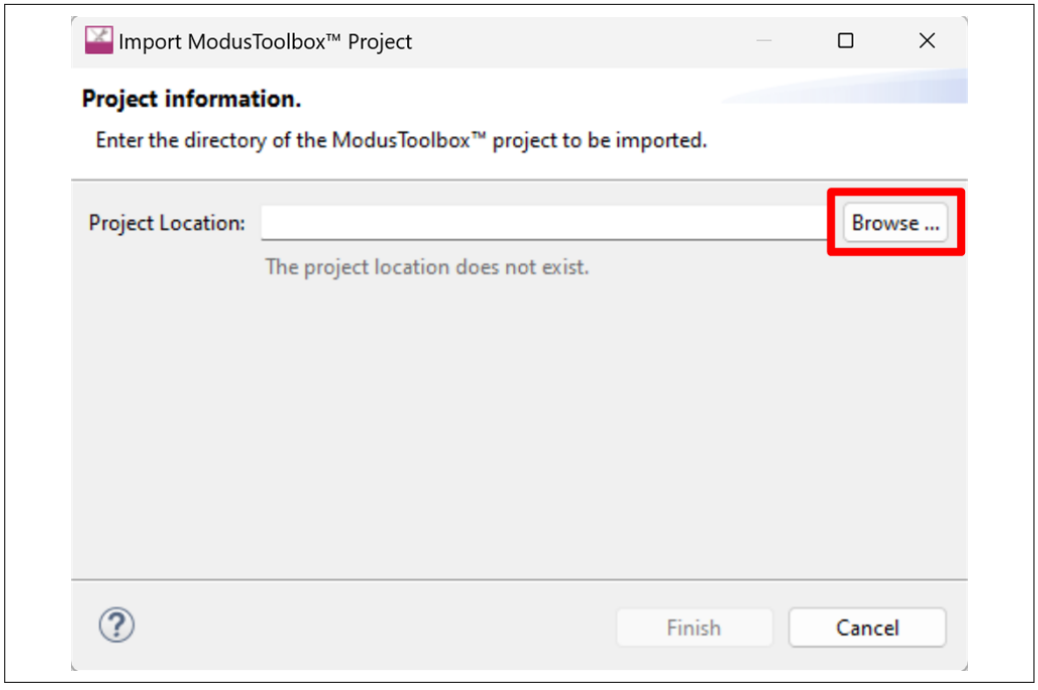

Figure 26 Import the ModusToolbox™ project

3. Build and program the connectivity board for the modular hybrid inverter application:

a. In the **Project Explorer** tab, select the **<App_Name>** project

b. In the **Quick Panel** tab, scroll to the **Launches** section

c. Click **<App_Name> Program** to build and program the board

2 Kit operation

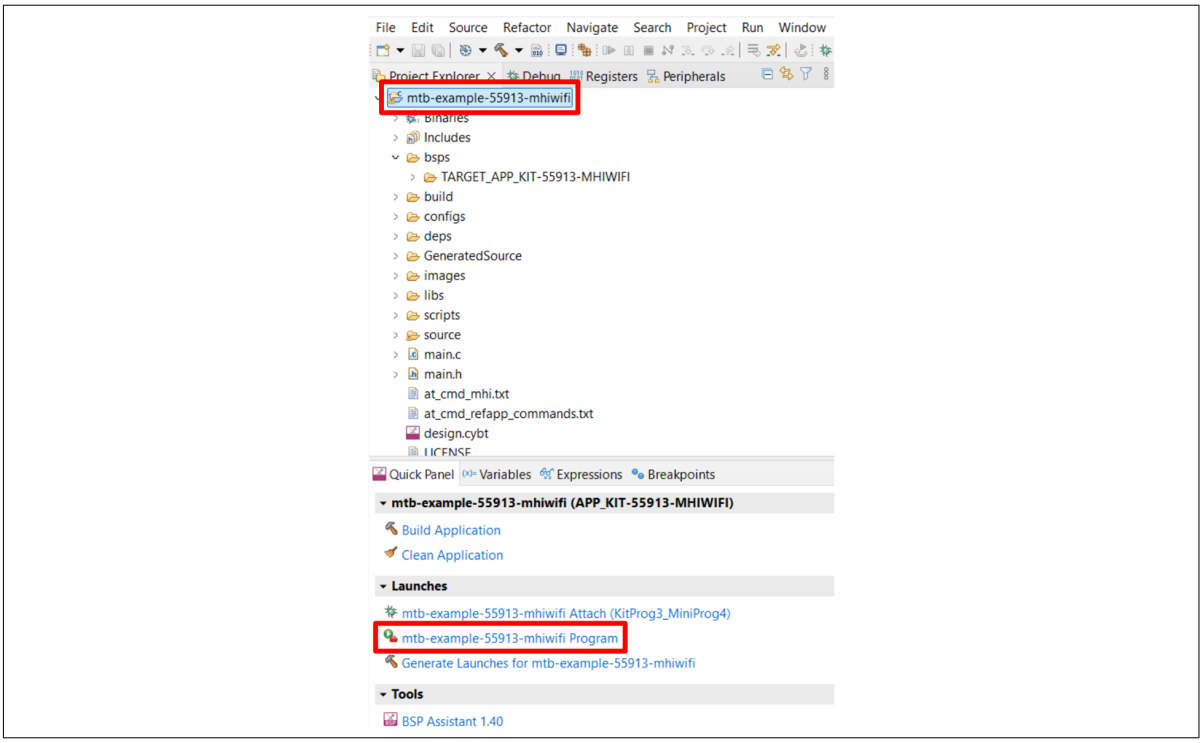

Figure 27 Program the application

3 Hardware

This section provides an overview of the KIT-55913-MHIWIFI kit hardware and its primary components, including power supplies, onboard debugger, I/O headers, memories, connectors, and peripherals.

The kit consists of two boards:

1. **Baseboard (KIT-55913-PROTO)**: Equipped with the CYW55913 device and all peripherals required for operation
2. **Shield board (SHLD-55913-MHIWIFI)**: Includes connector headers for SPI communication and power distribution between the power board and control board

3.1 Design files

Schematics and design files for the boards included in this kit are available on the kit webpage.

3.2 Baseboard (KIT-55913-PROTO)

3.2.1 CYW55913 device

CYW55913 is the primary component of the kit. It is an ultra-low-power, single-chip, connected MCU that supports 1x1 Wi-Fi 6/6E, Bluetooth® LE 5.4, Matter, and IP networking. With an integrated PMU, it is designed for Internet of Things (IoT) applications, offering flexibility to operate as a standalone device or to offload processing tasks from a host processor.

At its core, an integrated 192 MHz Arm® Cortex®-CM33 processor powers Wi-Fi and networking stacks, Bluetooth® LE 5.4 functionality, and a wide array of peripheral support. CYW55913 operates across a broad temperature range of -40°C to +85°C and is packaged in a compact 0.35 mm pitch WLBGA format.

CYW55913 is part of a larger family of devices that includes CYW55912, CYW55911, CYW55903, CYW55902, and CYW55901. All devices in this family share similar features but are tailored for specific use cases or requirements.

Additionally, CYW55913 is integrated into the Azurewave (AW-CU640) connectivity module, which features an on-module antenna. This integration simplifies design implementation and accelerates development for IoT applications.

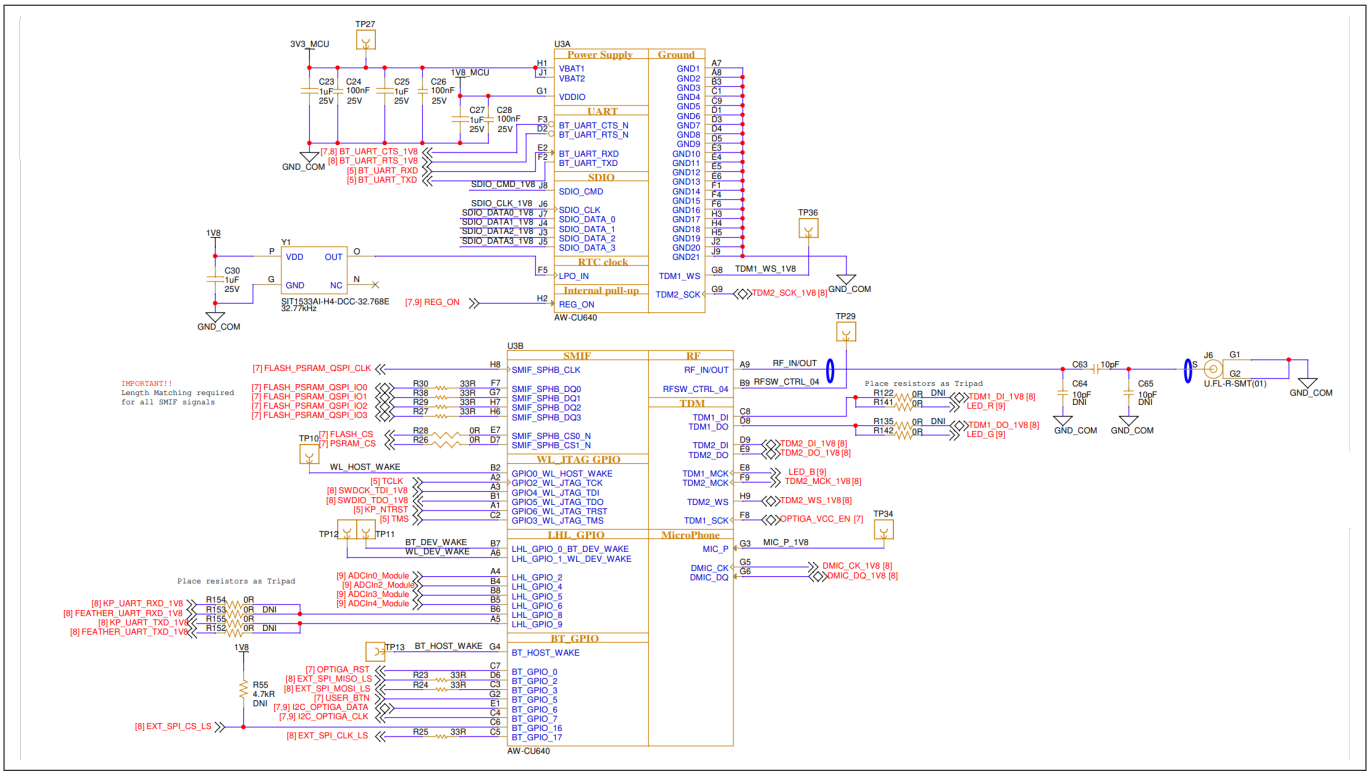

Figure 28 AW-CU640 module with the CYW55913 connected MCU

3.2.2 Board power distribution system

The kit includes multiple circuits to implement a complete solution and utilizes regulators to separate the circuits into distinct power domains. The power for the connectivity module is divided into two main power rails: VBAT and VDDIO. A buck regulator is used to maintain appropriate voltage and current levels for the various circuits, while also reducing leakage current in the system.

This solution incorporates the IR3823AMTRPBF, a 3 A single-output synchronous buck regulator from Infineon. The IR3823AMTRPBF is an easy-to-use, fully integrated synchronous buck regulator with a compensation-free, fast constant-on-time (COT) control scheme. This design significantly simplifies development effort and reduces the bill of materials (BOM).

Additionally, the board includes an LDO, the TLS205B0EJV, which is a micro-power, low-noise, low-dropout voltage regulator. It supplies an output current of 500 mA with a dropout voltage of 300 mV, making it ideal for powering sensitive circuits.

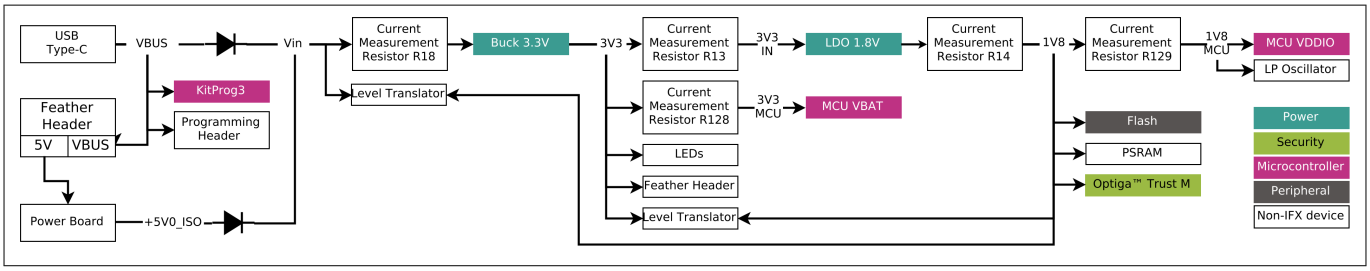

Figure 29 Power distribution block diagram

3 Hardware

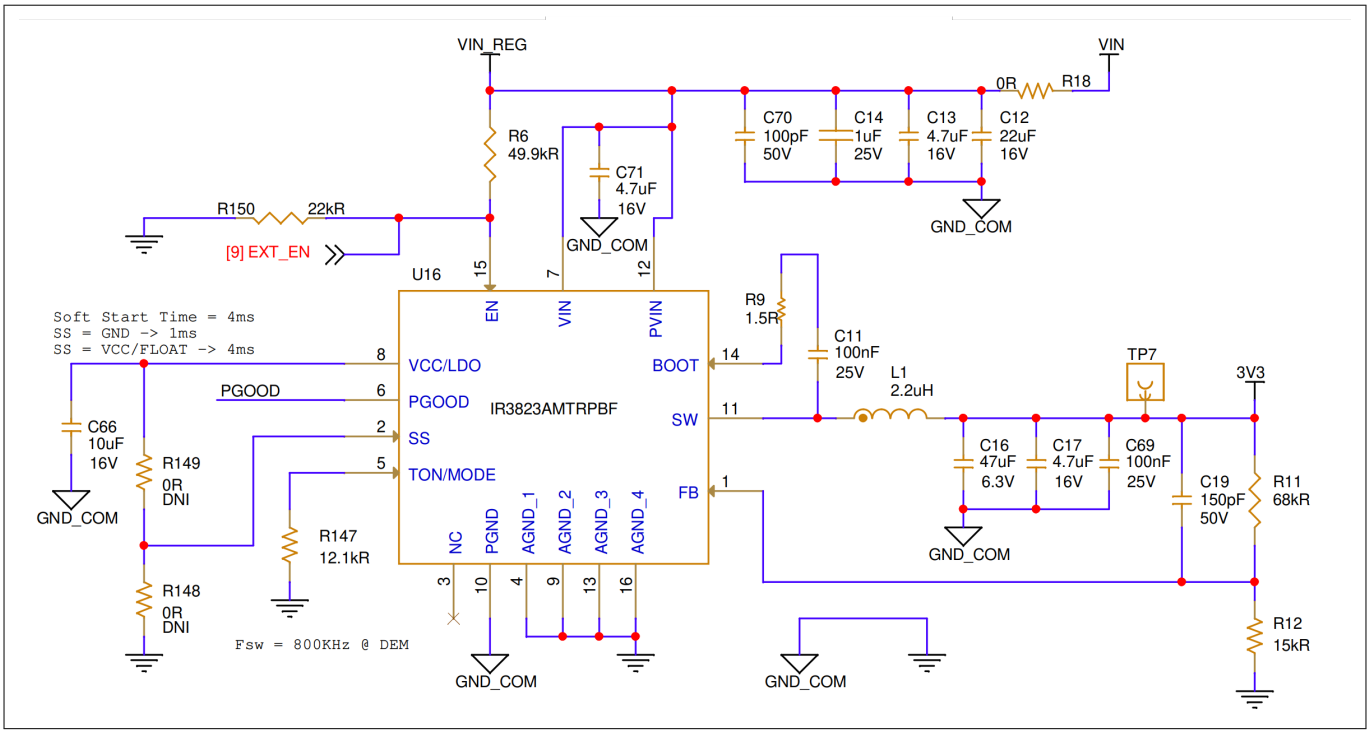

Figure 30 Buck regulator

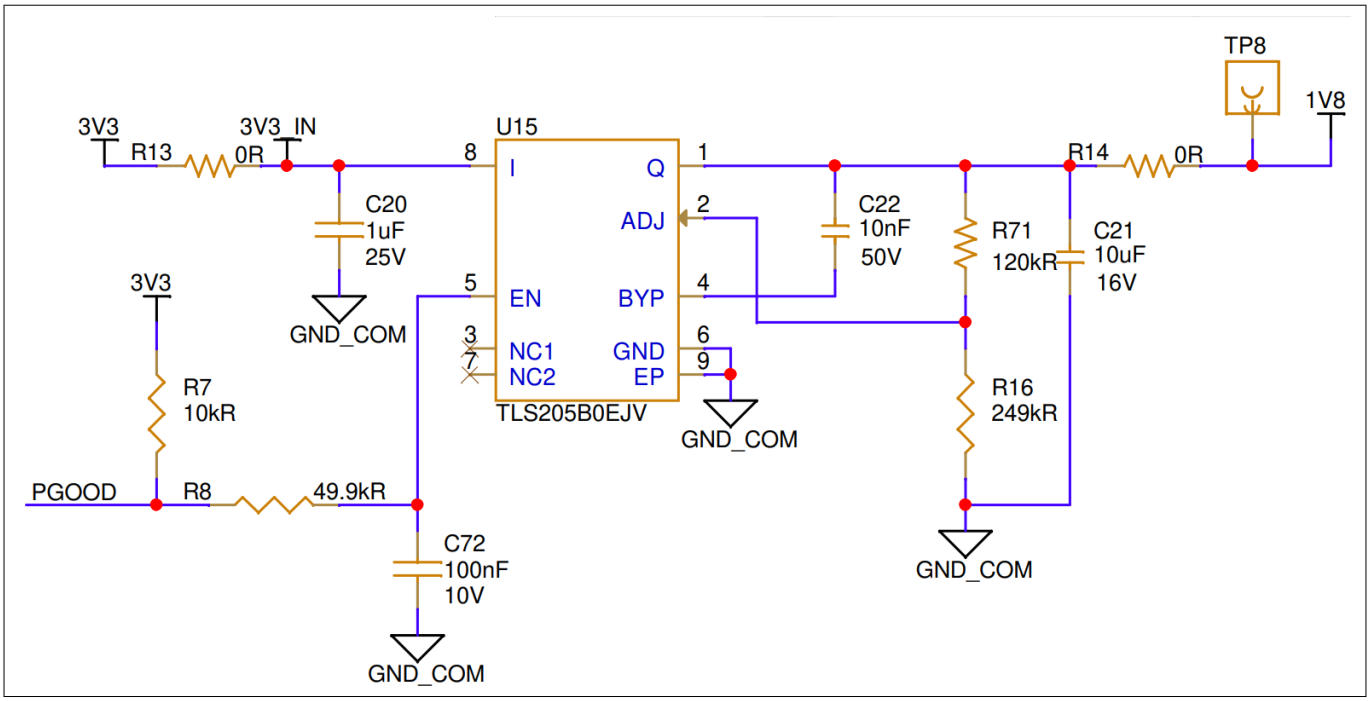

Figure 31 Low-dropout regulator (LDO)

The logical signal pins of the CYW55913 device must be translated to the appropriate voltage level before interfacing with KitProg3 and the external headers.

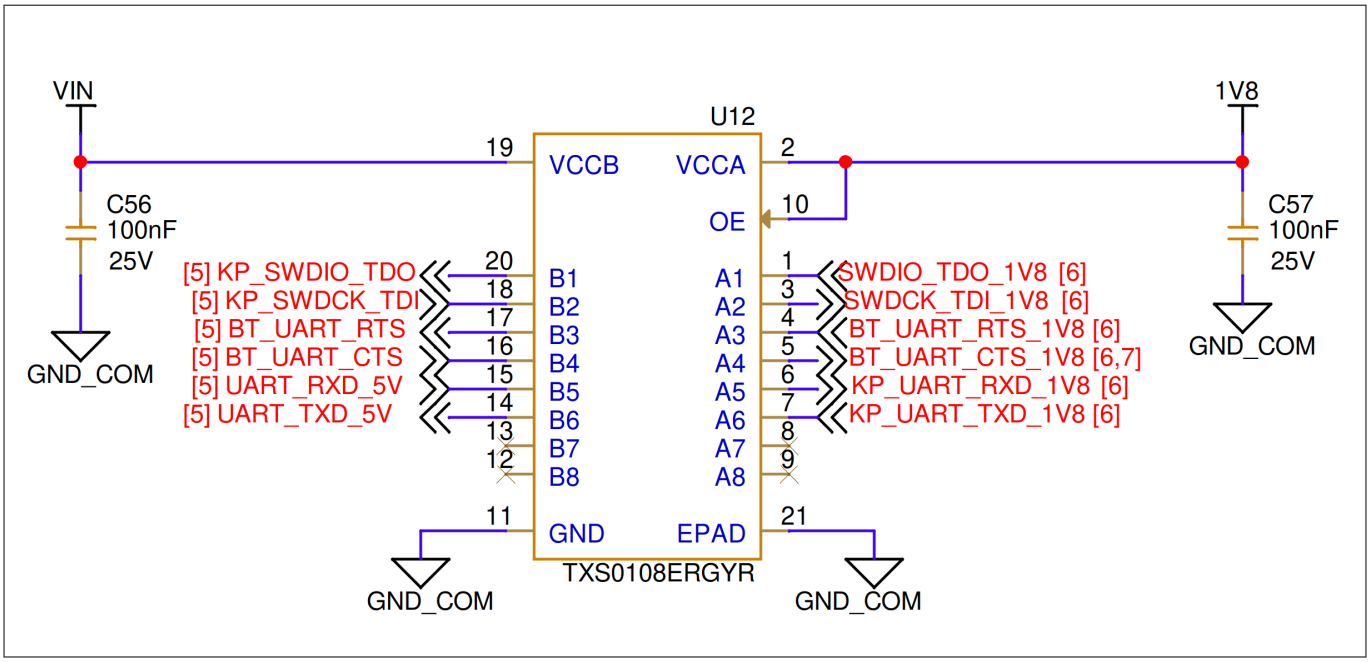

Figure 32 Level translation between the CYW55913 module and the KitProg3 onboard debugger

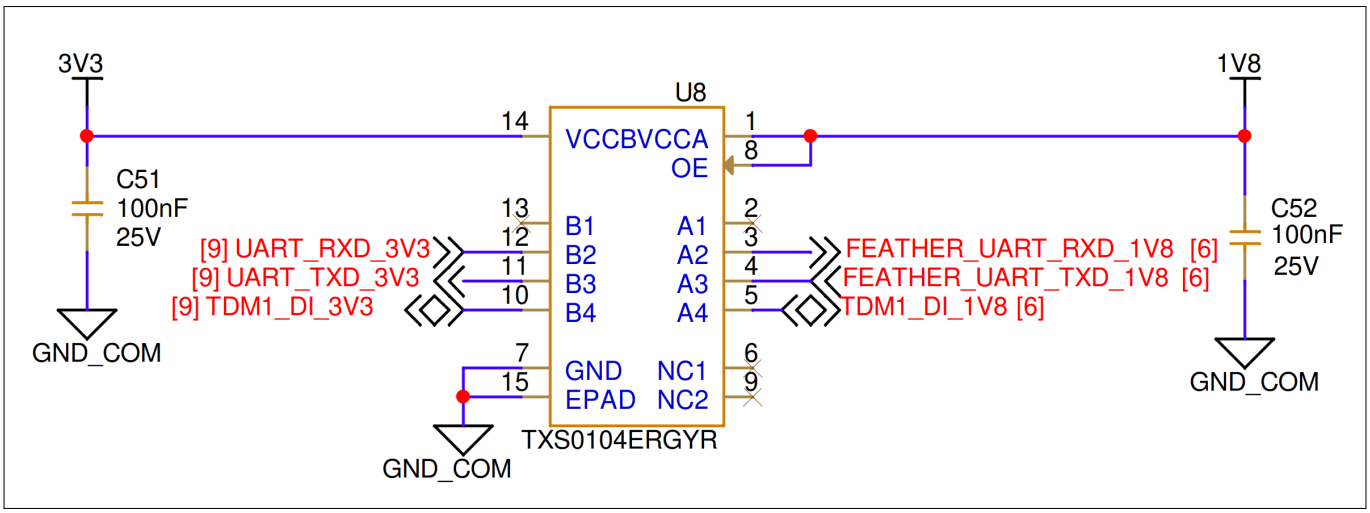

Figure 33 Level translation between the CYW55913 module and the Feather header

The SPI signals can operate in two modes:

- 5 V logic level for interfacing with a control board
- 3.3 V logic level for interfacing with 3.3 V SPI peripherals, such as Adafruit wing boards

By default, the board is configured for 5 V logic, which is suitable for connecting to control boards. To use the board with a Feather wing board or other 3.3 V logic-level peripherals, specific modifications are required:

1. Remove resistor R35
2. Populate resistor R36 with a 0 Ω resistor

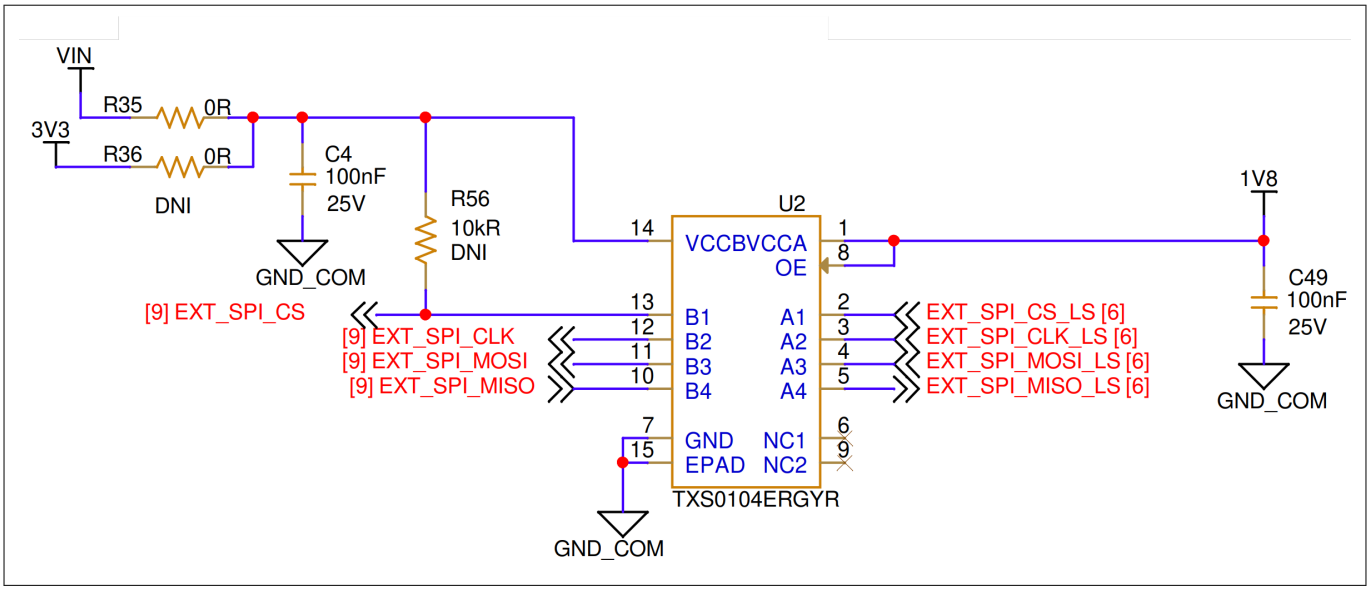

Figure 34 Level translation between the CYW55913 module and SPI signal interface to the control board

3.2.2.1 Current measurement

To measure the power consumption from the MCU_VBAT supply rail, use the current measurement resistor R128. For measuring power consumption from the MCU_VDDIO supply rail, use the current measurement resistor R129.

For additional power measurement-related information, see Figure 29.

***Note**: To measure power across a current measurement resistor, replace the resistor with a current measurement circuit connected in series.*

3.2.3 I/O assignments

All I/O signals from the connectivity module are either used for on-board functions or made accessible on the baseboard through headers or test points. Figure 35 and Figure 36 provide detailed information about these I/O assignments.

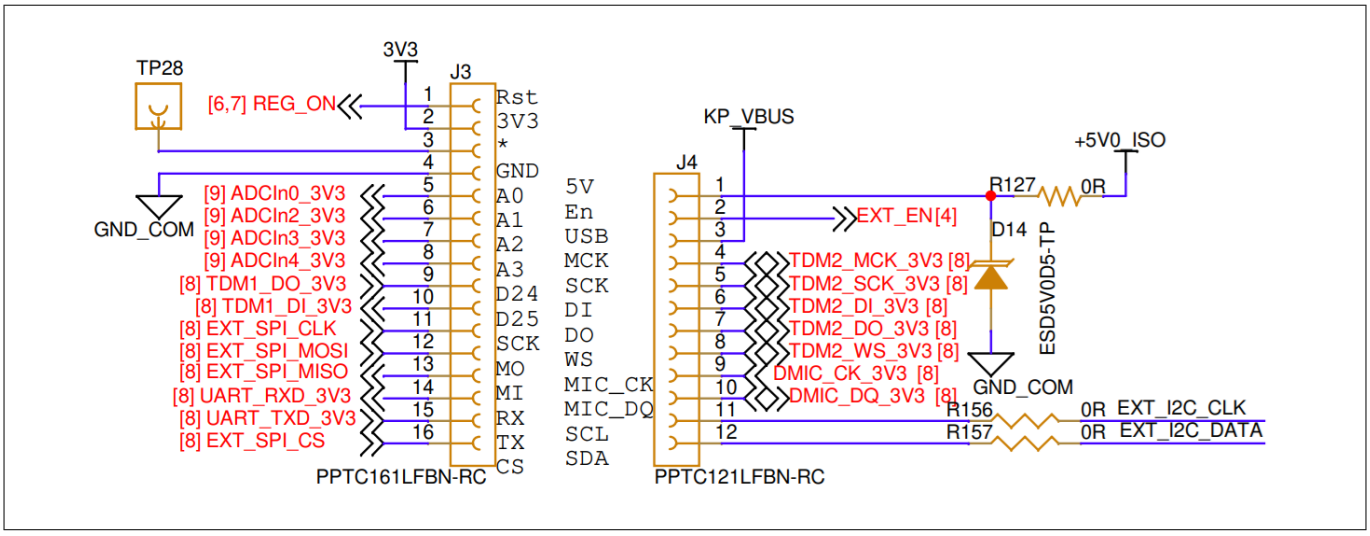

Figure 35 Adafruit Feather header

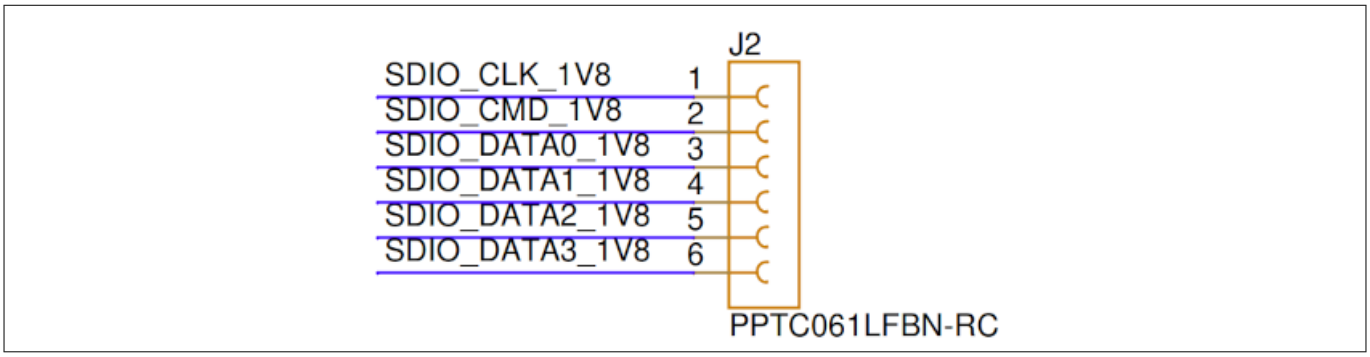

Figure 36 SDIO header

3.2.4 UART selection

The Peripheral UART, connected via the KitProg3 on-board debugger to the USB port, and the UART signals on the Adafruit headers share the same serial communication blocks (SCB). Only one of these can be accessed at a time. By default, the configuration uses the Peripheral UART port through the USB connector.

To switch to using the Adafruit header UART signals, adjust the resistor positions as follows:

- Move R154 to the R153 position
- Move R155 to the R152 position

For additional details, Figure 37.

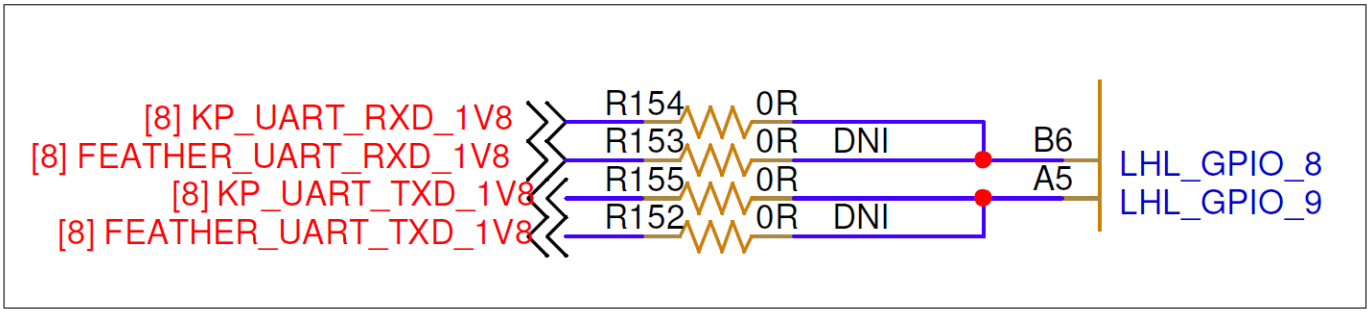

Figure 37 UART selection between Peripheral UART port and Adafruit header pins

3.2.5 Adafruit-compatible headers

The baseboard includes generic Adafruit-compatible headers. The pin definitions for these headers are provided in Figure 38.

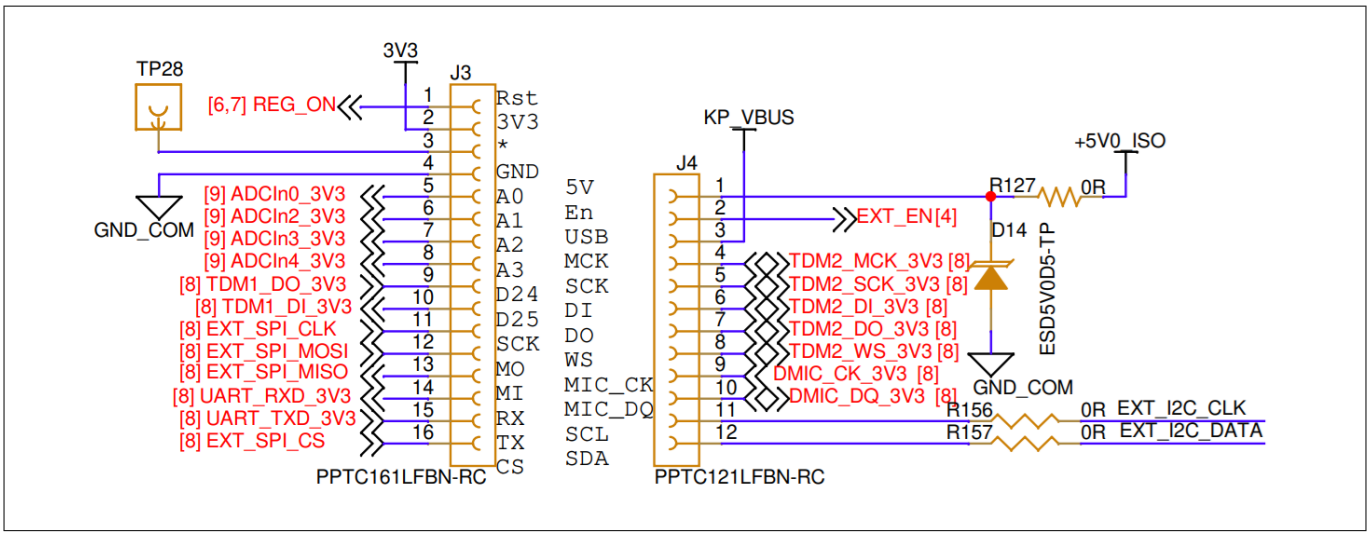

Figure 38 Schematic of the baseboard Feather header

3.2.6 Reset and Recover button

KIT-55913-PROTO includes a reset button and a recover button.

- **Reset button (S1)**: The reset button is connected to the *REG_ON* pin of the CYW55913 device. When the button is pressed, it connects this pin to ground, disables the Bluetooth® subsystem power supply, and resets the system
- **Recover button (S2)**: The recover button is connected to the *BT_UART_CTS* signal pin on the CYW55913 device. When pressed during boot, this button grounds the pin and places the device into recovery mode

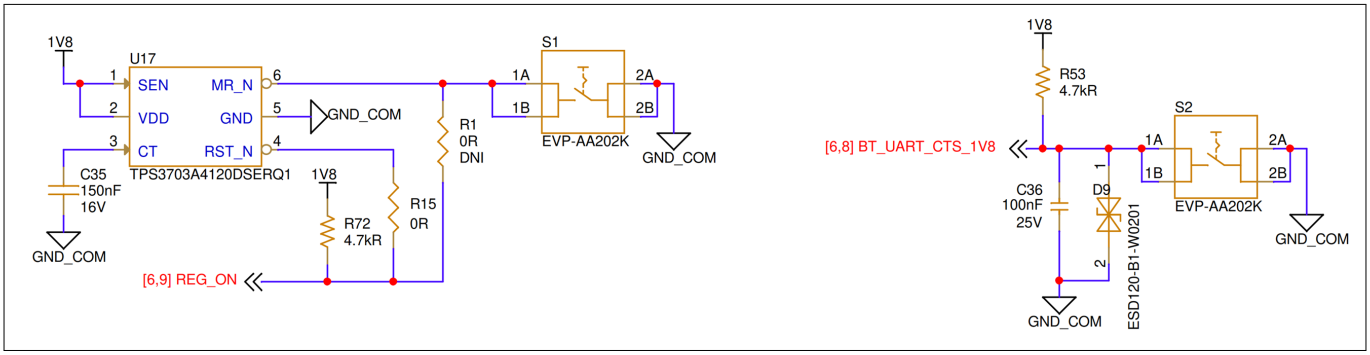

Figure 39 Reset and Recover button

3.2.7 User LEDs

The baseboard includes a user-controlled RGB indication LED (D2), which is managed using GPIO pins on the CYW55913 device. The LED has the following three signals:

- **LED_R**: Controls the red color and is connected to the *TDM1_DI* GPIO pin on the CYW55913 device
- **LED_G**: Controls the green color and is connected to the *TDM1_DO* GPIO pin
- **LED_B**: Controls the blue color and is connected to the *TDM1_MCK* GPIO pin

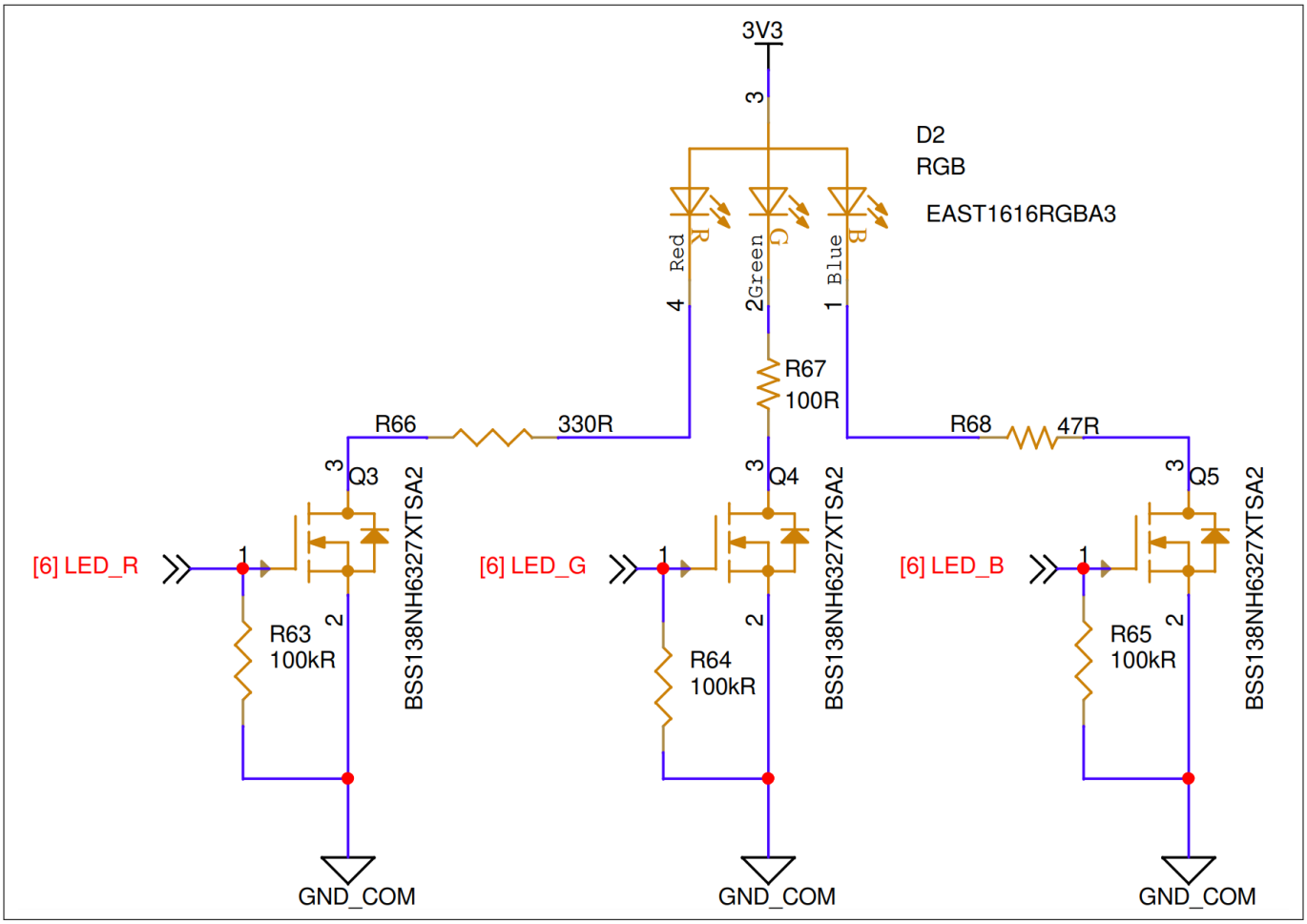

Figure 40 User LED

3.2.8 User button

The kit includes a user-controlled button (S3) for providing user-specified inputs. This button is connected to the *BT_GPIO_5* pin of the CYW55913 device and functions as an active-low input.

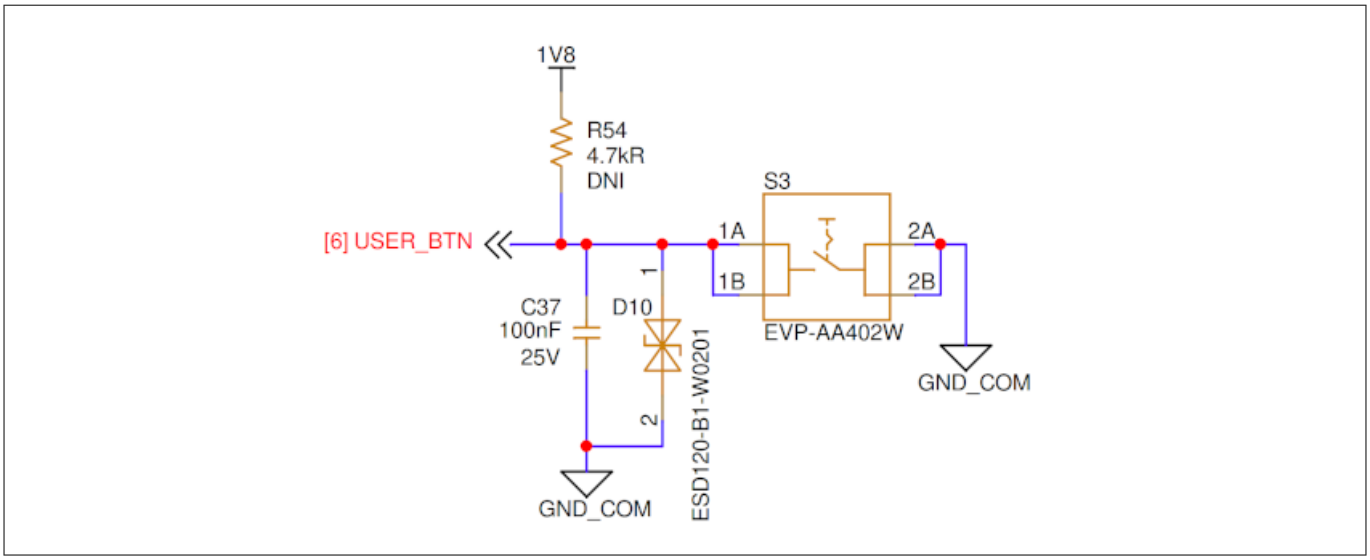

Figure 41 User button

3.2.9 OPTIGA™ Trust M

OPTIGA™ Trust M is a security solution built on CC EAL 6+ (high)-certified, tamper-resistant hardware. This secure element can operate with any MCU, MPU, or application processor to autonomously perform various security-related tasks, thereby enhancing the security of existing IoT designs.

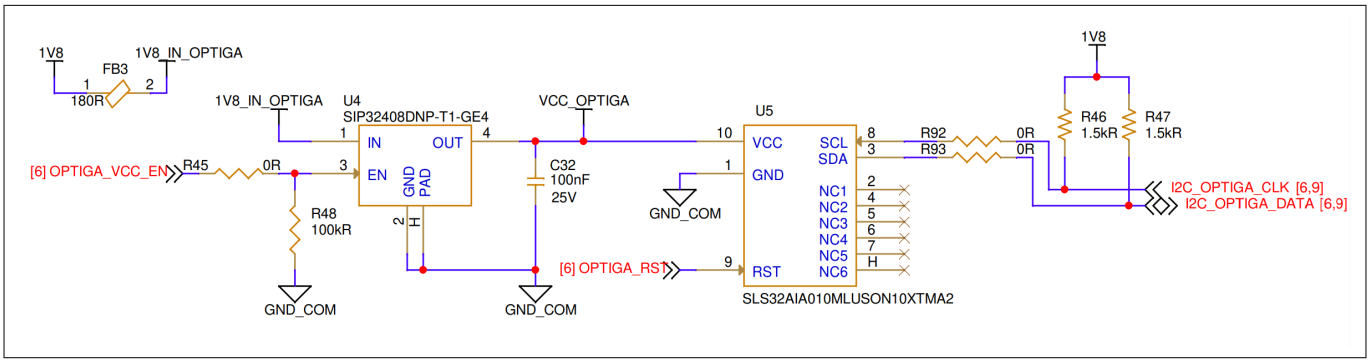

Figure 42 OPTIGA™ Trust M

3.2.10 Flash

Infineon's S25FS128SAGNFI103 is a high-performance Quad SPI NOR Flash memory device with a capacity of 128 Mb (16 MB). It supports high-speed data transfer rates via a Quad SPI interface, offering both SDR and DDR modes with clock frequencies of up to 120 MHz.

Designed for applications requiring high endurance and low power consumption, this device is well-suited for embedded systems, IoT devices, and automotive applications. It delivers reliable performance, incorporates advanced security features, and operates within an industrial temperature range, making it a robust and versatile solution for a wide range of use cases.

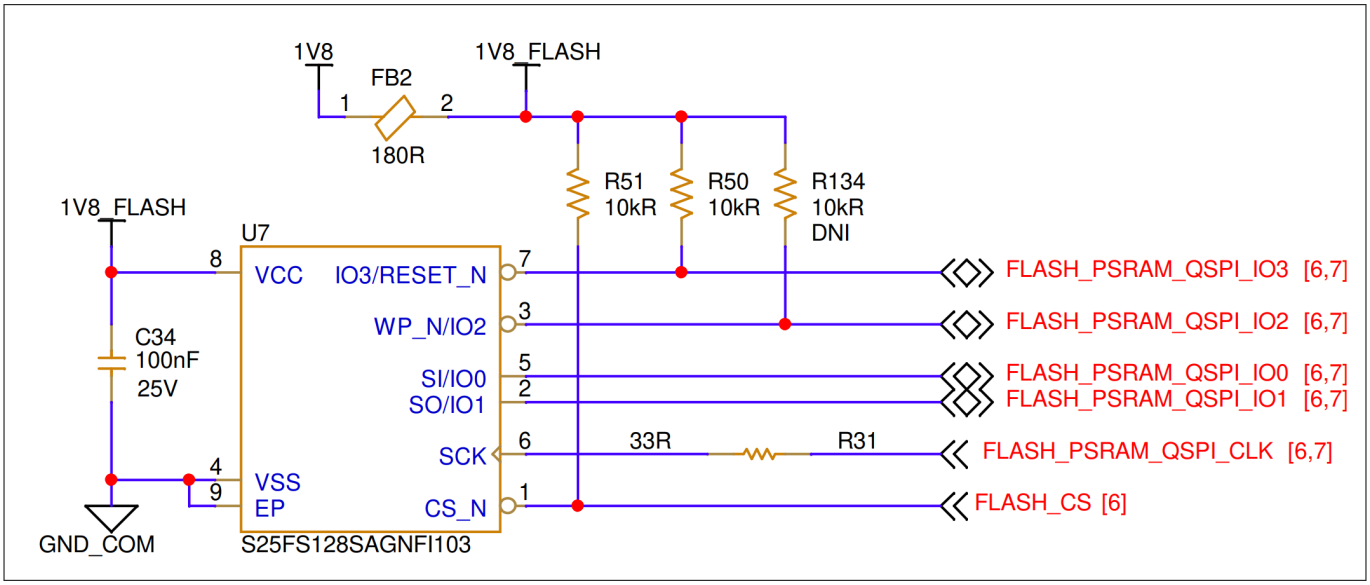

Figure 43 Flash schematic

3.2.11 PSOC™ 5 LP-based KitProg3 programmer and debugger

The onboard PSOC™ 5LP device (CY8C5868LTI-LP039) is a programmable embedded system-on-chip responsible for two-channel USB-to-serial conversion on the baseboard. It implements the onboard programmer (KitProg3). The USB-to-serial pins of the PSOC™ 5LP device are hard-wired to the HCI UART pins of the CYW55913 device. Additionally, it allows access to another peripheral UART port of the CYW55913 device via

USB. The mode switch (S4) is provided to toggle between single and dual UART modes of KitProg3 operation. The status LED (D12) visually indicates the current mode of KitProg3.

This kit supports a special operating mode that enables two UART connections instead of a single UART with a bridge (USB-to-I^{2}C or USB-to-SPI). To enter dual-UART mode, press and hold the mode switch (S4) for at least 2 seconds. In dual-UART mode, the KitProg3 status LED (D12) blinks for 1 second at 2 Hz, then stays on for another second to confirm the mode switch. To exit dual-UART mode, press and hold the mode switch for at least 2 seconds again.

In single-UART mode, only the HCI UART is connected to USB. To enable debug logs, the peripheral UART must be activated, and the KitProg3 mode must be changed to dual-UART mode.

KitProg3 supports other serial bridges, including USB-to-I^{2}C and USB-to-SPI, as well as USB-to-JTAG for debugging purposes. All serial interfaces are connected through level translators, as the PSOC™ 5LP device supports 5 V logic signals and the CYW55913 device supports 1.8 V logic signals.

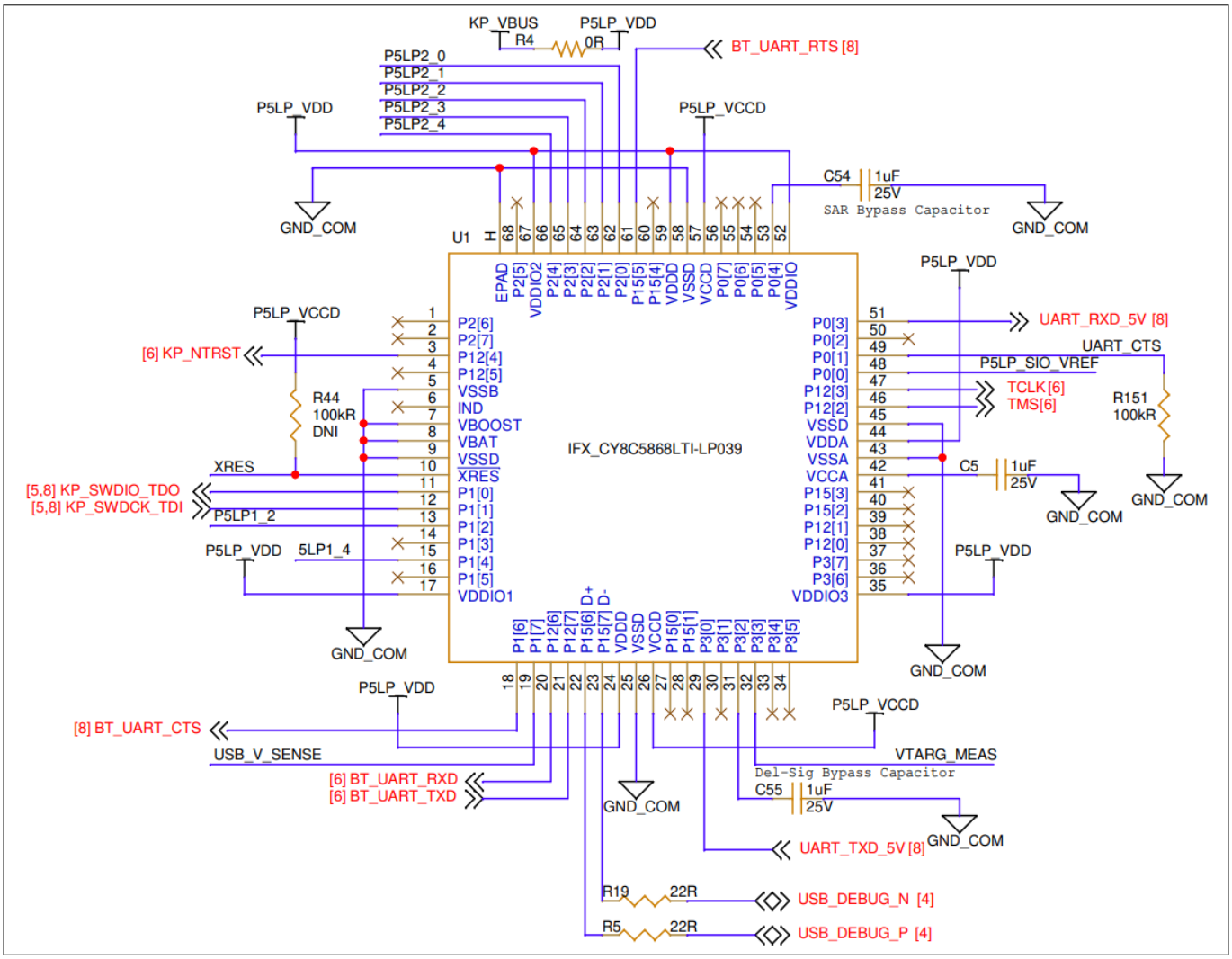

Figure 44 KitProg3 onboard debugger

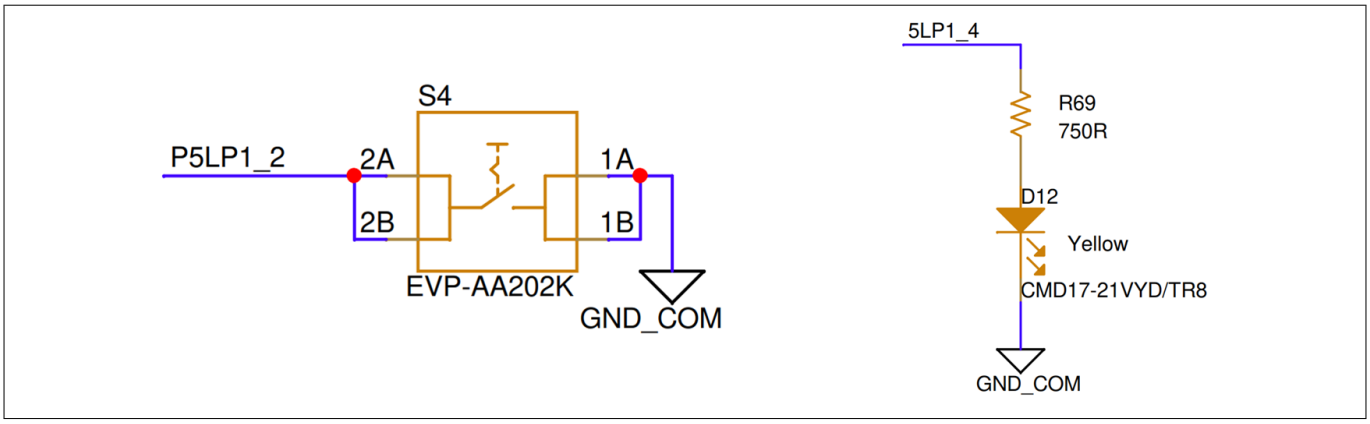

Figure 45 Mode switch and status LED

3.3 Shield board (SHLD-55913-MHIWIFI)

The shield board is designed around the Adafruit wing board. It provides a connector interface for SPI communication and power-related connections. The shield board allows the kit to connect to the hybrid inverter's power board, enabling it to power up the kit. Additionally, it includes an interface to supply power to the control board of the hybrid inverter.

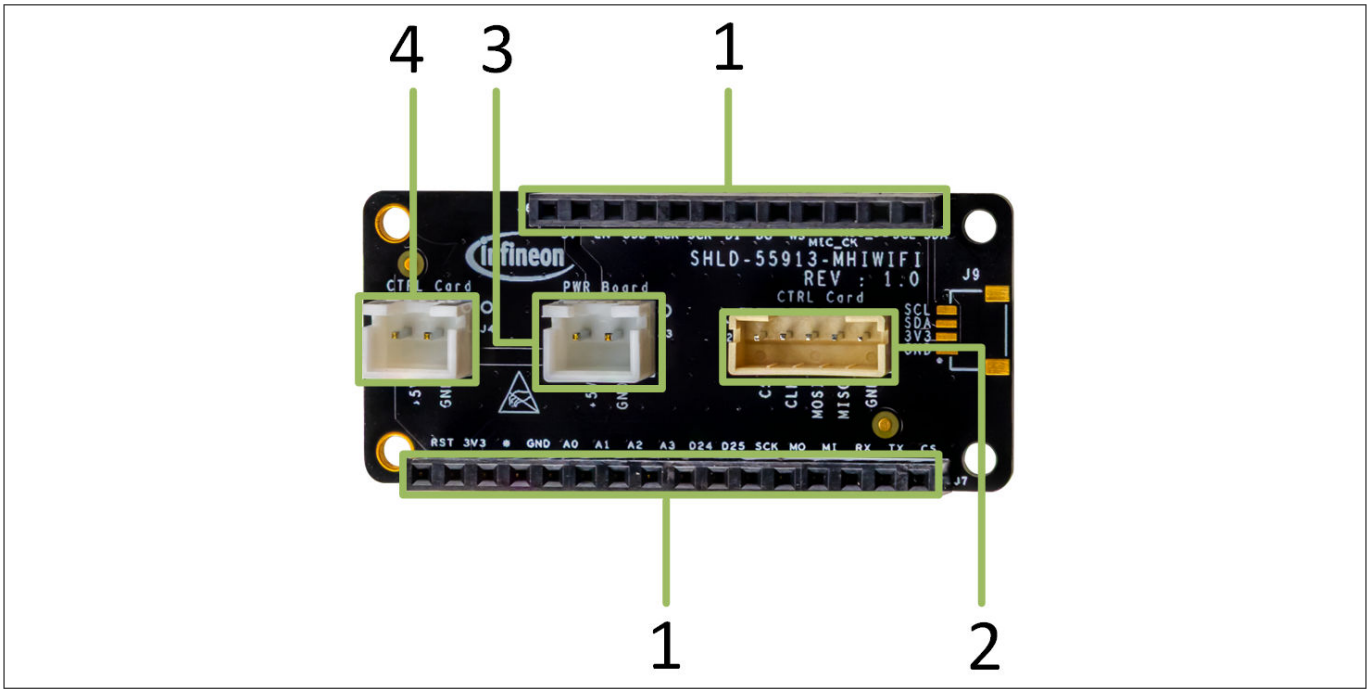

Figure 46 Shield board (SHLD-55913-MHIWIFI)

The shield board includes the following components:

- Adafruit-compatible GPIO headers (J7, J8)
- SPI connector header (J2)
- Power board connector header (J3)
- Control board connector header (J4)

Figure 47 provides the pinout details of the shield board.

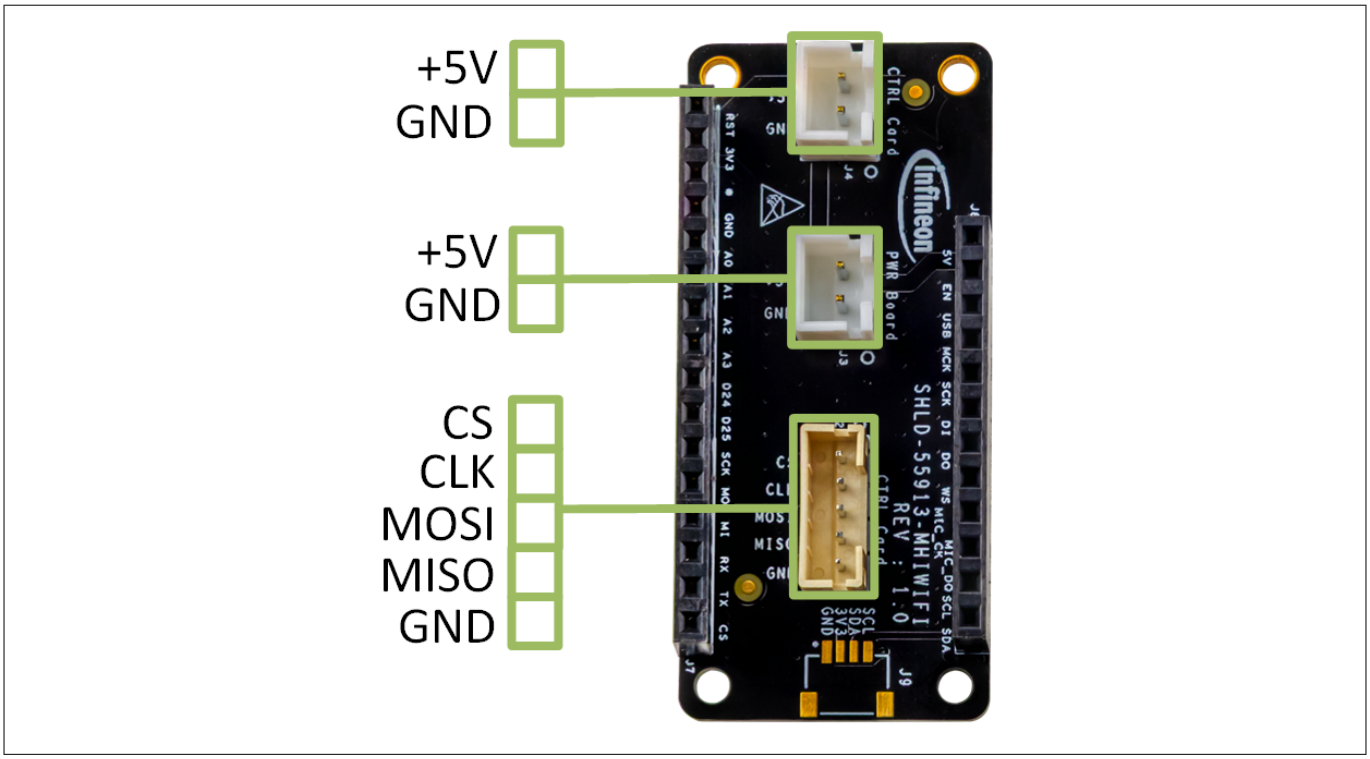

Figure 47 Pinout of the shield board

3.3.1 SPI header

The SPI header (J2) is used to enable serial communication with the control board through the SPI interface.

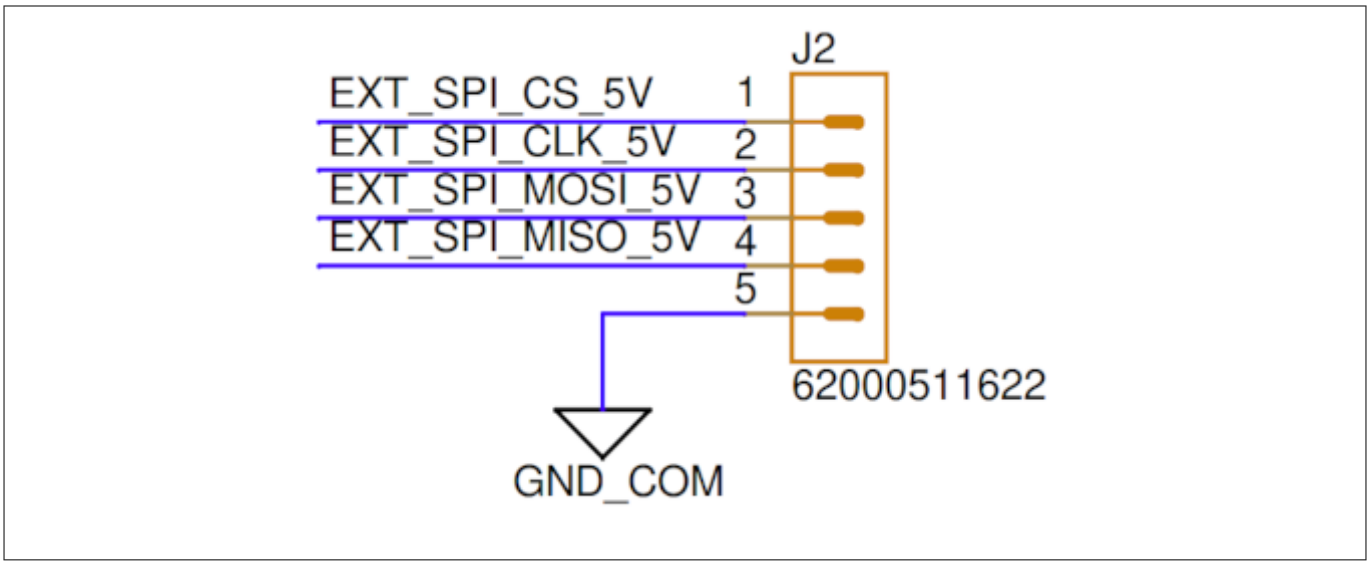

Figure 48 SPI communication header

3.3.2 Power supply headers

The shield board includes two headers for connecting a 5 V DC supply between the power board and control board:

- **J3**: This header is used to connect the connectivity kit to the power board for a 5 V DC input. Alternatively, any 5 V DC supply capable of providing a maximum current of 1 A can be used to power the connectivity kit through this header
- **J4**: This header supplies power to the isolated communication section of the control board

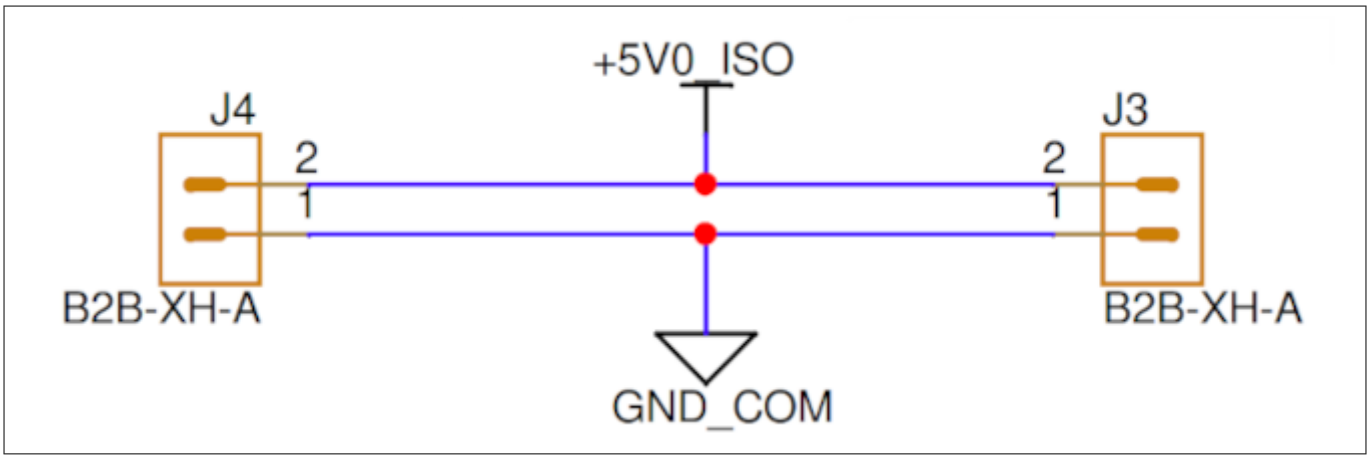

Figure 49 Power supply headers

3.4 Bill of materials

Table 4 BOM for the KIT-55913-PROTO baseboard

Item	Designator	Quantity	Value	Description	Manufacturer	Mounting status
1	C1,C3,C4,C7,C9,C11,C24,C26,C28,C29,C31,C32,C33,C34,C36,C37,C40,C42,C44,C46,C48,C49,C51,C52,C56,C57,C58,C59,C60,C61,C69	31	100 nF	CAP/CERA/100 nF/25 V/10%/X7R (EIA)/-55°C to 125°C/0402/SMD/-	Samsung	-
2	C2,C21,C66	3	10 uF	CAP/CERA/10 uF/16 V/10%/X5R (EIA)/-55°C to 85°C/0603(1608)/SMD/-	muRata	-
3	C5,C6,C8,C10,C14,C20,C23,C25,C27,C30,C39,C41,C43,C45,C47,C54,C55	17	1 uF	CAP/CERA/1 uF/-/10%/X5R (EIA)/-55°C to 85°C/0402/SMD/-	muRata	-
4	C12	1	22 uF	CAP/CERA/22 uF/16 V/20%/X6S (EIA)/-55°C to 125°C/0805/SMD/-	muRata	-
5	C13,C17,C71	3	4.7 uF	CAP/CERA/4.7 uF/16 V/20%/X5R (EIA)/-55°C to 125°C/0402/SMD/-	Samsung	-

(table continues...)

Table 4 (continued) BOM for the KIT-55913-PROTO baseboard

Item	Designator	Quantity	Value	Description	Manufacturer	Mounting status
6	C16	1	47 uF	CAP/CERA/47 uF/6.3 V/20%/X5R (EIA)/-55°C to 85°C/0603(1608)/SMD/-	muRata	-
7	C19	1	150 pF	CAP/CERA/150 pF/50 V/5%/C0G (EIA)/NP0/-55°C to 125°C/0402/SMD/-	Yageo	-
8	C22,C62	2	10 nF	CAP/CERA/10 nF/50 V/10%/X7R (EIA)/-55°C to 125°C/0402/SMD/-	Kemet	-
9	C35	1	150 nF	CAP/CERA/150 nF/-/10%/X5R (EIA)/-55°C to 85°C/ 0402/SMD/-	Yageo	-
10	C63	1	10 pF	CAP/CERA/10 pF/16 V/5%/C0G (EIA)/NP0/-55°C to 125°C/0402/SMD/-	Kemet	-
11	C64,C65	2	10 pF	CAP/CERA/10 pF/16 V/5%/C0G (EIA)/NP0/-55°C to 125°C/0402/SMD/-	Kemet	DNI
12	C70	1	100 pF	CAP/CERA/100 pF/50 V/5%/C0G (EIA)/NP0/-55°C to 125°C/0402/SMD/-	AVX	-
13	C72	1	100 nF	CAP/CERA/100 nF/-/20%/X5R (EIA)/-55°C to 85°C/ 0201/SMD/-	muRata	-
14	D1,D5	2	BAT60A	Silicon Schottky Diode, Power Supply Applications, 10 V, 3 A	Infineon Technologies	-
15	D2	1	RGB	LED, Enable Smaller Board Size Higher Packing Density	Everlight	-
16	D4,D6	2	ESD150-B1-W0201	Tvs Diode, Bi-directional ESD protection device	Infineon Technologies	-
17	D7	1	Red	Red SMD Chip LED with Milky White Diffused Resin, 620 nm, 20 mA, 2.2 V	ROHM Semiconductors	-

(table continues...)

Table 4 (continued) BOM for the KIT-55913-PROTO baseboard

Item	Designator	Quantity	Value	Description	Manufacturer	Mounting status
18	D9,D10	2	ESD120-B1-W0201	Bi-Directional ESD Protection Device, 2.1 V, 0.28 pF	Infineon Technologies	-
19	D12	1	CMD17-21 VYD/TR8	LED, YELLOW, DIFFUSED, 585 nm, 2.0 V, 0805	VCC	-
20	D13,D14	2	ESD5 V0D5-TP	DIO, TVS, UNIDIR, 5 V, 18.6 V, 174 W, SOD-523	Micro Commercial Components	-
21	FB1,FB2,FB3	3	180R	IND/FERR/180R/1.5 A/25%/-55°C to 125°C/90 mR/603(1608)/ Inductor,Chip;1.60 mm L X 0.80 mm W X 0.95 mm H/SMD/-	muRata	-
22	J1	1	PH1-05-UA	Header 5 Position, 2.54 mm Pitch Vertical Single Row Gold Plated, 3 A, 250 VAC	Adam Tech	DNI
23	J2	1	PPTC061L FBN-RC	CONN, HDR, FEMALE, SINGLE, 6POS, 2.54 mm, TIN, STR, TH	Sullins	DNI
24	J3	1	PPTC161L FBN-RC	Header Female, 16 Position, 2.54 mm, Single Row, Vertical, 3 A, 250A V	Sullins	-
25	J4	1	PPTC121L FBN-RC	Header, 12 Position, 2.54 mm Pitch, Vertical, Single Row, Female CC, ST	Sullins	-
26	J5	1	DX07S024 XJ1R1100	Socket 12X2 Alphanumeric Pinning with 4 Mounting Holes	JAE	-
27	J6	1	U.FL-R-SMT(01)	CONN, U.FL, MALE,RCPT, 6GHz, 50 OHM, GOLD, STR, SMD	Hirose Connectors	-
28	L1	1	2.2 uH	IND/STD/2.2 uH/ 3.7A/20%/-40°C to 125°C/-/SMD/-/SMD/-	Coilcraft	-
29	MP13,MP14,MP15, MP16	4	PST-6-01	Board Support Resting Mount/Snap Lock Nylon 0.375" (9.53 mm) 3/8"	Essentra Components	-

(table continues...)

Table 4 (continued) BOM for the KIT-55913-PROTO baseboard

Item	Designator	Quantity	Value	Description	Manufacturer	Mounting status
30	Q3,Q4,Q5	3	BSS138N H6327XTS A2	MOSFET N-CH 60 V 230MA SOT23-3	Infineon Technologies	-
31	R1	1	0R	RES/STD/0R/63 mW/0R/0 ppm/K/-55°C to 155°C/ 0402(1005)/SMD/-	Yageo	DNI
32	R2,R3	2	5.1kR	RES/STD/5.1KR/ 63mW/5%/-/-55°C to 155°C/0402/SMD/-	Yageo	-
33	R4,R13,R14,R18,R 35,R127,R141,R14 2,R154,R155	10	0R	RES/STD/0R/100 mW/1%/200 ppm/K/-55°C to 155°C/ 0603(1608)/SMD/-	Yageo	-
34	R5,R19	2	22R	RES/STD/22R/63 mW/1%/100 ppm/K/-55°C to 155°C/ 0402/SMD/-	Yageo	-
35	R6,R77	2	49.9kR	RES/STD/49.9KR/63 mW/1%/100 ppm/K/-55°C to 155°C/ 0402(1005)/SMD/-	Yageo	-
36	R7	1	10kR	RES/STD/10KR/50 mW/-/-/-55°C to 125°C/ 0201/SMD/-	Walsin Technology	-
37	R8	1	49.9kR	RES/-/49.9KR/50 mW/-/-/-/0201/SMD/-	Stackpole Electronics	-
38	R9	1	1.5R	RES/STD/1.5R/ 100mW/5%/-/-55°C to 155°C/0603(1608)/SMD/-	Panasonic	-
39	R10	1	280R		Vishay	-
40	R11	1	68kR	RES/STD/68KR/63 mW/1%/100 ppm/K/-55°C to 155°C/ 0402/SMD/-	Yageo	-
41	R12,R79,R81	3	15kR	RES/-/15KR/-/ 0.1%/-/-55°C to 155°C/0402/SMD/-	Panasonic	-
42	R15,R26,R28,R45, R92,R93,R156,R15 7	8	0R	RES/STD/0R/63 mW/0R/0 ppm/K/-55°C to 155°C/ 0402(1005)/SMD/-	Yageo	-

(table continues...)

Table 4 (continued) BOM for the KIT-55913-PROTO baseboard

Item	Designator	Quantity	Value	Description	Manufacturer	Mounting status
43	R16	1	249kR	RES/-/249KR/63 mW/1%/-/-55°C to 155°C/0402/SMD/-	Yageo	-
44	R23,R24,R25,R27, R29,R30,R31,R38, R146	9	33R	RES/STD/33R/100 mW/1%/100 ppm/K/-55°C to 155°C/ 0402(1005)/SMD/-	Panasonic	-
45	R36,R122,R135,R148,R149,R152,R153	7	0R	RES/STD/0R/100 mW/1%/200 ppm/K/-55°C to 155°C/ 0603(1608)/SMD/-	Yageo	DNI
46	R44	1	100kR	RES/STD/100KR/63 mW/5%/-/-55°C to 155°C/0402/SMD/-	Yageo	DNI
47	R46,R47	2	1.5kR	RES/STD/1.5KR/63 mW/ 0.1%/25 ppm/K/-55°C to 155°C/0402(1005)/SMD/-	Panasonic	-
48	R48,R63,R64,R65, R126,R151	6	100kR	RES/STD/100KR/63 mW/5%/-/-55°C to 155°C/0402/SMD/-	Yageo	-
49	R49,R50,R51,R91, R112,R116,R120,R131	8	10kR	RES/-/10KR/-/1%/-/-55°C to 155°C/0402/SMD/-	Panasonic	-
50	R53,R72	2	4.7kR	RES/STD/4.7KR/63 mW/1%/100 ppm/K/-55°C to 155°C/ 0402(1005)/SMD/-	Yageo	-
51	R54,R55	2	4.7kR	RES/STD/4.7KR/63 mW/1%/100 ppm/K/-55°C to 155°C/ 0402(1005)/SMD/-	Yageo	DNI
52	R56,R132,R133,R134	4	10kR	RES/-/10KR/-/1%/-/-55°C to 155°C/0402/SMD/-	Panasonic	DNI
53	R66	1	330R	RES/STD/330R/100 mW/5%/-/-55°C to 155°C/0402/SMD/-	Panasonic	-
54	R67	1	100R	RES/STD/100R/100 mW/1%/100 ppm/K/-55°C to 155°C/ 0402(1005)/SMD/-	Panasonic	-
55	R68	1	47R	RES/-/47R/-/1%/-/-55°C to 155°C/0402/SMD/-	Panasonic	-

(table continues...)

Table 4 (continued) BOM for the KIT-55913-PROTO baseboard

Item	Designator	Quantity	Value	Description	Manufacturer	Mounting status
56	R69	1	750R	RES/-/750R/-/1%/-/-55°C to 155°C/0402/SMD/-	Panasonic	-
57	R71	1	120kR	RES/-/ 120KR/-/1%/-/-55°C to 155°C/0402/SMD/-	Panasonic	-
58	R78	1	49.9kR	RES/STD/49.9KR/63 mW/1%/100 ppm/K/-55°C to 155°C/ 0402(1005)/SMD/-	Yageo	DNI
59	R80,R82	2	30kR	RES/STD/30KR/63 mW/1%/-/-55°C to 155°C/0402/SMD/-	Yageo	-
60	R94,R113,R117,R121	4	12kR	RES/-/12KR/-/1%/-/-55°C to 155°C/0402/SMD/-	Panasonic	-
61	R95,R96	2	1.5kR	RES/STD/1.5KR/63 mW/ 0.1%/25 ppm/K/-55°C to 155°C/0402(1005)/SMD/-	Panasonic	DNI
62	R103,R104,R105,R106,R108	5	47kR	RES/STD/47KR/63 mW/1%/-/-55°C to 155°C/0402/SMD/-	Vishay	DNI
63	R107	1	47kR	RES/STD/47KR/63 mW/1%/-/-55°C to 155°C/0402/SMD/-	Vishay	-
64	R128,R129	2	0R	RES/STD/0R/125 mW/0R/0 ppm/K/-55°C to 155°C/ 0805(2012)/SMD/-	Yageo	-
65	R130	1	200kR	RES/-/ 200KR/-/1%/-/-55°C to 155°C/0402/SMD/-	Panasonic	-
66	R147	1	12.1kR	RES/-/ 12.1KR/-/1%/-/-55°C to 155°C/0402/SMD/-	Panasonic	-
67	R150	1	22kR	RES/STD/22KR/100 mW/-/-/-55°C to 155°C/ 0402/SMD/-	Panasonic	-
68	R158,R159,R160,R161	4	0R	RES/STD/0R/-/-/-/-55°C to 155°C/ 0201(0603)/SMD/-	Yageo	-

(table continues...)

Table 4 (continued) BOM for the KIT-55913-PROTO baseboard

Item	Designator	Quantity	Value	Description	Manufacturer	Mounting status
69	R162	1	0R	RES/STD/0R/-/-/-/-55°C to 155°C/ 0201(0603)/SMD/-	Yageo	DNI
70	S1,S2,S4	3	E VP-AA202K	Tactile Switch, 15 V, 20 mA	Panasonic	-
71	S3	1	E VP-AA402W	Tactile Switch, Portable Electronic Equipment Application, 15VDC, 20 mA	Panasonic	-
72	TP1,TP2,TP3,TP4,TP5,TP7,TP27,TP28	8	-	-	-	-
73	TP8,TP10,TP11,TP12,TP13,TP29,TP34,TP36	8	-	-	-	-
74	TP35	1	GND_COM	-	-	-
75	U1	1	IFX_CY8C5868LTI-LP039	Programmable System-on-Chip (PSOC™)	Infineon Technologies	-
76	U2,U8	2	TXS0104ERGYR	4-Bit Bidirectional Voltage Level Translator	Texas Instruments	-
77	U3	1	AW-CU640	AIROC™ CYW55913 Connected MCU with Wi-Fi & Bluetooth® Low Energy 5.4	AzureWave	-
78	U4	1	SIP32408DNP-T1-GE4	IC, LOAD SWITCH, 1CH, 3.5 A, 1.1 V-5.5 V, 0.045 OHM, TDFN4	Vishay	-
79	U5	1	SLS32AIA010MLUSON10XTMA2	IC, INFINEON, OPTIGA™ TRUST M V3, High-end Security Controller	Infineon Technologies	-
80	U6	1	APS6404L-SQH-ZR	SPI/QPI PSRAM, Ultra Low Power Half Sleep Mode with data Retention, 64 Mb	AP Memory	-
81	U7	1	S25FS128SAGNFI103	128Mb FS-S Flash, SPI Multi I/O, Clock Polarity and Phase Modes 0 and 3	Infineon Technologies	-

(table continues...)

Table 4 (continued) BOM for the KIT-55913-PROTO baseboard

Item	Designator	Quantity	Value	Description	Manufacturer	Mounting status
82	U12,U13	2	TXS0108E RGYR	8 Bit Bi-Directional, Level Shifting, Voltage Translator for Open Drain	Texas Instruments	-
83	U14	1	PCA9306 DCUT	IC, TRANSLATOR, BIDIRECTIONAL, 8VSSOP	Texas Instruments	-
84	U15	1	TLS205B0 EJ V	Low Dropout, Low Noise, Linear Voltage Post Regulator, 500 mA	Infineon Technologies	-
85	U16	1	IR3823AM TRPBF	3 A Single Voltage Synchronous Buck Regulator	Infineon Technologies	-
86	U17	1	TPS3703A 4120DSE RQ1	Overvoltage and Undervoltage Reset IC With Time Delay and Manual Reset	Texas Instruments	-
87	Y1	1	32.77 kHz	Ultra-Low Power Quartz XTAL Replacement Health, 32.768 kHz	SiTime	-

Table 5 BOM for the SHLD-55913-MHIWIFI wing board

Item	Designator	Quantity	Value	Description	Manufacturer	Mounting Status
1	J2	1	62000511622	Male Vertical Shrouded Header, 5 Pins, 2 mm Pitch	Würth Elektronik	-
2	J3,J4	2	B2B-XH-A	Shrouded Header 2-pin Vertical, 3 A, 250 V	JST Corporation	-
3	J7	1	2830_16	Stacking Female Header for Feather, 16 Pin, Vertical, Single Row, 3 A, 20 mOhm	Adafruit	-

(table continues...)

Table 5 (continued) BOM for the SHLD-55913-MHIWIFI wing board

Item	Designator	Quantity	Value	Description	Manufacturer	Mounting Status
4	J8	1	2830_12	Stacking Female Header For Feather, 12 Pin, Vertical, Single Row, 3A, 20 mOhm	Adafruit	-
5	J9	1	SM04B-SRSS-TB	SMT Header, Side Entry, 1 mm pitch, 4 pin, Right Angle, 0.7 A, 50 V	JST Corporation	DNI
6	MP1,MP2,MP3,MP4	4	XHP-2	Receptacle Housing	JST Corporation	-
7	MP5,MP6	2	620005113322	WR-WTB Female Terminal Housing	Würth Elektronik	-
8	MP7,MP8,MP9,MP10,MP11	5	62000113722 DEC	Female Crimp Terminal, 2 mm Pitch, Vertical	Würth Elektronik	-
9	MP12,MP13	2	ASXHSXH22K152	6" Inside Length, Double End Leads Female Crimp Terminal Cable Assembly	JST Corporation	-
10	MP14,MP15,MP16,MP17,MP18	5	620100126015	2 mm Pre Crimped Contact	Würth Elektronik	-
11	MP19,MP20	2	ASXHSXH22K254	10" Inside Length, Double End Leads Female Crimp Terminal Cable Assembly	JST Corporation	-

References

Documents

[1] Infineon Technologies AG: *Self-help (Technical documents) for KIT-55913-MHIWIFI*; Available online
[2] Infineon Technologies AG: *Self-help (Technical documents) for the Modular Hybrid Inverter design platform*; Available online

Webpages

[3] Infineon Technologies AG: *Wireless connectivity*; Available online
[4] Infineon Technologies AG: *Modular Hybrid Inverter design platform*; Available online

Support resources

[5] *Infineon Support*; Available online
[6] *Infineon Developer Community*; Available online
[7] *Local sales office locations*; Available online

Revision history

Document version	Date of release	Description of changes
**	2025-10-29	Initial release

Trademarks

The Bluetooth® word mark and logos are registered trademarks owned by Bluetooth SIG, Inc., and any use of such marks by Infineon is under license.

PSOC™, formerly known as PSoC™, is a trademark of Infineon Technologies. Any references to PSoC™ in this document or others shall be deemed to refer to PSOC™.

Trademarks

All referenced product or service names and trademarks are the property of their respective owners.

Edition 2025-10-29

Published by

Infineon Technologies AG

81726 Munich, Germany

© 2025 Infineon Technologies AG

All Rights Reserved.

Do you have a question about any aspect of this document?

Email: erratum@infineon.com

Document reference
IFX-dlr1744182738581

For further information on the product, technology, delivery terms and conditions and prices please contact your nearest Infineon Technologies office (www.infineon.com)

Warnings

Due to technical requirements products may contain dangerous substances. For information on the types in question please contact your nearest Infineon Technologies office.

Except as otherwise explicitly approved by Infineon Technologies in a written document signed by authorized representatives of Infineon Technologies, Infineon Technologies' products may not be used in any applications where a failure of the product or any consequences of the use thereof can reasonably be expected to result in personal injury.