AIROC™ CYW30739: CYW30739B2-P5-EVK01 Module Evaluation Kit user guide

About this document

Scope and purpose

The Infineon AIROC™ CYW30739 Matter/Thread/IEEE 802.15.4 + Bluetooth® Low Energy module Evaluation Kit (CYW30739B2-P5-EVK01) enables evaluation, prototyping, and development of a wide array of Internet of Things (IoT) applications using the module, CYW30739B2-P5TAI051, a low-power and high-performance Bluetooth® Low Energy MCU. The system features an Arm® Cortex®-M4 core with the programmable and reconfigurable analog and digital blocks.

It is a combination of an MCU with the following:

- Σ-Δ ADC core designed for audio (13 bits) and DC (12 bits) measurement
- Serial communication interfaces such as UART, I^2C, I^2S, and Quad-SPI
- Six internal pulse width modulators (PWMs), labeled PWM0-5
- Three options in DBI Type-C corresponding to 8-bit, 9-bit, and 16-bit modes
- A pulse-code modulation (PCM) interface that can connect to linear PCM codec devices in master or slave mode
- Two pulse density modulation (PDM) channels and one I^2S channel with time division multiplexed (TDM) mode
- 2 MB external flash memory
- Temperature and humidity sensor
- OLED display

Intended audience

This document is intended for users interested in the CYW30739B2-P5-EVK01.

Important notice

“Evaluation Boards and Reference Boards” shall mean products embedded on a printed circuit board (PCB) for demonstration and/or evaluation purposes, which include, without limitation, demonstration, reference and evaluation boards, kits and design (collectively referred to as “Reference Board”).

Environmental conditions have been considered in the design of the Evaluation Boards and Reference Boards provided by Infineon Technologies. The design of the Evaluation Boards and Reference Boards has been tested by Infineon Technologies only as described in this document. The design is not qualified in terms of safety requirements, manufacturing and operation over the entire operating temperature range or lifetime.

The Evaluation Boards and Reference Boards provided by Infineon Technologies are subject to functional testing only under typical load conditions. Evaluation Boards and Reference Boards are not subject to the same procedures as regular products regarding returned material analysis (RMA), process change notification (PCN) and product discontinuation (PD).

Evaluation Boards and Reference Boards are not commercialized products, and are solely intended for evaluation and testing purposes. In particular, they shall not be used for reliability testing or production. The Evaluation Boards and Reference Boards may therefore not comply with CE or similar standards (including but not limited to the EMC Directive 2004/EC/108 and the EMC Act) and may not fulfill other requirements of the country in which they are operated by the customer. The customer shall ensure that all Evaluation Boards and Reference Boards will be handled in a way which is compliant with the relevant requirements and standards of the country in which they are operated.

The Evaluation Boards and Reference Boards as well as the information provided in this document are addressed only to qualified and skilled technical staff, for laboratory usage, and shall be used and managed according to the terms and conditions set forth in this document and in other related documentation supplied with the respective Evaluation Board or Reference Board.

It is the responsibility of the customer’s technical departments to evaluate the suitability of the Evaluation Boards and Reference Boards for the intended application, and to evaluate the completeness and correctness of the information provided in this document with respect to such application.

The customer is obliged to ensure that the use of the Evaluation Boards and Reference Boards does not cause any harm to persons or third-party property.
The Evaluation Boards and Reference Boards and any information in this document is provided "as is" and Infineon Technologies disclaims any warranties, express or implied, including but not limited to warranties of non-infringement of third-party rights and implied warranties of fitness for any purpose, or for merchantability.

Infineon Technologies shall not be responsible for any damages resulting from the use of the Evaluation Boards and Reference Boards and/or from any information provided in this document. The customer is obliged to defend, indemnify and hold Infineon Technologies harmless from and against any claims or damages arising out of or resulting from any use thereof.

Infineon Technologies reserves the right to modify this document and/or any information provided herein at any time without further notice.

Safety precautions

Note: *Please note the following warnings regarding the hazards associated with development systems*

Table 1 Safety precautions

	**Caution:** *The evaluation or reference board contains parts and assemblies sensitive to electrostatic discharge (ESD). Electrostatic control precautions are required when installing, testing, servicing or repairing the assembly. Component damage may result if ESD control procedures are not followed. If you are not familiar with electrostatic control procedures, refer to the applicable ESD protection handbooks and guidelines.*

Table of contents

About this document **1**
Important notice **2**
Safety precautions **3**
Table of contents **4**
1 Introduction **6**
1.1 CYW30739B2-P5-EVK01 kit contents 6
1.2 CYW30739B2-P5-EVK01 details 7
1.3 Building Environment Setup 8
1.3.1 Linux 8
1.3.1.1 Installing ModusToolbox™ 8
1.3.1.2 Clone the Matter SDK and checkout submodules 9
1.3.2 Windows 9
1.3.3 MacOS 9
1.4 Building 9
1.5 Factory data 9
1.5.1 Commissionable data 9
1.5.2 Device Information 10
1.5.3 DAC/DAC key/PAI certificate/Certificate declaration 10
1.5.4 Use provisioned OPTIGA™ Trust M 11
1.6 Flashing the application 11
1.6.1 Enter recovery mode 11
1.6.2 Run Flash Script 11
1.7 Getting started 12
1.7.1 Add accessories to Apple Home 12
1.8 IoT resources and technical support 13
2 Kit operation **14**
2.1 Theory of operation 14
2.2 Buttons 17
2.3 Jumpers 17
2.4 USB to UART bridge 18
2.5 Kit power supply 18
3 Hardware **19**
3.1 Carrier module 19
3.1.1 Antenna 19
3.1.2 Crystal 19
3.1.3 Temperature and humidity sensor 19
3.2 Baseboard 20
3.2.1 Reset 20
3.2.2 Power 20
3.2.3 KitProg3 21
3.2.4 Analog MIC 22
3.2.5 Digital MIC 22
3.2.6 Ambient light sensor 22
3.2.7 Thermistor 23
3.3 OLED Display 23
4 CYW30739 device I/O mapping **24**

Table of contents

References **26**
Glossary **27**
Revision history **29**
Disclaimer **30**

1 Introduction

The Infineon AIROC™ CYW30739 Matter/Thread/IEEE 802.15.4 + Bluetooth® Low Energy module Evaluation Kit (CYW30739B2-P5-EVK01) enables evaluation, prototyping, and development of a wide array of Internet of Things (IoT) applications using the module, CYW30739B2-P5TAI051, a low-power and high-performance Bluetooth® Low Energy MCU.

The CYW30739B2-P5TAI051 module is a multi-protocol solution wireless module solution with an integrated 2.4 GHz transceiver which features Matter 1.2, Thread 1.3, and Bluetooth® 5.3 compliancy.
The CYW30739B2-P5TAI051 includes onboard crystal oscillators, 2 MB flash, passive components, and the CYW30739 silicon device.

The CYW30739 Matter/Thread/IEEE 802.15.4 + Bluetooth® Low Energy module Evaluation Kit (CYW30739B2-P5-EVK01) and ModusToolbox™ form a powerful but easy-to-use toolset that helps the developers create highly capable IoT solutions in Matter applications.

In addition, the kit features an onboard programmer/debugger (KitProg3). It supports 1.8 V, 2.5 V, 3.0 V, 3.3 V, and coin-cell operation.

The following EVK is available through through our distributors.

- CYW30739B2-P5-EVK01 – Trace antenna module EVK

1.1 CYW30739B2-P5-EVK01 kit contents

The CYW30739B2-P5-EVK01 kit includes the following:

- AIROC™ CYW30739 Matter/Thread/IEEE 802.15.4 + Bluetooth® Low Energy Module Evaluation Kit (CYW9BTMDM2BASE1 + CYW930739MD1M2ADP + OLED display)
- USB Type-A to Micro-B cable
- Quick Start Guide



Figure 1 CYW30739B2-P5-EVK01 kit contents

Contact the nearest Infineon sales office for assistance for any missing part in the kit contents: www.infineon.com/support.

1.2 CYW30739B2-P5-EVK01 details

CYW30739B2-P5-EVK01 comes with the following features.

- CYW30739B2-P5TAI051 module with onboard Trace antenna
- Supports 1.8 V, 2.5 V, 3.0 V, 3.3 V, and coin-cell (3 V) operation of the CYW30739B2-P5-EVK01 device
- Reset button, Mode button, Recover button, and User button
- Onboard Micro-USB connector (J1) for programming and debugging purposes
- Low-power temperature and humidity digital sensor
- OLED display
- Expansion header for IO and SPINEL UART

Default jumper settings are given in Table 1 and Figure 2.

Table 1 Default jumper configurations on the EVK

Jumper ref des	Jumper description	Default state
J6	Current measurement	1-2
J7	LED/MIC selection	1-3, 2-4
J8	HCI flow control	1-3, 2-4
J9	Debug UART	1-2, 3-4, 5-7, 6-8
J10	Power selection	7-8
J11	Reset selection	2-3

Figure 2 highlights the LEDs provided on CYW30739B2-P5-EVK01.

- D2 is controlled with 1 GPIO (P28) as User LED
- D3 indicates the HCI UART status
- D4 indicates the Debug UART status
- D5 indicates the KitProg3 status
- D6 indicates that power is ON

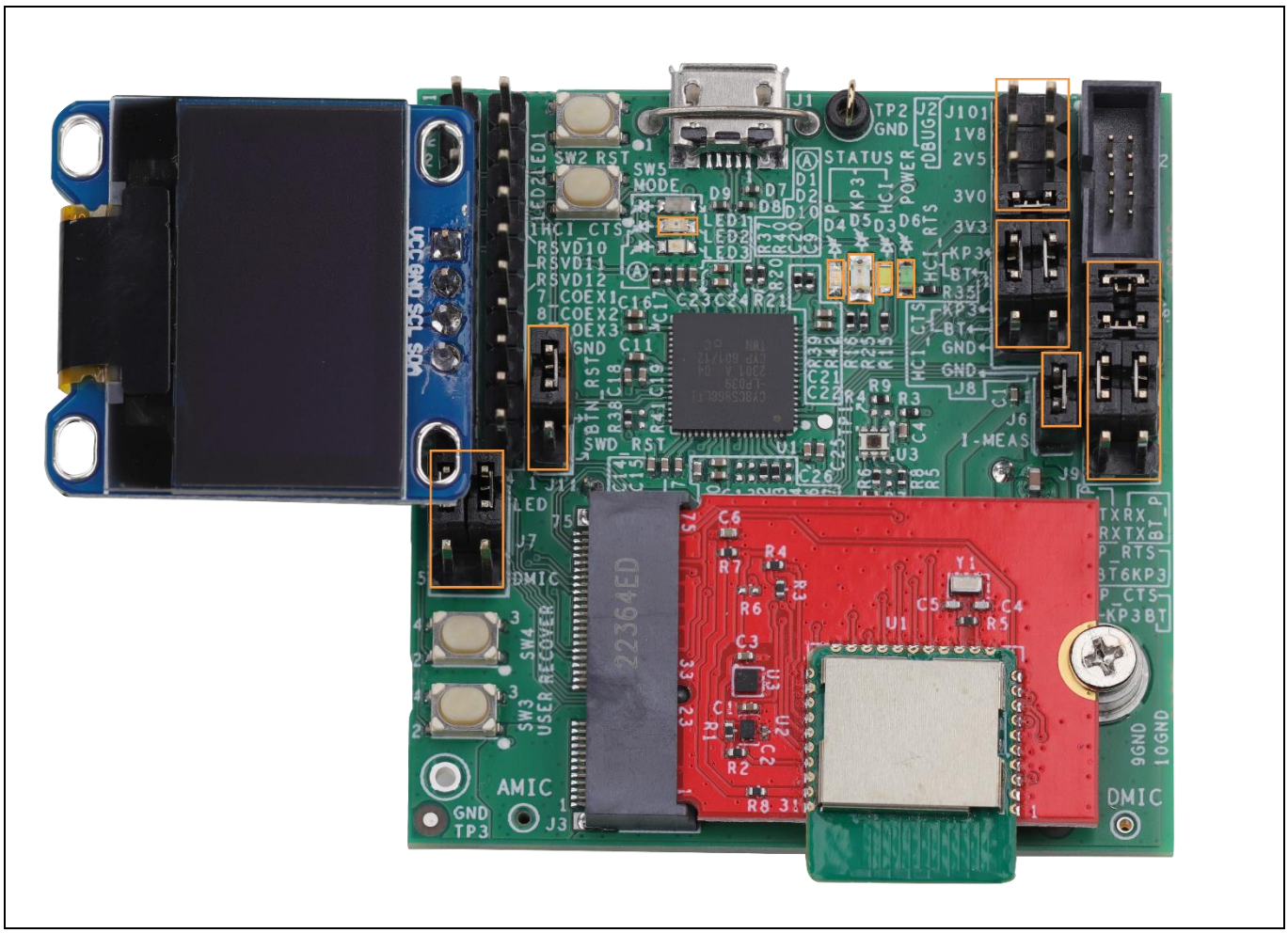

Figure 2 CYW30739B2-P5-EVK01 jumpers and LEDs

1.3 Building Environment Setup

1.3.1 Linux

1.3.1.1 Installing ModusToolbox™

Follow the ModusToolbox™ tools package installation guide to download and install ModusToolbox™.

ModusToolbox™ tools package should be automatically installed in the default location after following the Installation Guide. The Installation Guide provides information on the default location for different operating systems.

If you need to install the ModusToolbox™ tools package in a custom location, you must set the environment variable `CY_TOOLS_PATHS` to */path/to/ModusToolbox/tools_x.x* to specify the location of tools.

```
$ export CY_TOOLS_PATHS=”/path/to/ModusToolbox/tools_x.x”
```

1.3.1.2 Clone the Matter SDK and checkout submodules

Before building the example, checkout the Matter repository and sync submodules using the following command.

```
$ git clone https://github.com/project-chip/connectedhomeip.git ~/connectedhomeip
$ cd ~/connectedhomeip
$ scripts/checkout_submodules.py --platform infineon
$ bash scripts/bootstrap.sh -p all,infineon
```

1.3.2 Windows

Not supported yet.

1.3.3 MacOS

Not supported yet.

1.4 Building

Build the example application:

```
$ cd ~/connectedhomeip
$ scripts/examples/gn_build_example.sh examples/thermostat/infineon/cyw30739
out/cyw30739-thermostat
```

Or use GN/Ninja directly:

```
$ cd ~/connectedhomeip
$ source scripts/activate.sh
$ gn gen --root=examples/thermostat/infineon/cyw30739 out/cyw30739-thermostat
$ ninja -C out/cyw30739-thermostat [thermostat-BOARD_NAME]
```

To delete generated executables, libraries, and object files, use:

```
$ cd ~/connectedhomeip
$ rm -rf out/cyw30739-thermostat
```

1.5 Factory data

1.5.1 Commissionable data

Infineon CYW30739 examples use test passcode, discriminator, and PAKE parameters by default. For a production build, manufacturers should override commissionable data by the following arguments:

- `matter_passcode`: A 27-bit unsigned integer encodes an 8-digit decimal numeric value
- `matter_discriminator`: A 12-bit unsigned integer that identifies the Matter device
- `matter_pake_iteration_count`: The PAKE iteration count associated with the PAKE passcode verifier (1000 to 100000)
- `matter_pake_salt`: The PAKE salt associated with the PAKE passcode verifier (16 to 32 bytes)

To override the default commissionable data, pass the desired values to the `gn_build_example.sh` script as arguments.

```
$ cd ~/connectedhomeip
$ scripts/examples/gn_build_example.sh examples/thermostat/infineon/cyw30739
out/cyw30739-thermostat \
'matter_passcode=20202021' \
'matter_discriminator=3840' \
'matter_pake_iteration_count=1000' \
'matter_pake_salt="U1BBS0UyUCBLZXkgU2FsdA=="'
```

1.5.2 Device Information

Infineon CYW30739 examples support overriding the default device information by the following arguments:

- `matter_vendor_name`: A human-readable name of the vendor
- `matter_vendor_id`: A 16-bit vendor identifier
- `matter_product_name`: A human-readable name of the product
- `matter_product_id`: A 16-bit product identifier
- `matter_serial_number`: A human-readable serial number
- `matter_hardware_version`: A 16-bit hardware version number
- `matter_hardware_version_string`: A human-readable hardware version number

To override the default device information, pass the desired values to the `gn_build_example.sh` script as arguments.

```
$ cd ~/connectedhomeip
$ scripts/examples/gn_build_example.sh examples/thermostat/infineon/cyw30739
out/cyw30739-thermostat \
'matter_vendor_name="Infineon"' \
'matter_vendor_id="0x1388"' \
'matter_product_name="TEST_PRODUCT"' \
'matter_product_id="0x0001"' \
'matter_serial_number="TEST_SN"' \
'matter_hardware_version=30739' \
'matter_hardware_version_string="30739"'
```

1.5.3 DAC/DAC key/PAI certificate/Certificate declaration

Infineon CYW30739 examples use development certifications, keys, and certification declaration (CD) by default. For a production build, manufacturers can provision certifications, keys, and the CD by the following arguments:

- `matter_att_cert`: Matter attestation certificate file which contains PAI, DAC, and DAC key in the PKCS#12 format
- `matter_att_cert_password`: Matter attestation certificate file password
- `matter_cd`: Matter Certification Declaration binary blob

To override the default values, pass the desired values to the `gn_build_example.sh` script as arguments.

```
$ cd ~/connectedhomeip
$ scripts/examples/gn_build_example.sh examples/thermostat/infineon/cyw30739
out/cyw30739-thermostat \
'matter_att_cert="/path/to/att_cert.p12"' \
'matter_att_cert_password="password"' \
'matter_cd="/path/to/cd.der"'
```

1.5.4 Use provisioned OPTIGA™ Trust M

For boards supported by OPTIGA™ Trust M, CYW30739 will provision factory data to the OPTIGA™ Trust M by default for easy development.

The OPTIGA™ Trust M on a production board should come with provisioned factory data. To ensure its optimal use, please configure the OPTIGA™ using the following arguments:

- `use_provisioned_optiga`: Use a provisioned OPTIGA™
- `optiga_dac_object_id`: OPTIGA™ object ID for the DAC
- `optiga_dac_key_object_id`: OPTIGA™ object ID for the DAC key
- `optiga_pai_cert_object_id`: OPTIGA™ object ID for the PAI certificate

To override the default object IDs, pass the desired values to the `gn_build_example.sh` script as arguments.

```
$ cd ~/connectedhomeip
$ scripts/examples/gn_build_example.sh examples/thermostat/infineon/cyw30739
out/cyw30739-thermostat \
'optiga_dac_object_id="0xe0e0"' \
'optiga_dac_key_object_id="0xe0f0"' \
'optiga_pai_cert_object_id="0xe0e8"'
```

The developer must set the object IDs to corresponding values matching the configurations used in the OPTIGA™ provisioning procedure.

1.6 Flashing the application

1.6.1 Enter recovery mode

Put the CYW30739 into the recovery mode before running the flash script.

1. Press and hold the ‘recovery’ button on the board.
2. Press and hold the ‘reset’ button on the board.
3. Release the ‘reset’ button.
4. After one second, release the ‘recovery’ button.

1.6.2 Run Flash Script

On the command line:

```
$ cd ~/connectedhomeip
$ out/cyw30739-thermostat/thermostat-BOARD_NAME.flash.py --port <port>
```

1.7 Getting started

1.7.1 Add accessories to Apple Home

1. Flash the thermostat app to the 30739 device.
2. Find and copy the URL in the UART log on */dev/ttyACMX* serial port (Baudrate: 3,000,000).

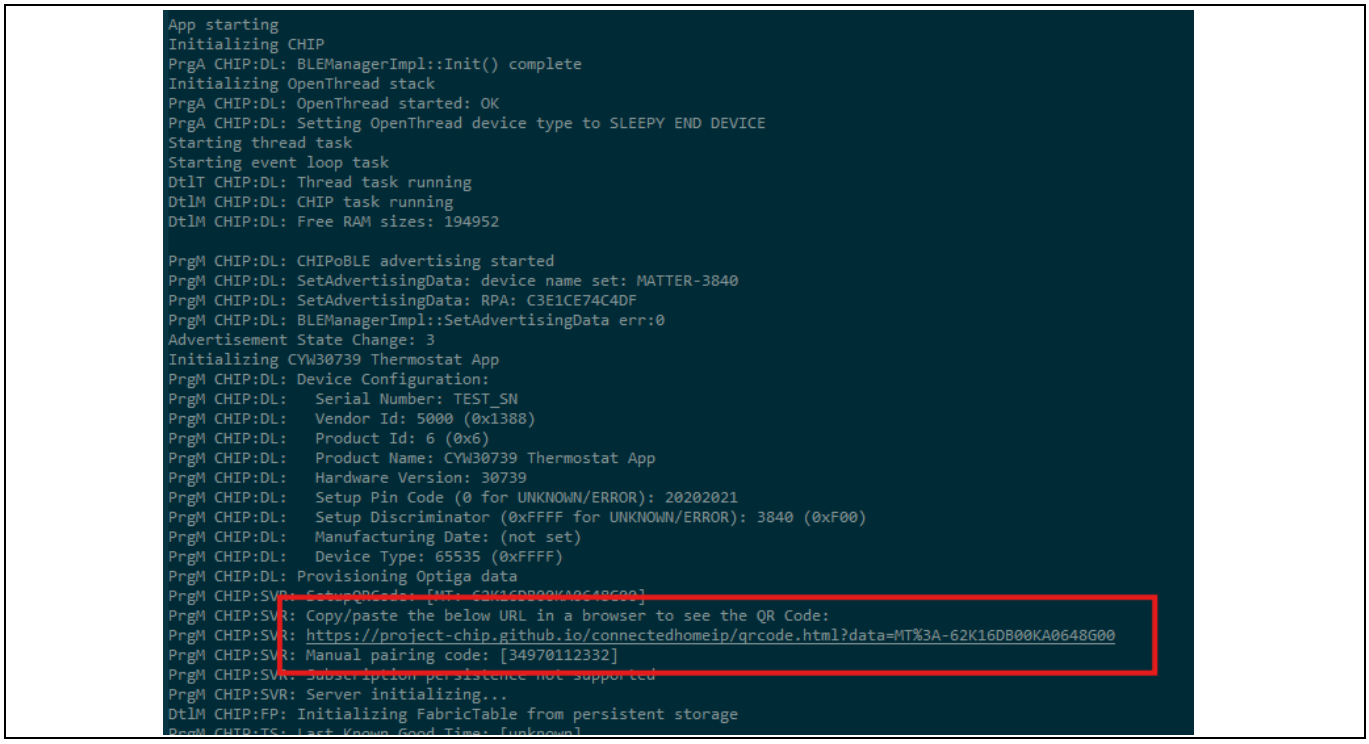

Figure 3 Copy the URL from the UART log

3. A QR code for commissioning would be shown by opening the URL in a web browser.



Figure 4 QR code upon opening the URL

4. Scan the QR code to obtain the Home app.

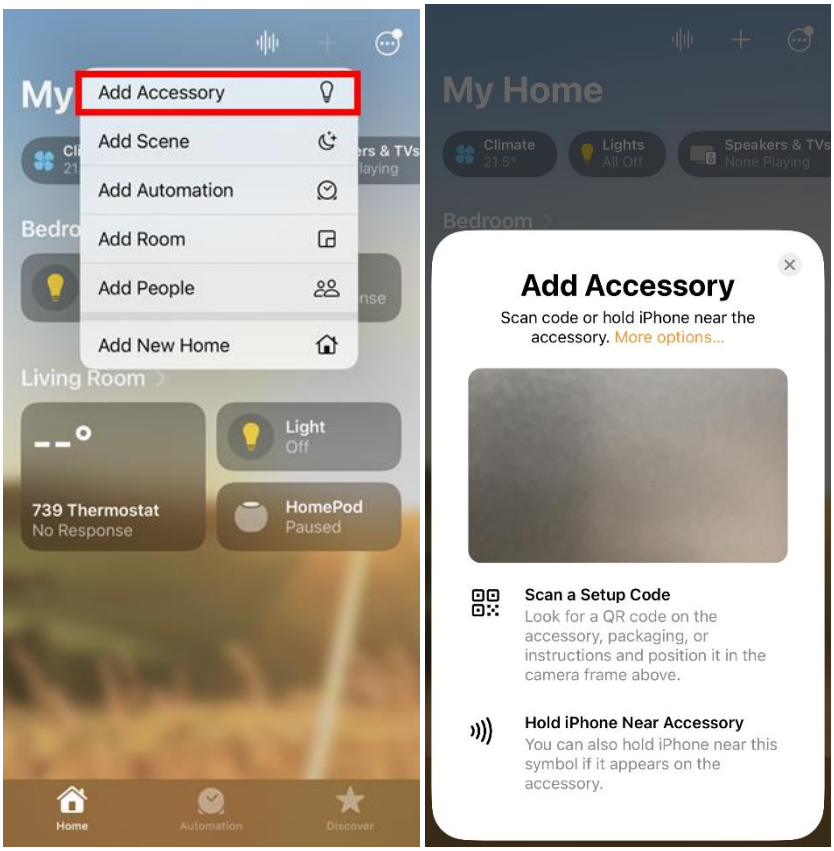

Figure 5 Home app

5. The thermostat should be added to the Apple Home app to display the current temperature.

1.8 IoT resources and technical support

To select the right IoT device for the design, Infineon provides a wide range of product documentation at Infineon wireless connectivity webpage. Also, a professional community at community.infineon.com supplies developers with the latest software and tools to solve common evaluation and integration problems while interacting directly with both Infineon engineers and experienced peers.

2 Kit operation

This chapter introduces CYW30739B2-P5-EVK01 and the features that are used as part of the kit's operation.

2.1 Theory of operation

Figure 6 illustrates the block diagram of CYW30739B2-P5-EVK01 baseboard. This board has a USB-Serial interface/programmer and KitProg3.

It features – four buttons, seven LEDs, one light sensor, one thermistor, one AMIC, one DMIC, two expansion headers, and multiple power supply options.

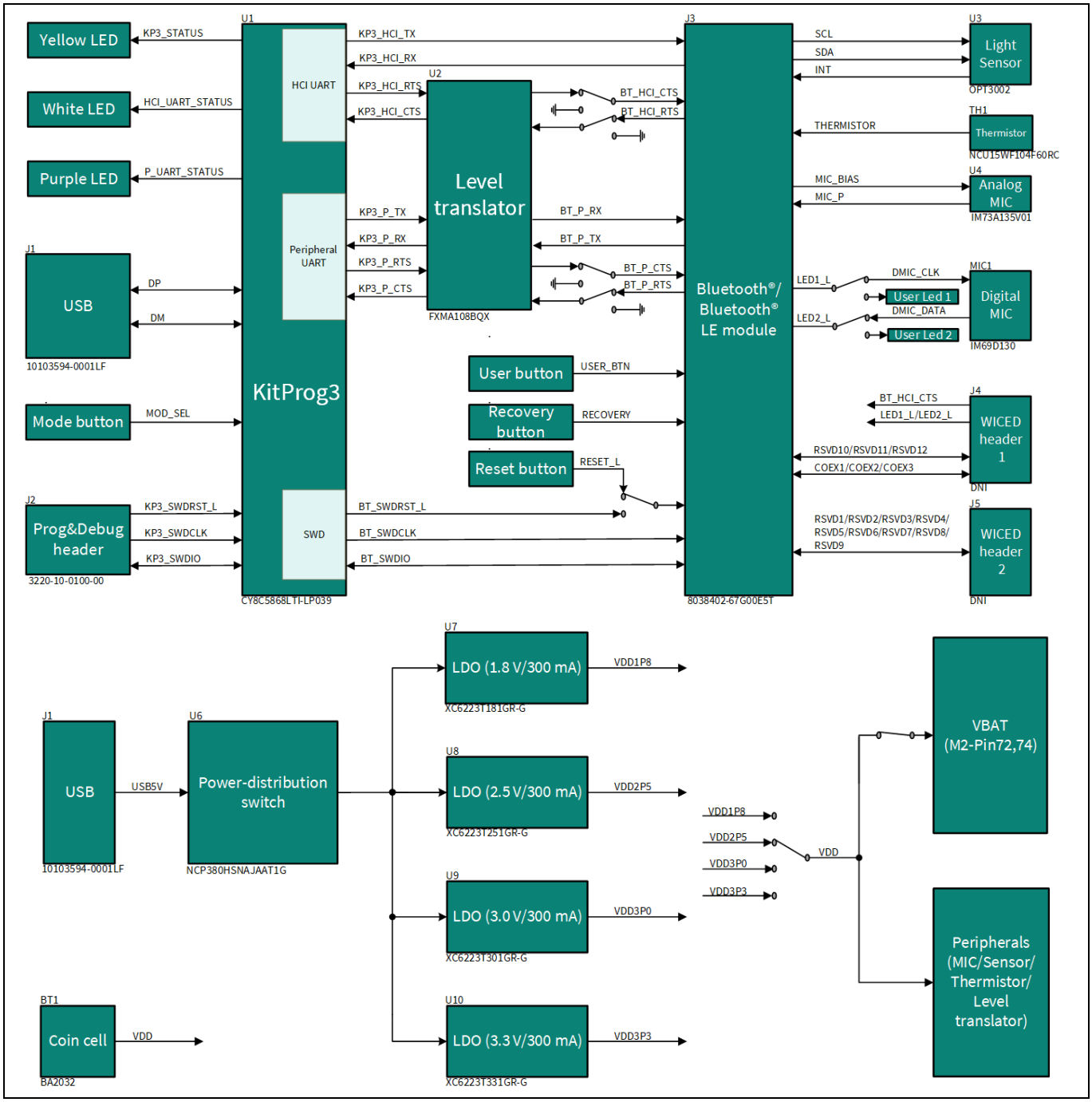

Figure 6 Block diagram of CYW30739B2-P5-EVK01 baseboard

Figure 7 shows the makeup of the CYW30739B2-P5-EVK01 with the list below for a description of the numbered items.

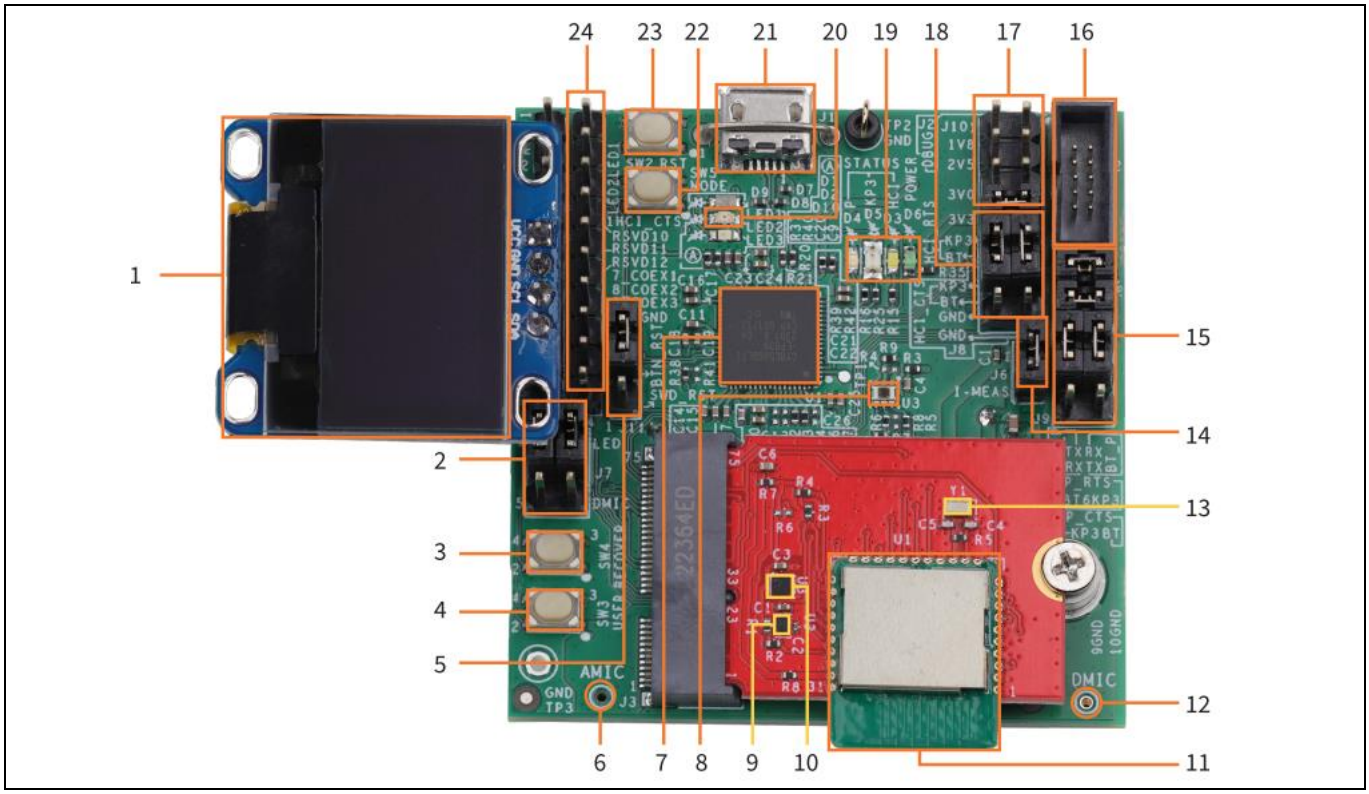

Figure 7 CYW30739B2-P5-EVK01

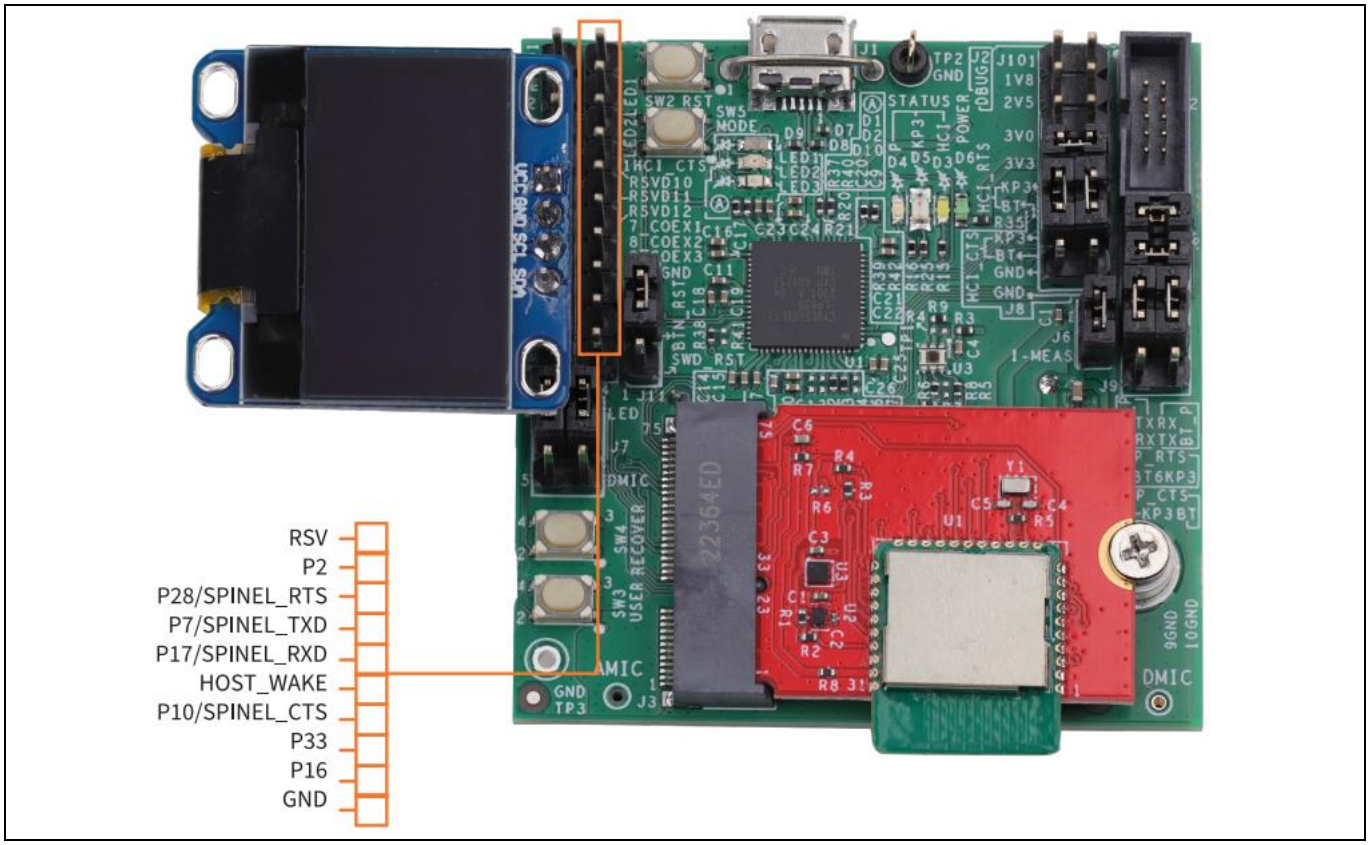

Figure 8 CYW30739B2-P5-EVK01 pinout

1. **OLED display (J5-6-9)**: It is used to show the data, temperature, and humidity in the Matter applications.
2. **LED/MIC selection (J7)**: Use jumpers to choose between the DMIC and LEDs.
3. **Recover button (SW4)**: It is connected to the HCI_CTS pin of CYW30739, working as a recover input. It works with 'reset' to assist firmware flashing.
4. **User button (SW3)**: This button can be used to provide input to the CYW30739 device. Note that the button connects the CYW30739 pin to the ground when pressed; therefore, the CYW30739 pin must be configured as a digital input with a resistive pull-up for detecting the button press.
5. **Reset selection (J11)**: Use a jumper to choose the reset source between the reset button and SWD reset.
6. **Analog MIC(MIC1)**: The IM73A135V01 is an IP57 dust and water resistant analog XENSIV™ MEMS microphone.
7. **KitProg3 (U1)**: The PSoC™ 5LP (CY8C5868LTI-LP039) serving as KitProg3, is a multi-functional system, that includes a Serial Wire Debug (SWD) programmer, debugger, and two USB-to-UART bridges. For more details, see the KitProg3 user guide.
8. **Light sensor (U3)**: The OPT3002 light-to-digital sensor provides the functionality of an optical power meter within a single device.
9. **Voltage detector (U2)**: The XC6119N16A7R-G is a voltage detector with delay time adjustable. It is used to generate the reset signal to the CYW30739 device.
10. **Temperature/humidity sensor (U3)**: The HDC2010 is an integrated humidity and temperature sensor that provides high accuracy measurements with very low power consumption.
11. **CYW30739B2-P5TAI051 (U1)**: It is the AIROC™ CYW30739 Matter/Thread/IEEE 802.15.4 + Bluetooth® Low Energy module.
12. **Digtal MIC (U5)**: The IM69D130 is a high-performance digital XENSIV ™ MEMS microphone.
13. **32.768 KHz XTAL (Y1)**: It works as an external LPO. There are two internal low-power oscillators (LPOs) called the 'LP-LPO' and 'HP-LPO' and an external crystal (OSC32K). The firmware determines the clock source to use among the available LPOs depending on the accuracy and power requirements. The preferred source is the external LPO (OSC32K) because it has good accuracy with the lowest current consumption. Internal LP-LPO has low current consumption and low accuracy, whereas HP-LPO has higher accuracy and higher current consumption.
14. **Current measurement (J6)**: This jumper is used to power the carrier module. Remove this jumper and connect a digital multimeter to the two pins to measure the current the carrier module uses.
15. **Debug UART(J9)**: It is used as log output for CYW30739. By removing the jumpers, it can also be used as a USB to UART bridge.
16. **KP3 Prog header (J2)**: It is a 10-pin interface header that can be used to connect an external programmer/debugger via SWD.
17. **Power selection (J10)**: This jumper is used to select the VDD (power module) power source. The possible selections are 3.3 V, 3.0 V, 2.5 V, 1.8 V. If the user powers the module with a coin cell, remove the jumper on J10.
18. **HCI flow control (J8)**: It offers an option to pull HCI_RTS and HCI_CTS to GND in case of communication without flow control.
19. **Power LED (D6)**: This LED is used to indicate the status of power supplied to the board.
    HCI UART LED (D3): This LED is used to indicate the status of the HCI UART.
    KP3 LED(D5): This LED is used to indicate the status of the KitProg3.
    Debug LED (D4): This LED is used to indicate the status of the debug UART.
20. **User LED (D2)**: This LED can be controlled by the CYW30739 device (GPIO: P28). The LED is active LOW.
21. **USB (J1)**: It is a Micro-B USB female connector for connecting the kit to the PC using the provided USB cable. It is used for programming and USB-UART communication.

22. **Mode button (SW5)**: This button is used to switch the modes of KitProg3. For more details, see the KitProg3 user guide.
23. **Reset button (SW2)**: This button can be used to reset the CYW30739B2-P5TAI051 module.
24. **Header**: Expansion header for IO and SPINEL UART, as shown in Figure 8.

2.2 Buttons

Table 2 Button functionality

Buttons	Pressed state	Description
SW2	GND	Active LOW reset button
SW3	GND	User button to connect to P4 of CYW30739
SW4	GND	Recover button of CYW30939
SW5	GND	Mode button to select KitProg3 mode

2.3 Jumpers

Table 3 to Table 8 list the jumper settings on the CYW30739B2-P5-EVK01.

Table 3 Jumper J6 pin configurations

Jumper J6 (current measurement)	Default state	Description
1 and 2	Shorted	Short these pins to supply power to the module carrier board. Place a multimeter across the pins for current measurement.

Table 4 Jumper J7 pin configurations

Jumper J7 (LED/MIC Selection)	Default state	Description
1 and 3	Shorted	Short these pins to use the LED D1
3 and 5	Open	Short these pins to use the DMIC
2 and 4	Shorted	Short these pins to use the LED D2
4 and 6	Open	Short these pins to use the DMIC

Table 5 Jumper J8 pin configurations

Jumper J8 (HCI flow control)	Default state	Description
1 and 3	Shorted	Short these pins to support flow control of HCI UART
3 and 5	Open	Short these pins to pull HCI_CTS to GND on host's side
2 and 4	Shorted	Short these pins to support flow control of HCI UART
4 and 6	Open	Short these pins to pull HCI_CTS to GND on module's side

Table 6 Jumper J9 pin configurations

Jumper J9 (Debug UART)	Default state	Description
1 and 2	Shorted	Short these pins to use RXD
3 and 4	Shorted	Short these pins to use TXD
5 and 7	Shorted	Short these pins to use RTS
7 and 9	Open	Short these pins to pull CTS to GND on host's side
6 and 8	Shorted	Short these pins to use CTS
8 and 10	Open	Short these pins to pull HCI_CTS to GND on module's side

Table 7 Jumper J10 pin configurations

Jumper J10 (Power selection)	Default state	Description
1 and 2	Open	Short these pins to supply 1.8 V to module and peripherals
3 and 4	Open	Short these pins to supply 2.5 V to module and peripherals
5 and 6	Open	Short these pins to supply 3.0 V to module and peripherals
7 and 8	Shorted	Short these pins to supply 3.3 V to module and peripherals

Table 8 Jumper J11 pin configurations

Jumper J11 (Reset selection)	Default state	Description
1 and 2	Open	Short these pins to choose reset resource from SWD reset
2 and 3	Shorted	Short these pins to choose reset resource from reset button

2.4 USB to UART bridge

The PSoC™ 5LP-based KitProg3 is used for onboard programming and USB-Serial functionality. It connects to the PC over a USB interface and to the CYW30739 through the HCI UART and Debug UART pins.

2.5 Kit power supply

Power the module with one of the two power sources – USB or coin-cell battery.

If a USB is used, remove the coin-cell from the kit and refer to Table 7 to place a jumper on J10 to select 1.8 V, 2.5 V, 3.0 V, or 3.3 V. Figure 6 shows the USB power connected to four LDO regulators with 1.8 V, 2.5 V, 3.0 V, and 3.3 V respectively.

If a coin-cell battery is used, remove the jumper on J10.

3 Hardware

The following sections describe the CYW30739B2-P5_EVK01 hardware, which includes the carrier module (CYW930739MD1M2ADP), the baseboard (CYW9BTMDM2BASE1), and the OLED display (HTDS-BI96F).

3.1 Carrier module

The carrier module, CYW930739MD1M2ADP, has the CYW30739B2-P5TAI051 module as its central part. It is assembled onto the baseboard through the M.2 interface. See CYW30739 device I/O mapping section for a detailed interface description.

3.1.1 Antenna

A PCB antenna is etched on the CYW30739B2-P5TAI051 module. This antenna is matched to 50 Ω when the CYW30739B2-P5_EVK01 is placed on a table.

The following table lists the S11 measurement. See AN91445 – Antenna design and RF layout guidelines for additional information.

Table 9 Antenna S11 measurement

2400 MHz	2440 MHz	2480 MHz
–8.1 dB	–27.9 dB	–7.5 dB

3.1.2 Crystal

The carrier module has two crystals onboard. A 24-MHz crystal (XTAL) is the main crystal, which is embedded in CYW30739B2-P5TAI051. This XTAL must have an accuracy of ± 20 ppm as defined by the Bluetooth® specification. A 32.768-kHz crystal provides accurate timing during low-power operation.

3.1.3 Temperature and humidity sensor

An onboard sensor, TI HDC2010YPAR, is available to the user to measure the temperature and humidity of the kit. CYW30739 communicates with the sensor over I²C. Its I²C slave address is 0x40. The DRDY/INT is a push-pull output, and does not need a pullup resistor.

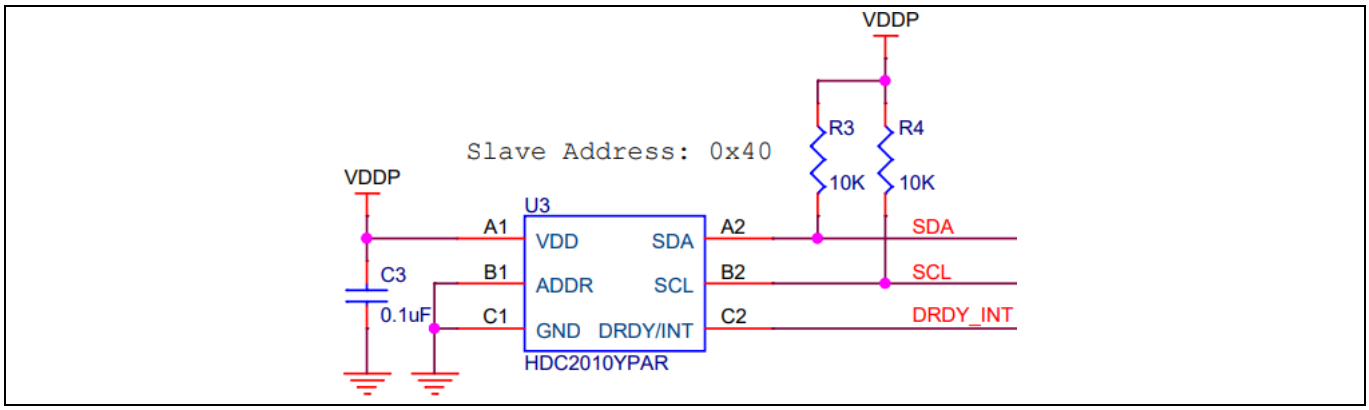

Figure 9 Temperature and humidity sensor

3.2 Baseboard

CYW9BTMDM2BASE1 is a general baseboard, which can work with various carrier modules through the M.2 interface.

3.2.1 Reset

The reset source can be chosen from the reset button of the SWD Reset.

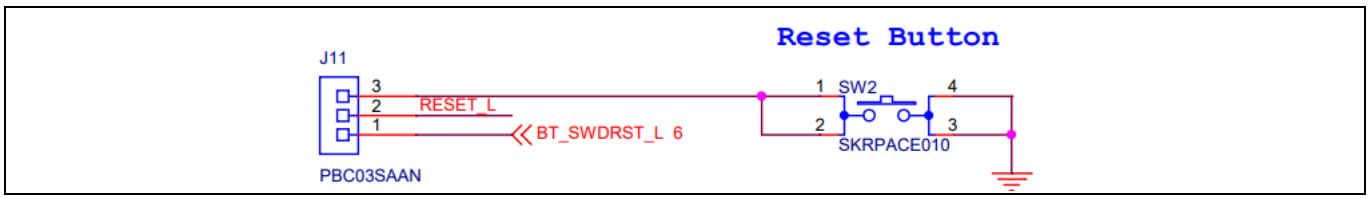

Figure 10 Reset button circuit in baseboard

The voltage detector, TOREX XC6119N16A7R-G, is used to provide adjustable reset delay after external reset is released. The delay time can be briefly calculated with the formula ($t_{DR} = R_{DELAY} \times C_d \times 0.69$, where $R_{DELAY} = 2.0$ MΩ).

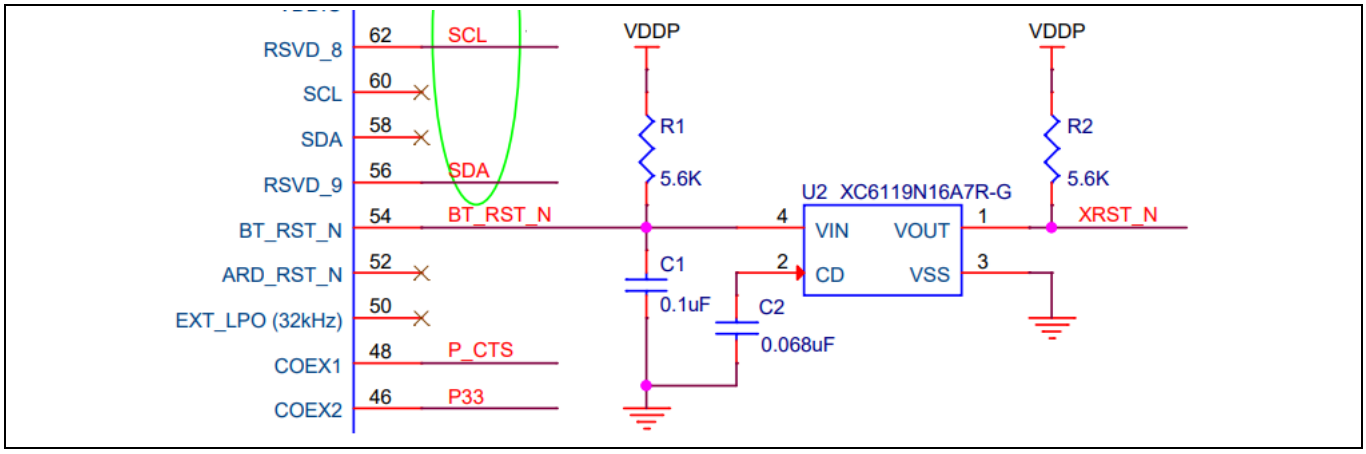

Figure 11 Voltage detector circuit in the carrier module

3.2.2 Power

The power supply system on this board is versatile, allowing the input supply to come from the following sources:

- 5 V from KitProg3 Micro USB Type-B port
- 3 V from coin-cell

U6 (ONSEMI NCP380HSNAJAAT1G) is used to limit the current to 500 mA with the resistor, R32 (44.2 KΩ).

The four LDOs (TOREX XC6223 Series, U7/U8/U9/U10) generate 1.8 V/2.5 V/3.0 V/3.3 V with maximum output current of 300 mA. See Table 7 to place a jumper on J10 to choose the expected power.

A coin-cell battery can be placed in BT1 to supply power to module directly with no jumper on J10.

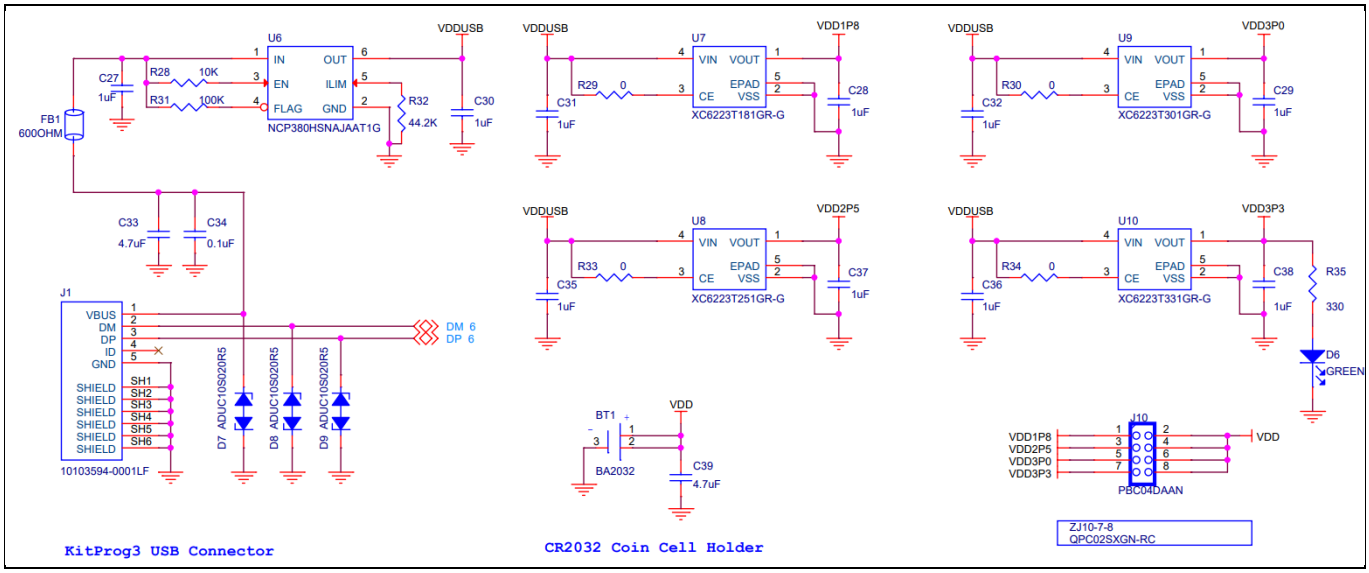

Figure 12 Power supply

3.2.3 KitProg3

The KitProg3 is implemented with the onboard CY8C5868LTI-LP039 PSoC™ 5LP device, to realize the two USB to UART bridges. One is HCI UART, the other (P_UART) is for Debug UART. Since PSoC™ 5LP features 5 V logic, U2 (ONSEMI FXMA108BQX) is used as a level translator to adapt for different levels at the module's side. Specially, KP3_HCI_TX and KP3_HCI_RX can adapt different levels automatically, therefore, do not need additional level translation.

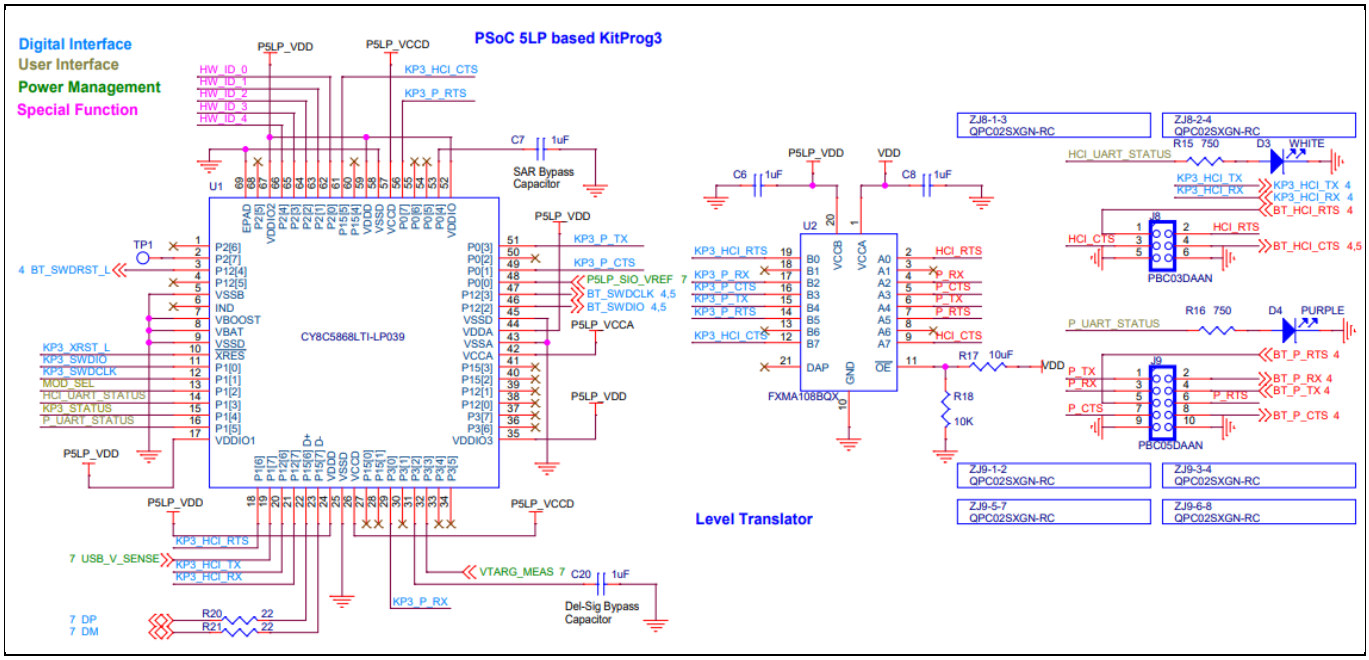

Figure 13 KitProg3 circuit

3.2.4 Analog MIC

An analog MEMS microphone (Infineon IM73A135V01) is provided on the baseboard for analog audio application. This AMIC is powered by the MIC_BIAS rail from the module's side.

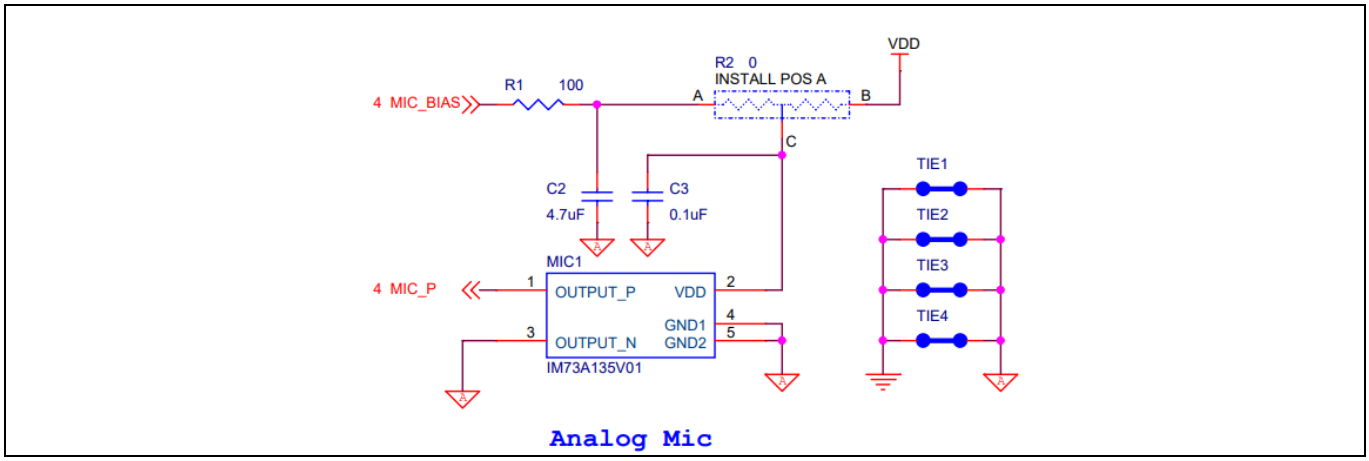

Figure 14 AMIC circuit

3.2.5 Digital MIC

A digital MEMS microphone (Infineon IM69D130) is provided on the baseboard and interfaces with module through the dedicated PDM interface.

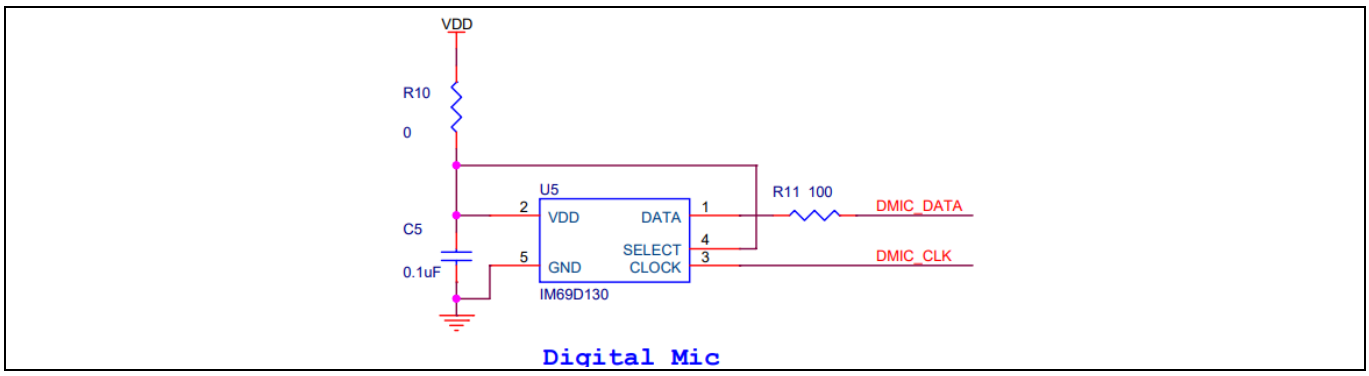

Figure 15 DMIC circuit

3.2.6 Ambient light sensor

A light-to-digital sensor (TI OPT3002) provides the kit with the functionality of an optical power meter. It interfaces with module through the I2C bus.

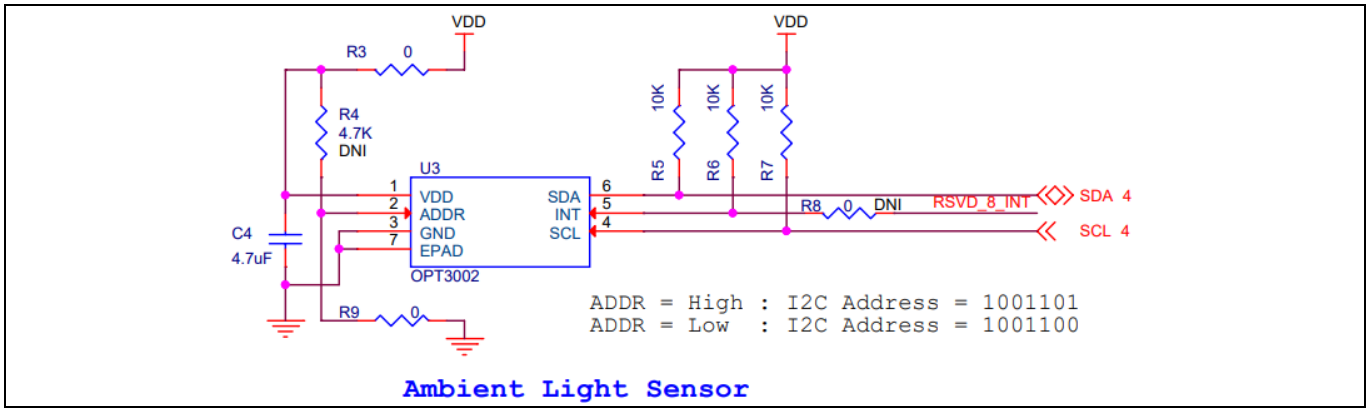

Figure 16 Ambient light sensor circuit

3.2.7 Thermistor

The thermistor circuit is a simple voltage divider circuit consisting of a thermistor (Murata NCU15WF104F60RC) that is 100 kΩ at 25°C, and a fixed 100 kΩ resistor.

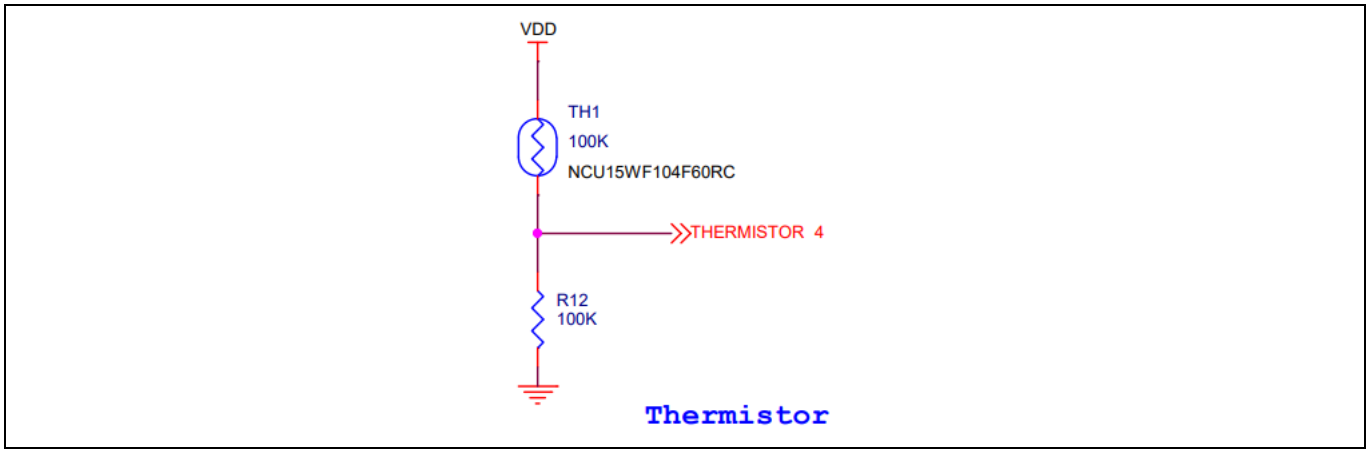

Figure 17 Thermistor circuit

3.3 OLED Display

The OLED display, HELTEC HTDS-BI96F, is used to display the time, temperature, and humidity for Matter applications. It is a 0.96-inch, blue version, I2C OLED display with a four-pin female header. It is placed on J5-6-9 on the baseboard. CYW30739 communicates with the OLED display over I2C, with the slave address, 0x3C.

Table 10 OLED interface

OLED	Baseboard	Description
VCC	J5.6	Power supply
GND	J5.7	Ground
SCL	J5.8	I2C clock line
SDA	J5.9	I2C data line

4 CYW30739 device I/O mapping

The following table maps the CYW30739 device I/Os to connections on the baseboard.

Table 11 M.2 interface and I/O mapping

M.2 pin	Pin name	CYW30739 connection	Baseboard connection	Note
1	GND	GND	GND	
2	LED3_N	NC	LED3_L	
3	USB_DP	NC	NC	
4	VPA	NC	NC	
5	USB_DN	NC	NC	
6	LED1_N	P2	LED1_L_DMIC_CLK	J7.3
7	GND	GND	GND	
8	A4	NC	NC	
9	D13	NC	NC	
10	A5	NC	NC	
11	D8	NC	NC	
12	D6	NC	NC	
13	D12	NC	NC	
14	D7	NC	NC	
15	D11	NC	NC	
16	LED2_N	P28 (P_RTS_LED)	LED2_L_DMIC_DATA	J7.4
17	A0	NC	THERMISTOR	
18	GND	GND	GND	
19	A1	NC	NC	
20	RSVD_12	HOST_WAKE	RSVD_12	J4.6
21	D10	NC	NC	
22	BT_UART_TXD	HCI_TXD	KP3_HCI_RX	U1.21
23	D2	NC	NC	
32	BT_UART_RXD	HCI_RXD	KP3_HCI_TX	U1.20
33	RSVD_10	P7 (P_TXD)	RSVD_10	J4.4
34	BT_UART_RTS	HCI_RTS	BT_HCI_RTS	J8.1
35	D4	NC	NC	
36	BT_UART_CTS	HCI_CTS	BT_HCI_CTS	J4.1, J8.4
37	D5	NC	NC	
38	D3	NC	NC	
39	GND	GND	GND	
40	D9	NC	NC	
41	RSVD_4	NC	BT_SWDCLK	U1.47, J5.4
42	RSVD_11	P17 (P_RXD)	RSVD_11	J4.5

CYW30739 device I/O mapping

M.2 pin	Pin name	CYW30739 connection	Baseboard connection	Note
43	RSVD_3	NC	BT_SWDIO	U1.46,J5.3
44	COEX3	P16	COEX3	J4.9
45	GND	GND	GND	
46	COEX2	P33	COEX2	J4.8
47	MICP	NC	MIC_P	MIC1.1
48	COEX1	P10 (P_CTS)	COEX1	J4.7
49	MICN	NC	GND	
50	EXT_LPO	NC	NC	
51	GND	GND	GND	
52	ARD_RST_N	NC	NC	
53	MIC_BIAS	NC	MIC_BIAS	MIC1.2
54	BT_RST_N	BT_RST_N	RESET_L	J11.2
55	MIC_AVDD	NC	NC	
56	RSVD_9	P25 (SDA)	RSVD_9	J5.9 (OLED SDA)
57	GND	GND	GND	
58	SDA	NC	SDA	U3.6
59	RSVD_2	NC	RSVD_2	J5.2
60	SCL	NC	SCL	U3.4
61	RSVD_1	P4 (BTN)	RSVD_1_USER_BTN	SW3.1, J5.1
62	RSVD_8	P26 (SCL)	RSVD_8_INT	U3.5, J8.8(OLED SCL)
63	RECOVERY	HCI_CTS	RECOVERY	SW4.1
64	VDDIO	NC	NC	
65	A3	NC	BT_P_RTS	J9.5
66	RSVD_7	GND	RSVD_7	J5.7(OLED GND)
67	A2	NC	BT_P_CTS	
68	RSVD_6	VDDP	RSVD_6	J5.6(OLED VCC)
69	GND	GND	GND	J9.8
70	RSVD_5	NC	RSVD_5	J5.5
71	D1	P6 (DEBUG_TXD)	BT_P_TX	J9.4
72	VBAT	VDD	VDD	
73	D0	NC	BT_P_RX	J9.2
74	VBAT	VDD	VDD	
75	GND	GND	GND	

References

[1] Code examples: Infineon GitHub repository

Glossary

API

application programming interface

EVK

evaluation kit

GPIO

general purpose input/output

HCI

host controller interface

I2C

inter-integrated circuit

IDE

integrated development environment

JTAG

Joint Test Action Group

LE

Low Energy

LED

light emitting diode

LPO

low-power oscillator

MEMS

micro electro-mechanical system

NTC

negative temperature coefficient

PCB

printed circuit board

SPI

Serial Peripheral Interface

SWD

Serial Wire Debug

Glossary

UART

Universal Asynchronous Receiver/Transmitter

USB

Universal Serial Bus

XTAL

crystal oscillator

Revision history

Document revision	Date	Description of changes
**	2024-09-06	Initial release

Trademarks
All referenced product or service names and trademarks are the property of their respective owners.
The Bluetooth® word mark and logos are registered trademarks owned by Bluetooth SIG, Inc., and any use of such marks by Infineon is under license.

Edition 2024-09-06

Published by

Infineon Technologies AG

81726 Munich, Germany

© 2024 Infineon Technologies AG. All Rights Reserved.

Do you have a question about this document?

Email: erratum@infineon.com

Document reference

002-40362 Rev. **

Warnings
Due to technical requirements products may contain dangerous substances. For information on the types in question please contact your nearest Infineon Technologies office.

Except as otherwise explicitly approved by Infineon Technologies in a written document signed by authorized representatives of Infineon Technologies, Infineon Technologies' products may not be used in any applications where a failure of the product or any consequences of the use thereof can reasonably be expected to result in personal injury.