●About difference between MB2100-01A-E and MB2100-01-E

About difference between MB2100-01A-E and MB2100-01-E is shown below.

[Differences between MB2100-01A-E and MB2100-01-E]

- It changed the company name logo from "FUJITSU" to "SPANSION".
- It changed the model number from "MB2100-01-E" to "MB2100-01A-E".
- It changed the company name written in the bottom of the case from "FUJITSU SEMICONDUCTOR LIMITED" to " Spansion Inc.".
- It added a clamp filter to a MDI cable and a USB cable.
- It listed "CE"marking in the bottom of the case.

It shows below the cases of MB2100-01A-E on Fig.1 and MB2100-01-E on Fig.2.

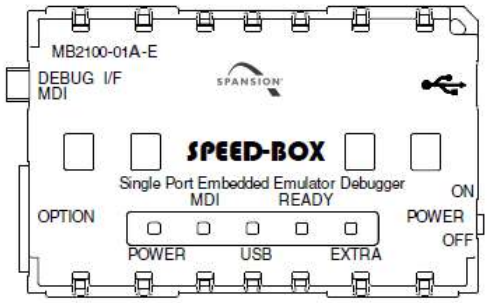

Fig.1 The case of MB2100-01A-E

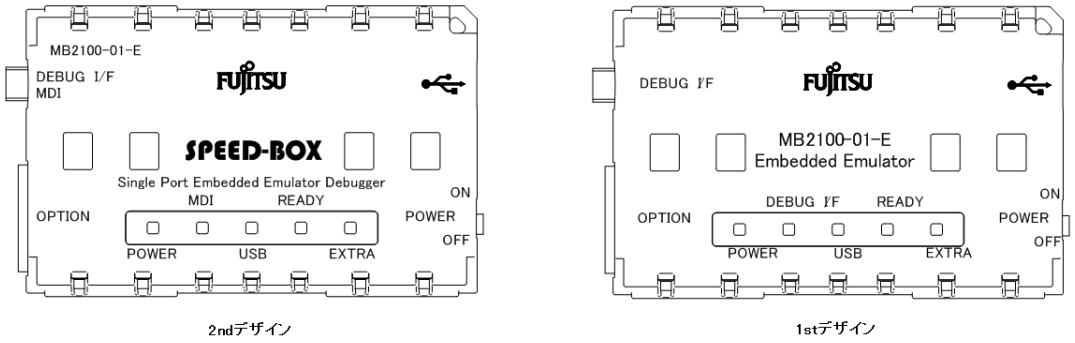

Fig.2 The cases of MB2100-01-E (l to r: ver.2 to ver.1)

8.April,2014

Copyright© 2010-2014 Spansion Inc. All rights reserved.