Please note that Cypress is an Infineon Technologies Company.
The document following this cover page is marked as “Cypress” document as this is the company that originally developed the product. Please note that Infineon will continue to offer the product to new and existing customers as part of the Infineon product portfolio.

Continuity of document content
The fact that Infineon offers the following product as part of the Infineon product portfolio does not lead to any changes to this document. Future revisions will occur when appropriate, and any changes will be set out on the document history page.

Continuity of ordering part numbers
Infineon continues to support existing part numbers. Please continue to use the ordering part numbers listed in the datasheet for ordering.



32-Bit Microcontroller FM4 Family Peripheral Manual Analog Macro Part

Doc. No. 002-04860 Rev.*C

Cypress Semiconductor
198 Champion Court
San Jose, CA 95134-1709
www.cypress.com

Copyrights

© Cypress Semiconductor Corporation, 2013-2018. This document is the property of Cypress Semiconductor Corporation and its subsidiaries, including Spansion LLC (“Cypress”). This document, including any software or firmware included or referenced in this document (“Software”), is owned by Cypress under the intellectual property laws and treaties of the United States and other countries worldwide. Cypress reserves all rights under such laws and treaties and does not, except as specifically stated in this paragraph, grant any license under its patents, copyrights, trademarks, or other intellectual property rights. If the Software is not accompanied by a license agreement and you do not otherwise have a written agreement with Cypress governing the use of the Software, then Cypress hereby grants you a personal, non-exclusive, nontransferable license (without the right to sublicense) (1) under its copyright rights in the Software (a) for Software provided in source code form, to modify and reproduce the Software solely for use with Cypress hardware products, only internally within your organization, and (b) to distribute the Software in binary code form externally to end users (either directly or indirectly through resellers and distributors), solely for use on Cypress hardware product units, and (2) under those claims of Cypress’s patents that are infringed by the Software (as provided by Cypress, unmodified) to make, use, distribute, and import the Software solely for use with Cypress hardware products. Any other use, reproduction, modification, translation, or compilation of the Software is prohibited.

TO THE EXTENT PERMITTED BY APPLICABLE LAW, CYPRESS MAKES NO WARRANTY OF ANY KIND, EXPRESS OR IMPLIED, WITH REGARD TO THIS DOCUMENT OR ANY SOFTWARE OR ACCOMPANYING HARDWARE, INCLUDING, BUT NOT LIMITED TO, THE IMPLIED WARRANTIES OF MERCHANTABILITY AND FITNESS FOR A PARTICULAR PURPOSE. No computing device can be absolutely secure. Therefore, despite security measures implemented in Cypress hardware or software products, Cypress does not assume any liability arising out of any security breach, such as unauthorized access to or use of a Cypress product. In addition, the products described in these materials may contain design defects or errors known as errata which may cause the product to deviate from published specifications. To the extent permitted by applicable law, Cypress reserves the right to make changes to this document without further notice. Cypress does not assume any liability arising out of the application or use of any product or circuit described in this document. Any information provided in this document, including any sample design information or programming code, is provided only for reference purposes. It is the responsibility of the user of this document to properly design, program, and test the functionality and safety of any application made of this information and any resulting product. Cypress products are not designed, intended, or authorized for use as critical components in systems designed or intended for the operation of weapons, weapons systems, nuclear installations, life-support devices or systems, other medical devices or systems (including resuscitation equipment and surgical implants), pollution control or hazardous substances management, or other uses where the failure of the device or system could cause personal injury, death, or property damage (“Unintended Uses”). A critical component is any component of a device or system whose failure to perform can be reasonably expected to cause the failure of the device or system, or to affect its safety or effectiveness. Cypress is not liable, in whole or in part, and you shall and hereby do release Cypress from any claim, damage, or other liability arising from or related to all Unintended Uses of Cypress products. You shall indemnify and hold Cypress harmless from and against all claims, costs, damages, and other liabilities, including claims for personal injury or death, arising from or related to any Unintended Uses of Cypress products.

Cypress, the Cypress logo, Spansion, the Spansion logo, and combinations thereof, WICED, PSoC, CapSense, EZ-USB, F-RAM, and Traveo are trademarks or registered trademarks of Cypress in the United States and other countries. For a more complete list of Cypress trademarks, visit cypress.com. Other names and brands may be claimed as property of their respective owners.

Arm and Cortex are registered trademarks of Arm Limited (or its subsidiaries) in the US and/or elsewhere.

Preface

Thank you for your continued use of Cypress products.
Read this manual and the data sheet thoroughly before using products in this family.

Purpose of This Manual / Intended Readers

This manual explains the functions and operations of this family and describes how they are used. The manual is intended for engineers engaged in the actual development of products using this family.
For the descriptions of the Analog macro, Timer, and Communication Macro, see the respective separate peripheral manuals.

Note:

- *This manual explains the configuration and operation of the peripheral functions, but does not cover the specifics of each device in the series.*
  Users should refer to the respective data sheets of devices for device-specific details.
- *Whether a peripheral function is on board or not is dependent on product type. See data sheets for details.*

Sample Programs and Development Environment

Cypress offers sample programs free of charge for using the peripheral functions of the FM4 family. Cypress also makes available descriptions of the development environment required for this family. Feel free to use them to verify the operational specifications and usage of this Cypress microcontroller.

Microcontroller Support Information:

https://community.cypress.com/community/MCU

Note:

- *Note that the sample programs are subject to change without notice. Since they are offered as a way to demonstrate standard operations and usage, evaluate them sufficiently before running them on your system.*
  Cypress assumes no responsibility for any damage that may occur as a result of using a sample program.

Overall Organization of This Manual

Peripheral Manual Analog macro part has 2 chapters and Appendixes as shown below.

CHAPTER 1-1: A/D Converter
CHAPTER 1-2: 12-bit A/D Converter
CHAPTER 1-3: A/D Timer Trigger Selection
CHAPTER 2: 12-bit D/A Converter
Appendixes

Related Manuals

The manuals related to this family are listed below. See the manual appropriate to the applicable conditions.

The contents of these manuals are subject to change without notice. Contact us to check the latest versions available.

Peripheral Manual

■ FM4 Family Peripheral Manual (002-04856)
Called Peripheral Manual hereafter

■ FM4 Family Peripheral Manual Timer Part (002-04858)
Called Timer Part hereafter

■ FM4 Family Peripheral Manual Analog Macro Part (this manual)
Called Analog Macro Part hereafter

■ FM4 Family Peripheral Manual Communication Macro Part (002-04862)
Called Communication Macro Part hereafter

■ FM4 Family Peripheral Manual GDC Part (002-04917)
Called GDC Part hereafter

Data Sheet

For details about device-specific, electrical characteristics, package dimensions, ordering information etc., see the following document.

■ 32-bit Microcontroller FM4 Family Data Sheet

Note:

- *The data sheets for each series are provided.*
  See the appropriate data sheet for the series that you are using.

CPU Programming Manual

For details about Arm Cortex-M4F core, see the following documents that can be obtained from http://www.arm.com/.

■ Cortex-M4 Technical Reference Manual
■ Arm v7-M Architecture Application Level Reference Manual

Flash Programming Manual

For details about the functions and operations of the built-in flash memory, see the following document.

■ FM4 Family Flash Programming Manual

Note:

- *Flash programming manuals for each series are provided.*
  See the appropriate flash programming manual for the series that you are using.

How to Use This Manual

Finding a Function

The following methods can be used to search for the explanation of a desired function in this manual:

■ Search from the table of the contents

The table of the contents lists the manual contents in the order of description.

■ Search from the register

The address where each register is located is not described in the text. To verify the address of a register, see A. Register Map in Appendixes.

About the Chapters

Basically, this manual explains 1 peripheral function per chapter.

Terminology

This manual uses the following terminology.

Term	Explanation
Word	Indicates access in units of 32 bits.
Half word	Indicates access in units of 16 bits.
Byte	Indicates access in units of 8 bits.

Notations

■ The notations in bit configuration of the register explanation of this manual are written as follows.

- bit: bit number
- Field: bit field name
- Attribute: Attributes for read and write of each bit
  - R: Read only
  - W: Write only
  - R/W: Readable/Writable
  - -: Undefined
- Initial value: Initial value of the register after reset
  - 0: Initial value is 0
  - 1: Initial value is 1
  - X: Initial value is undefined

■ The multiple bits are written as follows in this manual.

- Example : bit7:0 indicates the bits from bit7 to bit0

■ The values such as for addresses are written as follows in this manual.

- Hexadecimal number: 0x is attached in the beginning of a value as a prefix (example : 0xFFFF)
- Binary number: 0b is attached in the beginning of a value as a prefix (example: 0b1111)
- Decimal number : Written using numbers only (example: 1000)

The Target Products in This Manual

- In this manual, the products are classified into the following groups and are described follows.
  For the descriptions such as "TYPE1-M4", see the relevant items of the target product in the list below.

Table 1 TYPE1-M4 Product List

Description in this manual	Flash memory size		
	1024 Kbytes	768 Kbytes	512 Kbytes
TYPE1-M4	MB9BF568M MB9BF568N MB9BF568R MB9BF568RF CY9BF568M CY9BF568N CY9BF568R CY9BF568RF	MB9BF567M MB9BF567N MB9BF567R CY9BF567M CY9BF567N CY9BF567R	MB9BF566M MB9BF566N MB9BF566R CY9BF566M CY9BF566N CY9BF566R
	MB9BF468M MB9BF468N MB9BF468R CY9BF468M CY9BF468N CY9BF468R	MB9BF467M MB9BF467N MB9BF467R CY9BF467M CY9BF467N CY9BF467R	MB9BF466M MB9BF466N MB9BF466R CY9BF466M CY9BF466N CY9BF466R
	MB9BF368M MB9BF368N MB9BF368R CY9BF368M CY9BF368N CY9BF368R	MB9BF367M MB9BF367N MB9BF367R CY9BF367M CY9BF367N CY9BF367R	MB9BF366M MB9BF366N MB9BF366R CY9BF366M CY9BF366N CY9BF366R
	MB9BF168M MB9BF168N MB9BF168R CY9BF168M CY9BF168N CY9BF168R	MB9BF167M MB9BF167N MB9BF167R CY9BF167M CY9BF167N CY9BF167R	MB9BF166M MB9BF166N MB9BF166R CY9BF166M CY9BF166N CY9BF166R

Table 2 TYPE2-M4 Product List

Description in this manual	Flash memory size		
	512 Kbytes	384 Kbytes	256 Kbytes
TYPE2-M4	MB9BF566K MB9BF566L CY9BF566K CY9BF566L	MB9BF565K MB9BF565L CY9BF565K CY9BF565L	MB9BF564K MB9BF564L CY9BF564K CY9BF564L
	MB9BF466K MB9BF466L CY9BF466K CY9BF466L	MB9BF465K MB9BF465L CY9BF465K CY9BF465L	MB9BF464K MB9BF464L CY9BF464K CY9BF464L
	MB9BF366K MB9BF366L CY9BF366K CY9BF366L	MB9BF365K MB9BF365L CY9BF365K CY9BF365L	MB9BF364K MB9BF364L CY9BF364K CY9BF364L
	MB9BF166K MB9BF166L CY9BF166K CY9BF166L	MB9BF165K MB9BF165L CY9BF165K CY9BF165L	MB9BF164K MB9BF164L CY9BF164K CY9BF164L

Table 3 TYPE3-M4 Product List

Description in this manual	Flash memory size			No-Flash
	2 Mbytes	1.5 Mbytes	1 Mbytes	SRAM size 256 Kbytes
TYPE3-M4	S6E2CCAL S6E2CCAJ S6E2CCAH	S6E2CC9L S6E2CC9J S6E2CC9H	S6E2CC8L S6E2CC8J S6E2CC8H	-
	S6E2C5AL S6E2C5AJ S6E2C5AH	S6E2C59L S6E2C59J S6E2C59H	S6E2C58L S6E2C58J S6E2C58H	-
	S6E2C4AL S6E2C4AJ S6E2C4AH	S6E2C49L S6E2C49J S6E2C49H	S6E2C48L S6E2C48J S6E2C48H	-
	S6E2C3AL S6E2C3AJ S6E2C3AH	S6E2C39L S6E2C39J S6E2C39H	S6E2C38L S6E2C38J S6E2C38H	-
	S6E2C2AL S6E2C2AJ S6E2C2AJH	S6E2C29L S6E2C29J S6E2C29H	S6E2C28L S6E2C28J S6E2C28JH	-
	S6E2C1AL S6E2C1AJ S6E2C1AH	S6E2C19L S6E2C19J S6E2C19H	S6E2C18L S6E2C18J S6E2C18H	S6E2C10L S6E2C10J S6E2C10H

Table 4 TYPE4-M4 Product List

Description in this manual	Flash memory size 384 Kbytes	
	VRAM 512 Kbytes	VRAM 512 Kbytes + VFLASH 2 Mbytes
TYPE4-M4	S6E2D35G0 S6E2D35J0	S6E2D35GJ
	S6E2D55G0 S6E2D55J0	S6E2D55GJ
	S6E2DF5G0 S6E2DF5J0	S6E2DF5GJ
	S6E2DH5G0 S6E2DH5J0	S6E2DH5GJ

Table 5 TYPE5-M4 Product List

Description in this manual	Flash memory size	
	1 Mbytes	512 Kbytes
TYPE5-M4	S6E2GM8J S6E2GM8H	S6E2GM6J S6E2GM6H
	S6E2GK8J S6E2GK8H	S6E2GK6J S6E2GK6H
	S6E2GH8J S6E2GH8H	S6E2GH6J S6E2GH6H
	S6E2G28J S6E2G28H	S6E2G26J S6E2G26H
	S6E2G38J S6E2G38H	S6E2G36J S6E2G36H

Table 6 TYPE6-M4 Product List

Description in this manual	Flash memory size	
	512 Kbytes	256 Kbytes
TYPE6-M4	S6E2HG6G S6E2HG6F S6E2HG6E	S6E2HG4G S6E2HG4F S6E2HG4E
	S6E2HE6G S6E2HE6F S6E2HE6E	S6E2HE4G S6E2HE4F S6E2HE4E
	S6E2H46G S6E2H46F S6E2H46E	S6E2H44G S6E2H44F S6E2H44E
	S6E2H16G S6E2H16F S6E2H16E	S6E2H14G S6E2H14F S6E2H14E

Contents

CHAPTER 1-1: A/D Converter 13
1. Configuration 14
2. Functions and Operations 16
3. Usage Precautions 17

CHAPTER 1-2: 12-bit A/D Converter 19
1. Overview 20
2. Configuration 21
3. Explanation of Operations 22
   - 3.1 Enabling Operations of the A/D Converter 23
   - 3.2 A/D Conversion Operation 24
     - 3.2.1 Scan Conversion Operation 25
     - 3.2.2 Priority Conversion Operation 27
     - 3.2.3 Priority Levels and State Transitions 28
   - 3.3 FIFO Operations 30
     - 3.3.1 FIFO Operations in Scan Conversion 31
     - 3.3.2 Interrupts in Scan Conversion 32
     - 3.3.3 FIFO Operations in Priority Conversion 34
     - 3.3.4 Interrupts in Priority Conversion 35
     - 3.3.5 Validity of FIFO Data 36
     - 3.3.6 Bit placement Selection for FIFO Data Registers 37
   - 3.4 A/D Comparison Function 38
   - 3.5 Range Comparison Function 39
   - 3.6 Starting DMA 43
4. Setup procedure Examples 44
   - 4.1 A/D Operation Enable Setup Procedure Example 45
   - 4.2 Scan Conversion Setup Procedure Example 46
   - 4.3 Priority Conversion Setup Procedure Example 47
   - 4.4 Range Comparison Function Setting Example 48
   - 4.5 Setting Conversion Time 49
5. Registers 51
   - 5.1 A/D Control Register (ADCR) 52
   - 5.2 A/D Status Register (ADSR) 54
   - 5.3 Scan Conversion Control Register (SCCR) 56
   - 5.4 Scan Conversion FIFO Stage Count Setup Register (SFNS) 58
   - 5.5 Scan Conversion FIFO Data Register (SCFD) 59
   - 5.6 Scan Conversion Input Selection Register (SCIS) 61
   - 5.7 Priority Conversion Control Register (PCCR) 62
   - 5.8 Priority Conversion FIFO Stage Count Setup Register (PFNS) 64
   - 5.9 Priority Conversion FIFO Data Register (PCFD) 65
   - 5.10 Priority Conversion Input Selection Register (PCIS) 67

5.11 A/D Comparison Value Setup Register (CMPD) ... 68
5.12 A/D Comparison Control Register (CMPCR) ... 69
5.13 Sampling Time Selection Register (ADSS) ... 70
5.14 Sampling Time Setup Register (ADST) ... 71
5.15 Frequency Division Ratio Setup Register (ADCT) ... 73
5.16 A/D Operation Enable Setup Register (ADCEN) ... 74
5.17 Upper Limit Setup Register (WCMPDH) ... 75
5.18 Range Comparison Control Register (WCMPCR) ... 76
5.19 Lower Limit Threshold Setup Register (WCMPDL) ... 78
5.20 Range Comparison Channel Select Register (WCMPSR) ... 79
5.21 Range Comparison Threshold Excess Flag Register (WCMRCOT) ... 80
5.22 Range Comparison Flag Register (WCMRCIF) ... 81
CHAPTER 1-3: A/D Timer Trigger Selection ... 83
1. Overview ... 84
2. Registers ... 85
2.1 Scan Conversion Timer Trigger Selection Register (SCTSL) ... 86
2.2 Priority Conversion Timer Trigger Selection Register (PRTSL) ... 87
CHAPTER 2: 12-bit D/A Converter ... 103
1. Overview ... 104
2. Configuration ... 105
3. Operations ... 106
4. Example of Setting Procedure ... 108
5. Registers ... 109
5.1 D/A Control Register (DACR) ... 110
5.2 D/A Data Register (DADR) ... 111
Appendixes ... 113
A. Register Map ... 114
1. Register Map ... 116
1.1 FLASH_IF ... 117
1.1.1 TYPE1-M4, TYPE2-M4 Products ... 117
1.1.2 TYPE3-M4 Product ... 118
1.1.3 TYPE4-M4, TYPE5-M4, TYPE6-M4 Products ... 119
1.2 Unique ID ... 120
1.3 ECC Capture Address ... 120
1.4 Clock/Reset ... 121
1.4.1 TYPE1-M4, TYPE2-M4 Products ... 121
1.4.2 TYPE3-M4, TYPE4-M4, TYPE5-M4, TYPE6-M4 Products ... 123
1.5 HW WDT ... 125
1.6 SW WDT ... 125
1.7 Dual_Timer ... 126
1.8 MFT ... 127
1.8.1 TYPE1-M4, TYPE2-M4 Products ... 127
1.8.2 TYPE3-M4, TYPE4-M4, TYPE5-M4, TYPE6-M4 Products ... 130
1.9 PPG ... 133
1.10 Base Timer ... 136
1.11 IO Selector for Base Timer ... 137
1.12 QPRC ... 138

1.12.1 TYPE1-M4, TYPE2-M4, TYPE6-M4 Products 138
1.12.2 TYPE3-M4, TYPE4-M4, TYPE5-M4 Products 139
1.13 QPRC NF 140
1.14 A/DC 141
1.15 CR Trim 142
1.16 EXTI 143
1.16.1 TYPE1-M4, TYPE2-M4, TYPE3-M4, TYPE4-M4 Products 143
1.16.2 TYPE5-M4, TYPE6-M4 Products 143
1.17 INT-Req. READ 144
1.17.1 TYPE1-M4, TYPE2-M4, TYPE6-M4 Products 144
1.17.2 TYPE3-M4, TYPE5-M4 Product 150
1.17.3 TYPE4-M4 Product 157
1.18 D/AC 164
1.19 HDMI-CEC 165
1.20 GPIO 166
1.20.1 TYPE1-M4, TYPE2-M4, TYPE6-M4 Products 166
1.20.2 TYPE3-M4 Product 173
1.20.3 TYPE4-M4 Product 182
1.20.4 TYPE5-M4 Product 190
1.21 LVD 199
1.22 DS_Mode 199
1.23 USB Clock 200
1.24 CAN_Prescaler 201
1.25 MFS 201
1.26 CRC 203
1.27 Watch Counter 203
1.28 RTC 204
1.28.1 TYPE1-M4, TYPE2-M4, TYPE3-M4, TYPE6-M4 Products 204
1.28.2 TYPE4-M4 Product 207
1.28.3 TYPE5-M4 Product 211
1.29 Low-speed CR Prescaler 212
1.30 Peripheral Clock Gating 213
1.30.1 TYPE1-M1, TYPE2-M4 Products 213
1.30.2 TYPE3-M4, TYPE4-M4 Products 213
1.30.3 TYPE5-M4, TYPE6-M4 Products 214
1.31 Smart Card Interface 215
1.32 MFSI2S 216
1.33 I2S Prescaler 217
1.33.1 TYPE1-M4, TYPE2-M4, TYPE3-M4 Products 217
1.33.2 TYPE4-M4 Product 218
1.34 GDC_Prescaler 219
1.35 EXT-Bus I/F 220
1.35.1 TYPE1-M4 Product 220
1.35.2 TYPE3-M4, TYPE4-M4, TYPE5-M4, TYPE6-M4 Products 223
1.36 USB 226
1.37 DMAC 228
1.38 DSTC 230
1.39 CAN 232

1.40 Ethernet-MAC 234
1.41 Ethernet-Control 234
1.42 I2S 235
1.43 SD-Card 235
1.44 CAN FD 236
1.45 Programmable-CRC 239
1.46 WorkFlash_IF 239
1.47 High-Speed Quad SPI Controller 240
1.47.1 TYPE1-M4, TYPE2-M4, TYPE3-M4 Products 240
1.47.2 TYPE4-M4 Product 243
1.48 HyperBus Interface 246
1.49 GDC Sub System Controller 247
1.50 GDC Sub System SDRAM Controller 250

B. List of Notes 251

1. Notes when High-speed CR is Used for the Master Clock 252

Major Changes 254

Revision History 255

CHAPTER 1-1: A/D Converter

This chapter explains the functions and operations of the A/D converter.

1. Configuration
2. Functions and Operations
3. Usage Precautions

1. Configuration

The A/D converter converts analog input voltage from an external pin to a digital value.

A/D Converter Configuration

- The maximum 3 units of A/D converters with 12-bit resolution have been installed.
- Any channel can be selected to any unit from the maximum 32 channels of analog input.
- The following triggers can be selected as an activation trigger for A/D conversion.
  - Priority conversion activation trigger

    Trigger input from an external pin
    Timer trigger input (base timer or multifunction timer)
    Software activation
  - Scan conversion activation trigger

    Timer trigger input (base timer or multifunction timer)
    Software activation

Figure 1-1 shows a block diagram of the A/D converter with the related circuits.

Figure 1-1 Block Diagram of the A/D Converter with the Related Circuits

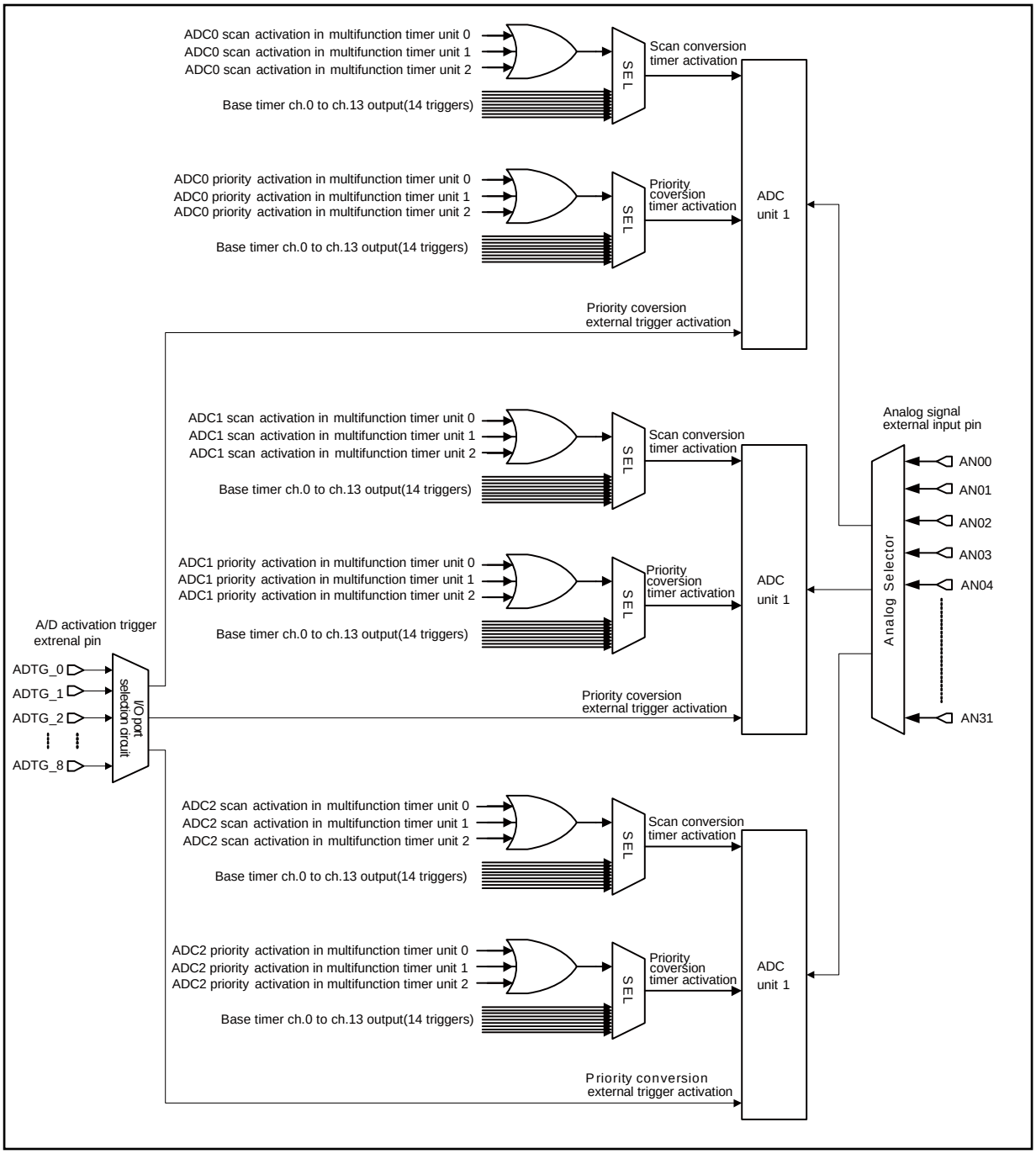

2. Functions and Operations

See descriptions of the following related chapters for functions and operations of the A/D converter.

12-bit A/D Converter Operation

See the chapter about the 12-bit A/D Converter for conversion operations of the 12-bit A/D converter.

12-bit A/D Timer Trigger Select Operation

See the chapter about the A/D Timer Trigger Selection for operations of the 12-bit A/D converter timer trigger selection.

3. Usage Precautions

- Simultaneous A/D conversion of multiple channels is possible on the products that have multiple A/D converters.
  Do not select the same input channel with the multiple units.

- Some channels of an analog input cannot be used for certain products. Do not change the selection registers (SCIS0, SCIS1, SCIS2, and SCIS3) or the sampling time selection registers (ADSS0, ADSS1, ADSS2, and ADSS3) for the channels that cannot be used from their initial values.

- In this family, P1A[2:0] of the priority conversion input selection register (PCIS) should be selected for an analog input channel during priority conversion. Always write 0 to the ESCE bit of the priority conversion control register (PCCR) of the 12-bit A/D converter.

- DMA transfer using the A/D interrupt request generation of this family supports only DMA transfer using generation of a scan conversion interrupt request. DMA transfer using a priority conversion interrupt request is not supported.

- Product specifications and Number of channels mounted

  The number of analog inputs mounted and the number of base timer channels used for AD Startup trigger are different by products.
  For details, see Product Configuration in Data Sheet of the product used.

CHAPTER 1-2: 12-bit A/D Converter

This chapter explains the functions and operations of the 12-bit A/D converter.

1. Overview
2. Configuration
3. Explanation of Operations
4. Setup procedure Examples
5. Registers

1. Overview

The 12-bit A/D converter is a function that converts analog input voltages into 12-bit digital values using a type of the RC Successive Approximation register.

Features of the 12-bit A/D Converter

- 12-bit resolution
- Converter using a type of RC Successive Approximation register with sample and hold circuits
- Two sampling times selectable for each input channel
- Scan conversion operation:
  - Multiple analog inputs can be selected from multiple channels.
  - Start factors are software and timers.
  - Repeat mode is available.
- Priority conversion operation:

  Even during scan operation, if a start factor of priority conversion occurs, it is possible to interrupt the ongoing scan conversion and perform conversion with high priority (There are two priority levels: 1 and 2. Priority level 1 is higher than priority level 2.).
  Start factors are software and timers (priority level 2), and external triggers (priority level 1).
- FIFO function:
  - Sixteen FIFO stages for scan conversion and four FIFO stages for priority conversion are incorporated.
  - An interrupt is generated when data is written in the specified count of FIFO stages.
- Changeable A/D conversion data placement (selectable between shift to the MSB side and shift to LSB side)
- The A/D conversion result comparison function is available.
- Range comparison function
  - Upper and lower limits can be specified
  - Either detection of within the range or without the range can be set.
  - With the continuous detection, the noise can be removed. The continuous detection time can be specified from 1 to 7.
  - For the detection of without the range, over the upper limit or below the lower limit can be specified.
- There are five interrupt factors as follows:
  1. Scan conversion FIFO stage count interrupt
  2. Priority conversion FIFO stage count interrupt
  3. FIFO overrun interrupt (for both scan and priority conversion processes)
  4. A/D conversion result comparison interrupt
  5. Range comparison interrupt
- DMA transfer triggered by an interrupt request.

2. Configuration

This section provides the configuration of the 12-bit A/D converter.

12-bit A/D Converter Block Diagram

Figure 2-1 12-bit A/D Converter Block Diagram

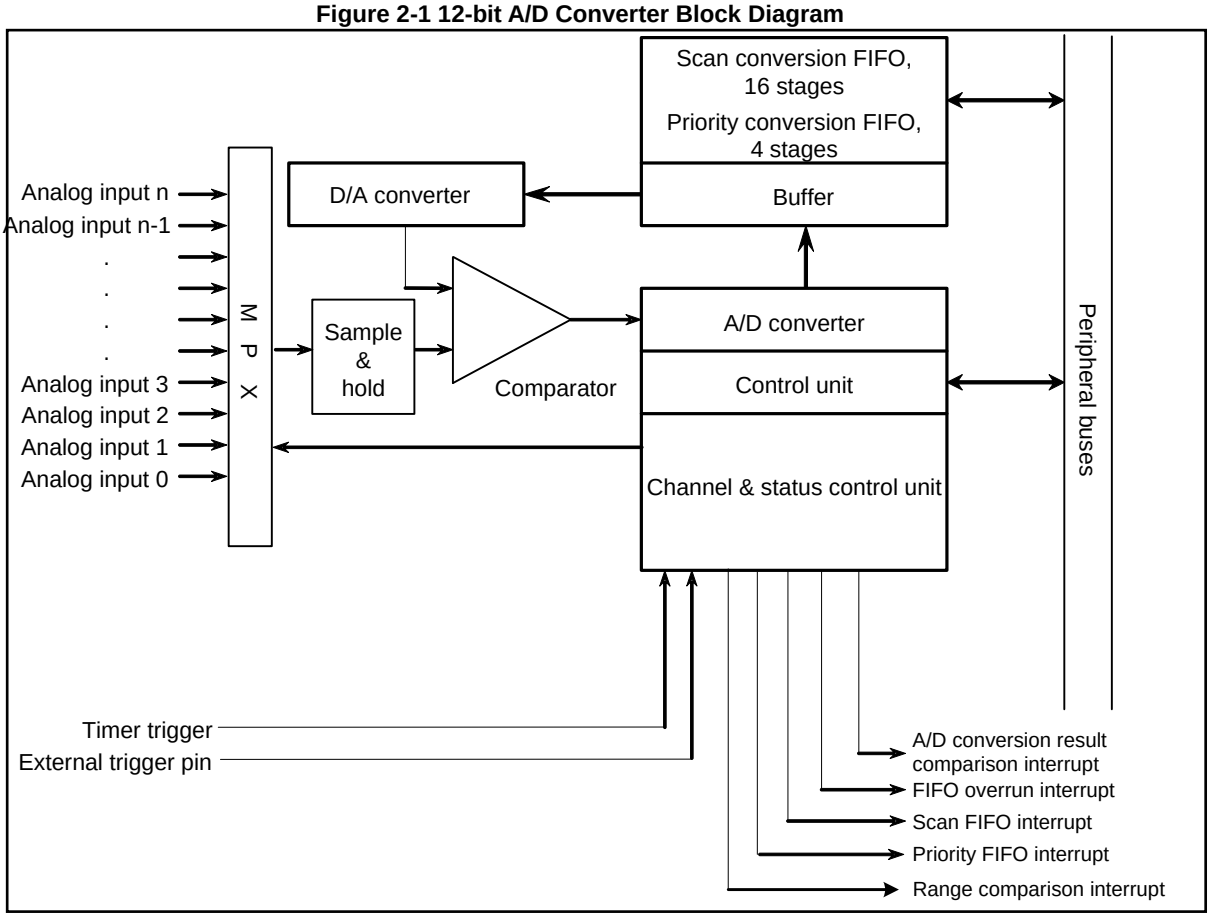

Input Impedance

The sampling circuit of the A/D converter is shown as an equivalent circuit in Figure 2-2. See the "Electrical Characteristics" in "Data Sheet" to make sure that the external impedance, Rext should be selected not to exceed the sampling time.

Figure 2-2 Input Impedance Equivalent Circuit Diagram

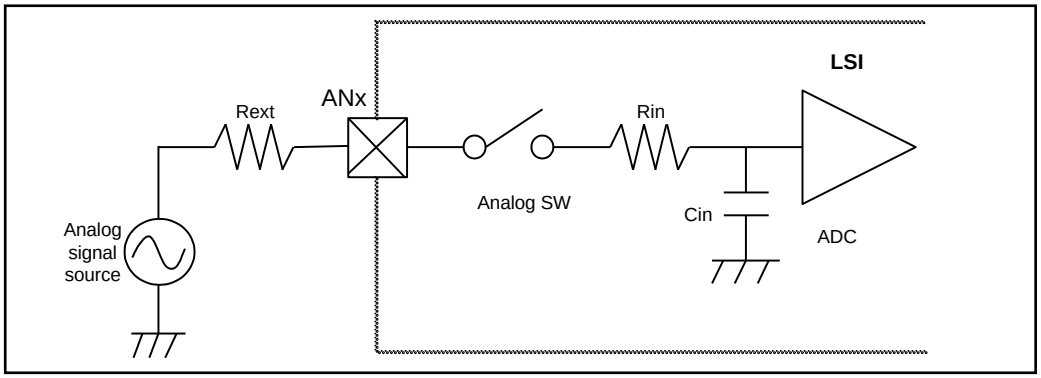

3. Explanation of Operations

This section explains the operations of the 12-bit A/D converter.

3.1. Enabling Operations of the A/D Converter
3.2. A/D Conversion Operation
3.3. FIFO Operations
3.4. A/D Comparison Function
3.5. Range Comparison Function
3.6. Starting DMA

3.1 Enabling Operations of the A/D Converter

This section explains enabling operations of the A/D converter.

The A/D converter must be in the operation enable state prior to A/D conversion. Writing "1" to the ENBL bit of the A/D Operation Enable Setup Register (ADCEN) turns the A/D converter from the operation stop state to the operation enable state after the period of operation enable state transitions. On the other hand, writing "0" to the ENBL bit of the ADCEN register turns the A/D converter immediately to the operation stop state.

A/D conversion can be performed only in the operation enable state. An A/D conversion request in the operation stop state is ignored. If the A/D converter enters the operation stop state during A/D conversion, A/D conversion stops immediately.

Reading the READY bit of the ADCEN register allows you to check whether the A/D converter is in the operation enable state or not.

3.2 A/D Conversion Operation

The A/D converter can perform two types of conversion processes: scan conversion and priority conversion.

3.2.1. Scan Conversion Operation

3.2.2. Priority Conversion Operation

3.2.3. Priority Levels and State Transitions

3.2.1 Scan Conversion Operation

This section explains the scan conversion operation.

The input channels are selected in the Scan Conversion Input Selection Register (SCIS). By setting the corresponding bit in the SCIS to 1, any necessary channel can be selected from among multiple analog input channels.

The A/D converter can be started by software or a timer. To start the converter by software, set the SSTR bit in the Scan Conversion Control Register (SCCR) to 1. Then conversion starts. To start the converter by timers, set the SHEN bit in the SCCR register to 1 to enable timer start. Conversion starts when the timer's rising edge is detected. When conversion starts, the SCS bit in the ADSR register is set to 1. When the conversion is completed, the SCS bit is reset to 0.

When the SSTR bit in the SCCR register is set to 1 again during A/D conversion or the timer's rising edge is detected again while timer start is enabled, the ongoing conversion operation is immediately stopped and initialized and the A/D conversion is performed again (the operation is restarted).

The available scan conversion modes are as follows:

1. One-shot mode for a single channel

   This mode is selected when only one analog priority conversion is specified for scan conversion and RPT = 0 in the SCCR register. When the selected priority conversion is completed, the operation stops.

Figure 3-1 Stop of Operation in One-shot Mode for a Single Channel (SCIS3 = 0x00, SCIS2 = 0x00, SCIS1 = 0x00, SCIS0 = 0x08)

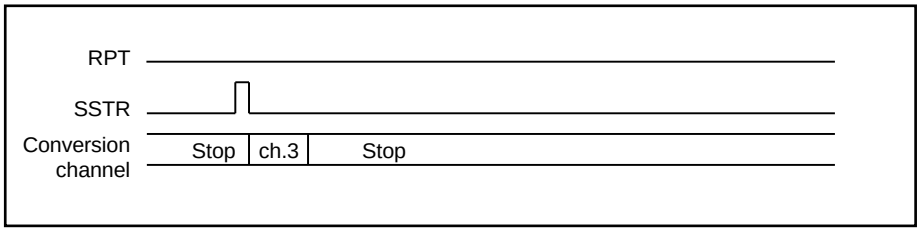

2. Continuous mode for a single channel

   This mode is selected when only one analog priority conversion process is specified for scan conversion and RPT = 1 in the SCCR register. When the selected priority conversion is completed, the same priority conversion is started again. To stop A/D conversion, set RPT bit to 0. The operation stops when the ongoing A/D conversion is completed.

Figure 3-2 Stop of Operation in Continuous Mode for a Single Channel (SCIS3 = 0x00, SCIS2 = 0x00, SCIS1 = 0x00, SCIS0 = 0x08)

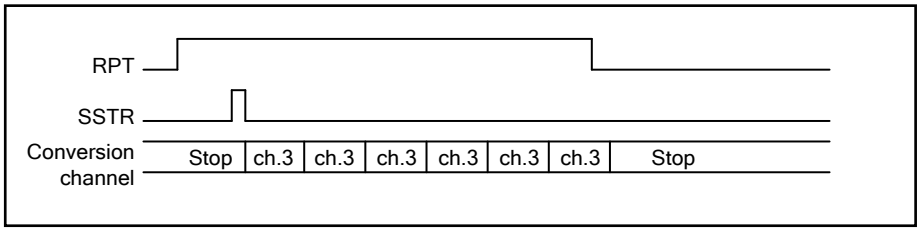

3. One-shot mode for multiple channels

   This mode is selected when multiple analog channels are specified for scan conversion and RPT = 0 in the SCCR register. When the conversion starts, the existence of each channel is automatically checked. While the channels are switched from one to another, A/D conversion is started and the conversion result is written to the FIFO when the conversion is completed. The conversion channels are selected in descending order of channel number (starting from ch.0). Channels not selected in the SCIS register are skipped and the conversion operation targets the next selected channel. When the A/D conversion of the last one of the selected channels is completed, the A/D conversion is stopped.

Figure 3-3 Stop of Operation in One-shot Mode for Multiple Channels (SCIS3 = 0x00, SCIS2 = 0x01, SCIS1 = 0x01, SCIS0 = 0x11)

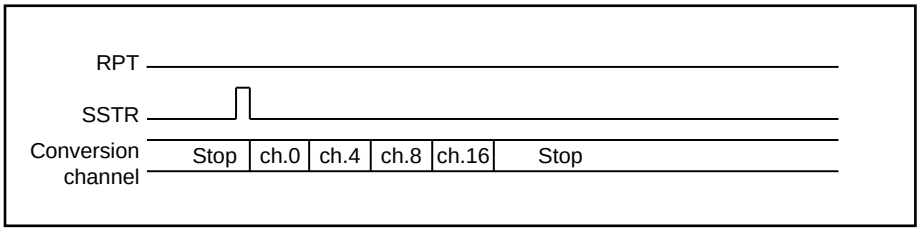

4. Continuous mode for multiple channels

   This mode is selected when multiple analog channels are specified for scan conversion and RPT = 1 in the SCCR register. When the conversion starts, the existence of each channel is automatically checked. While the channels are switched from one to another, A/D conversion is started and the conversion result is written to FIFO when the conversion is completed. The conversion channels are selected in descending order of channel number (starting from ch.0). Channels not selected in the SCIS register are skipped and the conversion operation targets the next selected channel. When the A/D conversion of the last one of the selected channels is completed, the conversion operation starts again from ch.0. To end A/D conversion, clear the RPT bit to 0. The operation stops when the A/D conversion of the last one of the selected channels is completed.

Figure 3-4 Stop of Operation in Continuous Mode for Multiple Channels (SCIS3 = 0x00, SCIS2 = 0x01, SCIS1 = 0x01, SCIS0 = 0x11)

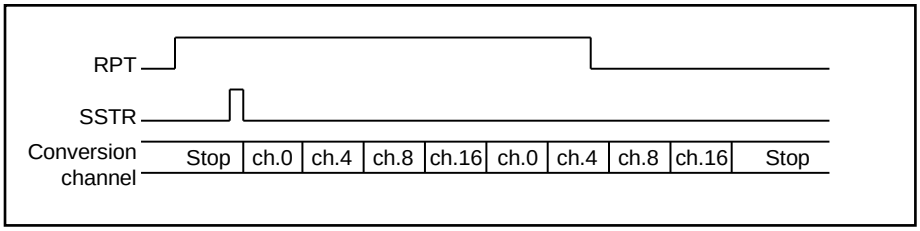

3.2.2 Priority Conversion Operation

This section explains the priority conversion operation.

This mode is used to give priority to a specific conversion process. Even when scan conversion is in progress, if priority conversion is started, the scan conversion is interrupted immediately and the priority conversion is performed. When the priority conversion is completed, the scan operation restarts from the channel where it was interrupted. If conversion with higher priority (priority level 1) is started while the conversion with lower priority (priority level 2) is performed, the priority level 2 conversion is interrupted immediately and the priority level 1 conversion is performed. When the priority level 1 conversion is completed, the priority level 2 conversion is restarted.
Two levels of priority are given to priority conversion. Priority level 1 is the highest and priority level 2 is the second. Trigger start by an external pin is assigned as the start factor at priority level 1 and software/timer start is assigned as that at priority level 2.

- The input channels are selected in the Priority Conversion Input Selection register (PCIS).

  The procedure for selecting channels at priority level 1 differs depending on the ESCE bit in the Priority Conversion Control register (PCCR).
  When ESCE = 0: The P1A[2:0] bits in the PCIS register are used. Only one of the eight channels, ch.0 to ch.7, can be selected.
  When ESCE = 1: The setting of the P1A[2:0] bits in the PCIS register is ignored. Only one of the eight channels, ch.0 to ch.7, can be selected with input from the external pin (ECS[2:0]).

  Example: ECS[2:0] = 000 -> ch.0
  = 010 -> ch.2
  = 111 -> ch.7

- The P2A[4:0] bits in the PCIS register are used for selecting the channel at priority level 2. Only one of the multiple input channels can be selected.

The start factor of A/D conversion differs depending on the priority level.

- Priority level 1 (highest priority) conversion can be started by a falling edge of external trigger input.

  To enable external trigger start, set the PEEN bit in the PCCR register to 1.

- Priority level 2 conversion can be started by software or a timer.

  To start conversion by software, set the PSTR bit in the PCCR register to 1. To start conversion by a timer, set the PHEN bit in the PCCR register to 1 to enable timer start. Conversion starts when the timer's rising edge is detected. When conversion starts, the PCS bit in the ADSR register is set to 1. When the conversion is completed, the PCS bit is reset to 0.

In priority conversion mode, the conversion cannot be restarted. In addition, start factors at the same priority level are ignored.
(A timer start factor is ignored during software-started operation.)

If a priority level 1 start factor (external trigger) occurs during conversion started by a priority level 2 start factor (software or timer), the PCNS bit in the A/D Status register (ADSR) is set to 1 and the priority level 2 conversion is interrupted immediately. When the priority level 1 conversion is completed, PCNS is reset to 0 and the interrupted priority level 2 conversion is restarted. If a priority level 2 start factor occurs during priority level 1 conversion, the priority level 2 start factor is reserved (retained) and PCNS bit is set to 1. When the priority level 1 conversion is completed, PCNS bit is reset to 0 and the priority level 2 conversion is started.

Priority conversion can only be performed in one-shot mode for a single channel.

3.2.3 Priority Levels and State Transitions

This section explains priority levels and state transitions.

Priority Levels

Table 3-1 Priority Levels for the A/D Converter

Priority level	Conversion type	Start factor
1	Priority level 1 conversion	- Input from external trigger pin (at falling edge)
2	Priority level 2 conversion	- Software (when the priority conversion start bit (PSTR) of priority conversion control register (PCCR) is set to 1) - Trigger input from timer (at rising edge)
3	Scan conversion	- Software (when the scan conversion start bit (SSTR) of scan conversion control register (SCCR)is set to 1) - Trigger input from timer (at rising edge)

- When a startup by priority conversion occurs during scan conversion

  The scan conversion operation is interrupted and priority conversion operation is performed. When the priority conversion operation is completed, the scan conversion is restarted from the channel where it was interrupted.

- When a startup at priority level 1 occurs during conversion at priority level 2

  The priority level 2 conversion is interrupted and the operation by the startup at priority level 1 is performed. When the priority level 1 operation is completed, the priority level 2 conversion is restarted automatically.

- When a startup at priority level 2 occurs during conversion at priority level 1

  The start factor at priority level 2 is retained. When the priority level 1 conversion is completed, the priority level 2 conversion is started automatically.

- When a startup of scan conversion occurs during priority level 1 conversion

  The start factor of the scan conversion is retained. When the priority level 1 conversion is completed, the scan conversion operation is started automatically.

- When a startup of scan conversion occurs during priority level 2 conversion

  The start factor of the scan conversion is retained. When the priority level 2 conversion is completed, the scan conversion operation is started automatically.

- While priority conversion is performed, start factor at the same priority level are masked (the operation is not restarted).

State Transitions

Figure 3-5 12-bit A/D Converter State Transitions

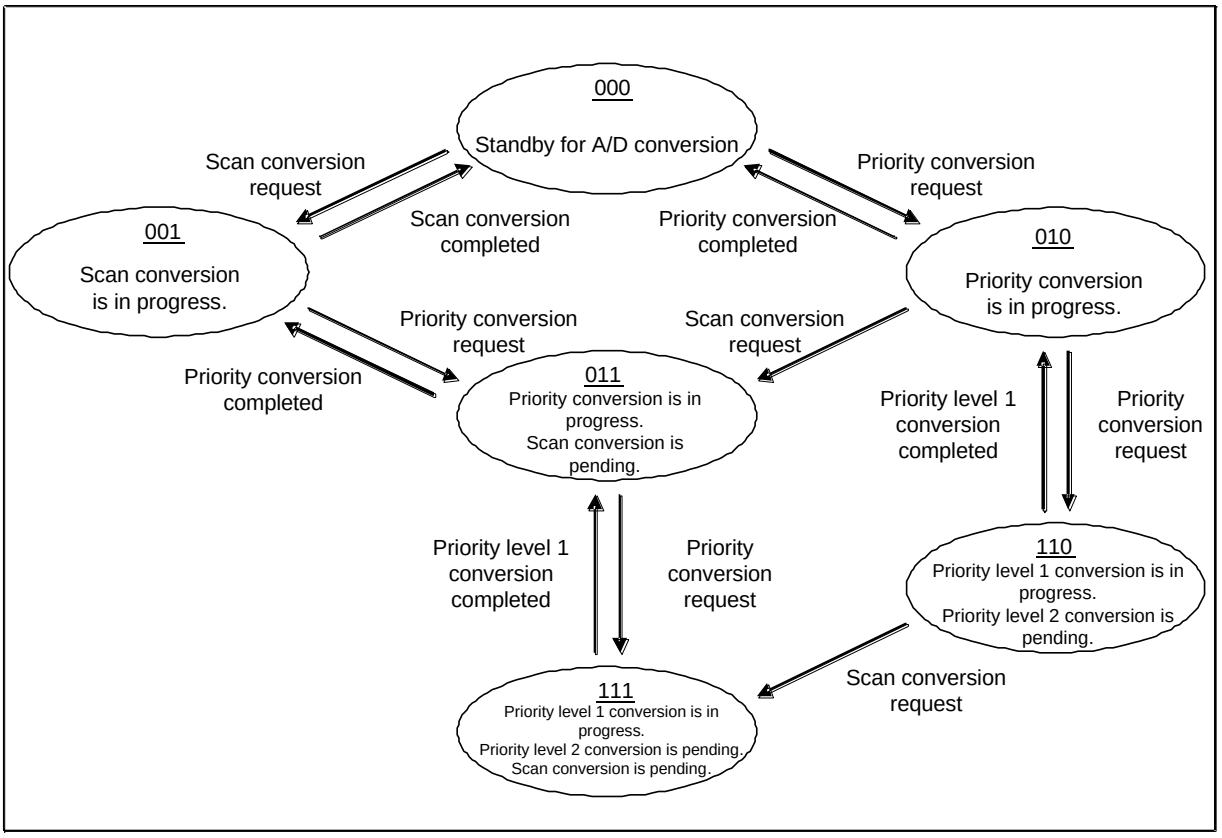

The operation states can be read from the PCNS, PCS, and SCS bits of the ADSR register.

Table 3-2 Correspondence between Bits and Operation States

PCNS	PCS	SCS	Explanation of states
0	0	0	Standby for A/D conversion.
0	0	1	Scan A/D conversion is in progress.
0	1	0	Priority A/D conversion (priority level 1 or 2) is in progress.
0	1	1	Priority A/D conversion (priority level 1 or 2) is in progress. Scan conversion is pending.
1	1	0	Priority A/D conversion (priority level 1) is in progress. Priority conversion (priority level 2) is pending.
1	1	1	Priority A/D conversion (priority level 1) is in progress. Scan conversion and priority conversion (priority level 2) are pending.

3.3 FIFO Operations

The A/D converter has 16 FIFO stages for scan conversion and 4 FIFO stages for priority conversion. When conversion data is written in the specified count of FIFO stages, an interrupt is generated to the CPU.

3.3.1. FIFO Operations in Scan Conversion

3.3.2. Interrupts in Scan Conversion

3.3.3. FIFO Operations in Priority Conversion

3.3.4. Interrupts in Priority Conversion

3.3.5. Validity of FIFO Data

3.3.6. Bit placement Selection for FIFO Data Registers

3.3.1 FIFO Operations in Scan Conversion

This section explains FIFO operations in scan conversion.

Sixteen FIFO stages are incorporated for writing scan conversion data. After reset, they are in empty state and the SEMP bit in the Scan Conversion Control Register (SCCR) is set to 1. When A/D conversion of one channel is completed, the conversion result, start factor, and conversion channel are written in the first FIFO stage. This resets SEMP bit to 0. The conversion result, start factor, and conversion channel for the next channel are written sequentially in the second FIFO stage.

When such data is written in all of the 16 stages, the SFUL bit is set to 1 to indicate that FIFO is in full state. If conversion is performed and an attempt is made to write data in FIFO when FIFO is in full state, the SOVR bit is set to 1 and the data is discarded (cannot overwrite the existing data).

To clear the data in FIFO, set the SFCLR bit in the Scan Conversion Control register to 1. FIFO goes to the empty state and the SEMP bit is set to 1.

Data in FIFO can be read sequentially by reading the Scan Conversion FIFO Data Register (SCFD). To perform a byte (8 bits) access to this register, read the most significant byte (bit31:24) to shift FIFO (reading the other bytes (bit23:16, bit15:8, bit7:0) does not shift FIFO). To perform a half word (16 bits) access to this register, read the most significant half word (bit31:16) to shift FIFO (reading the other byte (bit15:0) does not shift FIFO). Performing a word (32 bits) access to this register shifts FIFO.

3.3.2 Interrupts in Scan Conversion

This section explains interrupts in scan conversion.

Figure 3-6 FIFO Interrupt Settings and FIFO Operations

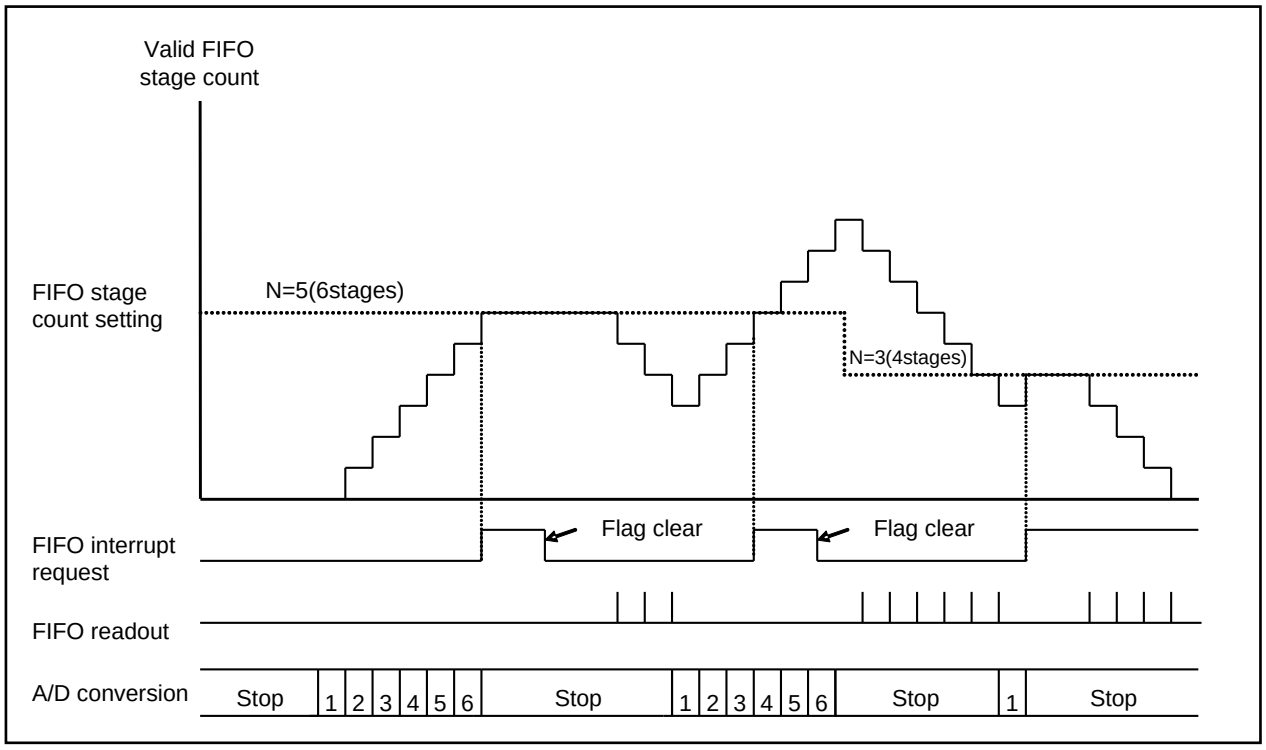

When conversion data for the number of FIFO stages (N + 1) set in SFS[3:0] in the Scan Conversion FIFO Stage Count Setup Register (SFNS) is written in the FIFO, the interrupt request bit (SCIF) in the A/D Control Register (ADCR) is set to 1. If the interrupt enable bit (SCIE) is set to 1, an interrupt request is generated to the CPU.

The following explains FIFO stage count interrupt methods for each scan conversion mode.

1. One-shot mode for a single channel

   To generate an interrupt after the completion of one conversion process for the specified channel, set SFS[3:0] = 0x0. When conversion data is written in the first FIFO stage, SCIF bit is set to 1.

Note:

- *If SFS[3:0] bits are set to 0x1 or more (two stages or more), interrupts are not generated until conversion data is written into FIFO by the specified stage count.*

2. Continuous mode for a single channel

   To generate an interrupt after the completion of one conversion process for the specified channel, set SFS[3:0] = 0x0. When conversion data is written in the first FIFO stage, SCIF bit is set to 1. To generate an interrupt at the completion of a number of times of conversion of the specified channel, set SFS[3:0] bits to 0x1 or more (two stages or more). For example, set SFS[3:0] = 0x3 to generate an interrupt after four repeats.

3. One-shot mode for multiple channels

   To generate an interrupt after the completion of conversion of the multiple specified channels, set the FIFO stage count according to the number of channels. If eight channels are selected, set the FIFO stage count by setting SFS[3:0] = 0x7. When the conversion of the last one of the selected channels is completed, SCIF bit is set to 1.
   An interrupt can be generated at any timing before scan completion by setting SFS[3:0] bits to a value less than the number of selected channels.

4. Continuous mode for multiple channels

   To generate an interrupt after the completion of the first scan of the multiple specified channels, set the FIFO stage count according to the number of channels. If eight channels are selected, set the FIFO stage count by setting SFS[3:0] = 0x7. When the conversion of the last one of the selected channels is completed, SCIF bit is set to 1.
   To generate an interrupt after the completion of the second scan, set the FIFO stage count to twice the number of selected channels. For example, when four channels are selected, set the FIFO stage count to 8 (SFS[3:0] = 0x7). An interrupt is generated when the second scan is completed.
   Because the FIFO stage count can be set to any value, an interrupt can be generated at any desired timing.

3.3.3 FIFO Operations in Priority Conversion

This section explains FIFO operations in priority conversion.

Four FIFO stages are incorporated for writing priority conversion data. After reset, they are in empty state and the PEMP bit in the Priority Conversion Control Register is set to 1. When one A/D conversion process is completed, the conversion result, start factor, and conversion channels are written in the first FIFO stage. This resets SEMP bit to 0. The conversion result and conversion channels for the subsequent conversion processes are written in the corresponding FIFO stages.

When such data is written in all of the 4 stages, the PFUL bit is set to 1 to indicate that FIFO is in full state. If conversion is performed and an attempt is made to write data in FIFO when FIFO is in full state, the POVR bit is set to 1 and the data is discarded (cannot overwrite the existing data).

To clear the data in FIFO, set the PFCLR bit in the Priority Conversion Control Register (PCCR) to "1". FIFO goes to the empty state and the PEMP bit is set to 1.

Data in FIFO can be read sequentially by reading the Priority Conversion FIFO Data Register (PCFD). To perform byte (8 bits) access to this register, read the most significant byte (bit31:24) to shift FIFO (reading the other bytes (bit23:16, bit15:8, bit7:0) does not shift FIFO). To perform a half word (16 bits) access to this register, read the most significant half word (bit31:16) to shift FIFO (reading the other byte (bit15:0) does not shift FIFO). Performing a word (32 bits) access to this register shifts FIFO.

3.3.4 Interrupts in Priority Conversion

This section explains interrupts in priority conversion.

When conversion data for the number of FIFO stages (N + 1) set in PFS[1:0] in the Priority Conversion FIFO Stage Count Setup register (PFNS) is written in FIFO, the interrupt request bit (PCIF) in the A/D Control register (ADCR) is set to 1. If the interrupt enable bit (PCIE) is set to "1", an interrupt request is generated to the CPU.

The following explains FIFO stage count interrupt methods in priority conversion.

To generate an interrupt after the completion of one conversion process for the specified channel, set PFS[1:0] = 0x0. When conversion data is written in the first FIFO stage, PCIF bit is set to 1.

Note:

- *If PFS[1:0] bits are set to 0x1 or more (two stages or more), interrupts are not generated until conversion data is written into FIFO by the specified stage count.*

3.3.5 Validity of FIFO Data

This section explains a restriction on reading FIFO data registers.

The bit12 of the Scan Conversion FIFO Data Register (SCFD) and Priority Conversion FIFO Data Register (PCFD) comes with the INVL (A/D conversion result disable) bit which indicates data validity. During reading FIFO data registers, the INVL bit is cleared to 0 if data is valid while the INVL bit is set to 1 if data is invalid.

For word (32 bits) reading, data validity can be checked by the INVL bit.

For half word (16 bits) reading which does not use interrupts or empty bits (SEMP, PEMP), always start reading from the least significant 16 bits including the INVL bit. If the INVL bit is 1 at this time, reading the most significant 16 bits is prohibited. The most significant 16 bits must be read only when the INVL bit is 0.

For byte (8 bits) reading which does not use interrupts or empty bits (SEMP, PEMP), always start reading from bit15:8 including the INVL bit. If the INVL bit is 1 at this time, reading bit31:24, bit23:16, or bit7:0 is prohibited. They must be read only when the INVL bit is 0.

3.3.6 Bit placement Selection for FIFO Data Registers

This section explains bit placement selection for FIFO data registers.

The A/D converter can change the bit placement for the conversion results in the Scan Conversion FIFO Data Register (SCFD) and Priority Conversion FIFO Data register (PCFD) with the FDAS bit in the A/D Status Register (ADSR) (Figure 3-7).

Setting the FDAS bit to 1 places 12-bit A/D conversion results (SD11 to SD0, PD11 to PD0) on the LSB side (bit27:16) when a FIFO data register is read. Placement of the least significant 16 bits of a FIFO data register does not change.

FIFO is shifted, regardless of the set value of the FDAS bit, by reading bit31:24 (for a byte access), bit31:16 (for a half word access), or bit31:0 (for a word access) of a FIFO data register.

Figure 3-7 FIFO Data Register Bit Placement

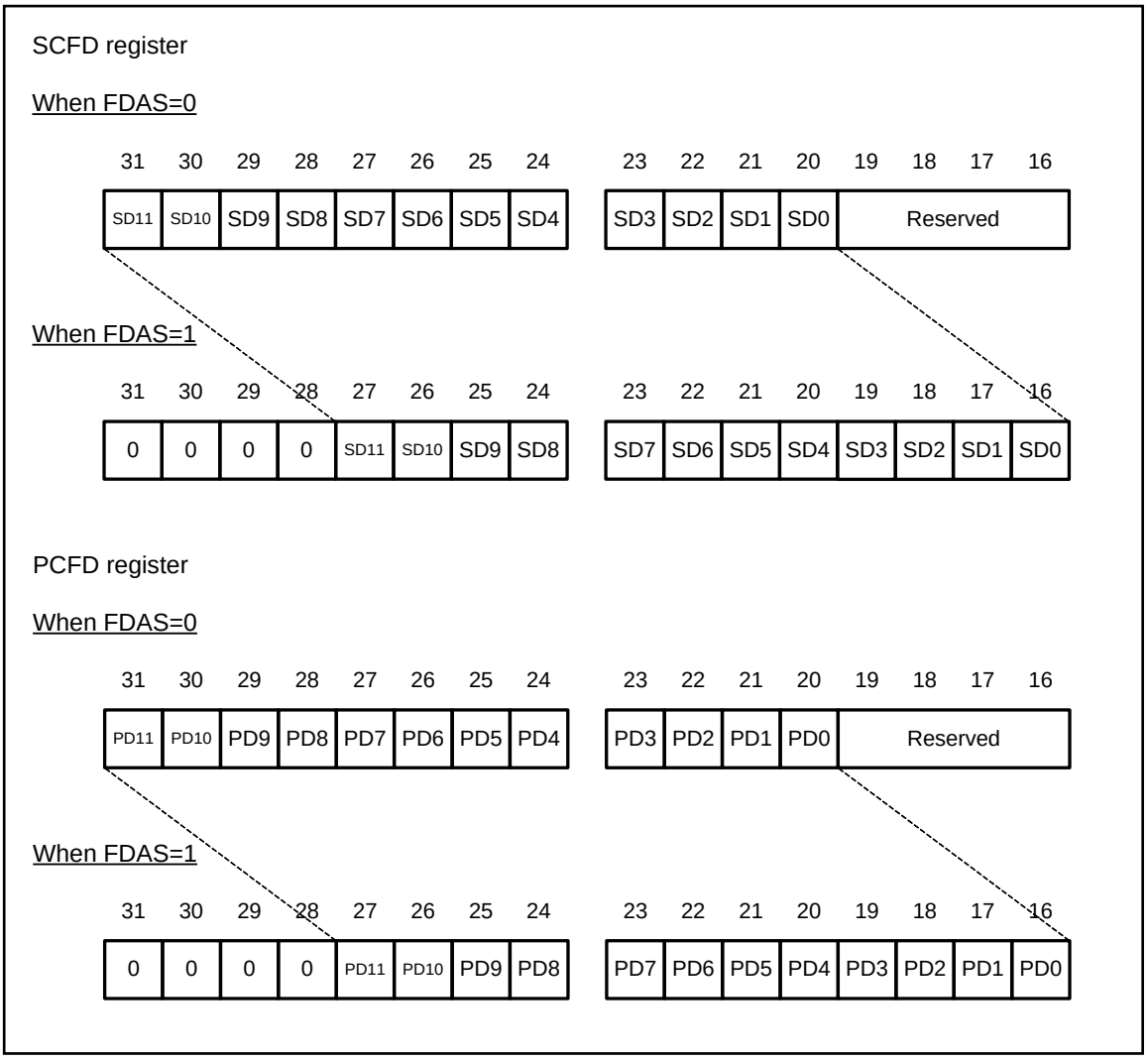

3.4 A/D Comparison Function

The A/D comparison function compares A/D conversion results and generates interrupts.

To use the comparison function, set the CMPEN bit in the A/D Comparison Control Register (bit7 in the CMPCR register) to 1.

The values set in the A/D Comparison Value Setup Register (CMPD) are compared with the most significant 10 bits (bit11:2) of the A/D conversion result. If the comparison result satisfies the conditions set in the A/D Comparison Control Register (CMPCR), the A/D comparison interrupt bit (CMPIF) in the ADCR register is set to 1. If the interrupt enable bit (CMPIE) is 1, an interrupt is generated to the CPU.

Note:

- *Two bits (bit1:0) on the LSB side are not compared.*

Because the result of A/D conversion, regardless of scan or priority, is compared before it is written to FIFO, comparison is possible when FIFO is full.

If CMD1 bit is set to 1 (to generate an interrupt when the result is equal to or more than the CMPD set value), CMPIF is set to 1 when the conversion result is equal to the value in the A/D Comparison Value Setup Register (CMPD).

3.5 Range Comparison Function

The range comparison function is a function to determine whether the conversion result of the A/D converter is within or outside the specified range and generate an interrupt.

To start the range comparison function, write 1 to the range comparison enabling setting (RCOE) of Range Comparison Control register (WCMPCR).

The upper 10 bits (bit11:2) of the A/D conversion result is compared with the upper threshold setting register (WCMPDH) and the lower threshold setting register (WCMPDL).

Note:

- *The comparison with two bits (bit1, bit0) on the LSB side is not executed.*

When the within-range /outside-range confirmation select (RCOIRS) of Range Comparison Control Register is 1, the A/D conversion result is confirmed to be outside of the specified range.

Table 3-3 shows the detection conditions of the range comparison and Figure 3-8 shows the operation of the range comparison.

Table 3-3 Range Comparison Conditions

Range Comparison Result	Outside-Range Confirmation (RCOIRS="0")	Within-Range Confirmation (RCOIRS="1")	Remarks
Outside range (beyond upper limit threshold) A/D data bit > upper limit threshold setting register	Detected	Not detected	Figure 3-8 : 2,6
Within Range A/D data bit ≥ lower limit threshold setting register And, A/D data bit ≤ upper limit threshold setting register	Not detected	Detected	Figure 3-8 : 1,4,5
Outside range (below lower limit threshold) A/D data bit < lower limit threshold setting register	Detected	Not detected	Figure 3-8 : 3

Figure 3-8 Range Comparison Operation

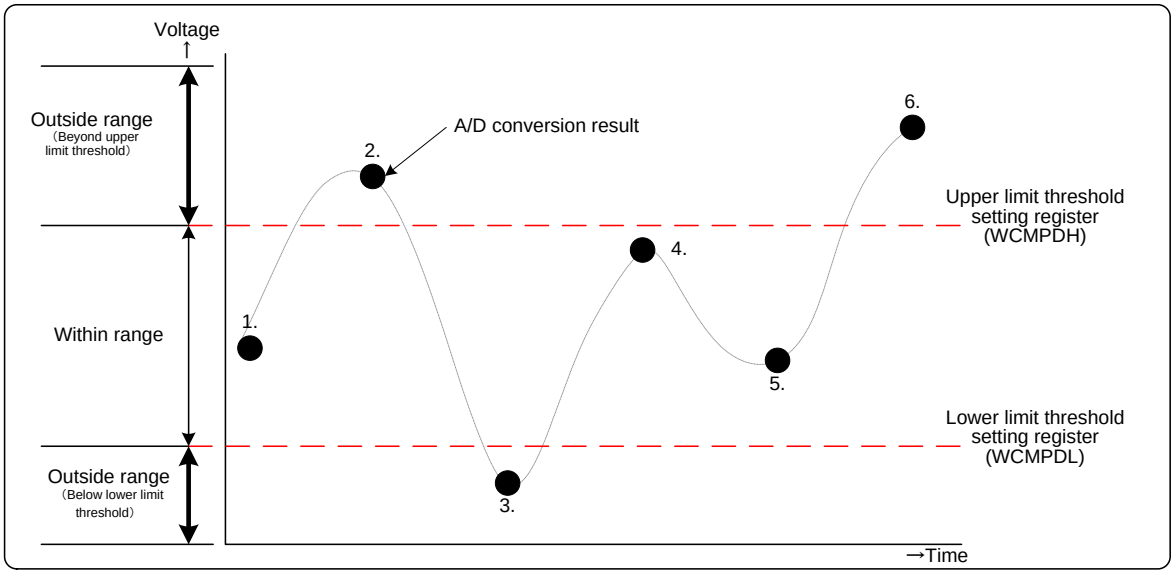

The Continuous detection function detects the range comparison continuously, and removes the noise etc. When the range comparison is continuously detected for the times specified in continuous detection count specification and state setting (RCOCD) of the range comparison control register (WCMPCR), the range comparison flag register (RCINT) is set to 1. When the range comparison interrupt enable bit (RCOIE) is set to "1", the interrupt is generated for CPU.

When the range comparison result is found to be undetected even one time in the continuous detection, the continuous detection measurement is cleared to 0 times, and restarts the measurement.

For the continuous detection conditions, see Table 3-4.

Table 3-4 Continuous Detection Conditions

Items	Descriptions
Continuous detection measurement operation	The detection is always operated whenever the continuous comparison execution enable setting (RCOE) is set to "1".
Continuous detection count	− With the continuous detection count specification (RCOCD), the detection count can be selected from 1 to 7 times. − With the continuous detection count status display (RCOCD), the state of the detection count can be confirmed.
Clear conditions	− When the range comparison execution enable setting (RCOE) is set to "0". − When the result is undetected with the range comparison result.
Increment condition	When the result is detected with the range comparison result. However, when the detection count reaches the continuous detection count specification (RCOCD), the detection is stopped at the continuous detection count specification value

Note:

- *When the confirmation of outside-range (WCMPCR.RCOIRS) is 0, the continuous detection measurement is not cleared to 0 times, and continues the continuous detection even if the range comparison result is changed from the state of the upper limit threshold excess to the state of below lower limit threshold.*
  To initialize the state of the continuous detection count of the range comparison result, disable the range comparison while A/D conversion is not required, and then enable the range comparison again.

When the confirmation of outside-range of the range comparison (RCOIRS) is "0",the state of the upper limit threshold excess or the state of below lower limit threshold can be confirmed with the range comparison threshold excess flag bit (RCOOF).
For the judgment conditions of the Range Comparison Threshold Excess Flag, see Table 3-5.

Table 3-5 Range Comparison Threshold Excess Flag, Judgment Conditions

Range Comparison Result	Range Comparison Threshold Excess Flag Bit(RCOOF)	
	Outside-range confirmed (RCOIRS="0")	Within-range confirmed (RCOIRS="1")
Outside range (beyond upper limit threshold) A/D data bit > upper limit threshold setting register	"1"	Prior value held
Within Range A/D data bit ≥ lower limit threshold setting register And, A/D data bit ≤ upper limit threshold setting register	Prior value held	Prior value held
Outside range (below lower limit threshold) A/D data bit < lower limit threshold setting register	"0"	Prior value held

Moreover, the range comparison threshold excess flag bit (RCOOF) holds the content set in itself while the comparison interrupt factor flag (RCINT) is set to 1.

For the operation example of the range comparison function, see Figure 3-9.

Figure 3-9 Range Comparison Function Operation Example

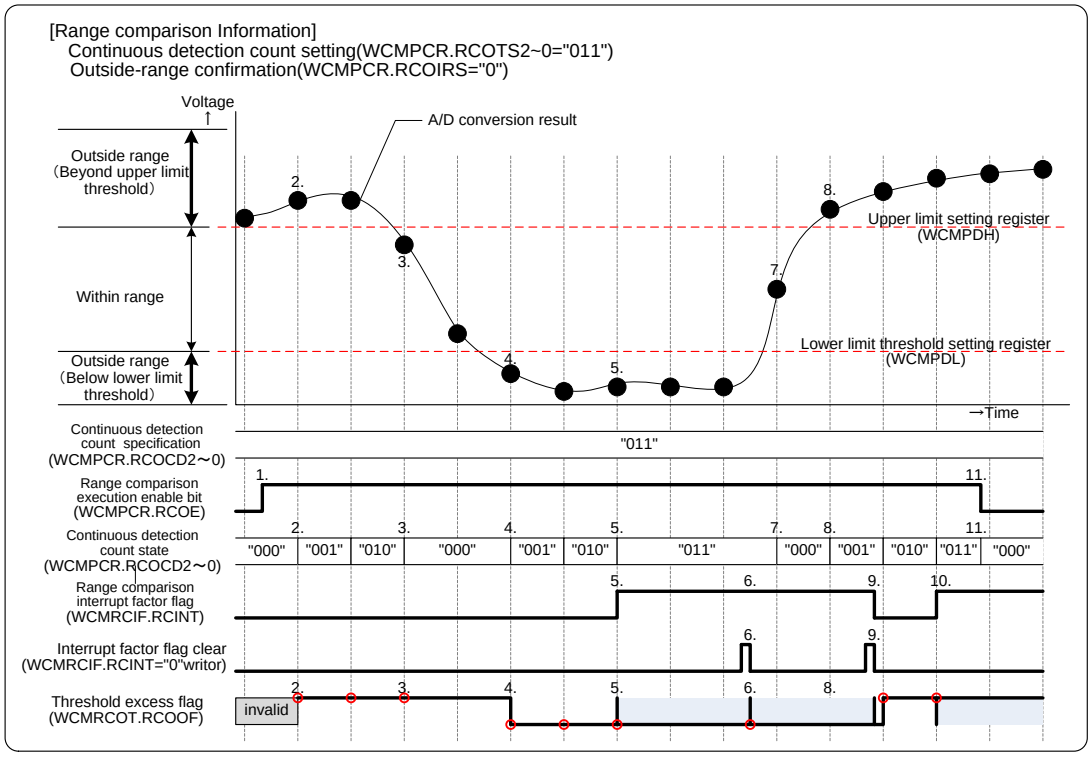

The explanation of range comparison function operation in Figure 3-9 is as follows:

1. When the range comparison execution disable setting (RCOE) is 0, the continuous detection count state (RCOCD) is initialized to 000.
   When the range comparison execution disable setting (RCOE) is set to 1, the range comparison operation is started.
2. When the range comparison result exceeds the upper limit threshold , the continuous count detection state (RCOCD) begins to increment.
   Moreover, the threshold excess flag notifies the upper limit threshold excess (RCOOF=1).
3. Before the continuous detection count specification value (RCOCD) becomes 011, the range comparison result is found to be within the range. So, the continuous detection count state (RCOCD) is initialized to be 000.
   Furthermore, the threshold excess flag (RCOOF) holds the prior value.
4. Because the range comparison result is below the lower limit threshold, the continuous count detection state (RCOCD) executes the increment.
   And, the threshold excess flag notifies that the result is below the lower limit threshold (RCOOF=0).
5. As the range comparison result reaches continuously the continuous detection count specification value (RCOCD =011), the range comparison interrupt factor flag (RCINT) is set to be 1.
   Moreover, the threshold excess flag (RCOOF) sets the threshold excess state where the range comparison interrupt factor flag is set (RCINT=1) and holds the state until the range comparison interrupt factor flag is cleared (RCINT=0).
6. The set operation by the state of the continuous detection is given priority when the state of the range comparison interrupt factor flag clear (RCINT=0) and the state of the continuous detection compete.
   The range comparison interrupt factor flag is set (RCINT=1) and the threshold excess flag (RCOOF) set to the threshold excess state again.
7. When the range comparison result is within the range, even in the state of the range comparison interrupt factor flag set (RCINT=1), the state of the continuous detection frequency is initialized (RCOCD =000).
8. Even in the range comparison interrupt factor flag set state (RCINT=1), the range comparison result increments the continuous count detection (RCOCD2) by the upper limit threshold excess.
   However, in the range comparison interruption factor flag set state (RCINT=1), the threshold excess flag (RCOOF) holds the prior value.
9. The range comparison interrupt factor flag is cleared (RCINT=0) because of the range comparison interrupt factor flag clear (RCINT=0).
   Moreover, the hold state of the limit excess flag (RCOOF) is also released.
10. Because the range comparison result continuously reached the continuous detection count specification value (RCOCD =011), the range comparison interrupt factor flag (RCINT) is set to 1.
    Moreover, the threshold excess flag (RCOOF) is set to the threshold excess state when the range comparison interrupt factor flag is set (RCINT=1) and its state is held until the range comparison interrupt factor flag is cleared (RCINT=0).
11. When the range comparison operation is disabled (RCOE=0), the continuous detection count state (RCOCD) is initialized to 000.
    Moreover, neither the range comparison interrupt factor flag (RCINT) nor the threshold excess flag (RCOOF) are cleared because the range comparison operation is disabled (RCOE=0).

However, because the range comparisons of the A/D conversion results are implemented before A/D conversion result is written to FIFO regardless of the scanning conversion and the priority conversion, the range comparison can be executed even when FIFO is in the FULL state.

3.6 Starting DMA

This section explains the DMA transfer processing for FIFO data of A/D converter.

Data stored in the FIFO of the A/D converter can be transferred with the hardware activated DMA transfer using interrupt signals. The required settings and operations are as follows.

This product is compatible with DMA transfers of scan convert FIFO data by DMAC, and scan convert FIFO data and prior convert FIFO data by DSTC.

・The interrupt signal from the A/D converter is connected to the interrupt controller in the initial state. According to the select register setting for DMA transfer requests of interrupt controller and the DREQENB register setting of DSTC, connect the scan convert interrupt signal and prior convert interrupt signal to DMAC/DSTC. Enables interrupts from the A/D converter. (ADCR:SCIE=1, ADCR:PCIE=1)

・Set 0 for the FIFO stage count when the interrupts from the A/D converter are generated (the interrupt request will be generated when the conversion result is stored in the first FIFO stage).

・For DMAC/DSTC side, specify the transfer source addresses for the scan convert FIFO data register (SCFD) and prior conversion FIFO data register (PCFD). In case of DMAC, select the hardware demand transfer for transfer mode. In case of DSTC, select DES0.MODE=1 for transfer mode. For number of transfer, specify the number of data stored in FIFO.

Figure 3-10 shows a timing chart of DMA transfer operations.

After A/D conversion is started, the converted data will be stored in FIFO. Interrupt requests from the A/D converter are generated. By DMAC/DSTC, reading the FIFO data register and writing to the destination are performed, and data transfer is performed. The generated interrupt signals are cleared from the DMAC/DSTC side. (▼mark in this figure) Clearing the interrupt flag (ADCR:SCIF, ADCR:PCIF) from CPU is not required. After transfer operation is completed for the times specified in DMAC/DSTC, the transfer completion notification from DMAC/DSTC can be received.

If DMAC/DSTC processes transfer requests other than those of the A/D converter, note that the start of DMA transfer may get delayed as shown from ▽ to △ in the figure.

Figure 3-10 DMA transfer Operation

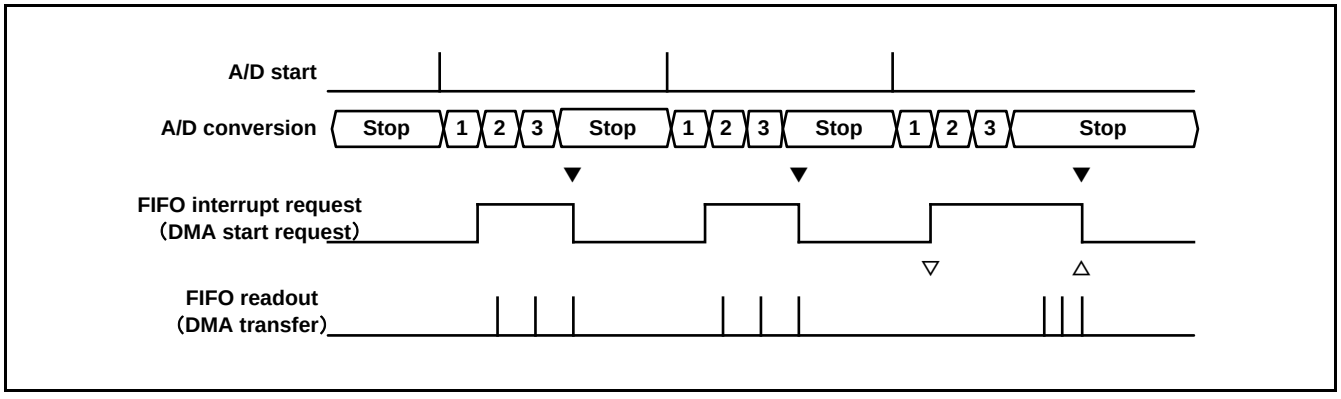

4. Setup procedure Examples

This section provides examples of setup procedures for the 12-bit A/D converter.

4.1. A/D Operation Enable Setup Procedure Example
4.2. Scan Conversion Setup Procedure Example
4.3. Priority Conversion Setup Procedure Example
4.4. Range Comparison Function Setting Example
4.5. Setting Conversion Time

4.1 A/D Operation Enable Setup Procedure Example

This section provides an A/D operation enable setup procedure example.

- Set the period of operation enable state transitions
- Poll the operation enable state

Figure 4-1 A/D Operation Enable Setup Procedure Example

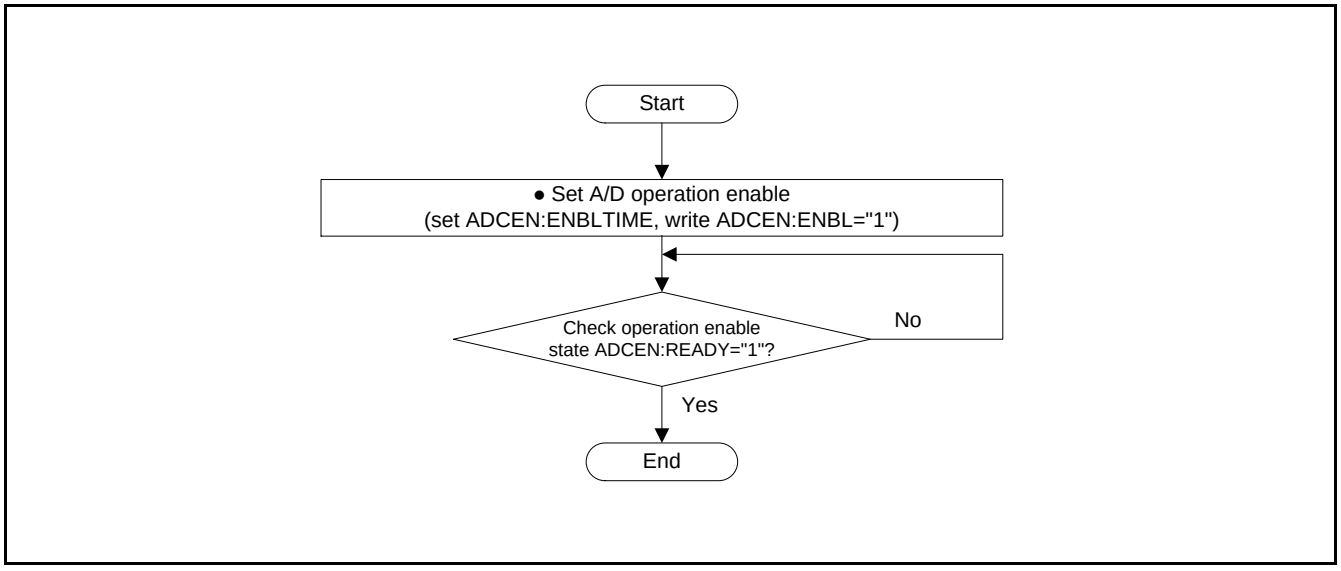

4.2 Scan Conversion Setup Procedure Example

This section provides a scan conversion setup procedure example.

- Scan conversion by software startup
- Set A/D conversion channels to ch.1 and ch.3
- Set different sampling times for ch.1 and ch.3
- Set the clock division ratio
- Read the least significant 16 bits of FIFO data and check data validity by the INVL bit
- After checking that data is valid, read the most significant 16 bits of FIFO data

Figure 4-2 Scan Conversion Setup Procedure Example

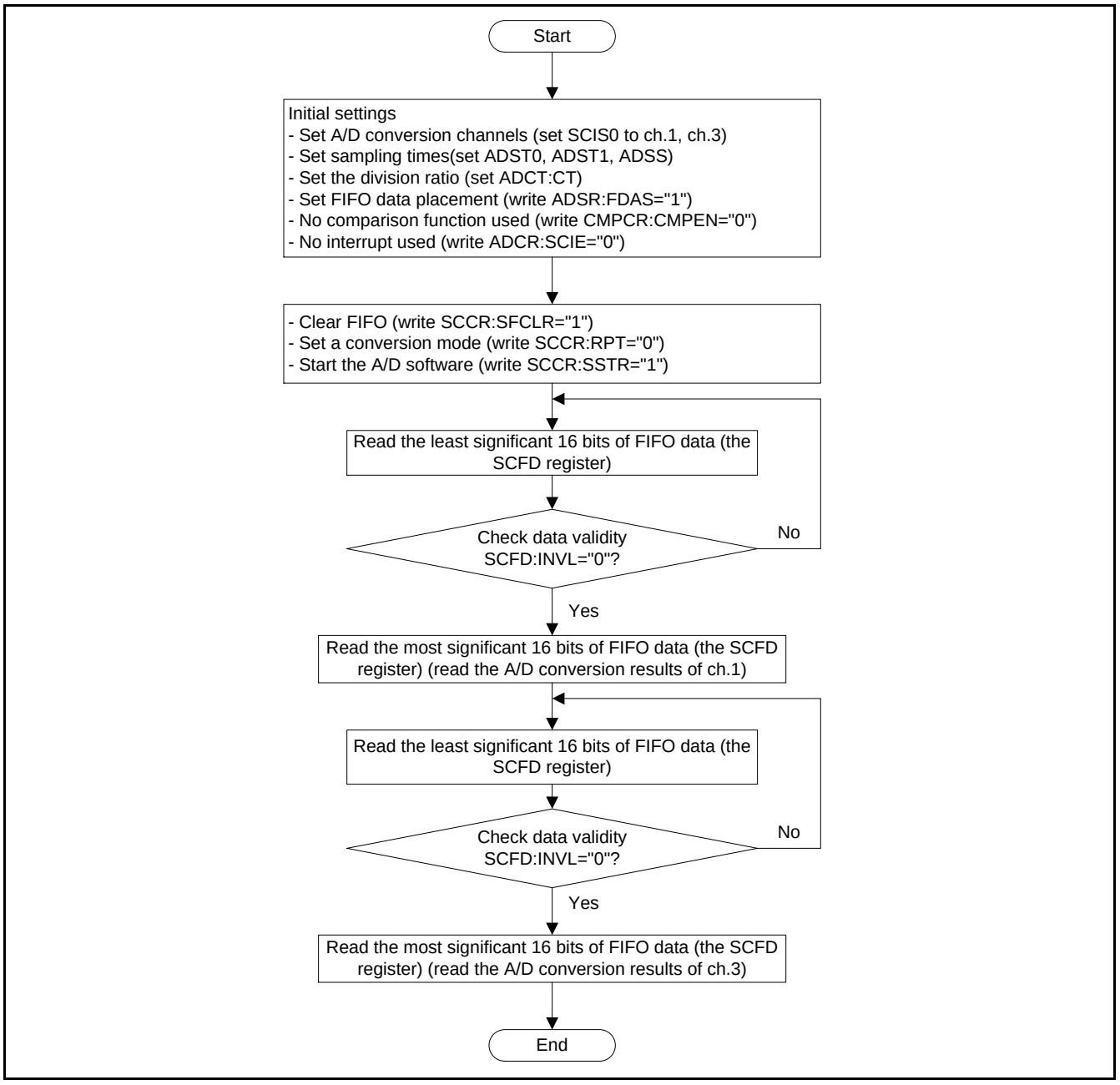

4.3 Priority Conversion Setup Procedure Example

This section provides a priority conversion setup procedure example.

- Priority conversion at priority level 2 by timer start
- Conversion channels are ch.1 and ch.3
- Set different sampling times for ch.1 and ch.3
- Set the clock division ratio
- Read 32 bits of FIFO data by using an interrupt
- Read FIFO by the specified stage count

Figure 4-3 Priority Conversion Setup Procedure Example

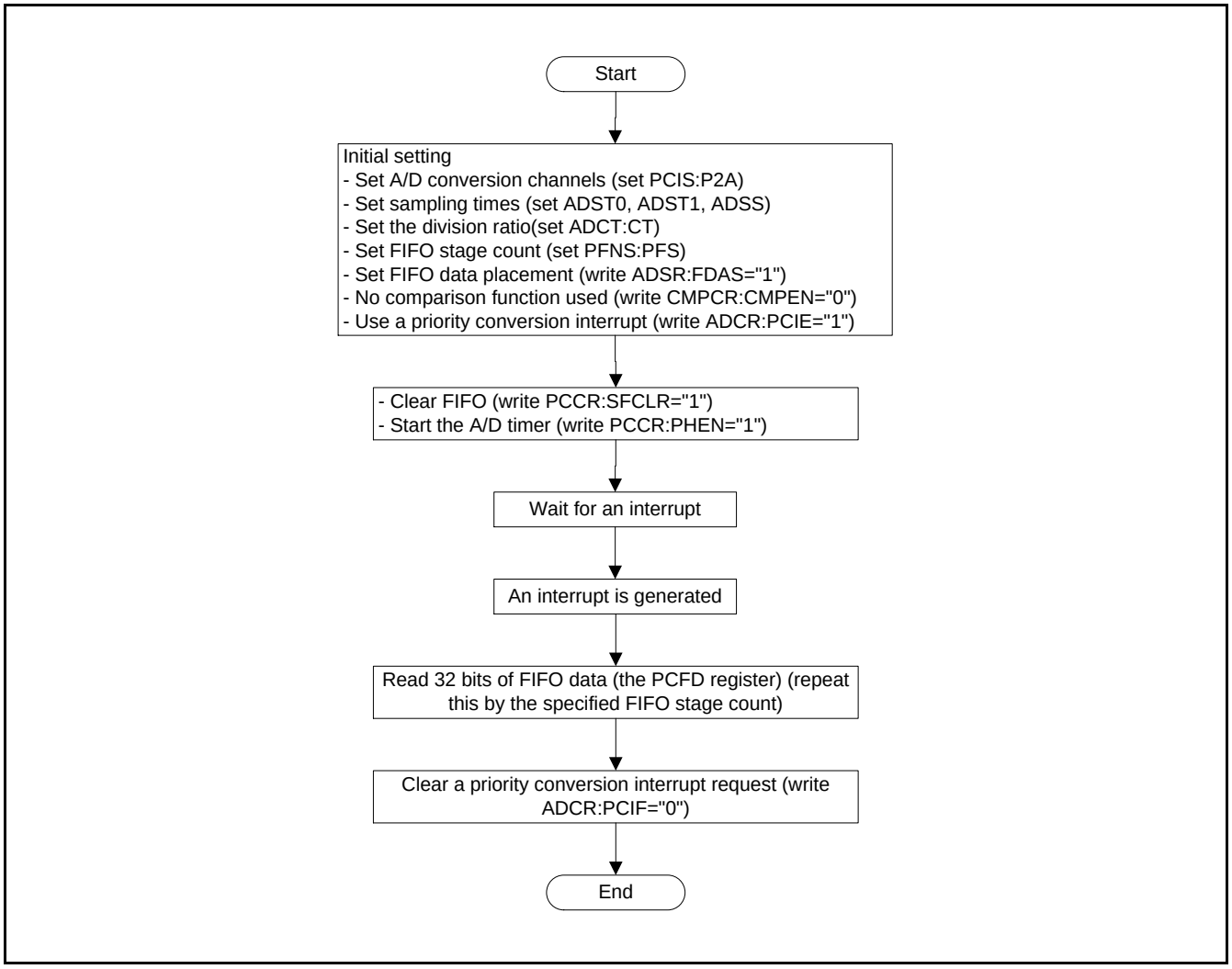

4.4 Range Comparison Function Setting Example

This section shows the example of range comparison function setting procedures.

Figure 4-4 Example of Comparison Function Setting Procedures

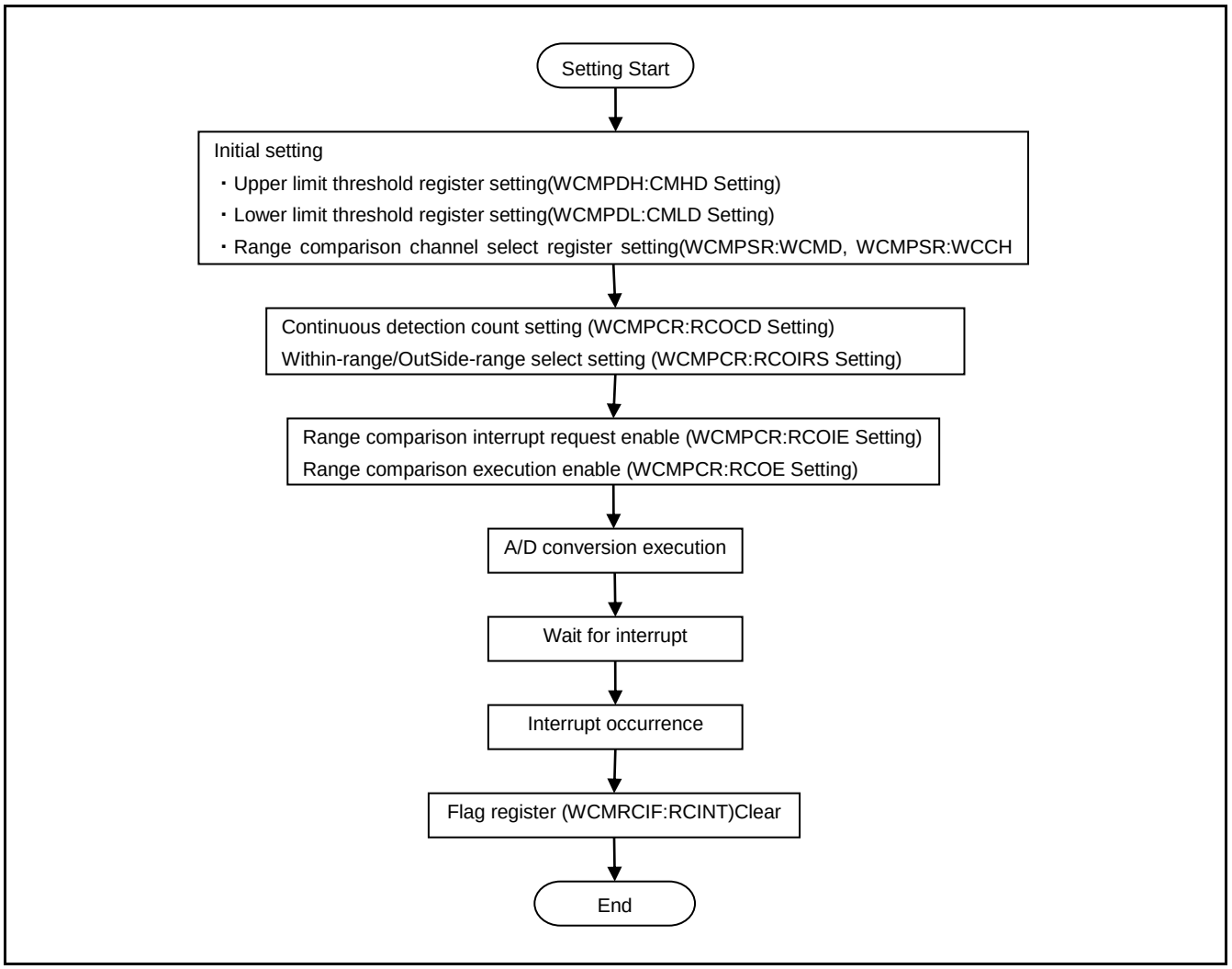

4.5 Setting Conversion Time

The conversion time of the A/D converter is "sampling time" + "comparison time". Two sampling time settings can be applied to each channel. This section explains how to set and calculate the conversion time.

Example of Setting the Sampling Time

A sampling time is set in each of Sampling Time Setup registers 0 and 1 (ADST0 and ADST1). Using Sampling Time Selection Registers (ADSS3 to ADSS0), whether Sampling Time Setup Registers 0 or 1 is used to provide the value can be selected for each channel. This allows you to set different sampling times for channels with different external impedances.

Sampling time = Base clock (HCLK) cycle× Clock division ratio × {(ST set value + 1) × STX setting multiplier + 3}

Notes:

- *For setting the sampling time, refer to the "Electrical Characteristics" in the "Data Sheet" to make sure that an appropriate time should be selected in accordance with an external impedance of an input channel, an analog power supply voltage (AVCC), and a base clock (HCLK) cycle.*
- *When STXx2, STXx1, and STXx0 = 000 (STx4 to STx0 set values multiplied by 1) are set, set STx4 to STx0 to "2" or more ("1" or less must not be set).*

Example of Setting the Comparison Time

The comparison time is set in the Comparison Time Setup register (ADCT).

Comparison time = Compare clock cycle × 14
Compare clock cycle = Base clock (HCLK) cycle × Clock division ratio

Notes:

- *For setting the compare clock cycle, refer to the Electrical Characteristics in the Data Sheet to make sure that an appropriate time should be selected in accordance with an analog power supply voltage (AVCC) and a base clock (HCLK) cycle.*
- *If the sampling time or compare clock cycle fails to meet the electrical characteristics of the A/D converter, the A/D conversion accuracy may be degraded.*

Example of Conversion Time Calculation (when HCLK = 20 MHz (50 ns cycle))

(1) Sampling time

- When ST04 to ST00 = 2, STX02, STX01, and STX00 = 000 (multiplied by 1), and CT7 to CT0=0 (Compare clock division ratio: 2)
- Sampling time = 50 ns × 2 ×{(2+1) × 1 + 3} = 600 ns
  When ST14 to ST10 = 19, STX12, STX11, and STX10 = 001 (multiplied by 4), and CT7 to CT0=0 (Compare clock division ratio: 2)
  Sampling time = 50 ns × 2 ×{(19 + 1) × 4 + 3} = 8300 ns

(2) Comparison time

- When CT7 to CT0 = 0 (Clock division ratio: 2)
  Compare clock cycle = 50 ns × 2 = 100 ns
  Comparison time = 100 ns × 14 = 1400 ns

(3) Conversion time

- By adding (1) and (2) together:
  Conversion time for channels specified with the ADST0 register = 2000 ns
  Conversion time for channels specified with the ADST1 register = 9700 ns

Example of setting register

Table 4-1 Example of Setting Register for Sampling Time and Compare Time

HCLK	CT7~ CT0	STXx2~ STXx0	STx4~ STx0	Sampling Time	Comparison Time	Conversion Time	Compare Clock Cycle
40 MHz	10000000	000	00010	0.15 µs	0.35 µs	0.50 µs	25 ns
40 MHz	00000000	000	00010	0.30 µs	0.70 µs	1.00 µs	50 ns
40 MHz	00000000	000	00011	0.35 µs	0.70 µs	1.05 µs	50 ns
40 MHz	00000000	001	00010	0.75 µs	0.70 µs	1.45 µs	50 ns
40 MHz	00000001	000	00010	0.45 µs	1.05 µs	1.50 µs	50 ns
72 MHz	00000000	000	00010	0.17 µs	0.39 µs	0.56 µs	27.8 ns
72 MHz	00000010	000	00010	0.33 µs	0.78 µs	1.11 µs	55.6 ns
80 MHz	00000000	000	00010	0.15 µs	0.35 µs	0.50 µs	25 ns
80 MHz	00000010	000	00010	0.30 µs	0.70 µs	1.00 µs	50 ns
160 MHz	00000010	000	00010	0.15 µs	0.35 µs	0.50 µs	25 ns
160 MHz	00000110	000	00010	0.30 µs	0.70 µs	1.00 µs	50 ns
180 MHz	00000011	000	00010	0.17 µs	0.39 µs	0.56 µs	27.8 ns
180 MHz	00000111	000	00010	0.30 µs	0.70 µs	1.00 µs	50 ns
200 MHz	00000011	000	00010	0.15 µs	0.35 µs	0.50 µs	25 ns
200 MHz	00001000	000	00010	0.30 µs	0.70 µs	1.00 µs	50 ns

5. Registers

This section explains the configuration and functions of the registers used for the 12-bit A/D converter.

Table 5-1 List of Registers for the 12-bit A/D Converter

Abbreviation	Register name	Reference
ADCR	A/D Control register	5.1
ADSR	A/D Status register	5.2
SCCR	Scan Conversion Control register	5.3
SFNS	Scan Conversion FIFO Stage Count Setup register	5.4
SCFD	Scan Conversion FIFO Data register	5.5
SCIS	Scan Conversion Input Selection register	5.6
PCCR	Priority Conversion Control register	5.7
PFNS	Priority Conversion FIFO Stage Count Setup register	5.8
PCFD	Priority Conversion FIFO Data register	5.9
PCIS	Priority Conversion Input Selection register	5.10
CMPD	A/D Comparison Value Setup register	5.11
CMPCR	A/D Comparison Control register	5.12
ADSS	Sampling Time Selection register	5.13
ADST	Sampling Time Setup register	5.14
ADCT	Comparison Time Setup register	5.15
ADCEN	A/D Operation Enable Setup register	5.16
WCMPDH	Upper Limit Threshold Setting register	5.17
WCMPCR	Range Comparison Control register	5.18
WCMPDL	Lower Limit Threshold Setting register	5.19
WCMPSR	Range Comparison Channel Select register	5.20
WCMRCOT	Range Comparison Threshold Excess Flag register	5.21
WCMRCIF	Range Comparison Flag register	5.22

5.1 A/D Control Register (ADCR)

The A/D Control register (ADCR) performs interrupt flag display and interrupt enable control.

bit	15	14	13	12	11	10	9	8
Field	SCIF	PCIF	CMPIF	Reserved	SCIE	PCIE	CMPIE	OVRIE
Attribute	R/W	R/W	R/W	-	R/W	R/W	R/W	R/W
Initial value	0	0	0	X	0	0	0	0

[bit15] SCIF: Scan conversion interrupt request bit

When conversion values are written up to the stage count specified in the Scan Conversion FIFO Stage Count Setup register (SFNS), this bit is set to 1. The read value of Read-Modify-Write operation is 1 regardless of the bit value.

bit	Description	
	Read	Write
0	Conversion result is not stored.	Clears this bit.
1	Conversion result is stored.	No effect.

[bit14] PCIF: Priority conversion interrupt request bit

When conversion values are written up to the stage specified in the Priority Conversion FIFO Stage Count Setup register (PFNS), this bit is set to 1. The read value of Read-Modify-Write operation is 1 regardless of the bit value.

bit	Description	
	Read	Write
0	Conversion result is not stored.	Clears this bit.
1	Conversion result is stored.	No effect.

[bit13] CMPIF: Conversion result comparison interrupt request bit

When the condition set in the A/D Comparison Value Setup register (CMPD) or A/D Comparison Control register (CMPCR) is satisfied during the operation of the A/D conversion result comparison function, this bit is set to 1. The read value of Read-Modify-Write operation is 1 regardless of the bit value.

bit	Description	
	Read	Write
0	Specified condition is not satisfied.	Clears this bit.
1	Specified condition is satisfied.	No effect.

[bit12] Reserved: Reserved bit

Writing has no effect on operation.
The read value is undefined.

[bit11] SCIE: Scan conversion interrupt enable bit

This bit controls the interrupt request of SCIF. When the SCIE bit is enabled, and the SCIF bit is set, an interrupt request to the CPU is generated.

bit	Description
0	Interrupt request disable
1	Interrupt request enable

[bit10] PCIE: Priority conversion interrupt enable bit

This bit controls the interrupt request of PCIF. When the PCIE bit is enabled, and the PCIF bit is set, an interrupt request to the CPU is generated.

bit	Description
0	Interrupt request disable
1	Interrupt request enable

[bit9] CMPIE: Conversion result comparison interrupt enable bit

This bit controls the interrupt request of CMPIF. When the CMPIE bit is enabled and the CMPIF bit is set, an interrupt request to the CPU is generated.

bit	Description
0	Interrupt request disable
1	Interrupt request enable

[bit8] OVRIE: FIFO overrun interrupt enable bit

This bit controls the interrupt request of the SOVR bit in the SCCR register or the POVR bit in the PCCR register. When the OVRIE bit is enabled, and the SOVR or POVR bit is set, an interrupt request to the CPU is generated.

bit	Description
0	Interrupt request disable
1	Interrupt request enable

5.2 A/D Status Register (ADSR)

The A/D Status register (ADSR) displays scan and priority conversion statuses.

bit	7	6	5	4	3	2	1	0
Field	ADSTP	FDAS	Reserved			PCNS	PCS	SCS
Attribute	R/W	R/W	-			R	R	R
Initial value	0	0	XXX			0	0	0

[bit7] ADSTP: A/D conversion forced stop bit

Setting the ADSTP bit to 1 stops the A/D conversion operation forcibly (both scan and priority conversion operations are stopped). Forced stop of A/D conversion initializes the PCNS, PCS, and SCS bits in the ADSR register to 0. However, other register bits are not reset.

bit	Description	
	Read	Write
0	The value is always "0".	No effect.
1		Stops the conversion operation forcibly.

[bit6] FDAS: FIFO data placement selection bit

Setting the FDAS bit to 1 shifts the Scan Conversion FIFO Data register (SCFD) and Priority Conversion FIFO Data register (PCFD) conversion result values by 4 bits to the LSB side, placing them in bit27:16. The position of the lower 16-bit of the FIFO data register does not change.

bit	Description
0	Places conversion result on the MSB side.
1	Places conversion result on the LSB side.

[bit5:3] Reserved: Reserved bits

Writing has no effect on operation.
The read value is undefined.

[bit2] PCNS: Priority conversion pending flag

This flag indicates that conversion at priority level 2 (software/timer) is pending. This flag is set when priority conversion at priority level 2 (software/timer) is started while priority conversion at priority level 1 (external trigger start) is performed or when conversion at priority level 1 is started while priority conversion at priority level 2 is performed. Writing is ignored.

bit	Description
0	Priority level 2 conversion is not pending.
1	Priority level 2 conversion is pending.

[bit1] PCS: Priority conversion status flag

This flag indicates that priority A/D conversion is in progress. This flag is set while priority conversion at priority level 1 or 2 is performed. Writing is ignored.

bit	Description
0	Priority conversion is stopped.
1	Priority conversion is in progress.

[bit0] SCS: Scan conversion status flag

This flag indicates that scan A/D conversion is in progress. Writing is ignored.

bit	Description
0	Scan conversion is stopped.
1	Scan conversion is in progress.

5.3 Scan Conversion Control Register (SCCR)

The Scan Conversion Control register (SCCR) controls the scan conversion mode.

bit	15	14	13	12	11	10	9	8
Field	SEMP	SFUL	SOVR	SFCLR	Reserved	RPT	SHEN	SSTR
Attribute	R	R	R/W	R/W	-	R/W	R/W	R/W
Initial value	1	0	0	0	X	0	0	0

[bit15] SEMP: Scan conversion FIFO empty bit

This bit is set when the FIFO goes to the empty state. When conversion data is written in the Scan Conversion FIFO Data register (SCFD), this bit is set to 0. Writing is ignored.

bit	Description
0	Data remains in FIFO.
1	FIFO is empty.

[bit14] SFUL: Scan conversion FIFO full bit

This bit is set when the FIFO goes to full state. When SFCLR is set to 1 or the Scan Conversion FIFO Data register (SCFD) is read, this bit is set to 0. Writing is ignored.

bit	Description
0	Data can be input to FIFO.
1	FIFO is full.

[bit13] SOVR: Scan conversion overrun flag

This bit is set when an attempt to write data to a full FIFO is made (conversion data in a full FIFO is not overwritten). The read value of Read-Modify-Write operation is 1 regardless of the bit value. When the OVRIE bit in the ADCR register is 1 and the SOVR bit is 1, an interrupt is generated to the CPU.

bit	Description	
	Read	Write
0	No overrun has occurred.	Clears this bit.
1	Overrun has occurred.	No effect.

[bit12] SFCLR: Scan conversion FIFO clear bit

Setting this bit to 1 clears the scan conversion FIFO. The FIFO becomes empty and the SEMP bit is set to 1.

bit	Description	
	Read	Write
0	The value is always "0".	No effect.
1		Clears FIFO.

[bit11] Reserved: Reserved bit

Writing has no effect on operation.
The read value is undefined.

[bit10] RPT: Scan conversion repeat bit

Setting this bit to 1 places the converter in the repeat mode. When the conversion of all analog input channels selected in the Scan Conversion Input Selection register (SCIS) is completed, the conversion is started again.

Setting the RPT bit to 0 ends the repeat conversion. The operation stops when the conversion of the analog input channels selected in the SCIS bit is completed.

Setting the RPT bit to 1 must be performed while scan conversion is stopped (ADSR: SCS= 0). (Setting the SSTR bit to 1 may be performed simultaneously with setting the RPT bit to 1.)

bit	Description
0	Single conversion mode
1	Repeat conversion mode

Note:

- *The repeat transfer cannot be stooped immediately even when PRT bit is set to 0.*
  Writing data to FIFO will be continued until the transfer is stopped.
  Note that FIFO data and Status bits (FIFO full bit etc.) continue to change until the transfer is stopped.

[bit9] SHEN: Scan conversion timer start enable bit

Set this bit to 1 to start scan conversion using a rising edge from a timer. Software startup (SSTR = 1) is valid even when this bit is set to 1.

bit	Description
0	Timer start disable
1	Timer start enable

[bit8] SSTR: Scan conversion start bit

Setting this bit to 1 starts A/D conversion. Setting this bit to 1 again during conversion stops the ongoing conversion immediately and restarts the conversion.

bit	Description	
	Read	Write
0	The value is always "0".	No effect.
1		Starts conversion or restarts the conversion (during conversion).

Note:

- *If a startup by a timer occurs simultaneously with the setting of the SSTR bit to 1, the setting of the SSTR bit to 1 takes preference and the startup by the timer is ignored.*

5.4 Scan Conversion FIFO Stage Count Setup Register (SFNS)

The Scan Conversion FIFO Stage Count Setup register (SFNS) sets up the generation of interrupt requests in scan conversion. When the specified count of FIFO stages store A/D conversion data, the interrupt request bit (SCIF) is set.

bit	7	6	5	4	3	2	1	0
Field	Reserved				SFS[3:0]			
Attribute	-				R/W			
Initial value	XXXX				0000			

[bit7:4] Reserved: Reserved bits

Writing has no effect on operation.

The read value is undefined.

[bit3:0] SFS[3:0]: Scan conversion FIFO stage count setting bits

When A/D conversion data for the FIFO stage count (N + 1) set in SFS[3:0] bits are written, the interrupt request flag (SCIF) is set to 1.

bit3:0	Description
0000	Generates an interrupt request when conversion result is stored in the first FIFO stage.
0001	Generates an interrupt request when conversion result is stored in the second FIFO stage.
0010	Generates an interrupt request when conversion result is stored in the third FIFO stage.
...	...
1101	Generates an interrupt request when conversion result is stored in the 14th FIFO stage.
1110	Generates an interrupt request when conversion result is stored in the 15th FIFO stage.
1111	Generates an interrupt request when conversion result is stored in the 16th FIFO stage.

5.5 Scan Conversion FIFO Data Register (SCFD)

The Scan Conversion FIFO Data register (SCFD) consists of 16 FIFO stages and stores analog conversion results. Data can be retrieved sequentially by reading the register.

bit	31	30	29	28	27	26	25	24	23	22	21	20	19	18	17	16
Field	SD 11	SD 10	SD 9	SD 8	SD 7	SD 6	SD 5	SD 4	SD 3	SD 2	SD 1	SD 0	Reserved			
Attribute	R												R			
Initial value	0xXXX												XXXX			

bit	15	14	13	12	11	10	9	8	7	6	5	4	3	2	1	0
Field	Reserved			INVL	Reserved		RS 1	RS 0	Reserved			SC 4	SC 3	SC 2	SC 1	SC 0
Attribute	R			R	R		R		R					R		
Initial value	XXX			1	XX		XX		XXX					XXXXX		

[bit31:20] SD11 to SD0: Scan conversion result

The result of 12-bit scan A/D conversion is written.

[bit19:13] Reserved: Reserved bits

The read value is undefined.

[bit12] INVL : A/D conversion result disable bit

This bit is set when this register value is invalid.

bit	Description
0	This register value is valid
1	This register value is invalid

[bit11:10] Reserved: Reserved bits

The read value is undefined.

[bit9:8] RS1, RS0: Scan conversion start factor

The start factor of the scan conversion corresponding to this register value is shown.

bit9:8	Description
01	Software start
10	Timer start

[bit7:5] Reserved: Reserved bits

The read value is undefined.

[bit4:0] SC4 to SC0: Conversion input channel bits

The analog input channels corresponding to the conversion result written in SD11 to SD0 are written. Settings for channels not defined in the product specifications are not written. See the specified number of the analog input channels in the Data Sheet of each product.

bit4:0	Description
00000	ch.0
00001	ch.1
00010	ch.2
...	...
11101	ch.29
11110	ch.30
11111	ch.31

Notes:

- *This register has different bit configurations depending on the FDAS bit setting in the A/D Status register (ADSR). When the FDAS bit is 1, see 3.3.6 Bit placement Selection for FIFO Data Registers.*
- *To perform a byte access to this register, read the most significant byte (bit31:24) to shift the FIFO data. Reading the other bytes (bit23:16, bit15:8, bit7:0) does not shift FIFO. To perform a half byte access to this register, read the most significant half byte (bit 31:16) to shift the FIFO data. Reading the other byte (bit15:0) does not shift FIFO. Performing a word access to this register shifts FIFO.*
- *If software and a timer are started simultaneously, 0b11 may be read from the RS[1:0] bits.*

5.6 Scan Conversion Input Selection Register (SCIS)

The Scan Conversion Input Selection register (SCIS) is used to select analog input channels for which scan conversion is performed. Any channels can be selected from multiple analog inputs. The selected channels are converted in ascending order of channel number.

SCIS3 (most significant byte: AN31 to AN24) and SCIS2 (least significant byte: AN23 to AN16)

bit	15	14	13	12	11	10	9	8	7	6	5	4	3	2	1	0
Field	AN 31	AN 30	AN 29	AN 28	AN 27	AN 26	AN 25	AN 24	AN 23	AN 22	AN 21	AN 20	AN 19	AN 18	AN 17	AN 16
Attribute	R/W															
Initial value	0x00															

[bit15:0] AN31 to AN16: Analog input selection bits

When these bits are set to 1, the corresponding channels are selected for analog conversion.

SCIS1 (most significant byte: AN15 to AN8) and SCIS0 (least significant byte: AN7 to AN0)

bit	15	14	13	12	11	10	9	8	7	6	5	4	3	2	1	0
Field	AN 15	AN 14	AN 13	AN 12	AN 11	AN 10	AN 9	AN 8	AN 7	AN 6	AN 5	AN 4	AN 3	AN 2	AN 1	AN 0
Attribute	R/W															
Initial value	0x00															

[bit15:0] AN15 to AN0: Analog input selection bits

When these bits are set to 1, the corresponding channels are selected for analog conversion.

Notes:

- *It is not allowed to change the channels during A/D conversion. Be sure to set SCIS3 to SCIS0 while the A/D conversion is stopped. A/D conversion is not period of waiting start factors. It is allowed to change the channel during no start factors period.*
- *It is not possible to set 1 in the bit corresponding to a channel that is not defined in the product specifications. See the specified number of the analog input channels in the Data Sheet of each product.*

Example of Scan Conversion Order

The selected channels are converted in ascending order of channel number.

Example: When the AN1, AN3, AN5, and AN23 bits are set to 1, the analog conversion proceeds from ch.1, ch.3, ch.5, and to ch.23.

5.7 Priority Conversion Control Register (PCCR)

The Priority Conversion Control register (PCCR) controls the priority conversion mode.

Priority conversion can be performed even while scan conversion is being performed.

In addition, different priority levels (two levels) can be given to priority conversion processes.

bit	15	14	13	12	11	10	9	8
Field	PEMP	PFUL	POVR	PFCLR	ESCE	PEEN	PHEN	PSTR
Attribute	R	R	R/W	R/W	R/W	R/W	R/W	R/W
Initial value	1	0	0	0	0	0	0	0

[bit15] PEMP: Priority conversion FIFO empty bit

This bit is set when the FIFO goes to the empty state. When conversion data is written in the Priority Conversion FIFO Data register (PCFD), this bit is set to "0". Writing is ignored.

bit	Description
0	Data remains in the FIFO.
1	The FIFO is empty.

[bit14] PFUL: Priority conversion FIFO full bit

This bit is set when FIFO goes to full state. When PFCLR bit is set to "1" or the Priority Conversion FIFO Data register (PCFD) is read, this bit is set to 0. Writing is ignored.

bit	Description
0	Data can be input to the FIFO.
1	The FIFO is full.

[bit13] POVR: Priority conversion overrun flag

This bit is set when an attempt to write data to a full FIFO is made (conversion data in a full FIFO is not overwritten). The read value of Read-Modify-Write operation is 1 regardless of the bit value. When the OVRIE bit in the ADCR register is 1, an interrupt is generated to the CPU if the POVR bit is 1.

bit	Description	
	Read	Write
0	No overrun has occurred.	Clears this bit.
1	Overrun has occurred.	No effect on operation.

[bit12] PFCLR: Priority conversion FIFO clear bit

Setting this bit to 1 clears the priority conversion FIFO. FIFO becomes empty and the PEMP bit is set to 1.

bit	Description	
	Read	Write
0	The value is always "0".	No effect on operation
1		Clears FIFO.

[bit11] ESCE: External trigger analog input selection bit

This bit selects whether the external trigger analog input is selected with the P1A[2:0] bits in the Priority Conversion Input Selection register (PCIS) or the external input pin ECS[2:0] bits.

bit	Description
0	The external trigger analog inputs are selected with P1A[2:0].
1	The external trigger analog inputs are selected with an external input.

Notes:

- *It is not allowed to change the setting of the ESCE bit during A/D conversion. To change the setting, make sure the A/D conversion is stopped. A/D conversion is not period of waiting start factors. It is allowed to change the setting of the ESCE bit during no start factors period.*
- *If channel selection with external pins ECS[2:0] cannot be used due to the product specifications, be sure to set the ESCE bit to 0.*

[bit10] PEEN: Priority conversion external start enable bit

Set this bit to 1 to start priority conversion using a falling edge of an external trigger pin input. Conversion started with an external trigger has priority level 1 (highest priority).

bit	Description
0	External trigger start disable
1	External trigger start enable

[bit9] PHEN: Priority conversion timer start enable bit

Set this bit to 1 to start priority conversion using a rising edge from a timer. Software startup (PSTR = 1) is valid even when this bit is set to 1. Conversion started with an external trigger has priority level 2 (lower priority than level 1).

bit	Description
0	Timer start disable
1	Timer start enable

[bit8] PSTR: Priority conversion start bit

Setting this bit to 1 starts A/D conversion. Conversion started with this bit has priority level 2 (lower than priority level 1). It is not possible to restart the conversion started with this bit.

bit	Description	
	Read	Write
0	The value is always "0".	No effect on operation
1		Starts priority conversion.

5.8 Priority Conversion FIFO Stage Count Setup Register (PFNS)

The Priority Conversion FIFO Stage Count Setup register (PFNS) sets up the generation of interrupt requests in priority conversion. When the specified count of FIFO stages store A/D conversion data, the interrupt request bit (PCIF) is set.

bit	7	6	5	4	3	2	1	0
Field	Reserved		TEST[1:0]		Reserved		PFS[1:0]	
Attribute	-		R		-		R/W	
Initial value	XX		XX		XX		00	

[bit7:6] Reserved: Reserved bits

Writing has no effect on operation.
The read value is undefined.

[bit5:4] TEST[1:0]: Test bits

Write	Has no effect on operation.
Read	The value is undefined.

[bit3:2] Reserved: Reserved bits

Writing has no effect on operation.
The read value is undefined.

[bit1:0] PFS[1:0]: Priority conversion FIFO stage count setting bits

When A/D conversion data for the FIFO stage count (N + 1) set in PFS[1:0] is written, the interrupt request flag (PCIF) is set to 1.

bit1:0	Description
00	Generates an interrupt request when conversion result is stored in the first FIFO stage.
01	Generates an interrupt request when conversion result is stored in the second FIFO stage.
10	Generates an interrupt request when conversion result is stored in the third FIFO stage.
11	Generates an interrupt request when conversion result is stored in the fourth FIFO stage.

5.9 Priority Conversion FIFO Data Register (PCFD)

The Priority Conversion FIFO Data register (PCFD) consists of four FIFO stages and stores analog conversion results. Data can be retrieved sequentially by reading the register.

bit	31	30	29	28	27	26	25	24	23	22	21	20	19	18	17	16
Field	PD11	PD10	PD9	PD8	PD7	PD6	PD5	PD4	PD3	PD2	PD1	PD0	Reserved			
Attribute	R												R			
Initial value	0xXXX												XXXX			

bit	15	14	13	12	11	10	9	8	7	6	5	4	3	2	1	0
Field	Reserved			INVL	Reserved	RS2	RS1	RS0	Reserved			PC4	PC3	PC2	PC1	PC0
Attribute	R			R	R	R			R			R				
Initial value	XXX			1	X	XXX			XXX			XXXXX				

[bit31:20] PD11 to PD0: Priority conversion result

The result of 12-bit priority A/D conversion is written.

[bit19:13] Reserved: Reserved bits

The read value is undefined.

[bit12] INVL: A/D conversion result disable bit

This bit is set when this register value is invalid.

bit	Description
0	This register value is valid
1	This register value is invalid

[bit11] Reserved: Reserved bit

The read value is undefined.

[bit10:8] RS2 to RS0: Scan conversion start factor

The start factor of the priority conversion corresponding to this register value is shown.

bit10:8	Description
001	Software start (priority level 2)
010	Timer start (priority level 2)
100	External trigger (priority level 1)

[bit7:5] Reserved: Reserved bits

The read value is undefined.

[bit4:0] PC4 to PC0: Conversion input channel bits

The analog input channels corresponding to the conversion result written in PD11 to PD0 are written. Settings for channels not defined in the product specifications are not written. See the specified number of the analog input channels in the "Data Sheet" of each product.

bit4:0	Description
00000	ch.0
00001	ch.1
00010	ch.2
...	...
11101	ch.29
11110	ch.30
11111	ch.31

Notes:

- *This register has different bit configurations depending on the FDAS bit setting in the A/D Status register (ADSR). When the FDAS bit is 1, see 3.3.6 Bit placement Selection for FIFO Data Registers.*
- *To perform a byte access to this register, read the most significant byte (bit31:24) to shift the FIFO data. Reading the other bytes (bit23:16, bit15:8, bit7:0) does not shift FIFO. To perform a half word access to this register, read the most significant half word (bit31:16) to shift FIFO. Reading the other byte (bit15:0) does not shift FIFO. Performing a word access to this register shifts FIFO.*
- *If software and a timer are started simultaneously, 0b011 may be read from the RS[2:0] bits.*
- *Conversion started with an external trigger can be performed only when the analog input channel is between ch.0 to ch.7.*

5.10 Priority Conversion Input Selection Register (PCIS)

The Priority Conversion Input Selection register (PCIS) is used to select the analog input channels for which priority conversion is performed. For software or timer start at priority level 2, only one channel can be selected from multiple analog input channels. For external trigger start at priority level 1, one channel can be selected from eight channels (ch.0 to ch.7).

bit	7	6	5	4	3	2	1	0
Field	P2A[4:0]					P1A[2:0]		
Attribute	R/W					R/W		
Initial value	00000					000		

[bit7:3] P2A[4:0]: Priority level 2 analog input selection

This bit specifies the analog input channel for a start at priority level 2 (software/timer). It can be selected from all channels. It is not possible to set the channel that is not defined in the product specifications. See the specified number of the analog input channels in the "Data Sheet" of each product.

bit7:3	Description
00000	ch.0
00001	ch.1
00010	ch.2
...	...
11101	ch.29
11110	ch.30
11111	ch.31

[bit2:0] P1A[2:0]: Priority level 1 analog input selection

This bit specifies the analog input channel for a start at priority level 1 (external trigger). It can be selected from eight channels (ch.0 to ch.7).

bit2:0	Description
000	ch.0
001	ch.1
010	ch.2
...	...
101	ch.5
110	ch.6
111	ch.7

Note:

- *It is not allowed to change the channel during A/D conversion. Be sure to write a value to P1A or P2A when the A/D conversion is stopped. A/D conversion is not period of waiting start factors. It is allowed to change the channel during no start factors period.*

5.11 A/D Comparison Value Setup Register (CMPD)

The A/D Comparison Value Setup register (CMPD) sets the value to be compared with the A/D conversion result. When the conditions set in both this register and the A/D Comparison Control register (CMPCR) are satisfied, the conversion result comparison interrupt request bit (CMPIF) in the A/D Control register (ADCR) is set.

bit	31	30	29	28	27	26	25	24
Field	CMAD11	CMAD10	CMAD9	CMAD8	CMAD7	CMAD6	CMAD5	CMAD4
Attribute	R/W	R/W	R/W	R/W	R/W	R/W	R/W	R/W
Initial value	0	0	0	0	0	0	0	0

bit	23	22	21	20	19	18	17	16
Field	CMAD3	CMAD2	Reserved					
Attribute	R/W	R/W	-					
Initial value	0	0	XXXXXX					

[bit31:22] CMAD11 to CMAD2: A/D conversion compare value setting bits

These bits set the value to be compared with the A/D conversion result.

The most significant 10 bits (bit11:2) of the A/D conversion result are compared with the value in this register (CMAD11 to CMAD2). The least significant two bits (bit1:0) of the A/D conversion result are not compared.

[bit21:16] Reserved: Reserved bits

The read value is undefined.

5.12 A/D Comparison Control Register (CMPCR)

The A/D Comparison Control register (CMPCR) controls the A/D comparison function. When the converted value is compared with the value in the A/D Comparison Value Setup register (CMPD) and the comparison condition in this register is satisfied, the conversion result comparison interrupt request bit (CMPIF) in the A/D Control register (ADCR) is set.

bit	7	6	5	4	3	2	1	0
Field	CMPEN	CMD1	CMD0	CCH[4:0]				
Attribute	R/W	R/W	R/W	R/W				
Initial value	0	0	0	00000				

[bit7] CMPEN: Conversion result comparison function operation enable bit

This bit enables the operation of the A/D comparison function.

bit	Description
0	Stops the comparison function operation.
1	Enables the comparison function operation.

[bit6] CMD1: Comparison mode 1

This bit sets the condition for generating a conversion interrupt request.

bit	Description
0	Generates an interrupt request when the most significant 10 bits (bit11:2) of the A/D conversion result is smaller than the CMPD set value.
1	Generates an interrupt request when the most significant 10 bits (bit11:2) of the A/D conversion result is equal to or greater than the CMPD set value.

[bit5] CMD0: Comparison mode 0

This bit selects the comparison target. When this bit is 1, the setting of CCH[4:0] is invalid.

bit	Description
0	Compares the conversion result of the channel set in CCH[4:0].
1	Compares the conversion results of all channels.

[bit4:0] CCH[4:0]: Comparison target analog input channel

This bit sets the analog channel to be compared. When the CMD0 bit is 1, setting of this bit is invalid. It is not possible to set the channel that is not defined in the product specifications. See the specified number of the analog input channels in the "Data Sheet" of each product.

bit4:0	Description
00000	ch.0
00001	ch.1
00010	ch.2
...	...
11101	ch.29
11110	ch.30
11111	ch.31

5.13 Sampling Time Selection Register (ADSS)

The Sampling Time Selection register (ADSS3 to ADSS0) allows you to set the sampling time for each bit. Which of the sampling times set in Sampling Time Setup registers 0 and 1 (ADST0 and ADST1) is used is specified in this register.

ADSS3 (most significant byte: TS31 to TS24) and ADSS2 (least significant byte: TS23 to TS16)

bit	15	14	13	12	11	10	9	8	7	6	5	4	3	2	1	0
Field	TS31	TS30	TS29	TS28	TS27	TS26	TS25	TS24	TS23	TS22	TS21	TS20	TS19	TS18	TS17	TS16
Attribute	R/W															
Initial value	0x0000															

[bit15:0] TS31 to TS16: Sampling time selection bits

Set the sampling time specified in the Sampling Time Setup register (ADST) for the corresponding channel. Setting 0 specifies the time set in ADST0 and setting 1 specifies the time set in ADST1. TS31 to TS16 correspond respectively to ch.31 to ch.16.

ADSS1 (most significant byte: TS15 to TS8) and ADSS0 (least significant byte: TS7 to TS0)

bit	15	14	13	12	11	10	9	8	7	6	5	4	3	2	1	0
Field	TS15	TS14	TS13	TS12	TS11	TS10	TS9	TS8	TS7	TS6	TS5	TS4	TS3	TS2	TS1	TS0
Attribute	R/W															
Initial value	0x0000															

[bit15:0] TS15 to TS0: Sampling time selection bits

Set the sampling time specified in the Sampling Time Setup register (ADST) for the corresponding channel. Setting 0 specifies the time set in ADST0 and setting "1" specifies the time set in ADST1. TS15 to TS0 correspond respectively to ch.15 to ch.0.

Notes:

- *It is not allowed to write to the ADSS register during A/D conversion. A/D conversion is not period of waiting start factors. It is allowed to write to the ADSS register during no start factors period.*
- *It is not possible to set 1 in the bit corresponding to a channel that is not defined in the product specifications. See the specified number of the analog input channels in the "Data Sheet" of each product.*

5.14 Sampling Time Setup Register (ADST)

Sampling Time Setup registers 0 and 1 (ADST0 and ADST1) set the sampling times for A/D conversion. ADST0 and ADST1 are provided for setting two sampling times, and which one is used is selected in the Sampling Time Selection register (ADSS3 to ADSS0).

ADST0 (most significant byte)

bit	15	14	13	12	11	10	9	8
Field	STX02	STX01	STX00	ST04	ST03	ST02	ST01	ST00
Attribute	R/W	R/W	R/W	R/W	R/W	R/W	R/W	R/W
Initial value	0	0	0	1	0	0	0	0

[bit15:13] STX02 to STX00: Sampling time N times setting bits

These bits multiply the sampling time set values in the ST04 to ST00 bits by N.

bit15	bit14	bit13	Description
0	0	0	Set value × 1 (Initial value)
0	0	1	Set value × 4
0	1	0	Set value × 8
0	1	1	Set value × 16
1	0	0	Set value × 32
1	0	1	Set value × 64
1	1	0	Set value × 128
1	1	1	Set value × 256

[bit12:8] ST04 to ST00: Sampling time setting bits

These bit set the sampling time for A/D conversion.

Sampling time = HCLK cycle × Clock division ratio × {(ST set value + 1) × STX setting multiplier + 3}

Example: When ST04 to ST00 = 9, STX02, STX01, and STX00 = 001 (multiplied by 4),
CT7 to CT0=0x00 (Clock frequency division ratio: 2), and HCLK = 20 MHz (50 ns),
Sampling time = 50 ns × 2 ×{(9 + 1) × 4 + 3} = 4300ns

Notes:

- *It is not allowed to write to the ADST0 register during A/D conversion. A/D conversion is not period of waiting start factors. It is allowed to write to the ADST0 register during no start factors period.*
- *For setting the sampling time, refer to the "Electrical Characteristics" in the "Data Sheet" to make sure that an appropriate time should be selected in accordance with an external impedance of an input channel, an analog power supply voltage (AVCC), and a base clock (HCLK) cycle.*
- *When STX02, STX01, and STX00 = 000 (ST04 to ST00 set values multiplied by 1) are set, set ST04 to ST00 to 2 or more (1 or less must not be set).*

ADST1 (least significant byte)

bit	7	6	5	4	3	2	1	0
Field	STX12	STX11	STX10	ST14	ST13	ST12	ST11	ST10
Attribute	R/W	R/W	R/W	R/W	R/W	R/W	R/W	R/W
Initial value	0	0	0	1	0	0	0	0

[bit7:5] STX12 to STX10: Sampling time N times setting bits

These bits multiply the sampling time set values in the ST14 to ST10 bits by N.

bit7	bit6	bit5	Description
0	0	0	Set value × 1(initial value)
0	0	1	Set value × 4
0	1	0	Set value × 8
0	1	1	Set value × 16
1	0	0	Set value × 32
1	0	1	Set value × 64
1	1	0	Set value × 128
1	1	1	Set value × 256

[bit4:0] ST14 to ST10: Sampling time setting bits

These bit set the sampling time for A/D conversion.

Sampling time = HCLK cycle × Clock division ratio × {(ST set value + 1) × STX setting multiplier + 3}

Example: When ST14 to ST10 = 9, STX12, STX11, and STX10 = 001 (multiplied by 4),
CT7 to CT0=0x00 (Clock frequency division ratio: 2), and HCLK = 20 MHz (50 ns),
Sampling time = 50 ns × 2 × {(9 + 1) × 4 + 3} = 4300ns

Notes:

- *It is not allowed to write to the ADST1 register during A/D conversion. A/D conversion is not period of waiting start factors. It is allowed to write to the ADST1 register during no start factors period.*
- *For setting the sampling time, refer to the Electrical Characteristics in the Data Sheet to make sure that an appropriate time should be selected in accordance with an external impedance of an input channel, an analog power supply voltage (AVCC), and a base clock (HCLK) cycle.*
- *When STX12, STX11, and STX10 = 000 (ST14 to ST10 set values multiplied by 1) are set, set ST14 to ST10 to 2 or more (1 or less must not be set).*

5.15 Frequency Division Ratio Setup Register (ADCT)

The Frequency Division Ratio Setup register (ADCT) sets the clock frequency division ratio, which is part of the A/D conversion time.

bit	7	6	5	4	3	2	1	0
Field	CT7	CT6	CT5	CT4	CT3	CT2	CT1	CT0
Attribute	R/W	R/W	R/W	R/W	R/W	R/W	R/W	R/W
Initial value	0	0	0	0	0	1	1	1

[bit7:0] CT7 to CT0: Frequency division ratio setting bits

These bits set the division ratio of the HCLK frequency for generating the clock of A/D conversion.

The frequency division ratio setting is common in Sampling Setup registers 0 and 1 (ADST0/1).

bit7:0	Description
0x80	Frequency division ratio 1
0x00	Frequency division ratio 2
0x01	Frequency division ratio 3
0x02	Frequency division ratio 4
...	...
0X07	Frequency division ratio 9 (Initial value)
...	...
0x3C	Frequency division ratio 62
0x3D	Frequency division ratio 63
0x3E	Frequency division ratio 64
0x3F	Frequency division ratio 65

Compare clock cycle = Base clock (HCLK) cycle × Frequency division ratio
Comparison time = Compare clock cycle × 14

Example: When the CT[7:0] set value = 0 (Compare frequency division ratio: 2) and
HCLK = 20 MHz (50 ns),
Compare clock cycle = 50 ns × 2 = 100 ns
Comparison time = 100 ns × 14 = 1400 ns

Notes:

- *Setting 0x40 to 0x7F to bit7:0 is not allowed.*
- *It is not allowed to write to the clock division setting register (ADCT) during A/D conversion. A/D conversion is not period of waiting start factors. It is allowed to write to the clock division setting register (ADCT) during no start factors period.*
  Only when the base clock prescaler register (BSC_PSR) of clock generator is set to 0x0, A/D conversion can be performed in frequency division ratio at 1.
- *For setting the compare clock cycle, refer to the Electrical Characteristics in the Data Sheet to make sure that an appropriate time should be selected in accordance with an analog power supply voltage (AVCC) and a base clock (HCLK) cycle.*

5.16 A/D Operation Enable Setup Register (ADCEN)

The A/D Operation Enable Setup register (ADCEN) is used to turn the 12-bit A/D converter to the operation enable state.

bit	15	14	13	12	11	10	9	8	7	6	5	4	3	2	1	0
Field	ENBLTIME[15:8]								Reserved						READY	ENBL
Attribute	R/W								R						R	R/W
Initial value	0xFF								000000						0	0

[bit15:8] ENBLTIME[15:8]: Operation enable state transition cycle selection bits

These bits select the cycle count of operation enable state transition period.

Operation enable state transition period= Base clock (HCLK) cycle × (ENBLTIME setting value × 4 + 1)

Example: When ENBLTIME[15:8] = 0xFF, and HCLK = 20MHz (50ns),

Operation enable state transition period = 50 ns × (255×4 + 1) = 51050 ns

[bit7:2] Reserved: Reserved bits

The read value is undefined.

[bit1] READY: A/D operation enable state bit

This bit indicates whether the A/D converter is in the operation enable state or in the operation stop state.

A/D conversion can be performed only in the operation enable state.

An A/D conversion request in the operation stop state is ignored.

If the A/D converter enters the operation stop state during A/D conversion, A/D conversion stops immediately.

bit	Description
0	Operation stop state
1	Operation enable state

[bit0] ENBL: A/D operation enable bit

This bit enables the operation of the A/D converter.

Writing 1 to the ENBL bit turns the A/D converter to the operation enable state after the period of operation enable state transitions. On the other hand, writing 0 to this bit turns the A/D converter to the operation stop state.

bit	Description
0	Stops operation
1	Enables operation

Note:

- *For setting the period of operation enable state transition, refer to the Electrical Characteristics in the Data Sheet to make sure that an appropriate time should be selected in accordance with an analog power supply voltage (AVCC) and a base clock (HCLK) cycle.*
  It is not allowed to rewrite ENBLTIME[15:8] during the period between writing 1 to ENBL bit and setting READY bit to 1.
  When setting the CPU to the timer mode, the stop mode, RTC mode, deep standby STOP mode, and deep standby RTC mode, set the ENBL bit to 0 and turn the A/D converter to the operation stop state.

5.17 Upper Limit Setup Register (WCMPDH)

The Upper Limit Setup register (WCMPDH) is used to set the upper limit used for the range comparison.

bit	31	30	29	28	27	26	25	24
Field	CMHD11	CMHD10	CMHD9	CMHD8	CMHD7	CMHD6	CMHD5	CMHD4
Attribute	R/W	R/W	R/W	R/W	R/W	R/W	R/W	R/W
Initial value	0	0	0	0	0	0	0	0

bit	23	22	21	20	19	18	17	16
Field	CMHD3	CMHD2	Reserved					
Attribute	R/W	R/W	R					
Initial value	0	0	000000					

[bit31:22] CMHD11 to CMHD2: Upper limit bits

These bits specify the upper limit threshold used for range comparison.

bit31:22	Description
Upper limit	

[bit21:16] Reserved: Reserved bits

When writing, always write 0.

When reading, 0 is always read.

Note:

- *When the range comparison function enabled, the most significant 10 bits (bit11:2) of the A/D conversion result is compared with this register (CMHD). The comparison with the least significant 2 bits (bit1:0) of the A/D conversion result is not executed.*

5.18 Range Comparison Control Register (WCMPCR)

The range comparison control register (WCMPCR) is used for the confirmation of continuous detection specification count and its state, the selection of within-range or out-of-range confirmation, the confirmation of upper limit excess or lower limit excess in the out-of-range area, and enabling and disabling of range comparison interrupt.

bit	7	6	5	4	3	2	1	0
Field	RCOCD2	RCOCD1	RCOCD0	RCOIRS	RCOIE	RCOE	Reserved	
Attribute	R/W	R/W	R/W	R/W	R/W	R/W	R	
Initial value	0	0	1	0	0	0	00	

[bit7:5] RCOCD2 to RCOCD0: Continuous detection specification count/state indication bits

These bits indicate continuous detection specification count and continuous detection time state of range comparison result.

bit7:5	Description	
	At reading except in RMW accessing	At reading or at writing in RMW accessing
000	Continuous detection state: 0 times	Setting prohibited
001	Continuous detection state: 1 time	Specified continuous detection time: 1
010	Continuous detection state: 2 times	Specified continuous detection time: 2
011	Continuous detection state: 3 times	Specified continuous detection time: 3
100	Continuous detection state: 4 times	Specified continuous detection time: 4
101	Continuous detection state: 5 times	Specified continuous detection time: 5
110	Continuous detection state: 6 times	Specified continuous detection time: 6
111	Continuous detection state: 7 times	Specified continuous detection time: 7

- When the range comparison result count reaches the continuous detection specification count, the range comparison interrupt factor flag bit (RCINT) of the corresponding start channel is set to 1. And the continuous detection state is stopped at the continuous detection specification count.
- At reading other the read-modify-write (RMW) access, the continuous detection state is read out.
- At reading other the read-modify-write (RMW) access, the written value (the continuous detection specification count) is read out.

Notes:

- *Do not change the continuous detection specification count bit and state indication bit (RCOCD) while the range comparison operation is enabled (RCOE=1).*
- *Do not set 000 to the continuous detection specification count bit and state indication bit (RCOCD).*

[bit4] RCOIRS: Selection bit of within-range and out-of- range confirmation

bit	Description
0	Confirmation of out-of-range
1	Confirmation of within-range

- The A/D conversion result (scan conversion or priority conversion) selects the range comparison conditions of out-of- range or within-range for upper limit threshold bit (CMHD) and lower limit threshold bit (CMLD) selected by the upper/lower limit threshold selection bit (RCOTS).
- The range comparison condition at the out-of-range confirmation (RCOIRS=0) is as follows:

  A/D conversion result (scan conversion or priority conversion) > upper limit threshold bit (CMHD)
  Or, A/D conversion result (scan conversion or priority conversion) < lower limit threshold bit (CMLD)

- The range comparison condition at the within-range confirmation (RCOIRS=1) is as follows:

  A/D conversion result (scan conversion or priority conversion) ≤ upper limit threshold bit (CMHD)
  And, A/D conversion result (scan conversion or priority conversion) ≥ lower limit threshold bit (CMLD)

- At the range comparison detection for the out-of-range range confirmations (RCOIRS="0"), the upper limit threshold excess or below the lower limit threshold can be confirmed by threshold excess flag bit (RCOOF).

[bit3] RCOIE: Range comparison interrupt request enable bit

bit	Description
0	Range comparison interrupt disabled
1	Range comparison interrupt enabled

- When the range comparison interrupt factor flag bit (RCINT) of the corresponding startup channel is set to 1 and when the range comparison interrupt request is enabled (RCOIE=1), the interrupt request is generated.

[bit2] RCOE: Range comparison execution enable bit

Selects A/D comparison function and range comparison function.

bit	Description
0	Range comparison execution disabled
1	Range comparison execution enabled

- When the range comparison execution enable bit (RCOE) is 0, the range comparison execution is disabled. Moreover, the continuous detection count sate is initialized to 000.

When the range comparison execution enable bit (RCOE) is 1, the range comparison execution is enabled.

[bit1:0] Reserved: Reserved bits

When writing, always write 0.
When reading, 0 is always read.

5.19 Lower Limit Threshold Setup Register (WCMPDL)

The lower limit threshold setup register (WCMPDL) is used to set the lower limit threshold for the range comparison.

bit	15	14	13	12	11	10	9	8
Field	CMLD11	CMLD10	CMLD9	CMLD8	CMLD7	CMLD6	CMLD5	CMLD4
Attribute	R/W	R/W	R/W	R/W	R/W	R/W	R/W	R/W
Initial value	0	0	0	0	0	0	0	0

bit	7	6	5	4	3	2	1	0
Field	CMLD3	CMLD2	Reserved					
Attribute	R/W	R/W	R					
Initial value	0	0	000000					

[bit15:6] CMLD11 to CMLD2: Lower limit threshold bits

Set the lower limit threshold used for the range comparison.

bit15:6	Description
Lower limit threshold	

[bit5:0] Reserved: Reserved bits

When writing, always write 0.
When reading, 0 is always read.

Note:

- *When the range comparison execution is enabled, the most significant 10 bits (bit11:2) of the A/D conversion result is compared with this register (CMLD). The comparison with the least significant 2 bits (bit1:0) of the A/D conversion result is not executed.*

5.20 Range Comparison Channel Select Register (WCMPSR)

The range comparison channel select register (WCMPSR) is used to set the channel for the range comparison.

bit	15	14	13	12	11	10	9	8
Field	Reserved		WCMD	WCCH[4:0]				
Attribute	R		R/W	R/W				
Initial value	00		0	00000				

[bit15:14] Reserved: Reserved bits

When writing, always write 0.
When reading, 0 is always read.

[bit13] WCMD: Comparison mode select bit

bit	Description
0	Compares the conversion result of the channel set with WCCH[4:0] bits.
1	Compares the conversion results of all channels.

Selects the target for the range comparison. When this bit is 1, the setting of WCCH[4:0] bits becomes invalid.

[bit12:8] WCCH[4:0]: Comparison target analog input channel

bit12:8	Description
00000	Ch.0
00001	Ch.1
00010	Ch.2
- - -	- - -
11101	Ch.29
11110	Ch.30
11111	Ch.31

Selects the target analog input channel for comparison. When WCMD bit is 1, the setting of these bits is invalid. It is not possible to set the channel that is not defined in the product specifications. See the specified number of the analog input channels in the Data Sheet of the product used.

5.21 Range Comparison Threshold Excess Flag Register (WCMRCOT)

The range comparison threshold excess flag register (WCMCOT) is used to indicate that the comparison result is beyond the upper limit threshold or below the lower limit threshold in the out-of-range confirmation setting.

bit	31	30	29	28	27	26	25	24
Field	Reserved							
Attribute	R							
Initial value	0x00							

bit	23	22	21	20	19	18	17	16
Field	Reserved							
Attribute	R							
Initial value	0x00							

bit	15	14	13	12	11	10	9	8
Field	Reserved							
Attribute	R							
Initial value	0x00							

bit	7	6	5	4	3	2	1	0
Field	Reserved							RCOOF
Attribute	R							R/W
Initial value	0000000							0

[bit31:1] Reserved: Reserved bits

When writing, always write 0.

When reading, 0 is always read.

[bit0] RCOOF: Threshold excess flag bit

bit	Description
0	Below the lower limit threshold (A/D data < Lower limit threshold bit)
1	Beyond the upper limit threshold (A/D data > Upper limit threshold bit)

- For the confirmation of outside-range (RCOIRS=0), this bit indicates that the range comparison result is greater than the upper limit threshold setting register (RCOOF=1), or the result is smaller than the lower limit threshold (RCOOF=0).
- For the confirmation of outside-range (RCOIRS=0), when the range comparison result is confirmed to be within the range, the threshold excess flag bit holds the prior value.
- When the range comparison interrupt factor flag bit (RCINT) of the corresponding startup channel is set to be 1, the threshold excess flag bit (RCOOF) is not updated and holds the prior value, even if the range comparison result is confirmed to be outside the range for the confirmation of outside-range (RCOIRS=0).
- For the confirmation of within-range (RCOIRS=1), the threshold excess flag bit has no meaning (the bit holds the prior value.)

5.22 Range Comparison Flag Register (WCMRCIF)

The range comparison flag register (WCMRCIF) indicates the interrupt factor due to the continuous detection of the range comparison result.

bit	31	30	29	28	27	26	25	24
Field	Reserved							
Attribute	R							
Initial value	0x00							

bit	23	22	21	20	19	18	17	16
Field	Reserved							
Attribute	R							
Initial value	0x00							

bit	15	14	13	12	11	10	9	8
Field	Reserved							
Attribute	R							
Initial value	0x00							

Bit	7	6	5	4	3	2	1	0
Field	Reserved							RCINT
Attribute	R							R/W
Initial value	0000000							0

[bit31:1] Reserved: Reserved bits

When writing, always write 0.

When reading, 0 is always read.

[bit0] RCINT: Range comparison interrupt factor flag bit

bit	Description	
	Read	Write
0	Range comparison interrupt factor clear state	Bit clear
1	State where the interrupt factor is generated due to the continuous detection of range comparison results	No change and no influence to others.

- The RCINT bit is set to 1 by the continuous detection of the range comparison results of the corresponding startup channel.
- When RCINT bit and range comparison interrupt request permission (RCOIE) of the corresponding startup channel are 1, the range comparison interrupt request is generated.
- At writing, the RCINT bit is cleared by 0, the bit is not changed by 1 and has no influence to others.

Notes:

- *At read-modify-write access (RMW), 1 is read.*
- *When the software clear (writing RCINT=0) and hardware set occurs simultaneously, the hardware set has a priority.*

CHAPTER 1-3: A/D Timer Trigger Selection

This chapter explains the functions and operations to select a timer trigger of the A/D converter.

---

1. Overview
2. Registers

1. Overview

This section explains the operations to select a timer trigger of the A/D converter.

Selecting a Timer Trigger of the A/D Converter

The A/D converter can be started by the factors shown in Table 1-1.

Table 1-1 A/D Converter Start Factor

Conversion Type	Start Factor
Priority level 1 conversion	– Input from an external trigger pin (at falling edge)
Priority level 2 conversion	– Software (when the Priority Conversion Start Bit(PSTR) of Priority Conversion Control Register (PCCR) is set to 1) – Trigger input from timer (at rising edge)
Scan conversion	– Software (when the Scan Conversion Start Bit (SSTR) of SCAN Conversion Control Register (SCCR) is set to 1) – Trigger input from timer (at rising edge)

The A/D converter can be started with two types of timers: base timer and multifunction timer.

A timer start factor can be selected using the Scan Conversion Timer Trigger Selection Register (SCTSL) or Priority Conversion Timer Trigger Selection Register (PRTSL). The A/D converter starts A/D conversion if a rising edge of the selected timer is detected while timer starting is enabled.

The multiple A/D converters can use same start factor.

For details on the operations of the 12-bit A/D converter, see 3. Explanation of operations in the 12-bit A/D Converter.

2. Registers

This section explains the configuration and functions of the registers used to select an A/D timer trigger.

List of Timer Trigger Selection Registers for A/D Converter

Abbreviation	Register Name	Reference
SCTSL	Scan Conversion Timer Trigger Selection Register	2.1
PRTSL	Priority Conversion Timer Trigger Selection Register	2.2

2.1 Scan Conversion Timer Trigger Selection Register (SCTSL)

The Scan Conversion Timer Trigger Selection Register (SCTSL) is used to select a timer trigger when performing scan conversion.

bit	15	14	13	12	11	10	9	8
Field	Reserved				SCTSL[3:0]			
Attribute	R				R/W			
Initial value	XXXX				0000			

[bit15:12] Reserved: Reserved bits

The read values are undefined.

Writing has no effect in operation.

[bit11:8] SCTSL[3:0]: Scan conversion timer trigger selection bits

bit11:8	Description
0000	No selected trigger (Input is fixed to 0.)
0001	Starts scan conversion with the multifunction timer.
0010	Base timer ch.0
0011	Base timer ch.1
0100	Base timer ch.2
0101	Base timer ch.3
0110	Base timer ch.4
0111	Base timer ch.5
1000	Base timer ch.6
1001	Base timer ch.7
1010	Base timer ch.8
1011	Base timer ch.9
1100	Base timer ch.10
1101	Base timer ch.11
1110	Base timer ch.12
1111	Base timer ch.13

2.2 Priority Conversion Timer Trigger Selection Register (PRTSL)

The Priority Conversion Timer Trigger Selection Register (PRTSL) is used to select a timer trigger when performing priority conversion.

bit	7	6	5	4	3	2	1	0
Field	Reserved				PRTSL[3:0]			
Attribute	R				R/W			
Initial value	XXXX				0000			

[bit7:4] Reserved: Reserved bits

The read values are undefined.

Writing has no effect in operation.

[bit3:0] PRTSL[3:0]: Priority conversion timer trigger selection bits

bit3:0	Description
0000	No selected trigger (Input is fixed to 0.)
0001	Starts priority conversion with the multifunction timer.
0010	Base timer ch.0
0011	Base timer ch.1
0100	Base timer ch.2
0101	Base timer ch.3
0110	Base timer ch.4
0111	Base timer ch.5
1000	Base timer ch.6
1001	Base timer ch.7
1010	Base timer ch.8
1011	Base timer ch.9
1100	Base timer ch.10
1101	Base timer ch.11
1110	Base timer ch.12
1111	Base timer ch.13

CHAPTER 1-4: A/D Converter Offset Calibration

This chapter describes the offset calibration for the A/D converter.

1. Overview
2. Configuration Block Diagram
3. Operation
4. Setting Procedure Example
5. Register List
6. Usage Precautions

1. Overview

The A/D converter in this device has an offset error due to process variation.
Offset correction of the A/D converter is performed for correcting the zero-transition voltage and full scale transition voltage. This enables the elimination of intermediate code error for minimizing the overall error.

Figure 1-1 Overall Error before Correction

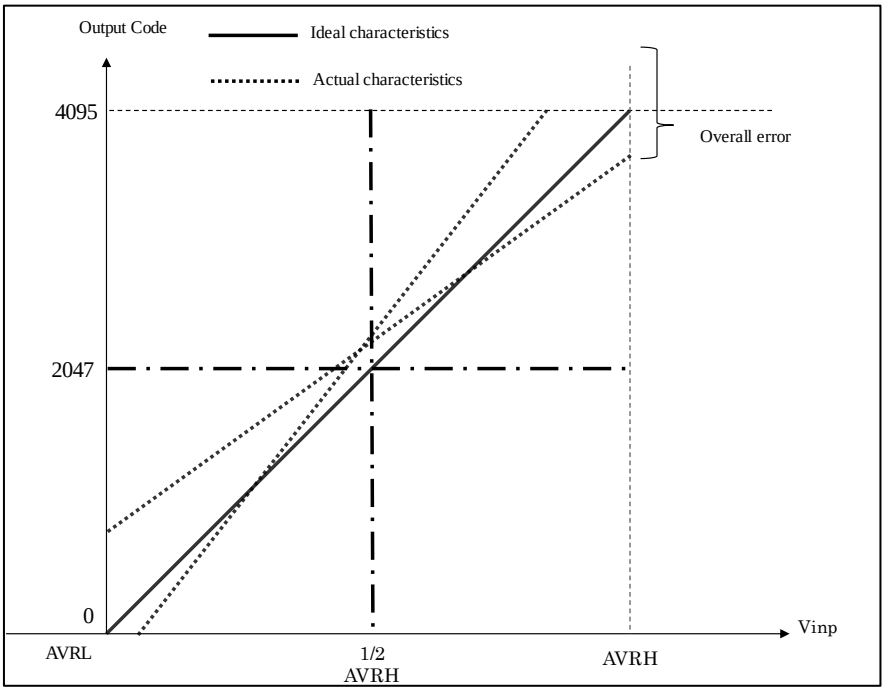

Figure 1-2 Overall Error after Correction

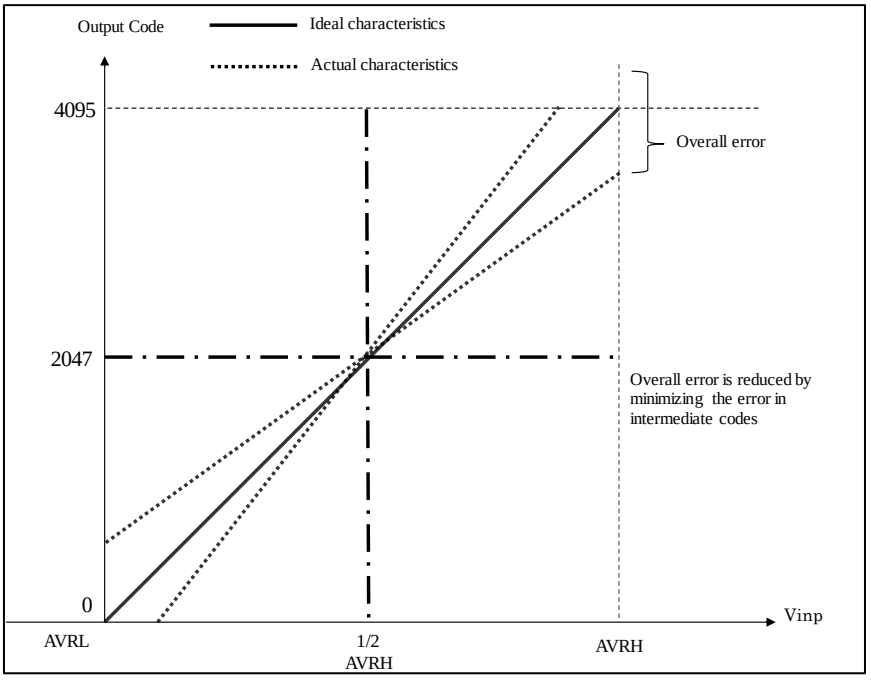

2. Configuration Block Diagram

The block diagram of the A/D converter offset calibration is shown in Figure 2-1.

Figure 2-1 Block Diagram of A/D Converter Offset Calibration

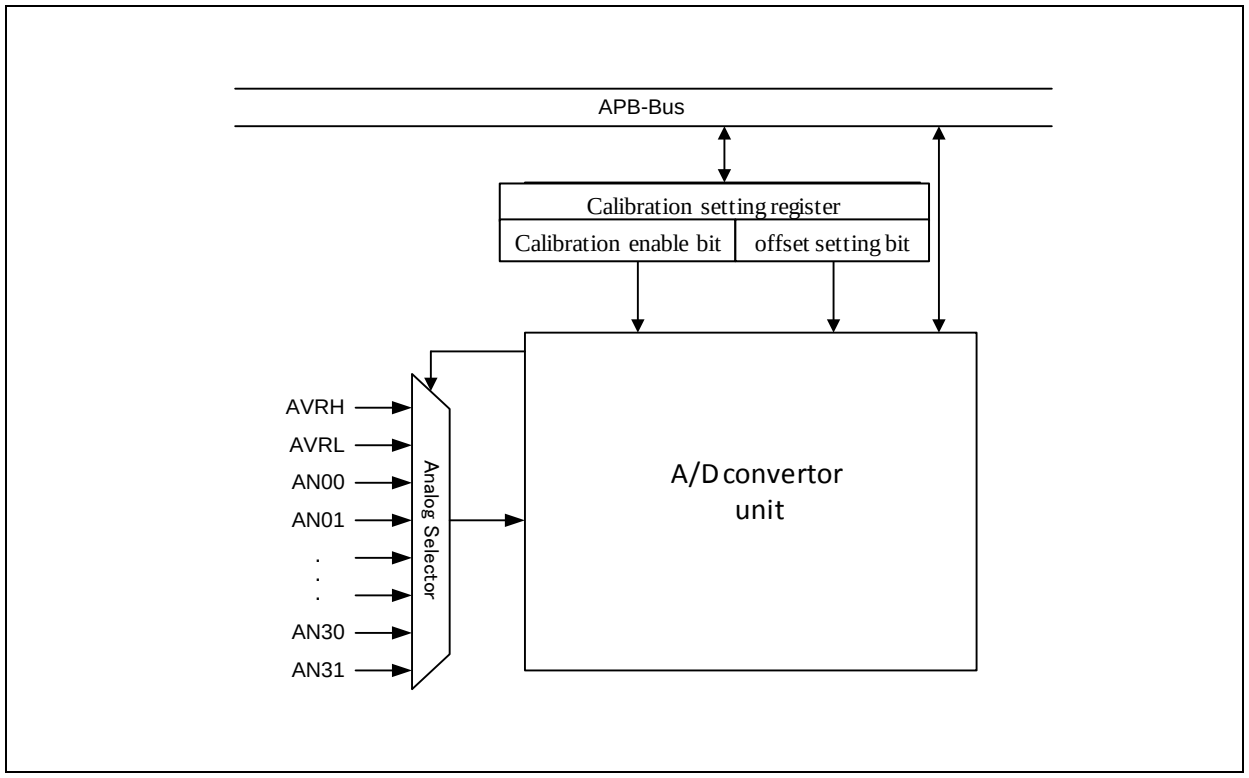

Setting the calibration setting register connects AVRH and AVRL to the A/D converter, enabling A/D conversion.

3. Operation

This section describes the operation of the offset calibration for the A/D converter.

3.1 Operation of A/D Converter Offset Calibration

3.1.1 Setting the Value for Offset Calibration

An offset calibration value can be written to the offset calibration value setting bit (OFST) in the calibration setting register (CALSR) to correct the offset error of the A/D converter due to process variation.

Figure 3-1 shows the change in characteristics when offset calibration is performed.

Figure 3-1 Offset Characteristics

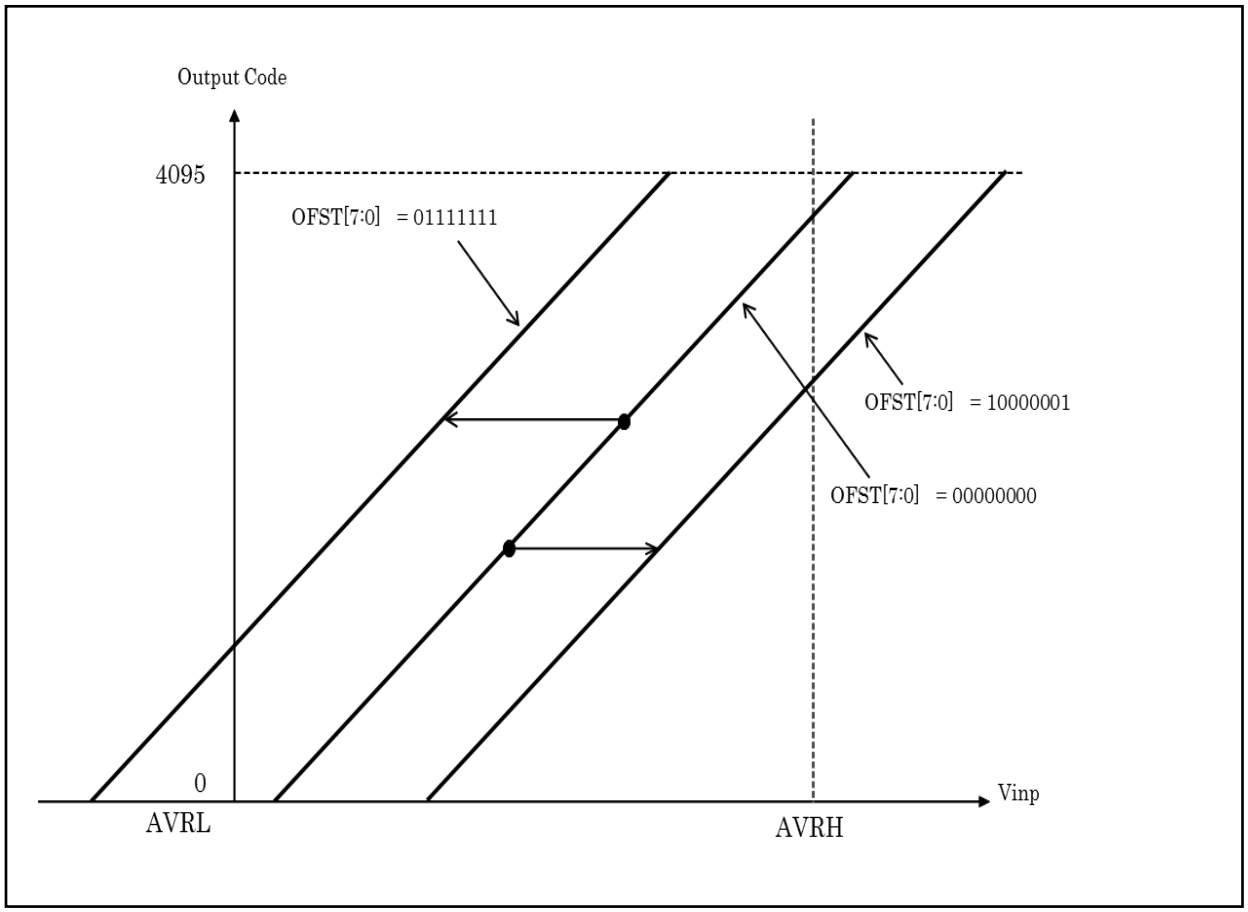

3.1.2 A/D Converter Offset Calibration

Following three steps must be completed to perform offset calibration for the A/D converter.

- A/D conversion of the analog reference voltage value AVRH
- A/D conversion of the analog reference voltage value AVRL
- Calculation of offset calibration value

The detailed setting steps are provided starting from section 3.1.3.

An A/D conversion must be performed for the analog reference voltage value before performing offset calibration for the A/D converter. For this purpose, an A/D conversion of the analog reference voltage value (AVRH/AVRL) is provided.

In A/D conversion of AVRH/AVRL, maximum offset correction is performed to obtain the code for AVRH/AVRL.

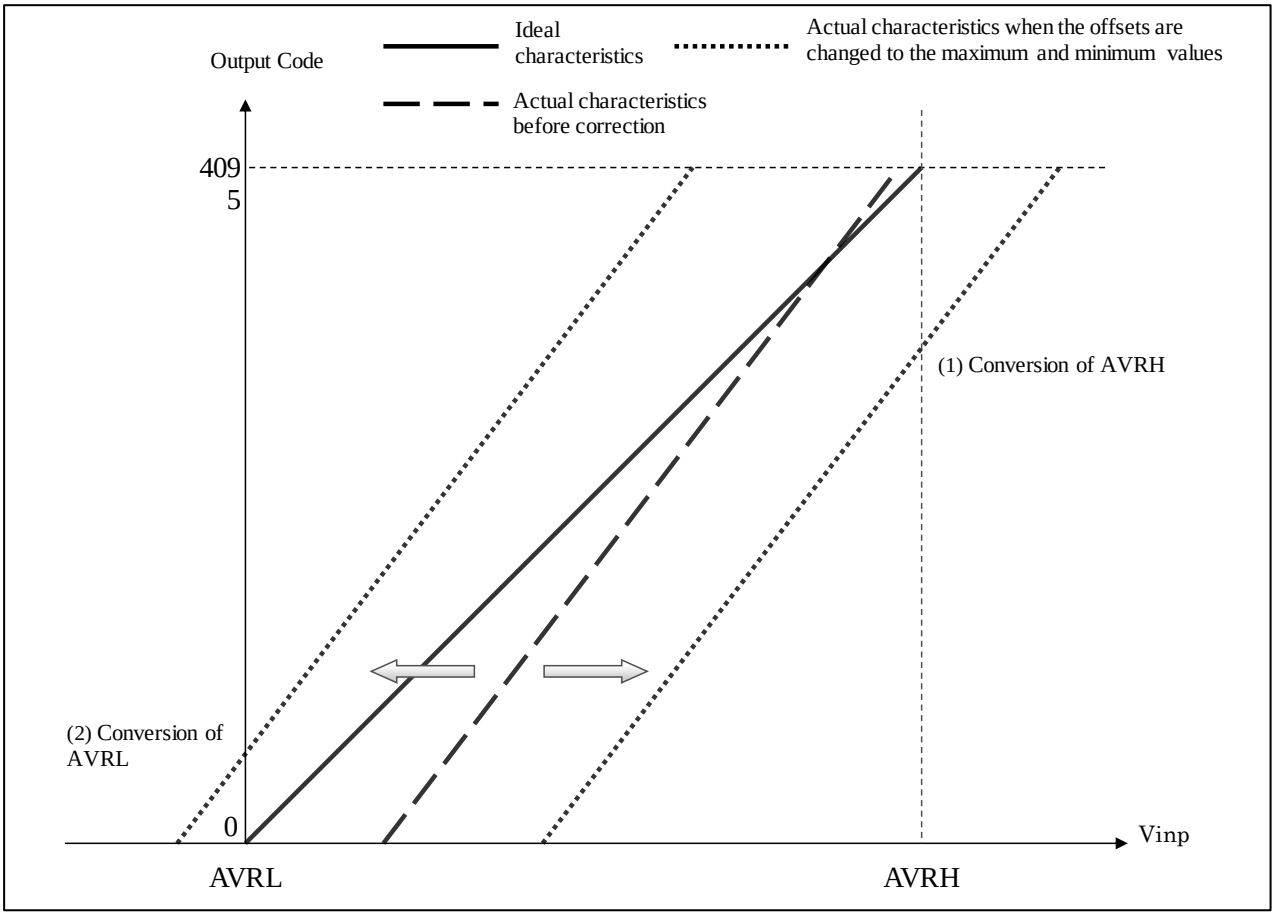

(1) For details on the AVRH conversion method, see 3.1.3.1 AVRH Conversion Method.

(2) For details on the AVRL conversion method, see 3.1.3.2 AVRL Conversion Method.

Next, connect the AVRH conversion result and AVRL conversion result with a line, and find the difference between the ideal line and the intermediate code. The difference from the ideal line indicates the code amount for which calibration is required.

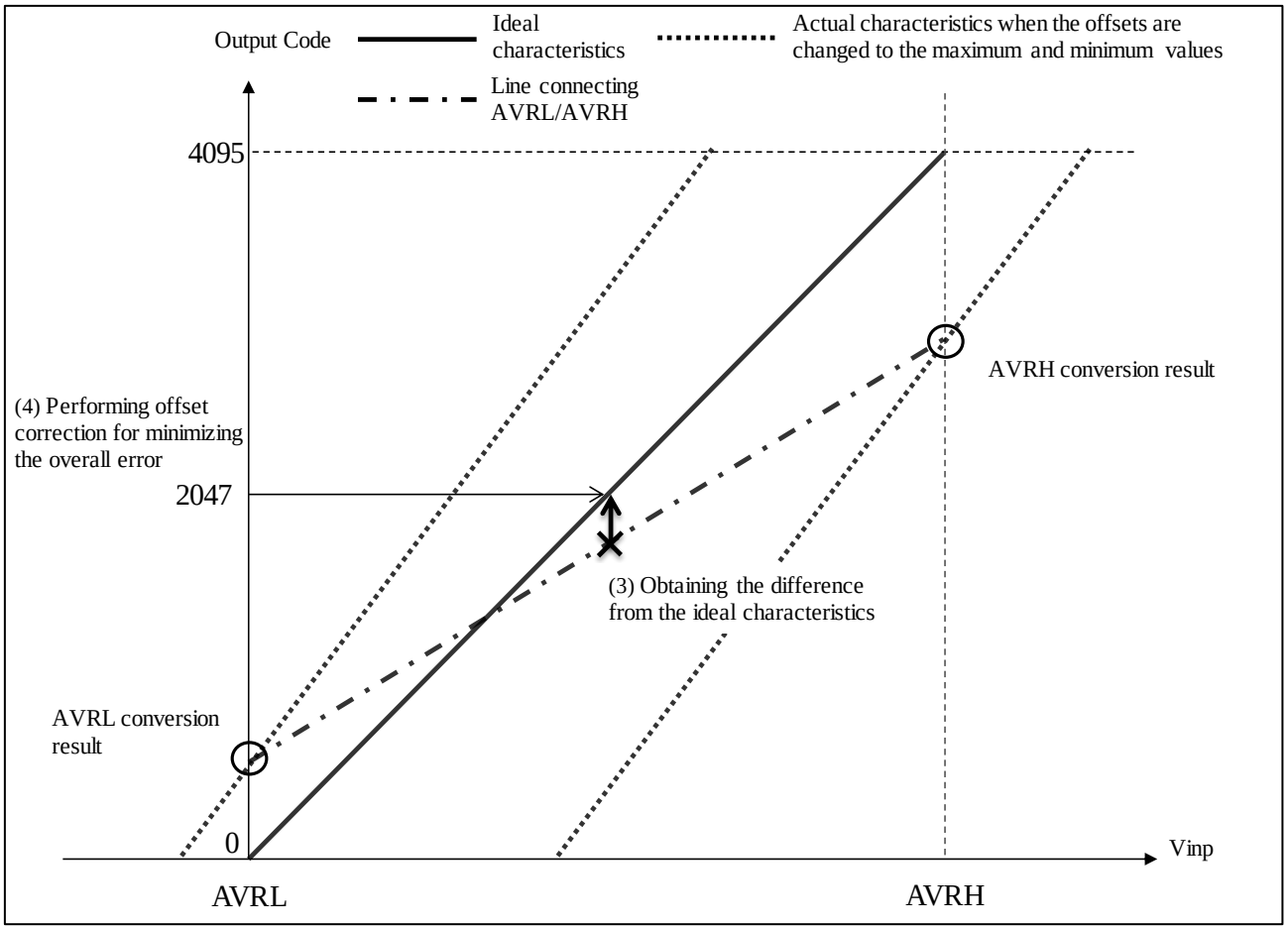

For details on (3) and (4), see 3.1.4 Calculation of Offset Calibration Value.

The intermediate code difference required for calibration is minimized for reducing the overall error.

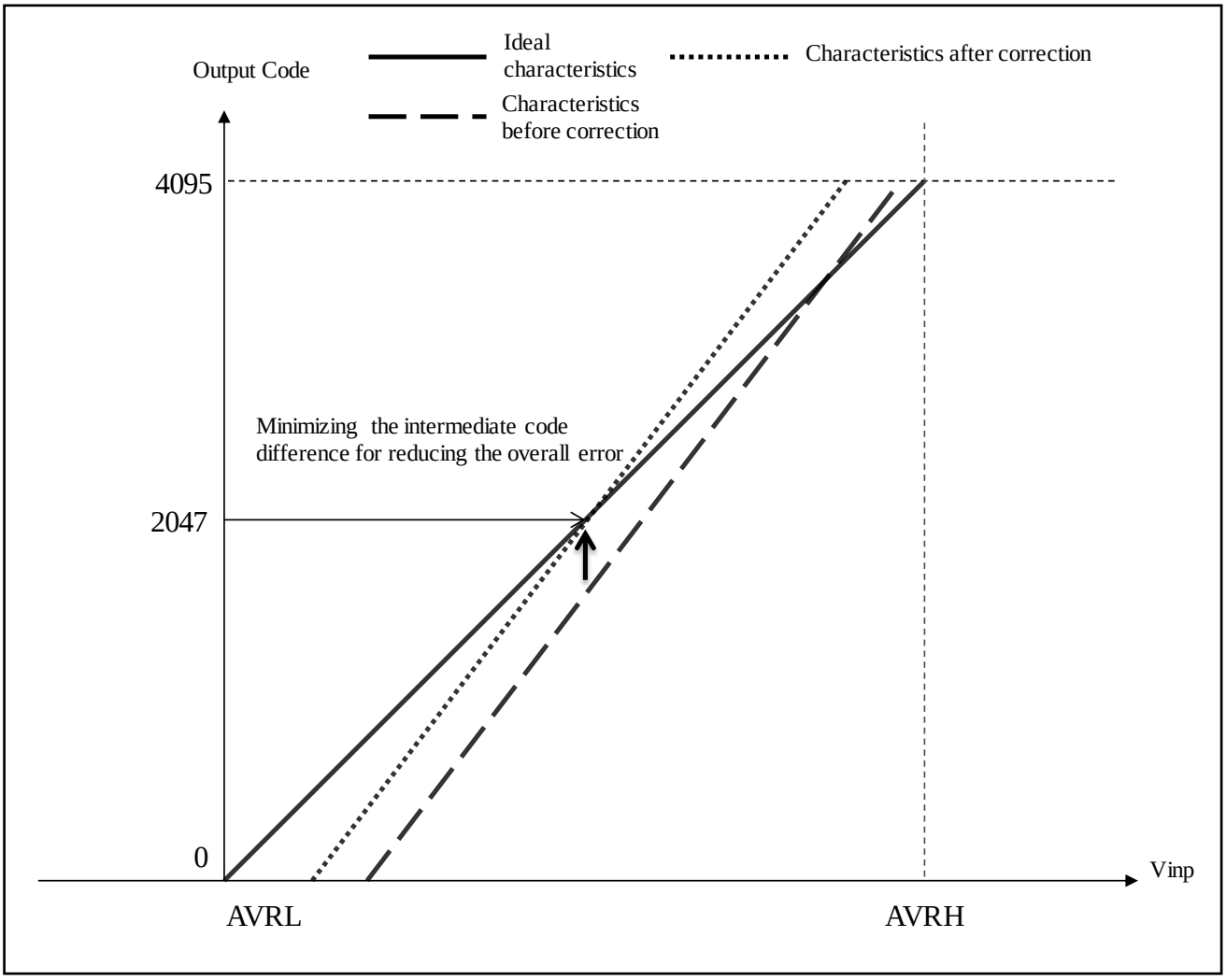

3.1.3 A/D Converter Offset Calibration Setting Example

3.1.3.1 AVRH Conversion Method

1. Only the bit that corresponds to AN0 of the scan conversion input selection register (SCIS) is set to 1, and all other bits are set to 0.
2. The CALEN bit in the calibration setting register (CALSR) is set to 1, and the OFST bit is set to 0x81.
3. Scan conversion of the A/D converter is performed, and the conversion results are fetched from the scan conversion FIFO data register (SCFD) after the conversion is completed.

3.1.3.2 AVRL Conversion Method

1. The bit that corresponds to AN1 of the scan conversion input selection register (SCIS) only is set to 1, and all other bits are all set to 0.
2. The CALEN bit of the calibration setting register (CALSR) is set to 1, and the OFST bit is set to 0x7F.
3. Scan conversion of the A/D converter is performed, and the conversion results are fetched from the scan conversion FIFO data register (SCFD) after the conversion is completed.

3.1.4 Calculation of Offset Calibration Value

The calculation method for data that is written to the offset calibration value setting bit (OFST) in the calibration setting register (CALSR) is shown below.

The formula below is used to calculate the difference of intermediate code between the actual characteristics and ideal characteristics based on the AVRH/AVRL voltage conversion values.

OFT_CAL = (4095 - (OFT_VRH + OFT_VRL)) * 2

OFT_VRH: A/D conversion value of AVRH

OFT_VRL: A/D conversion value of AVRL

The offset calibration value (OFST) is calculated from the OFT_CAL calculation value, and it is written to the offset calibration value setting bit (OFST).

OFST	OFT_CAL
0x7F	+127
:	:
0x01	+1
0x00	0
0xFF	-1
:	:
0x81	-127
0x80	Setting prohibited

4. Setting Procedure Example

This section provides an example of the setting procedure for the offset calibration function for the A/D converter.

Figure 4-1 Example of AVRH A/D Conversion Setting Procedure

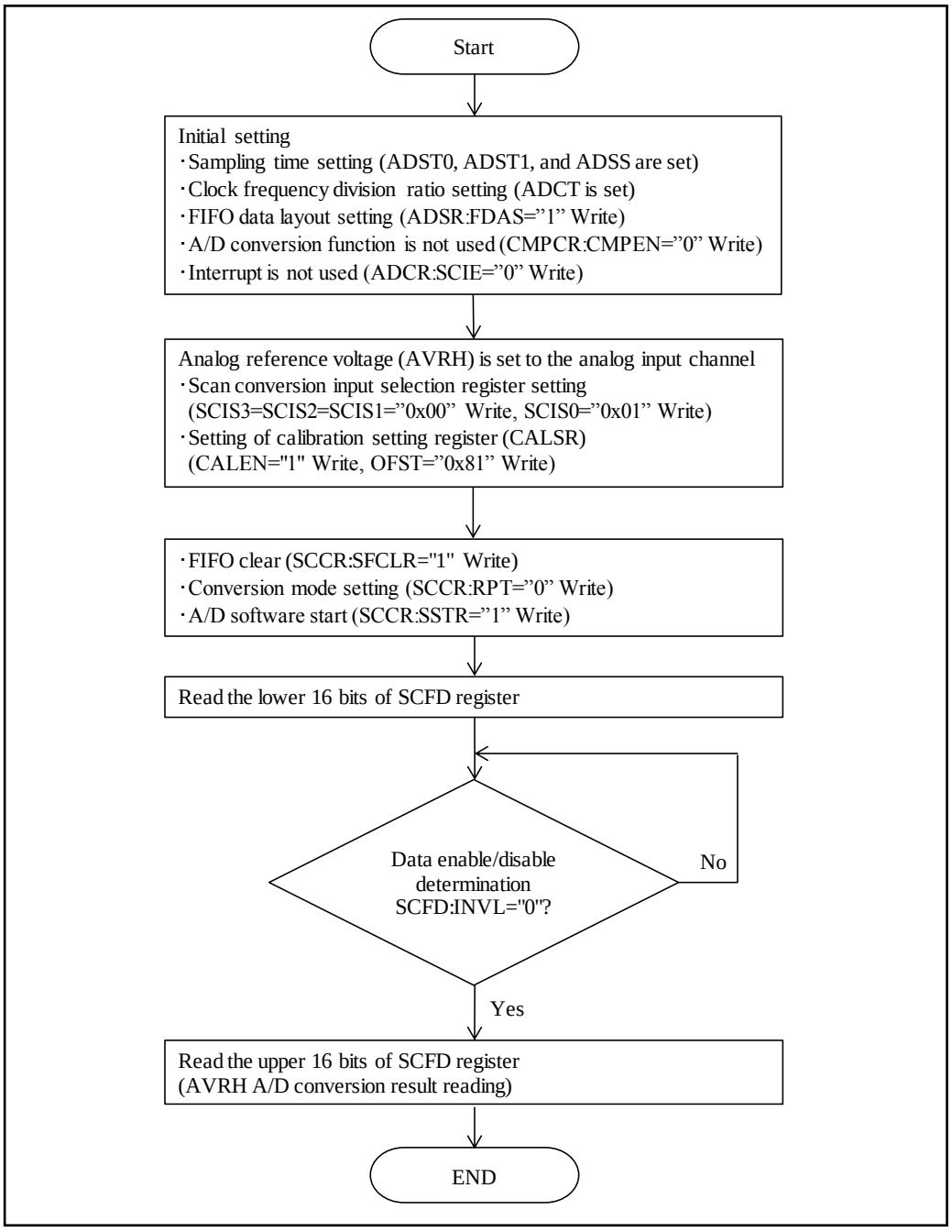

Note:

- *The A/D conversion of AVRH/AVRL can be performed at the fastest speed setting provided in "Electrical Characteristics" of the Data Sheet for your product.*

Figure 4-2 Example of AVRL A/D Conversion Setting Procedure

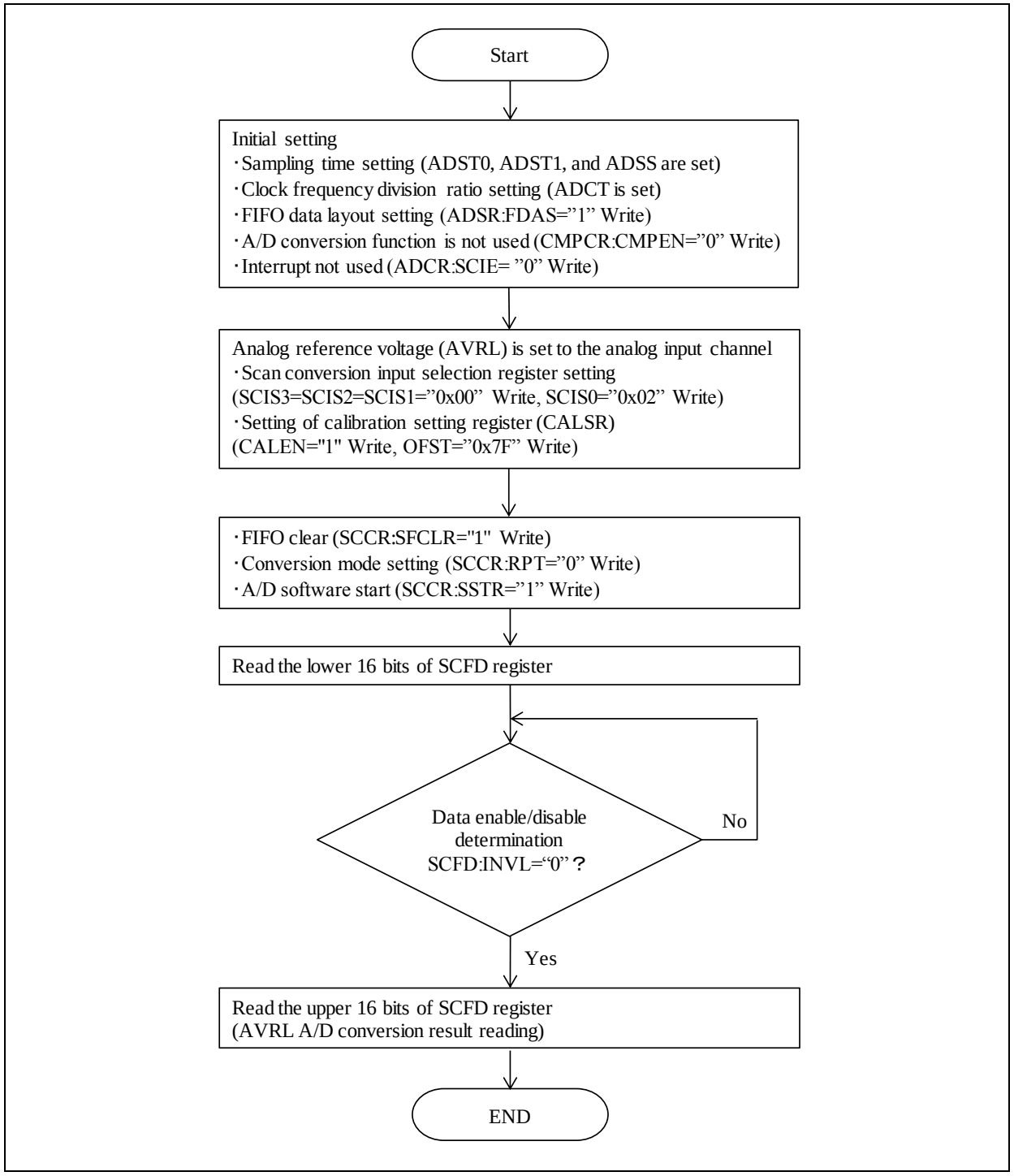

Note:

- *The A/D conversion of AVRH/AVRL can be performed at the fastest speed setting provided in Electrical Characteristics of the Data Sheet for your product.*

5. Register List

This section describes the registers for the offset calibration function of the A/D converter.

Register Abbreviation	Register Name	Reference
CALSR	Calibration setting register	5.1

5.1 Calibration Setting Register (CALSR)

The calibration setting register (CALSR) is used to set whether calibration (offset calibration) is allowed and to set the offset calibration value.

Bit	31	9	8	7	0
Field	Reserved		CLBEN	OFST	
Attribute	-		R/W	R/W	
Default value	-		0	0x00	

[bit31:9] Reserved: Reservation bit

A value read out always be 0.

Write a value of 0.

[bit8] CLBEN: Calibration permission bit

This bit determines whether the calibration operation of the A/D converter is permitted.

Bit	Description
0	Calibration operation stop (default value)
1	Calibration operation permitted

[bit7:0] OFST: Offset calibration value setting bit

This bit sets the offset calibration value of the A/D converter.

Bit	Description
Writing	This bit sets the offset calibration value of the A/D converter.
Reading	The value that was set is read out. The default value is 0x00.

The OFST bit can be changed to set the calibration values shown below.

For details OFT_CAL, see 3.1.4 Calculation of Offset Calibration Value.

OFST	OFT_CAL
0x7F	+127
:	:
0x01	+1
0x00	0
0xFF	-1
:	:
0x81	-127
0x80	Setting prohibited

Notes

- *Overwriting of this register is prohibited during A/D conversion.*
- *When set to calibration operation permitted (CLBEN=1), conversion operations other than scan conversion are prohibited.*

6. Usage Precautions

This section provides the usage precautions of the offset calibration for the A/D converter.

- Overwriting of the calibration setting register (CALSR) is prohibited during A/D conversion.
- When the calibration operation is permitted (CALEN=1 for the calibration setting register (CALSR)), all conversion operations other than scan conversion are prohibited.
- Before performing the calibration operation, stop the conversion operations for units other than the unit performing calibration. Simultaneous calibration of multiple units is prohibited.
- During A/D conversion of AVRH and AVRL, do not restart scan conversion by setting SSTR of the scan conversion control register (SCCR) to 1.
- If A/D conversion is performed for a channel other than AVRH and AVRL, be sure to always set the offset calibration value setting bit (CLBEN) of the calibration setting register (CALSR) to 0.
- If measurement error occurred due to the measurement environment, perform conversion of AVRH/AVRL multiple times, and then use the average value to perform offset calibration.

CHAPTER 2: 12-bit D/A Converter

This chapter explains the functions and operations of the 12-bit D/A converter.

1. Overview
2. Configuration
3. Operations
4. Example of Setting Procedure
5. Registers

1. Overview

The 12-bit D/A converter converts a 12-bit digital value into an analog value.

Features of the 12-bit D/A Converter

- 12-bit resolution (Maximum: 2 units)
  - 12-bit mode / 10-bit mode can be selected.
- R-2R method
- The 12-bit D/A converter stops operating in the following low power consumption modes.
  - RTC mode
  - Stop mode
  - Deep standby RTC mode
  - Deep standby Stop mode

2. Configuration

This section shows the configuration of the 12-bit D/A converter.

Figure 2-1 12-bit D/A Converter Block Diagram

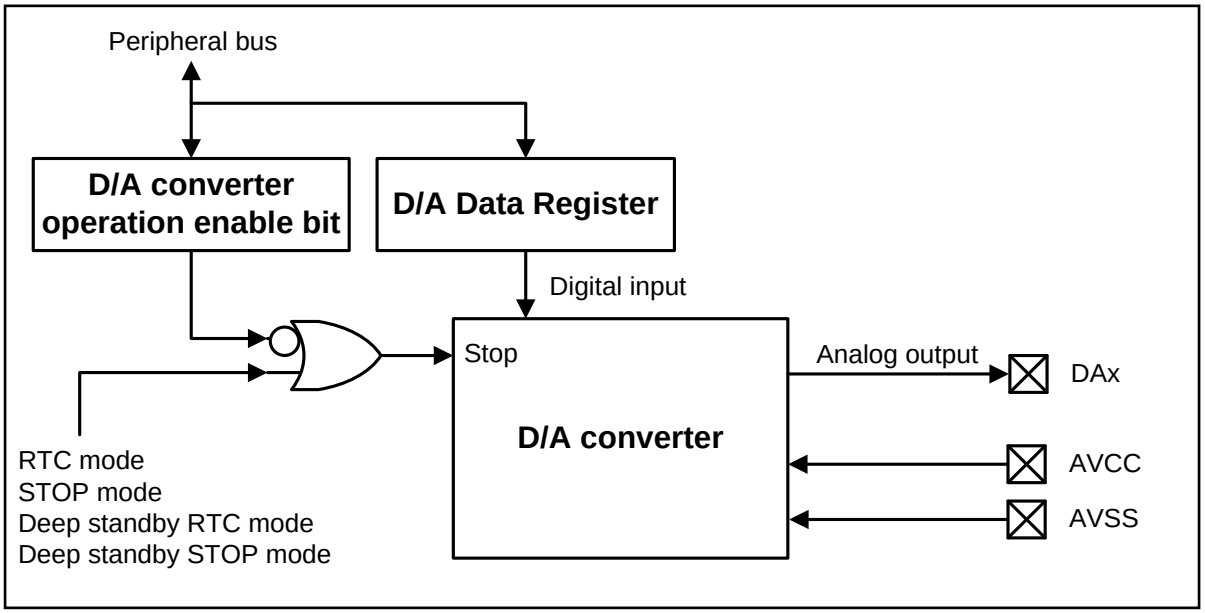

3. Operations

This section explains the operations of the 12-bit D/A converter.
Set the 12-bit D/A converter to operation enable state before performing D/A conversion. When 1 is written to the DAE bit in the D/A Control register (DACR), the 12-bit D/A converter transits from operation stop state to operation enable state. When 0 is written to the DAE bit in the D/A Control register (DACR), the 12-bit D/A converter immediately changes to operation stop state.
D/A conversion can be executed only in the operation enable state. D/A conversion is prohibited in the operation stop state.
It can be checked whether the 12-bit D/A converter is in the operation enable state by reading the DRDY bit in the D/A Control register (DACR).

If a value is written to the D/A Data Register (DADR) in the operation enable state, the 12-bit D/A converter converts the digital value written into an analog value and outputs the analog value from the DAx pin. In this situation, the direction of the I/O port is input, input to the I/O port is blocked, and the I/O port is disconnected from the pull-up register.
In certain low power consumption modes, regardless of the setting of the DAE bit, the operation of the 12-bit D/A converter stops.
If the DAE bit in the D/A Control register (DACR) is 1 when the 12-bit D/A converter returns from a low power consumption mode, the 12-bit D/A converter transits from the operation stop state to the operation enable state after the operation enable state transition period has elapsed.
Table 3-1 shows the operation state of the 12-bit D/A converter.

Table 3-1 Operation State of the 12-bit D/A Converter

Operation mode	DRDY	12-bit D/A Converter Operation
RTC mode STOP mode Deep standby RTC mode Deep standby STOP mode	-	Stopped
Modes other than the above	0	Stopped
	1	Enabled

In 12-bit mode, the voltage that can be output when the operation of the 12-bit D/A converter is enabled ranges from 0.0 V to 4095/4096×AVCC (AVCC: voltage of the AVCC pin). Table 3-2 shows the relation between the D/A Data Register (DADR) and the ideal output voltage.

Table 3-2 Relation between DA[11:0] and Analog Output Value in 12-bit Mode

DA[11:0]	Ideal Output Voltage
000000000000	0 / 4096 × AVCC
000000000001	1 / 4096 × AVCC
000000000010	2 / 4096 × AVCC
...	...
111111111101	4093 / 4096 × AVCC
111111111110	4094 / 4096 × AVCC
111111111111	4095 / 4096 × AVCC

In 10-bit mode, the voltage that can be output when the operation of the 12-bit D/A converter is enabled ranges from 0.0 V to 1023/1024×AVCC (AVCC: voltage of the AVCC pin). Table 3-3 shows the ideal output voltages with the 10-bit mode data allocation selection bit (DDAS) in the D/A Data Register (DADR) set to 0, and Table 3-4 shows the ideal output voltages with the 10-bit mode data allocation selection bit (DDAS) in the D/A Data Register (DADR) set to 1.

Table 3-3 Relation between DA[11:0] of DDAS=0 and Analog Output Value

DA[11:0]	Ideal Output Voltage
000000000000	0 / 1024 × AVCC
000000000100	1 / 1024 × AVCC
000000001000	2 / 1024 × AVCC
...	...
111111110100	1021 / 1024 × AVCC
111111111000	1022 / 1024 × AVCC
111111111100	1023 / 1024 × AVCC

Table 3-4 Relation between DA[11:0] of DDAS=1 and Analog Output Value

DA[11:0]	Ideal Output Voltage
000000000000	0 / 1024 × AVCC
000000000001	1 / 1024 × AVCC
000000000010	2 / 1024 × AVCC
...	...
001111111101	1021 / 1024 × AVCC
001111111110	1022 / 1024 × AVCC
001111111111	1023 / 1024 × AVCC

When the 12-bit D/A converter stops operating, its output is Hi-Z.

4. Example of Setting Procedure

This section provides an example of the procedure for setting the 12-bit D/A converter.

Below is the setting procedure for making the 12-bit D/A converter operate and output a conversion result to the DAx pin.

1. Set the operation mode using DAC10 and DDAS in the D/A Control register (DACR), and set the DAE bit to 1.
2. Wait until the DRDY bit in the D/A Control register (DACR) becomes 1.
3. Write to the D/A Data register (DADR) the digital value to be converted into an analog value.

After the above settings have been completed, an analog value is output from the DAx pin.

Notes:

- *After DAE in the D/A Control register (DACR) has been set to 1, the output of the DAx pin is indeterminate until a digital value is written to the D/A Data register (DADR).*

5. Registers

This section explains the configuration and functions of registers used in the 12-bit D/A converter.

List of 12-bit D/A Converter Registers

Abbreviation	Register Name	Reference
DACR	D/A Control register	5.1
DADR	D/A Data register	5.2

5.1 D/A Control Register (DACR)

The D/A Control register (DACR) controls the operation of the 12-bit D/A converter.

bit	23	22	21	20	19	18	17	16
Field	Reserved		DDAS	DAC10	Reserved		DRDY	DAE
Attribute	-		R/W	R/W	-		R	R/W
Initial value	XX		0	0	XX		0	0

[bit23:22] Reserved: Reserved bits

The read value is indeterminate.

Writing a value to a reserved bit has no effect on operation.

[bit21] DDAS: 10-bit mode data allocation selection bit

In 10-bit mode, DDAS selects the conversion target bits in the D/A Data register (DADR).

In 12-bit mode, regardless of the setting of this bit, DA[11:0] in the D/A Data register (DADR) are selected as the conversion target bits.

bit	Description
0	DA[11:2] in the D/A Data register (DADR)
1	DA[9:0] in the D/A Data register (DADR)

[bit20] DAC10: 10-bit mode

DAC switches the operation mode of the 12-bit D/A converter between 10-bit mode and 12-bit mode.

bit	Description
0	12-bit mode
1	10-bit mode

[bit19:18] Reserved: Reserved bits

The read value is indeterminate.

Writing a value to a reserved bit has no effect on operation.

[bit17] DRDY: D/A converter operation enable state bit

bit	Description
0	Operation stop state
1	Operation enable state

[bit16] DAE: D/A converter operating enable bit

bit	Description
0	Stops the operation of the D/A converter.
1	Enables the operation of the D/A converter.

5.2 D/A Data Register (DADR)

The D/A Data Register sets the digital value to be converted into analog signal.

bit	15	14	13	12	11	10	9	8
Field	Reserved				DA[11:8]			
Attribute	-				R/W			
Initial value	XXXX				XXXX			

bit	7	6	5	4	3	2	1	0
Field	DA[7:0]							
Attribute	R/W							
Initial value	0xXX							

[bit15:12] Reserved: Reserved bits

The read value is indeterminate.

Writing a value to a reserved bit has no effect on operation.

[bit11:0] DA[11:0]: D/A Data Register

The 12-bit D/A converter executes D/A conversion immediately after a value has been written to DA[11:0].

In 10-bit mode, write 0 to an unused bit.

See Table 3-2 for the relation between the setting of this register and the output voltage.

Appendixes

This chapter shows the register map, list of notes, limitations and product type list.

A. Register Map

B. List of Notes

A. Register Map

This chapter shows the register map.

1. Register Map

1.1 FLASH_IF
1.2 Unique ID
1.3 ECC Capture Address
1.4 Clock/Reset
1.5 HW WDT
1.6 SW WDT
1.7 Dual_Timer
1.8 MFT
1.9 PPG
1.10 Base Timer
1.11 IO Selector for Base Timer
1.12 QPRC
1.13 QPRC NF
1.14 A/DC
1.15 CR Trim
1.16 EXTI
1.17 INT-Req. READ
1.18 D/AC
1.19 HDMI-CEC
1.20 GPIO
1.21 LVD
1.22 DS_Mode
1.23 USB Clock
1.24 CAN_Prescaler
1.25 MFS
1.26 CRC
1.27 Watch Counter
1.28 RTC
1.29 Low-speed CR Prescaler
1.30 Peripheral Clock Gating
1.31 Smart Card Interface
1.32 MFSI2S
1.33 I2S Prescaler
1.34 GDC_Prescaler
1.35 EXT-Bus I/F

1.36 USB
1.37 DMAC
1.38 DSTC
1.39 CAN
1.40 Ethernet-MAC
1.41 Ethernet-Control
1.42 I2S
1.43 SD-Card
1.44 CAN FD
1.45 Programmable-CRC
1.46 WorkFlash_IF
1.47 High-Speed Quad SPI Controller
1.48 HyperBus Interface
1.49 GDC Sub System Controller
1.50 GDC Sub System SDRAM Controller

1. Register Map

Register map is shown on the table every module/function.

[How to read the each table]

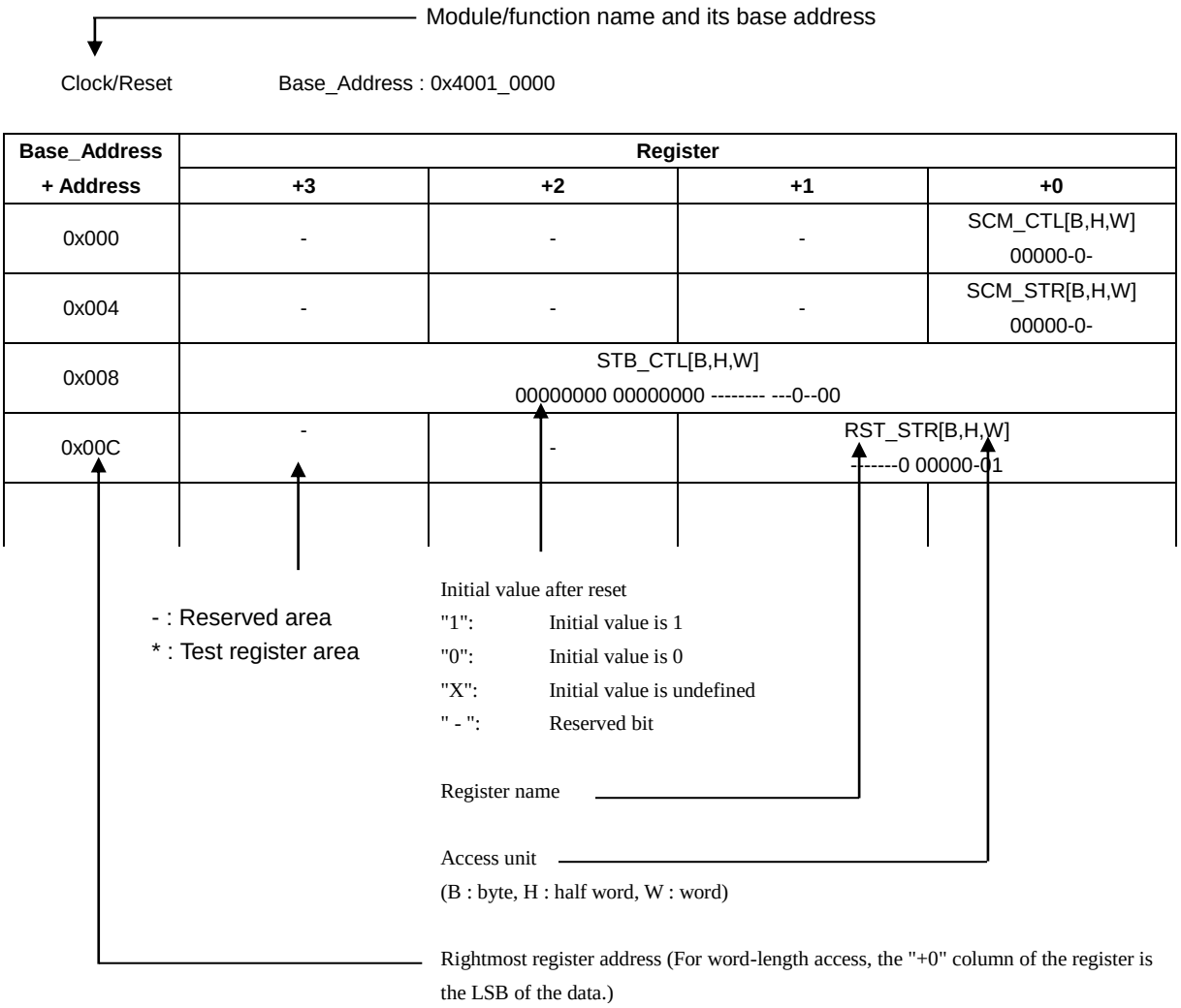

Notes:

- *The register table is represented in the little-endian.*
- *When performing a data access, the addresses should be as below according to the access size.*
- *Word access: Address should be multiples of 4 (least significant 2 bits should be 0x00)*
- *Half word access: Address should be multiples of 2 (least significant bit should be 0x0)*
- *Byte access: -*
- *Do not access the test register area.*
- *Do not access the area that is not written in the register table.*
- *When the register is accessed by larger unit than register size, for the reserved area to access at the same time, the read value is undefined, and writing is invalid.*

1.1 FLASH_IF

1.1.1 TYPE1-M4, TYPE2-M4 Products

FLASH_IF Base_Address : 0x4000_0000

Base_Address + Address	Register			
	+3	+2	+1	+0
0x000	FASZR[B,H,W]			
0x004	FRWTR[B,H,W]			
0x008	FSTR[B,H,W]			
0x00C	*			
0x010	FSYNDN[B,H,W]			
0x014	FBFCR[B,H,W]			
0x018 - 0x01C	-	-	-	-
0x020	FICR[B,H,W]			
0x024	FISR[B,H,W]			
0x028	FICLR[B,H,W]			
0x02C - 0x0FC	-	-	-	-
0x100	CRTRMM[B,H,W]			
0x104 - 0x1FC	-	-	-	-

Note:

- *For details of Flash I/F registers, see Flash Programming Manual of the product used.*

1.1.2 TYPE3-M4 Product

FLASH_IF Base_Address : 0x4000_0000

Base_Address + Address	Register			
	+3	+2	+1	+0
0x000	FASZR[B,H,W]			
0x004	FRWTR[B,H,W]			
0x008	FSTR[B,H,W]			
0x00C	*			
0x010	FSYNDN[B,H,W]			
0x014	FBFCR[B,H,W]			
0x018 - 0x01C	-	-	-	-
0x020	FICR[B,H,W]			
0x024	FISR[B,H,W]			
0x028	FICLR[B,H,W]			
0x02C	-	-	-	-
0x030	DFCTRLR[W]			
0x034 - 0x0FC	-	-	-	-
0x100	CRTRMM[B,H,W]			
0x104 - 0x10C	-	-	-	-
0x110	FGPDM1[B,H,W]			
0x114	FGPDM2[B,H,W]			
0x118	FGPDM3[B,H,W]			
0x11C	FGPDM4[B,H,W]			
0x120 - 0x1FC	-	-	-	-

Base_Address + Address	Register			
	+3	+2	+1	+0
0x400	DFASZR[B,H,W]			
0x404	DFRWTR[B,H,W]			
0x408	DFSTR[B,H,W]			
0x40C - 0x4FC	-	-	-	-

Note:

- *For details of Flash I/F registers, see Flash Programming Manual of the product used.*

1.1.3 TYPE4-M4, TYPE5-M4, TYPE6-M4 Products

FLASH_IF Base_Address : 0x4000_0000

Base_Address + Address	Register			
	+3	+2	+1	+0
0x000	FASZR[B,H,W]			
0x004	FRWTR[B,H,W]			
0x008	FSTR[B,H,W]			
0x00C	*			
0x010	FSYNDN[B,H,W]			
0x014	FBFCR[B,H,W]			
0x018 - 0x01C	-	-	-	-
0x020	FICR[B,H,W]			
0x024	FISR[B,H,W]			
0x028	FICLR[B,H,W]			
0x02C - 0x0FC	-	-	-	-
0x100	CRTRMM[B,H,W]			
0x104 - 0x10C	-	-	-	-
0x110	FGPDM1[B,H,W]			
0x114	FGPDM2[B,H,W]			
0x118	FGPDM3[B,H,W]			
0x11C	FGPDM4[B,H,W]			
0x120 - 0x1FC	-			

Note:

- *For details of Flash I/F registers, see Flash Programming Manual of the product used.*

1.2 Unique ID

Unique ID Base_Address : 0x4000_0200

Base_Address + Address	Register			
	+3	+2	+1	+0
0x000	UIDR0[W] XXXXXXXX XXXXXXXX XXXXXXXX XXXX----			
0x004	UIDR1[W]			
	-------- -------- ---XXXXX XXXXXXXX			
0x008 - 0xDFC	-	-	-	-

1.3 ECC Capture Address

ECC Capture Address Base_Address : 0x4000_0300

Base_Address + Address	Register			
	+3	+2	+1	+0
0x000	FERRAD[W] -------- -XXXXXXX XXXXXXXX XXXXXXXX			
0x004 - 0xFFC	-	-	-	-

1.4 Clock/Reset

1.4.1 TYPE1-M4, TYPE2-M4 Products

Clock/Reset Base_Address : 0x4001_0000

Base_Address + Address	Register			
	+3	+2	+1	+0
0x000	-	-	-	SCM_CTL[W] 00000-0-
0x004	-	-	-	SCM_STR[W] 00000-0-
0x008	STB_CTL[W] 00000000 00000000 -------- ---0-000			
0x00C	-	-	RST_STR[W] -------0 0000--01	
0x010	-	-	-	BSC_PSR[W] -----000
0x014	-	-	-	APBC0_PSR[W] ------00
0x018	-	-	-	APBC1_PSR[W] 1--0--00
0x01C	-	-	-	APBC2_PSR[W] 1--0--00
0x020	-	-	-	SWC_PSR[W] ------00
0x024 – 0x027	-	-	-	-
0x028	-	-	-	TTC_PSR[W] ------00
0x02C – 0x02F	-	-	-	-
0x030	-	-	-	CSW_TMR[W] 00000000
0x034	-	-	-	PSW_TMR[W] ---0-000
0x038	-	-	-	PLL_CTL1[W] 00000000
0x03C	-	-	-	PLL_CTL2[W] --000000
0x040	-	-	CSV_CTL[W] -111--00 ------11	
0x044	-	-	-	CSV_STR[W] ------00
0x048	-	-	FCSWH_CTL[W] 11111111 11111111	
0x04C	-	-	FCSWL_CTL[W] 00000000 00000000	

A. Register Map

Base_Address + Address	Register			
	+3	+2	+1	+0
0x050	-	-	FCSWD_CTL[W] 00000000 00000000	
0x054	-	-	-	DBWDT_CTL[W] 0-0-----
0x058	-	-	-	*
0x05C - 0x05F	-	-	-	-
0x060	-	-	-	INT_ENR[W] --0--000
0x064	-	-	-	INT_STR[W] --0–000
0x068	-	-	-	INT_CLR[W] --0--000
0x06C – 0xFFC	-	-	-	-

1.4.2 TYPE3-M4, TYPE4-M4, TYPE5-M4, TYPE6-M4 Products

Clock/Reset Base_Address : 0x4001_0000

Base_Address + Address	Register			
	+3	+2	+1	+0
0x000	-	-	-	SCM_CTL[W] 00000-0-
0x004	-	-	-	SCM_STR[W] 00000-0-
0x008	STB_CTL[W] 00000000 00000000 -------- ---0-000			
0x00C	-	-	RST_STR[W] -------0 0000--01	
0x010	-	-	-	BSC_PSR[W] -----000
0x014	-	-	-	APBC0_PSR[W] ------00
0x018	-	-	-	APBC1_PSR[W] 1--0--00
0x01C	-	-	-	APBC2_PSR[W] 1--0--00
0x020	-	-	-	SWC_PSR[W] ------00
0x024 – 0x027	-	-	-	-
0x028	-	-	-	TTC_PSR[W] ------00
0x02C – 0x02F	-	-	-	-
0x030	-	-	-	CSW_TMR[W] 00000000
0x034	-	-	-	PSW_TMR[W] ---0-000
0x038	-	-	-	PLL_CTL1[W] 00000000
0x03C	-	-	-	PLL_CTL2[W] --000000
0x040	-	-	CSV_CTL[W] -111--00 ------11	
0x044	-	-	-	CSV_STR[W] ------00
0x048	-	-	FCSWH_CTL[W] 11111111 11111111	
0x04C	-	-	FCSWL_CTL[W] 00000000 00000000	

A. Register Map

Base_Address + Address	Register			
	+3	+2	+1	+0
0x050	-	-	FCSWD_CTL[W] 00000000 00000000	
0x054	-	-	-	DBWDT_CTL[W] 0-0-----
0x058	-	-	-	*
0x05C - 0x05F	-	-	-	-
0x060	-	-	-	INT_ENR[W] --0--000
0x064	-	-	-	INT_STR[W] --0–000
0x068	-	-	-	INT_CLR[W] --0--000
0x06C – 0x070	-	-	-	-
0x074	PLLCG_CTL[W] -------- 11111111 00000000 00----00			
0x078 – 0xFFC	-	-	-	-

1.5 HW WDT

HW WDT Base_Address : 0x4001_1000

Base_Address + Address	Register			
	+3	+2	+1	+0
0x000	WDG_LDR[W] 00000000 00000000 11111111 11111111			
0x004	WDG_VLR[W] XXXXXXXX XXXXXXXX XXXXXXXX XXXXXXXX			
0x008	-	-	-	WDG_CTL[W] ------11
0x00C	-	-	-	WDG_ICL[W] XXXXXXXX
0x010	-	-	-	WDG_RIS[W] -------0
0x014	*			
0x018 – 0xBFC	-	-	-	-
0xC00	WDG_LCK[W] 00000000 00000000 00000000 00000001			
0xC04 – 0xFFC	-	-	-	-

1.6 SW WDT

SW WDT Base_Address : 0x4001_2000

Base_Address + Address	Register			
	+3	+2	+1	+0
0x000	WdogLoad[W] 11111111 11111111 11111111 11111111			
0x004	WdogValue[W] 11111111 11111111 11111111 11111111			
0x008	-	-	-	WdogControl[W] ---00000
0x00C	WdogIntClr[W] XXXXXXXX XXXXXXXX XXXXXXXX XXXXXXXX			
0x010	-	-	-	WdogRIS[W] -------0
0x014	*			
0x018	-	-	-	WdogSPMC[W] -------0
0x01C – 0xBFC	-	-	-	-
0xC00	WdogLock[W] 00000000 00000000 00000000 00000000			
0xC04 - 0xDFC	-	-	-	-
0xF00 - 0xF04	*			
0xF08 - 0xFDF	-	-	-	-
0xFE0 - 0xFFC	*			

1.7 Dual_Timer

Dual_Timer Base_Address : 0x4001_5000

Base_Address + Address	Register			
	+3	+2	+1	+0
0x000	Timer1Load[W] 00000000 00000000 00000000 00000000			
0x004	Timer1Value[W] 11111111 11111111 11111111 11111111			
0x008	Timer1Control[W] -------- -------- -------- 00100000			
0x00C	Timer1IntClr[W] XXXXXXXX XXXXXXXX XXXXXXXX XXXXXXXX			
0x010	Timer1RIS[W] -------- -------- -------- -------0			
0x014	Timer1MIS[W] -------- -------- -------- -------0			
0x018	Timer1BGLoad[W] 00000000 00000000 00000000 00000000			
0x020	Timer2Load[W] 00000000 00000000 00000000 00000000			
0x024	Timer2Value[W] 11111111 11111111 11111111 11111111			
0x028	Timer2Control[W] -------- -------- -------- 00100000			
0x02C	Timer2IntClr[W] XXXXXXXX XXXXXXXX XXXXXXXX XXXXXXXX			
0x030	Timer2RIS[W] -------- -------- -------- -------0			
0x034	Timer2MIS[W] -------- -------- -------- -------0			
0x038	Timer2BGLoad[W] 00000000 00000000 00000000 00000000			
0x040 - 0xFFC	-	-	-	-

1.8 MFT

1.8.1 TYPE1-M4, TYPE2-M4 Products

MFT unit0 Base_Address : 0x4002_0000

MFT unit1 Base_Address : 0x4002_1000

MFT unit2 Base_Address : 0x4002_2000

Base_Address + Address	Register			
	+3	+2	+1	+0
0x100	OCCP0[H,W] 00000000 00000000		-	-
0x104	OCCP1[H,W] 00000000 00000000		-	-
0x108	OCCP2[H,W] 00000000 00000000		-	-
0x10C	OCCP3[H,W] 00000000 00000000		-	-
0x110	OCCP4[H,W] 00000000 00000000		-	-
0x114	OCCP5[H,W] 00000000 00000000		-	-
0x118	-	OCSD10[B,H,W] 00000000	OCSB10[B,H,W] 00000000	OCSA10[B,H,W] 00000000
0x11C	-	OCSD32[B,H,W] 00000000	OCSB32[B,H,W] 00000000	OCSA32[B,H,W] 00000000
0x120	-	OCSD54[B,H,W] 00000000	OCSB54[B,H,W] 00000000	OCSA54[B,H,W] 00000000
0x124	-	-	OCSC[B,H,W] --000000	-
0x128	-	-	OCSE0[B,H,W] 00000000 00000000	
0x12C	OCSE1[B,H,W] 00000000 00000000 00000000 00000000			
0x130	-	-	OCSE2[B,H,W] 00000000 00000000	
0x134	OCSE3[B,H,W] 00000000 00000000 00000000 00000000			
0x138	-	-	OCSE4[B,H,W] 00000000 00000000	
0x13C	OCSE5[B,H,W] 00000000 00000000 00000000 00000000			
0x140	TCCP0[H,W] 11111111 11111111		-	-
0x144	TCDT0[H,W] 00000000 00000000		-	-
0x148	TCSC0[H,W] 00000000 00000000		TCSA0[B,H,W] 00000000 01000000	

Base_Address + Address	Register			
	+3	+2	+1	+0
0x14C	TCCP1[H,W] 11111111 11111111		-	-
0x150	TCDT1[H,W] 00000000 00000000		-	-
0x154	TCSC1[H,W] 00000000 00000000		TCSA1[B,H,W] 00000000 01000000	
0x158	TCCP2[H,W] 11111111 11111111		-	-
0x15C	TCDT2[H,W] 00000000 00000000		-	-
0x160	TCSC2[H,W] 00000000 00000000		TCSA2[B,H,W] 00000000 01000000	
0x164	TCAL[W] 00000000 00000000 11111111 11111111 *1			
	-	-	-	- *2
	*1 MFT unit0 *2 MFT unit1,unit2			
0x168	-	OCFS54[B,H,W] 00000000	OCFS32[B,H,W] 00000000	OCFS10[B,H,W] 00000000
0x16C	-	-	ICFS32[B,H,W] 00000000	ICFS10[B,H,W] 00000000
0x170	-	ACFS54[B,H,W] 00000000	ACFS32[B,H,W] 00000000	ACFS10[B,H,W] 00000000
0x174	ICCP0[H,W] 00000000 00000000		-	-
0x178	ICCP1[H,W] 00000000 00000000		-	-
0x17C	ICCP2[H,W] 00000000 00000000		-	-
0x180	ICCP3[H,W] 00000000 00000000		-	-
0x184	-	-	ICSB10[B,H,W] ------00	ICSA10[B,H,W] 00000000
0x188			ICSB32[B,H,W] ------00	ICSA32[B,H,W] 00000000
0x18C	WFTF10[H,W] 00000000 00000000		-	-
0x190	WFTB10[H,W] 00000000 00000000		WFTA10[H,W] 00000000 00000000	
0x194	WFTF32[H,W] 00000000 00000000		-	-
0x198	WFTB32[H,W] 00000000 00000000		WFTA32[H,W] 00000000 00000000	

Base_Address + Address	Register			
	+3	+2	+1	+0
0x19C	WFTF54[H,W] 00000000 00000000		-	-
0x1A0	WFTB54[H,W] 00000000 00000000		WFTA54[H,W] 00000000 00000000	
0x1A4	-		-	WFSA10[B,H,W] --000000 000000
0x1A8	-		-	WFSA32[B,H,W] --000000 000000
0x1AC	-		-	WFSA54[B,H,W] --000000 000000
0x1B0	-		-	WFIR[H,W] 00000000 00000000
0x1B4	-		-	NZCL[H,W] 00000000 00000000
0x1B8	ACMP0[H,W] 00000000 00000000		-	-
0x1BC	ACMP1[H,W] 00000000 00000000		-	-
0x1C0	ACMP2[H,W] 00000000 00000000		-	-
0x1C4	ACMP3[H,W] 00000000 00000000		-	-
0x1C8	ACMP4[H,W] 00000000 00000000		-	-
0x1CC	ACMP5[H,W] 00000000 00000000		-	-
0x1D0	-	-	ACSA[B,H,W] 00000000 00000000	
0x1D4	-	-	ACSD0[B,H,W] 00000000	ACSC0[B,H,W] 00000000
0x1D8	-	-	ACSD1[B,H,W] 00000000	ACSC1[B,H,W] 00000000
0x1DC	-	-	ACSD2[B,H,W] 00000000	ACSC2[B,H,W] 00000000
0x1E0	-	-	ACSD3[B,H,W] 00000000	ACSC3[B,H,W] 00000000
0x1E4	-	-	ACSD4[B,H,W] 00000000	ACSC4[B,H,W] 00000000
0x1E8	-	-	ACSD5[B,H,W] 00000000	ACSC5[B,H,W] 00000000
0x1EC-0xFFC	-	-	-	-

1.8.2 TYPE3-M4, TYPE4-M4, TYPE5-M4, TYPE6-M4 Products

MFT unit0 **Base_Address : 0x4002_0000**

MFT unit1 **Base_Address : 0x4002_1000**

MFT unit2 **Base_Address : 0x4002_2000**

Base_Address + Address	Register			
	+3	+2	+1	+0
0x100	OCCP0[H,W] 00000000 00000000		-	-
0x104	OCCP1[H,W] 00000000 00000000		-	-
0x108	OCCP2[H,W] 00000000 00000000		-	-
0x10C	OCCP3[H,W] 00000000 00000000		-	-
0x110	OCCP4[H,W] 00000000 00000000		-	-
0x114	OCCP5[H,W] 00000000 00000000		-	-
0x118	OCSD10[B,H,W] --000000 00000000		OCSB10[B,H,W] 00000000	OCSA10[B,H,W] 00000000
0x11C	OCSD32[B,H,W] --000000 00000000		OCSB32[B,H,W] 00000000	OCSA32[B,H,W] 00000000
0x120	OCSD54[B,H,W] --000000 00000000		OCSB54[B,H,W] 00000000	OCSA54[B,H,W] 00000000
0x124	-	-	OCSC[B,H,W] --000000	-
0x128	-	-	OCSE0[B,H,W] 00000000 00000000	
0x12C	OCSE1[B,H,W] 00000000 00000000 00000000 00000000			
0x130	-	-	OCSE2[B,H,W] 00000000 00000000	
0x134	OCSE3[B,H,W] 00000000 00000000 00000000 00000000			
0x138	-	-	OCSE4[B,H,W] 00000000 00000000	
0x13C	OCSE5[B,H,W] 00000000 00000000 00000000 00000000			
0x140	TCCP0[H,W] 11111111 11111111		-	-
0x144	TCDT0[H,W] 00000000 00000000		-	-
0x148	TCSC0[H,W] 00000000 00000000		TCSA0[B,H,W] 00000000 01000000	
0x14C	TCCP1[H,W] 11111111 11111111		-	-

Base_Address + Address	Register			
	+3	+2	+1	+0
0x150	TCDT1[H,W] 00000000 00000000		-	-
0x154	TCSC1[H,W] 00000000 00000000		TCSA1[B,H,W] 00000000 01000000	
0x158	TCCP2[H,W] 11111111 11111111		-	-
0x15C	TCDT2[H,W] 00000000 00000000		-	-
0x160	TCSC2[H,W] 00000000 00000000		TCSA2[B,H,W] 00000000 01000000	
0x164	TCAL[W] 00000000 00000000 11111111 11111111 *1			
	-	-	-	- *2
	*1 MFT unit0 *2 MFT unit1,unit2			
0x168	-	OCFS54[B,H,W] 00000000	OCFS32[B,H,W] 00000000	OCFS10[B,H,W] 00000000
0x16C	-	-	ICFS32[B,H,W] 00000000	ICFS10[B,H,W] 00000000
0x170	-	ACFS54[B,H,W] 00000000	ACFS32[B,H,W] 00000000	ACFS10[B,H,W] 00000000
0x174	ICCP0[H,W] 00000000 00000000		-	-
0x178	ICCP1[H,W] 00000000 00000000		-	-
0x17C	ICCP2[H,W] 00000000 00000000		-	-
0x180	ICCP3[H,W] 00000000 00000000		-	-
0x184	-	-	ICSB10[B,H,W] ------00	ICSA10[B,H,W] 00000000
0x188			ICSB32[B,H,W] ------00	ICSA32[B,H,W] 00000000
0x18C	WFTF10[H,W] 00000000 00000000		-	-
0x190	WFTB10[H,W] 00000000 00000000		WFTA10[H,W] 00000000 00000000	
0x194	WFTF32[H,W] 00000000 00000000		-	-
0x198	WFTB32[H,W] 00000000 00000000		WFTA32[H,W] 00000000 00000000	
0x19C	WFTF54[H,W] 00000000 00000000		-	-

Base_Address + Address	Register			
	+3	+2	+1	+0
0x1A0	WFTB54[H,W] 00000000 00000000		WFTA54[H,W] 00000000 00000000	
0x1A4	-	-	WFSA10[B,H,W] --000000 000000	
0x1A8	-	-	WFSA32[B,H,W] --000000 000000	
0x1AC	-	-	WFSA54[B,H,W] --000000 000000	
0x1B0	-	-	WFIR[H,W] 00000000 00000000	
0x1B4	-	-	NZCL[H,W] 00000000 00000000	
0x1B8	ACMP0[H,W] 00000000 00000000		-	-
0x1BC	ACMP1[H,W] 00000000 00000000		-	-
0x1C0	ACMP2[H,W] 00000000 00000000		-	-
0x1C4	ACMP3[H,W] 00000000 00000000		-	-
0x1C8	ACMP4[H,W] 00000000 00000000		-	-
0x1CC	ACMP5[H,W] 00000000 00000000		-	-
0x1D0	-	-	ACSA[B,H,W] 00000000 00000000	
0x1D4	-	ACMC0[B,H,W] 00--0000	ACSD0[B,H,W] 00000000	ACSC0[B,H,W] 00000000
0x1D8	-	ACMC1[B,H,W] 00--0000	ACSD1[B,H,W] 00000000	ACSC1[B,H,W] 00000000
0x1DC	-	ACMC2[B,H,W] 00--0000	ACSD2[B,H,W] 00000000	ACSC2[B,H,W] 00000000
0x1E0	-	ACMC3[B,H,W] 00--0000	ACSD3[B,H,W] 00000000	ACSC3[B,H,W] 00000000
0x1E4	-	ACMC4[B,H,W] 00--0000	ACSD4[B,H,W] 00000000	ACSC4[B,H,W] 00000000
0x1E8	-	ACMC5[B,H,W] 00--0000	ACSD5[B,H,W] 00000000	ACSC5[B,H,W] 00000000
0x1EC	-	-	-	TCSD[B,H,W] ------00
0x1F0-0xFFC	-	-	-	-

1.9 PPG

PPG Base_Address : 0x4002_4000

Base_Address + Address	Register			
	+3	+2	+1	+0
0x000	-	-	TTCR0 [B,H,W] 11110000	-
0x004	-	-	-	*
0x008	-	-	COMP0 [B,H,W] 00000000	-
0x00C	-	-	-	COMP2 [B,H,W] 00000000
0x010	-	-	COMP4 [B,H,W] 00000000	-
0x014	-	-	-	COMP6 [B,H,W] 00000000
0x018 - 0x01C	-	-	-	-
0x020	-	-	TTCR1 [B,H,W] 11110000	-
0x024	-	-	-	*
0x028	-	-	COMP1 [B,H,W] 00000000	-
0x02C	-	-	-	COMP3 [B,H,W] 00000000
0x030	-	-	COMP5 [B,H,W] 00000000	-
0x034	-	-	-	COMP7 [B,H,W] 00000000
0x038 - 0x03C	-	-	-	-
0x040	-	-	TTCR2 [B,H,W] 11110000	-
0x044	-	-	-	*
0x048	-	-	COMP8 [B,H,W] 00000000	-
0x04C	-	-	-	COMP10 [B,H,W] 00000000
0x050	-	-	COMP12 [B,H,W] 00000000	-
0x054	-	-	-	COMP14 [B,H,W] 00000000
0x058 - 0x0FC	-	-	-	-
0x100	-	-	TRG0 [B,H,W] 00000000 00000000	
0x104	-	-	REVC0 [B,H,W] 00000000 00000000	
0x108 - 0x13C	-	-	-	-
0x140	-	-	TRG1 [B,H,W] -------- 00000000	
0x144	-	-	REVC1 [B,H,W] -------- 00000000	
0x148 - 0x1FC	-	-	-	-

Base_Address + Address	Register			
	+3	+2	+1	+0
0x200	-	-	PPGC0 [B,H,W] 00000000	PPGC1 [B,H,W] 00000000
0x204	-	-	PPGC2 [B,H,W] 00000000	PPGC3 [B,H,W] 00000000
0x208	-	-	PRLH0 [B,H,W] XXXXXXXX	PRLL0 [B,H,W] XXXXXXXX
0x20C	-	-	PRLH1 [B,H,W] XXXXXXXX	PRLL1 [B,H,W] XXXXXXXX
0x210	-	-	PRLH2 [B,H,W] XXXXXXXX	PRLL2 [B,H,W] XXXXXXXX
0x214	-	-	PRLH3 [B,H,W] XXXXXXXX	PRLL3 [B,H,W] XXXXXXXX
0x218	-	-	-	GATEC0 [B,H,W] --00---00
0x21C - 0x23C	-	-	-	-
0x240	-	-	PPGC4 [B,H,W] 00000000	PPGC5 [B,H,W] 00000000
0x244	-	-	PPGC6 [B,H,W] 00000000	PPGC7 [B,H,W] 00000000
0x248	-	-	PRLH4 [B,H,W] XXXXXXXX	PRLL4 [B.H.W] XXXXXXXX
0x24C	-	-	PRLH5 [B,H,W] XXXXXXXX	PRLL5 [B,H,W] XXXXXXXX
0x250	-	-	PRLH6 [B,H,W] XXXXXXXX	PRLL6 [B,H,W] XXXXXXXX
0x254	-	-	PRLH7 [B,H,W] XXXXXXXX	PRLL7 [B,H,W] XXXXXXXX
0x258	-	-	-	GATEC4 [B,H,W] ------00
0x25C - 0x27C	-	-	-	-
0x280	-	-	PPGC8 [B,H,W] 00000000	PPGC9 [B,H,W] 00000000
0x284	-	-	PPGC10 [B,H,W] 00000000	PPGC11 [B,H,W] 00000000
0x288	-	-	PRLH8 [B,H,W] XXXXXXXX	PRLL8 [B,H,W] XXXXXXXX
0x28C	-	-	PRLH9 [B,H,W] XXXXXXXX	PRLL9 [B,H,W] XXXXXXXX
0x290	-	-	PRLH10 [B,H,W] XXXXXXXX	PRLL10 [B,H,W] XXXXXXXX
0x294	-	-	PRLH11 [B,H,W] XXXXXXXX	PRLL11 [B,H,W] XXXXXXXX
0x298	-	-	-	GATEC8 [B,H,W] --00--00
0x29C - 0x2BC	-	-	-	-
0x2C0	-	-	PPGC12 [B,H,W] 00000000	PPGC13 [B,H,W] 00000000

Base_Address + Address	Register			
	+3	+2	+1	+0
0x2C4	-	-	PPGC14 [B,H,W] 00000000	PPGC15 [B,H,W] 00000000
0x2C8	-	-	PRLH12 [B,H,W] XXXXXXXX	PRLL12 [B,H,W] XXXXXXXX
0x2CC	-	-	PRLH13 [B,H,W] XXXXXXXX	PRLL13 [B,H,W] XXXXXXXX
0x2D0	-	-	PRLH14 [B,H,W] XXXXXXXX	PRLL14 [B,H,W] XXXXXXXX
0x2D4	-	-	PRLH15 [B,H,W] XXXXXXXX	PRLL15 [B,H,W] XXXXXXXX
0x2D8	-	-	-	GATEC12 [B,H,W] ------00
0x2DC - 0x2FC	-	-	-	-
0x300	-	-	PPGC16 [B,H,W] 00000000	PPGC17 [B,H,W] 00000000
0x304	-	-	PPGC18 [B,H,W] 00000000	PPGC19 [B,H,W] 00000000
0x308	-	-	PRLH16 [B,H,W] XXXXXXXX	PRLL16 [B,H,W] XXXXXXXX
0x30C	-	-	PRLH17 [B,H,W] XXXXXXXX	PRLL17 [B,H,W] XXXXXXXX
0x310	-	-	PRLH18 [B,H,W] XXXXXXXX	PRLL18 [B,H,W] XXXXXXXX
0x314	-	-	PRLH19 [B,H,W] XXXXXXXX	PRLL19 [B,H,W] XXXXXXXX
0x318	-	-	-	GATEC16 [B,H,W] --00---00
0x31C - 0x33C	-	-	-	-
0x340	-	-	PPGC20 [B,H,W] 00000000	PPGC21 [B,H,W] 00000000
0x344	-	-	PPGC22 [B,H,W] 00000000	PPGC23 [B,H,W] 00000000
0x348	-	-	PRLH20 [B,H,W] XXXXXXXX	PRLL20 [B.H.W] XXXXXXXX
0x34C	-	-	PRLH21 [B,H,W] XXXXXXXX	PRLL21 [B,H,W] XXXXXXXX
0x350	-	-	PRLH22 [B,H,W] XXXXXXXX	PRLL22 [B,H,W] XXXXXXXX
0x354	-	-	PRLH23 [B,H,W] XXXXXXXX	PRLL23 [B,H,W] XXXXXXXX
0x358	-	-	-	GATEC20 [B,H,W] ------00
0x35C - 0x37C	-	-	-	-
0x380	-	-	-	-
0x384 - 0xFFC	-	-	-	-

1.10 Base Timer

Base Timer ch.0 Base Address : 0x4002_5000
Base Timer ch.1 Base Address : 0x4002_5040
Base Timer ch.2 Base Address : 0x4002_5080
Base Timer ch.3 Base Address : 0x4002_50C0
Base Timer ch.4 Base Address : 0x4002_5200
Base Timer ch.5 Base Address : 0x4002_5240
Base Timer ch.6 Base Address : 0x4002_5280
Base Timer ch.7 Base Address : 0x4002_52C0
Base Timer ch.8 Base Address : 0x4002_5400
Base Timer ch.9 Base Address : 0x4002_5440
Base Timer ch.10 Base Address : 0x4002_5480
Base Timer ch.11 Base Address : 0x4002_54C0
Base Timer ch.12 Base Address : 0x4002_5600
Base Timer ch.13 Base Address : 0x4002_5640
Base Timer ch.14 Base Address : 0x4002_5680
Base Timer ch.15 Base Address : 0x4002_56C0

Base_Address + Address	Register			
	+3	+2	+1	+0
0x000	-	-	PCSR/PRLL [H,W] XXXXXXXX XXXXXXXX	
0x004	-	-	PDUT/PRLH/DTBF [H,W] XXXXXXXX XXXXXXXX	
0x008	-	-	TMR [H,W] 00000000 00000000	
0x00C	-	-	TMCR [B,H,W] -0000000 00000000	
0x010	-	-	TMCR2 [B,H,W] 0------0	STC [B,H,W] 0000-000
0x014 - 0x03C	-	-	-	-

1.11 IO Selector for Base Timer

IO Selector for ch.0-ch.3 (Base Timer) Base Address : 0x4002_5100

Base_Address + Address	Register			
	+3	+2	+1	+0
0x000	-	-	BTSEL0123 [B,H,W] 00000000	-
0x004 - 0x0FC	-	-	-	-

IO Selector for ch.4-ch.7(Base Timer)Base Address : 0x4002_5300

Base_Address + Address	Register			
	+3	+2	+1	+0
0x000	-	-	BTSEL4567 [B,H,W] 00000000	-
0x004 - 0x0FC	-	-	-	-

IO Selector for ch.8-ch.11(Base Timer) Base Address : 0x4002_5500

Base_Address + Address	Register			
	+3	+2	+1	+0
0x000	-	-	BTSEL89AB [B,H,W] 00000000	-
0x004 - 0x0FC	-	-	-	-

IO Selector for ch.12-ch.15(Base Timer) Base Address : 0x4002_5700

Base_Address + Address	Register			
	+3	+2	+1	+0
0x000	-	-	BTSELCDEF [B,H,W] 00000000	-
0x004 - 0x0FC	-	-	-	-

Software-based Simultaneous Startup(Base Timer) Base Address : 0x4002_5F00

Base_Address + Address	Register			
	+3	+2	+1	+0
0x000 - 0x0FB	-	-	-	-
0x0FC	-	-	BTSSSR [B,H,W] XXXXXXXX XXXXXXXX	

1.12 QPRC

1.12.1 TYPE1-M4, TYPE2-M4, TYPE6-M4 Products

QPRC ch.0 **Base Address : 0x4002_6000**

QPRC ch.1 **Base Address : 0x4002_6040**

QPRC ch.2 **Base Address : 0x4002_6080**

QPRC ch.3 **Base Address : 0x4002_60C0**

Base_Address + Address	Register			
	+3	+2	+1	+0
0x0000	-	-	QPCR [H,W] 00000000 00000000	
0x0004	-	-	QRCR [H,W] 00000000 00000000	
0x0008	-	-	QPCCR [H,W] 00000000 00000000	
0x000C	-	-	QPRCR [H,W] 00000000 00000000	
0x0010	-	-	QMPR [H,W] 11111111 11111111	
0x0014	-	-	QICRH [B,H,W] --000000	QICRL [B,H,W] 00000000
0x0018	-	-	QCRH [B,H,W] 00000000	QCRL [B,H,W] 00000000
0x001C	-	-	QECR [B,H,W] -------- -----000	
0x0020 - 0x003B	-	-	-	-
0x003C	QPCRR[B,H,W] 00000000 00000000		QRCRR[B,H,W] 00000000 00000000	

1.12.2 TYPE3-M4, TYPE4-M4, TYPE5-M4 Products

QPRC ch.0 **Base Address : 0x4002_6000**

QPRC ch.1 **Base Address : 0x4002_6040**

QPRC ch.2 **Base Address : 0x4002_6080**

QPRC ch.3 **Base Address : 0x4002_60C0**

Base_Address + Address	Register			
	+3	+2	+1	+0
0x0000	-	-	QPCR [H,W] 00000000 00000000	
0x0004	-	-	QRCR [H,W] 00000000 00000000	
0x0008	-	-	QPCCR [H,W] 00000000 00000000	
0x000C	-	-	QPRCR [H,W] 00000000 00000000	
0x0010	-	-	QMPR [H,W] 11111111 11111111	
0x0014	-	-	QICRH [B,H,W] --000000	QICRL [B,H,W] 00000000
0x0018	-	-	QCRH [B,H,W] 00000000	QCRL [B,H,W] 00000000
0x001C	-	-	QECR [B,H,W] -------- ----0000	
0x0020 - 0x003B	-	-	-	-
0x003C	QPCRR[B,H,W] 00000000 00000000		QRCRR[B,H,W] 00000000 00000000	

1.13 QPRC NF

QPRC ch.0 NF **Base Address : 0x4002_6100**

QPRC ch.1 NF **Base Address : 0x4002_6110**

QPRC ch.2 NF **Base Address : 0x4002_6120**

QPRC ch.3 NF **Base Address : 0x4002_6130**

Base_Address + Address	Register			
	+3	+2	+1	+0
0x0000	-	-	-	NFCTLA[B,H,W] --00-000
0x0004	-	-	-	NFCTLB[B,H,W] --00-000
0x0008	-	-	-	NFCTLZ[B,H,W] --00-000
0x000C	-	-	-	-

1.14 A/DC

12bit A/DC unit0 Base_Address : 0x4002_7000

12bit A/DC unit1 Base_Address : 0x4002_7100

12bit A/DC unit2 Base_Address : 0x4002_7200

Base_Address + Address	Register			
	+3	+2	+1	+0
0x000	-	-	ADCR[B,H,W] 000-0000	ADSR[B,H,W] 00---000
0x004	-	-	-	*
0x008	-	-	SCCR[B,H,W] 1000-000	SFNS[B,H,W] ----0000
0x00C	SCFD[B,H,W] XXXXXXXX XXXX---- ---1--XX ---XXXXX			
0x010	-	-	SCIS3[B,H,W] 00000000	SCIS2[B,H,W] 00000000
0x014	-	-	SCIS1[B,H,W] 00000000	SCIS0[B,H,W] 00000000
0x018	-	-	PCCR[B,H,W] 10000000	PFNS[B,H,W] --XX--00
0x01C	PCFD[B,H,W] XXXXXXXX XXXX---- ---1-XXX ---XXXXX			
0x020	-	-	-	PCIS[B,H,W] 00000000
0x024	CMPD[B,H,W] 00000000 00------		-	CMPCR[B,H,W] 00000000
0x028	-	-	ADSS3[B,H,W] 00000000	ADSS2[B,H,W] 00000000
0x02C	-	-	ADSS1[B,H,W] 00000000	ADSS0[B,H,W] 00000000
0x030	-	-	ADST0[B,H,W] 00010000	ADST1[B,H,W] 00010000
0x034	-	-	-	ADCT[B,H,W] 00000111
0x038	-	-	SCTSL[B,H,W] ----0000	PRTSL[B,H,W] ----0000
0x03C	-	-	ADCEN[B,H,W] 11111111 ------00	
0x040	CALSR[B,H,W] -------- -------- -------0 00000000			
0x044	-	-	-	WCMRCIF[B,H,W] 00000000
0x048	-	-	-	WCMRCOT [B,H,W] 00000000
0x04C	-	-	WCMPSR[B,H,W] 00000000	WCMPCR[B,H,W] 00100000
0x050	WCMPDH[B,H,W] 00000000 00000000		WCMPDL[B,H,W] 00000000 00000000	
0x040 - 0x0FC	-	-	-	-

1.15 CR Trim

CR Trim Base_Address : 0x4002_E000

Base_Address + Address	Register			
	+3	+2	+1	+0
0x000	-	-	-	MCR_PSR[B,H,W] -----001
0x004	-	-	MCR_FTRM[B,H,W] ------01 11101111	
0x008	-	-	-	MCR_TTRM[B,H,W] ---10000
0x00C	MCR_RLR[W] 00000000 00000000 00000000 00000001			
0x010 - 0x0FC	-	-	-	-

1.16 EXTI

1.16.1 TYPE1-M4, TYPE2-M4, TYPE3-M4, TYPE4-M4 Products

EXTI Base_Address : 0x4003_0000

Base_Address + Address	Register			
	+3	+2	+1	+0
0x000	ENIR[B,H,W] 00000000 00000000 00000000 00000000			
0x004	EIRR[B,H,W] XXXXXXXX XXXXXXXX XXXXXXXX XXXXXXXX			
0x008	EICL[B,H,W] 11111111 11111111 11111111 11111111			
0x00C	ELVR[B,H,W] 00000000 00000000 00000000 00000000			
0x010	ELVR1[B,H,W] 00000000 00000000 00000000 00000000			
0x014	-	-	-	NMIRR[B,H,W] -------0
0x018	-	-	-	NMICL[B,H,W] -------1
0x01C	-	-	-	-
0x020 - 0x0FC	-	-	-	-

1.16.2 TYPE5-M4, TYPE6-M4 Products

EXTI Base_Address : 0x4003_0000

Base_Address + Address	Register			
	+3	+2	+1	+0
0x000	ENIR[B,H,W] 00000000 00000000 00000000 00000000			
0x004	EIRR[B,H,W] XXXXXXXX XXXXXXXX XXXXXXXX XXXXXXXX			
0x008	EICL[B,H,W] 11111111 11111111 11111111 11111111			
0x00C	ELVR[B,H,W] 00000000 00000000 00000000 00000000			
0x010	ELVR1[B,H,W] 00000000 00000000 00000000 00000000			
0x014	-	-	-	NMIRR[B,H,W] -------0
0x018	-	-	-	NMICL[B,H,W] -------1
0x01C	ELVR2[B,H,W] 00000000 00000000 00000000 00000000			
0x020 - 0x0FC	-	-	-	-

1.17 INT-Req. READ

1.17.1 TYPE1-M4, TYPE2-M4, TYPE6-M4 Products

INT-Req. READ Base_Address : 0x4003_1000

Base_Address + Address	Register			
	+3	+2	+1	+0
0x000	DRQSEL[B,H,W] 00000000 00000000 00000000 00000000			
0x004 – 0x00C	-			
0x010	-	-	-	ODDPKS[B] ---00000
0x014	-	-	-	-
0x018	-	*	-	*
0x01C – 0x10C	-	-	-	-
0x110	IRQ003SEL[B,H,W] -------- 00000000 -------- 00000000			
0x114	IRQ004SEL[B,H,W] -------- 00000000 -------- 00000000			
0x118	IRQ005SEL[B,H,W] -------- 00000000 -------- 00000000			
0x11C	IRQ006SEL[B,H,W] -------- 00000000 -------- 00000000			
0x120	IRQ007SEL[B,H,W] -------- 00000000 -------- 00000000			
0x124	IRQ008SEL[B,H,W] -------- 00000000 -------- 00000000			
0x128	IRQ009SEL[B,H,W] -------- 00000000 -------- 00000000			
0x12C	IRQ010SEL[B,H,W] -------- 00000000 -------- 00000000			
0x130 – 0x1FC	-	-	-	-
0x200	EXC02MON[B,H,W] -------- -------- -------- ------00			
0x204	IRQ000MON[B,H,W] -------- -------- -------- -------0			
0x208	IRQ001MON[B,H,W] -------- -------- -------- -------0			
0x20C	IRQ002MON[B,H,W] -------- -------- -------- -------0			
0x210	IRQ003MON[B,H,W] -------- -------- -------- 00000000			
0x214	IRQ004MON[B,H,W] -------- -------- -------- 00000000			
0x218	IRQ005MON[B,H,W] -------- -------- -------- 00000000			

Base_Address + Address	Register			
	+3	+2	+1	+0
0x21C	IRQ006MON[B,H,W] -------- -------- -------- 00000000			
0x220	IRQ007MON[B,H,W] -------- -------- -------- 00000000			
0x224	IRQ008MON[B,H,W] -------- -------- -------- 00000000			
0x228	IRQ009MON[B,H,W] -------- -------- -------- 00000000			
0x22C	IRQ010MON[B,H,W] -------- -------- -------- 00000000			
0x230	IRQ011MON[B,H,W] -------- -------- -------- -------0			
0x234	IRQ012MON[B,H,W] -------- -------- -------- -------0			
0x238	IRQ013MON[B,H,W] -------- -------- -------- -------0			
0x23C	IRQ014MON[B,H,W] -------- -------- -------- -------0			
0x240	IRQ015MON[B,H,W] -------- -------- -------- -------0			
0x244	IRQ016MON[B,H,W] -------- -------- -------- -------0			
0x248	IRQ017MON[B,H,W] -------- -------- -------- -------0			
0x24C	IRQ018MON[B,H,W] -------- -------- -------- -------0			
0x250	IRQ019MON[B,H,W] -------- -------- -------- --000000			
0x254	IRQ020MON[B,H,W] -------- -------- -------- --000000			
0x258	IRQ021MON[B,H,W] -------- -------- -------- ----0000			
0x25C	IRQ022MON[B,H,W] -------- -------- -------- ----0000			
0x260	IRQ023MON[B,H,W] -------- -------- -------- ----0000			
0x264	IRQ024MON[B,H,W] -------- -------- -------- -----000			
0x268	IRQ025MON[B,H,W] -------- -------- -------- -----000			
0x26C	IRQ026MON[B,H,W] -------- -------- -------- ----0000			
0x270	IRQ027MON[B,H,W] -------- -------- -------- --000000			
0x274	IRQ028MON[B,H,W] -------- -------- -------- -----000			
0x278	IRQ029MON[B,H,W] -------- -------- -------- -----000			

Base_Address + Address	Register			
	+3	+2	+1	+0
0x27C	IRQ030MON[B,H,W] -------- -------- -------- ----0000			
0x280	IRQ031MON[B,H,W] -------- -------- -------- --000000			
0x284	IRQ032MON[B,H,W] -------- -------- -------- -----000			
0x288	IRQ033MON[B,H,W] -------- -------- -------- -----000			
0x28C	IRQ034MON[B,H,W] -------- -------- -------- ---00000			
0x290	IRQ035MON[B,H,W] -------- -------- -------- --000000			
0x294	IRQ036MON[B,H,W] -------- -------- -------- -----000			
0x298	IRQ037MON[B,H,W] -------- -------- -------- -----000			
0x29C	IRQ038MON[B,H,W] -------- -------- -------- -----000			
0x2A0	IRQ039MON[B,H,W] -------- -------- -------- ------00			
0x2A4	IRQ040MON[B,H,W] -------- -------- -------- ------00			
0x2A8	IRQ041MON[B,H,W] -------- -------- -------- ------00			
0x2AC	IRQ042MON[B,H,W] -------- -------- -------- ------00			
0x2B0	IRQ043MON[B,H,W] -------- -------- -------- ------00			
0x2B4	IRQ044MON[B,H,W] -------- -------- -------- ------00			
0x2B8	IRQ045MON[B,H,W] -------- -------- -------- ------00			
0x2BC	IRQ046MON[B,H,W] -------- -------- -------- ------00			
0x2C0	IRQ047MON[B,H,W] -------- -------- -------- ------00			
0x2C4	IRQ048MON[B,H,W] -------- -------- -------- -------0			
0x2C8	IRQ049MON[B,H,W] -------- -------- -------- -------0			
0x2CC	IRQ050MON[B,H,W] -------- -------- -------- -------0			
0x2D0	IRQ051MON[B,H,W] -------- -------- -------- -------0			
0x2D4	IRQ052MON[B,H,W] -------- -------- -------- -------0			
0x2D8	IRQ053MON[B,H,W] -------- -------- -------- -------0			

Base_Address + Address	Register			
	+3	+2	+1	+0
0x2DC	IRQ054MON[B,H,W] -------- -------- -------- -------0			
0x2E0	IRQ055MON[B,H,W] -------- -------- -------- -------0			
0x2E4	IRQ056MON[B,H,W] -------- -------- -------- -------0			
0x2E8	IRQ057MON[B,H,W] -------- -------- -------- -------0			
0x2EC	IRQ058MON[B,H,W] -------- -------- -------- -------0			
0x2F0	IRQ059MON[B,H,W] -------- -------- -------- ----0000			
0x2F4	IRQ060MON[B,H,W] -------- -------- -------- -------0			
0x2F8	IRQ061MON[B,H,W] -------- -------- -------- ------00			
0x2FC	IRQ062MON[B,H,W] -------- -------- -------- -------0			
0x300	IRQ063MON[B,H,W] -------- -------- -------- ------00			
0x304	IRQ064MON[B,H,W] -------- -------- -------- -------0			
0x308	IRQ065MON[B,H,W] -------- -------- -------- ------00			
0x30C	IRQ066MON[B,H,W] -------- -------- -------- -------0			
0x310	IRQ067MON[B,H,W] -------- -------- -------- ------00			
0x314	IRQ068MON[B,H,W] -------- -------- -------- -------0			
0x318	IRQ069MON[B,H,W] -------- -------- -------- ------00			
0x31C	IRQ070MON[B,H,W] -------- -------- -------- -------0			
0x320	IRQ071MON[B,H,W] -------- -------- -------- ------00			
0x324	IRQ072MON[B,H,W] -------- -------- -------- -------0			
0x328	IRQ073MON[B,H,W] -------- -------- -------- ------00			
0x32C	IRQ074MON[B,H,W] -------- -------- -------- -------0			
0x330	IRQ075MON[B,H,W] -------- -------- -------- ------00			
0x334	IRQ076MON[B,H,W] -------- -------- -------- ---00000			
0x338	IRQ077MON[B,H,W] -------- -------- -------- ---00000			

Base_Address + Address	Register			
	+3	+2	+1	+0
0x33C	IRQ078MON[B,H,W] -------- -------- -------- ---00000			
0x340	IRQ079MON[B,H,W] -------- -------- -------- --000000			
0x344	IRQ080MON[B,H,W] -------- -------- -------- -------0			
0x348	IRQ081MON[B,H,W] -------- -------- -------- -------0			
0x34C	IRQ082MON[B,H,W] -------- -------- -------- -----000			
0x350	IRQ083MON[B,H,W] -------- -------- -------- -------0			
0x354	IRQ084MON[B,H,W] -------- -------- -------- -------0			
0x358	IRQ085MON[B,H,W] -------- -------- -------- -------0			
0x35C	IRQ086MON[B,H,W] -------- -------- -------- -------0			
0x360	IRQ087MON[B,H,W] -------- -------- -------- -------0			
0x364	IRQ088MON[B,H,W] -------- -------- -------- -------0			
0x368	IRQ089MON[B,H,W] -------- -------- -------- -------0			
0x36C	IRQ090MON[B,H,W] -------- -------- -------- -------0			
0x370	IRQ091MON[B,H,W] -------- -------- -------- ------00			
0x374	IRQ092MON[B,H,W] -------- -------- -------- ----0000			
0x378	IRQ093MON[B,H,W] -------- -------- -------- ----0000			
0x37C	IRQ094MON[B,H,W] -------- -------- -------- ----0000			
0x380	IRQ095MON[B,H,W] -------- -------- -------- ----0000			
0x384	IRQ096MON[B,H,W] -------- -------- -------- --000000			
0x388	IRQ097MON[B,H,W] -------- -------- -------- --000000			
0x38C	IRQ098MON[B,H,W] -------- -------- -------- ------00			
0x390	IRQ099MON[B,H,W] -------- -------- -------- ------00			
0x394	IRQ100MON[B,H,W] -------- -------- -------- ------00			
0x398	IRQ101MON[B,H,W] -------- -------- -------- ------00			

Base_Address + Address	Register			
	+3	+2	+1	+0
0x39C	IRQ102MON[B,H,W] -------- -------- -------- ------00			
0x3A0	IRQ103MON[B,H,W] -------- -------- -------- -------0			
0x3A4	IRQ104MON[B,H,W] -------- -------- -------- ------00			
0x3A8	IRQ105MON[B,H,W] -------- -------- -------- -------0			
0x3AC	IRQ106MON[B,H,W] -------- -------- -------- ------00			
0x3B0	IRQ107MON[B,H,W] -------- -------- -------- -------0			
0x3B4	IRQ108MON[B,H,W] -------- -------- -------- ------00			
0x3B8	IRQ109MON[B,H,W] -------- -------- -------- -------0			
0x3BC	IRQ110MON[B,H,W] -------- -------- -------- ------00			
0x3C0	IRQ111MON[B,H,W] -------- -------- -------- ---00000			
0x3C4	-	-	-	-
0x3C8	IRQ113MON[B,H,W] -------- -------- -------- ---00000			
0x3CC	IRQ114MON[B,H,W] -------- -------- -------- --000000			
0x3D0 – 0x3D8	-	-	-	-
0x3DC	IRQ118MON[B,H,W] -------- -------- -------- ------00			
0x3E0	IRQ119MON[B,H,W] -------- -------- -------- -------0			
0x3E4	IRQ120MON[B,H,W] -------- -------- -------- -------0			
0x3E8	IRQ121MON[B,H,W] -------- -------- -------- ------00			
0x3EC	IRQ122MON[B,H,W] -------- -------- -------- -------0			
0x3F0	IRQ123MON[B,H,W] -------- -------- -------- ------00			
0x3F4	IRQ124MON[B,H,W] -------- -------- -------- -------0			
0x3F8	IRQ125MON[B,H,W] -------- -------- -------- ------00			
0x3FC	IRQ126MON[B,H,W] -------- -------- -------- -------0			
0x400	IRQ127MON[B,H,W] -------- -------- -------- ------00			
0x404 – 0xFFC	-	-	-	-

1.17.2 TYPE3-M4, TYPE5-M4 Product

INT-Req. READ Base_Address : 0x4003_1000

Base_Address + Address	Register			
	+3	+2	+1	+0
0x000	DRQSEL[B,H,W] 00000000 00000000 00000000 00000000			
0x004 – 0x00C	-			
0x010	-	-	-	ODDPKS[B] ---00000
0x014	-	-	-	ODDPKS1[B] --00000
0x018	-	*	-	*
0x01C – 0x10C	-	-	-	-
0x110	IRQ003SEL[B,H,W] -------- 00000000 -------- 00000000			
0x114	IRQ004SEL[B,H,W] -------- 00000000 -------- 00000000			
0x118	IRQ005SEL[B,H,W] -------- 00000000 -------- 00000000			
0x11C	IRQ006SEL[B,H,W] -------- 00000000 -------- 00000000			
0x120	IRQ007SEL[B,H,W] -------- 00000000 -------- 00000000			
0x124	IRQ008SEL[B,H,W] -------- 00000000 -------- 00000000			
0x128	IRQ009SEL[B,H,W] -------- 00000000 -------- 00000000			
0x12C	IRQ010SEL[B,H,W] -------- 00000000 -------- 00000000			
0x130 – 0x1FC	-	-	-	-
0x200	EXC02MON[B,H,W] -------- -------- -------- ------00			
0x204	IRQ000MON[B,H,W] -------- -------- -------- -------0			
0x208	IRQ001MON[B,H,W] -------- -------- -------- -------0			
0x20C	IRQ002MON[B,H,W] -------- -------- -------- -------0			
0x210	IRQ003MON[B,H,W] -------- -------- -------- 00000000			
0x214	IRQ004MON[B,H,W] -------- -------- -------- 00000000			
0x218	IRQ005MON[B,H,W] -------- -------- -------- 00000000			

Base_Address + Address	Register			
	+3	+2	+1	+0
0x21C	IRQ006MON[B,H,W] -------- -------- -------- 00000000			
0x220	IRQ007MON[B,H,W] -------- -------- -------- 00000000			
0x224	IRQ008MON[B,H,W] -------- -------- -------- 00000000			
0x228	IRQ009MON[B,H,W] -------- -------- -------- 00000000			
0x22C	IRQ010MON[B,H,W] -------- -------- -------- 00000000			
0x230	IRQ011MON[B,H,W] -------- -------- -------- -------0			
0x234	IRQ012MON[B,H,W] -------- -------- -------- -------0			
0x238	IRQ013MON[B,H,W] -------- -------- -------- -------0			
0x23C	IRQ014MON[B,H,W] -------- -------- -------- -------0			
0x240	IRQ015MON[B,H,W] -------- -------- -------- -------0			
0x244	IRQ016MON[B,H,W] -------- -------- -------- -------0			
0x248	IRQ017MON[B,H,W] -------- -------- -------- -------0			
0x24C	IRQ018MON[B,H,W] -------- -------- -------- -------0			
0x250	IRQ019MON[B,H,W] -------- -------- -------- --000000			
0x254	IRQ020MON[B,H,W] -------- -------- -------- --000000			
0x258	IRQ021MON[B,H,W] -------- -------- -------- ----0000			
0x25C	IRQ022MON[B,H,W] -------- -------- -------- ----0000			
0x260	IRQ023MON[B,H,W] -------- -------- -------- ----0000			
0x264	IRQ024MON[B,H,W] -------- -------- -------- -----000			
0x268	IRQ025MON[B,H,W] -------- -------- -------- -----000			
0x26C	IRQ026MON[B,H,W] -------- -------- -------- ----0000			

Base_Address + Address	Register			
	+3	+2	+1	+0
0x270	IRQ027MON[B,H,W] -------- -------- -------- --000000			
0x274	IRQ028MON[B,H,W] -------- -------- -------- -----000			
0x278	IRQ029MON[B,H,W] -------- -------- -------- -----000			
0x27C	IRQ030MON[B,H,W] -------- -------- -------- ----0000			
0x280	IRQ031MON[B,H,W] -------- -------- -------- --000000			
0x284	IRQ032MON[B,H,W] -------- -------- -------- -----000			
0x288	IRQ033MON[B,H,W] -------- -------- -------- -----000			
0x28C	IRQ034MON[B,H,W] -------- -------- -------- ---00000			
0x290	IRQ035MON[B,H,W] -------- -------- -------- --000000			
0x294	IRQ036MON[B,H,W] -------- -------- -------- -----000			
0x298	IRQ037MON[B,H,W] -------- -------- -------- -----000			
0x29C	IRQ038MON[B,H,W] -------- -------- -------- -----000			
0x2A0	IRQ039MON[B,H,W] -------- -------- -------- ------00			
0x2A4	IRQ040MON[B,H,W] -------- -------- -------- ------00			
0x2A8	IRQ041MON[B,H,W] -------- -------- -------- ------00			
0x2AC	IRQ042MON[B,H,W] -------- -------- -------- ------00			
0x2B0	IRQ043MON[B,H,W] -------- -------- -------- ------00			
0x2B4	IRQ044MON[B,H,W] -------- -------- -------- ------00			
0x2B8	IRQ045MON[B,H,W] -------- -------- -------- ------00			
0x2BC	IRQ046MON[B,H,W] -------- -------- -------- ------00			
0x2C0	IRQ047MON[B,H,W] -------- -------- -------- ------00			

Base_Address + Address	Register			
	+3	+2	+1	+0
0x2C4	IRQ048MON[B,H,W] -------- -------- -------- -------0			
0x2C8	IRQ049MON[B,H,W] -------- -------- -------- -------0			
0x2CC	IRQ050MON[B,H,W] -------- -------- -------- -------0			
0x2D0	IRQ051MON[B,H,W] -------- -------- -------- -------0			
0x2D4	IRQ052MON[B,H,W] -------- -------- -------- -------0			
0x2D8	IRQ053MON[B,H,W] -------- -------- -------- -------0			
0x2DC	IRQ054MON[B,H,W] -------- -------- -------- -------0			
0x2E0	IRQ055MON[B,H,W] -------- -------- -------- -------0			
0x2E4	IRQ056MON[B,H,W] -------- -------- -------- -------0			
0x2E8	IRQ057MON[B,H,W] -------- -------- -------- -------0			
0x2EC	IRQ058MON[B,H,W] -------- -------- -------- -------0			
0x2F0	IRQ059MON[B,H,W] -------- -------- -------- ---00000			
0x2F4	IRQ060MON[B,H,W] -------- -------- -------- -------0			
0x2F8	IRQ061MON[B,H,W] -------- -------- -------- ------00			
0x2FC	IRQ062MON[B,H,W] -------- -------- -------- -------0			
0x300	IRQ063MON[B,H,W] -------- -------- -------- ------00			
0x304	IRQ064MON[B,H,W] -------- -------- -------- -------0			
0x308	IRQ065MON[B,H,W] -------- -------- -------- ------00			
0x30C	IRQ066MON[B,H,W] -------- -------- -------- -------0			
0x310	IRQ067MON[B,H,W] -------- -------- -------- ------00			
0x314	IRQ068MON[B,H,W] -------- -------- -------- -------0			

Base_Address + Address	Register			
	+3	+2	+1	+0
0x318	IRQ069MON[B,H,W] -------- -------- -------- ------00			
0x31C	IRQ070MON[B,H,W] -------- -------- -------- -------0			
0x320	IRQ071MON[B,H,W] -------- -------- -------- ------00			
0x324	IRQ072MON[B,H,W] -------- -------- -------- -------0			
0x328	IRQ073MON[B,H,W] -------- -------- -------- ------00			
0x32C	IRQ074MON[B,H,W] -------- -------- -------- -------0			
0x330	IRQ075MON[B,H,W] -------- -------- -------- ------00			
0x334	IRQ076MON[B,H,W] -------- -------- -------- ---00000			
0x338	IRQ077MON[B,H,W] -------- -------- -------- ---00000			
0x33C	IRQ078MON[B,H,W] -------- -------- -------- ---00000			
0x340	IRQ079MON[B,H,W] -------- -------- -------- --000000			
0x344	IRQ080MON[B,H,W] -------- -------- -------- -------0			
0x348	IRQ081MON[B,H,W] -------- -------- -------- ---00000			
0x34C	IRQ082MON[B,H,W] -------- -------- -------- -----000			
0x350	IRQ083MON[B,H,W] -------- -------- -------- -------0			
0x354	IRQ084MON[B,H,W] -------- -------- -------- -------0			
0x358	IRQ085MON[B,H,W] -------- -------- -------- -------0			
0x35C	IRQ086MON[B,H,W] -------- -------- -------- -------0			
0x360	IRQ087MON[B,H,W] -------- -------- -------- -------0			
0x364	IRQ088MON[B,H,W] -------- -------- -------- -------0			
0x368	IRQ089MON[B,H,W] -------- -------- -------- -------0			

Base_Address + Address	Register			
	+3	+2	+1	+0
0x36C	IRQ090MON[B,H,W] -------- -------- -------- -------0			
0x370	IRQ091MON[B,H,W] -------- -------- -------- ------00			
0x374	IRQ092MON[B,H,W] -------- -------- -------- ----0000			
0x378	IRQ093MON[B,H,W] -------- -------- -------- ----0000			
0x37C	IRQ094MON[B,H,W] -------- -------- -------- ----0000			
0x380	IRQ095MON[B,H,W] -------- -------- -------- ----0000			
0x384	IRQ096MON[B,H,W] -------- -------- -------- --000000			
0x388	IRQ097MON[B,H,W] -------- -------- -------- --000000			
0x38C	IRQ098MON[B,H,W] -------- -------- -------- ------00			
0x390	IRQ099MON[B,H,W] -------- -------- -------- ------00			
0x394	IRQ100MON[B,H,W] -------- -------- -------- ------00			
0x398	IRQ101MON[B,H,W] -------- -------- -------- ------00			
0x39C	IRQ102MON[B,H,W] -------- -------- -------- ------00			
0x3A0	IRQ103MON[B,H,W] -------- -------- -------- -------0			
0x3A4	IRQ104MON[B,H,W] -------- -------- -------- ------00			
0x3A8	IRQ105MON[B,H,W] -------- -------- -------- -------0			
0x3AC	IRQ106MON[B,H,W] -------- -------- -------- ------00			
0x3B0	IRQ107MON[B,H,W] -------- -------- -------- -------0			
0x3B4	IRQ108MON[B,H,W] -------- -------- -------- ------00			
0x3B8	IRQ109MON[B,H,W] -------- -------- -------- -------0			
0x3BC	IRQ110MON[B,H,W] -------- -------- -------- ------00			

Base_Address + Address	Register			
	+3	+2	+1	+0
0x3C0	IRQ111MON[B,H,W] -------- -------- -------- ---00000			
0x3C4	IRQ112MON[B,H,W] -------- -------- -------- --000000			
0x3C8	IRQ113MON[B,H,W] -------- -------- -------- --000000			
0x3CC	IRQ114MON[B,H,W] -------- -------- -------- -0000000			
0x3D0	IRQ115MON[B,H,W] -------- -------- -------- -----000			
0x3D4	IRQ116MON[B,H,W] -------- -------- -------- --------			
0x3D8	IRQ117MON[B,H,W] -------- -------- -------- ------00			
0x3DC	IRQ118MON[B,H,W] -------- -------- -------- ------00			
0x3E0	IRQ119MON[B,H,W] -------- -------- -------- -------0			
0x3E4	IRQ120MON[B,H,W] -------- -------- -------- -------0			
0x3E8	IRQ121MON[B,H,W] -------- -------- -------- ------00			
0x3EC	IRQ122MON[B,H,W] -------- -------- -------- -------0			
0x3F0	IRQ123MON[B,H,W] -------- -------- -------- ------00			
0x3F4	IRQ124MON[B,H,W] -------- -------- -------- -------0			
0x3F8	IRQ125MON[B,H,W] -------- -------- -------- ------00			
0x3FC	IRQ126MON[B,H,W] -------- -------- -------- -------0			
0x400	IRQ127MON[B,H,W] -------- -------- -------- ------00			
0x404 – 0xFFC	-	-	-	-

1.17.3 TYPE4-M4 Product

INT-Req. READ Base_Address : 0x4003_1000

Base_Address + Address	Register			
	+3	+2	+1	+0
0x000	DRQSEL[B,H,W] 00000000 00000000 00000000 00000000			
0x004 – 0x00C	-			
0x010	-	-	-	ODDPKS[B] ---00000
0x014	-	-	-	ODDPKS1[B] --00000
0x018	-	*	-	*
0x01C – 0x10C	-	-	-	-
0x110	IRQ003SEL[B,H,W] 00000000 00000000 -------- 00000000			
0x114	IRQ004SEL[B,H,W] 00000000 00000000 -------- 00000000			
0x118	IRQ005SEL[B,H,W] 00000000 00000000 -------- 00000000			
0x11C	IRQ006SEL[B,H,W] 00000000 00000000 -------- 00000000			
0x120	IRQ007SEL[B,H,W] 00000000 00000000 -------- 00000000			
0x124	IRQ008SEL[B,H,W] 00000000 00000000 -------- 00000000			
0x128	IRQ009SEL[B,H,W] 00000000 00000000 -------- 00000000			
0x12C	IRQ010SEL[B,H,W] 00000000 00000000 -------- 00000000			
0x130 – 0x1FC	-	-	-	-
0x200	EXC02MON[B,H,W] -------- -------- -------- ------00			
0x204	IRQ000MON[B,H,W] -------- -------- -------- -------0			
0x208	IRQ001MON[B,H,W] -------- -------- -------- -------0			
0x20C	IRQ002MON[B,H,W] -------- -------- -------- -------0			
0x210	IRQ003MON[B,H,W] -------- -------- -------- 00000000			
0x214	IRQ004MON[B,H,W] -------- -------- -------- 00000000			
0x218	IRQ005MON[B,H,W] -------- -------- -------- 00000000			

Base_Address + Address	Register			
	+3	+2	+1	+0
0x21C	IRQ006MON[B,H,W] -------- -------- -------- 00000000			
0x220	IRQ007MON[B,H,W] -------- -------- -------- 00000000			
0x224	IRQ008MON[B,H,W] -------- -------- -------- 00000000			
0x228	IRQ009MON[B,H,W] -------- -------- -------- 00000000			
0x22C	IRQ010MON[B,H,W] -------- -------- -------- 00000000			
0x230	IRQ011MON[B,H,W] -------- -------- -------- -------0			
0x234	IRQ012MON[B,H,W] -------- -------- -------- -------0			
0x238	IRQ013MON[B,H,W] -------- -------- -------- -------0			
0x23C	IRQ014MON[B,H,W] -------- -------- -------- -------0			
0x240	IRQ015MON[B,H,W] -------- -------- -------- -------0			
0x244	IRQ016MON[B,H,W] -------- -------- -------- -------0			
0x248	IRQ017MON[B,H,W] -------- -------- -------- -------0			
0x24C	IRQ018MON[B,H,W] -------- -------- -------- -------0			
0x250	IRQ019MON[B,H,W] -------- -------- -------- --000000			
0x254	IRQ020MON[B,H,W] -------- -------- -------- --000000			
0x258	IRQ021MON[B,H,W] -------- -------- -------- ----0000			
0x25C	IRQ022MON[B,H,W] -------- -------- -------- ----0000			
0x260	IRQ023MON[B,H,W] -------- -------- -------- ----0000			
0x264	IRQ024MON[B,H,W] -------- -------- -------- -----000			
0x268	IRQ025MON[B,H,W] -------- -------- -------- -----000			
0x26C	IRQ026MON[B,H,W] -------- -------- -------- ----0000			

Base_Address + Address	Register			
	+3	+2	+1	+0
0x270	IRQ027MON[B,H,W] -------- -------- -------- --000000			
0x274	IRQ028MON[B,H,W] -------- -------- -------- -----000			
0x278	IRQ029MON[B,H,W] -------- -------- -------- -----000			
0x27C	IRQ030MON[B,H,W] -------- -------- -------- ----0000			
0x280	IRQ031MON[B,H,W] -------- -------- -------- --000000			
0x284	IRQ032MON[B,H,W] -------- -------- -------- -----000			
0x288	IRQ033MON[B,H,W] -------- -------- -------- -----000			
0x28C	IRQ034MON[B,H,W] -------- -------- -------- ---00000			
0x290	IRQ035MON[B,H,W] -------- -------- -------- --000000			
0x294	IRQ036MON[B,H,W] -------- -------- -------- -----000			
0x298	IRQ037MON[B,H,W] -------- -------- -------- -----000			
0x29C	IRQ038MON[B,H,W] -------- -------- -------- -----000			
0x2A0	IRQ039MON[B,H,W] -------- -------- -------- ------00			
0x2A4	IRQ040MON[B,H,W] -------- -------- -------- ------00			
0x2A8	IRQ041MON[B,H,W] -------- -------- -------- ------00			
0x2AC	IRQ042MON[B,H,W] -------- -------- -------- ------00			
0x2B0	IRQ043MON[B,H,W] -------- -------- -------- ------00			
0x2B4	IRQ044MON[B,H,W] -------- -------- -------- ------00			
0x2B8	IRQ045MON[B,H,W] -------- -------- -------- ------00			
0x2BC	IRQ046MON[B,H,W] -------- -------- -------- ------00			
0x2C0	IRQ047MON[B,H,W] -------- -------- -------- ------00			

Base_Address + Address	Register			
	+3	+2	+1	+0
0x2C4	IRQ048MON[B,H,W] -------- -------- -------- -------0			
0x2C8	IRQ049MON[B,H,W] -------- -------- -------- ------00			
0x2CC	IRQ050MON[B,H,W] -------- -------- -------- -------0			
0x2D0	IRQ051MON[B,H,W] -------- -------- -------- -------0			
0x2D4	IRQ052MON[B,H,W] -------- -------- -------- -------0			
0x2D8	IRQ053MON[B,H,W] -------- -------- -------- -------0			
0x2DC	IRQ054MON[B,H,W] -------- -------- -------- -------0			
0x2E0	IRQ055MON[B,H,W] -------- -------- -------- -------0			
0x2E4	IRQ056MON[B,H,W] -------- -------- -------- -------0			
0x2E8	IRQ057MON[B,H,W] -------- -------- -------- -------0			
0x2EC	IRQ058MON[B,H,W] -------- -------- -------- -------0			
0x2F0	IRQ059MON[B,H,W] -------- -------- -------- --000000			
0x2F4	IRQ060MON[B,H,W] -------- -------- -------- -------0			
0x2F8	IRQ061MON[B,H,W] -------- -------- -------- ------00			
0x2FC	IRQ062MON[B,H,W] -------- -------- -------- -------0			
0x300	IRQ063MON[B,H,W] -------- -------- -------- ------00			
0x304	IRQ064MON[B,H,W] -------- -------- -------- -------0			
0x308	IRQ065MON[B,H,W] -------- -------- -------- ------00			
0x30C	IRQ066MON[B,H,W] -------- -------- -------- -------0			
0x310	IRQ067MON[B,H,W] -------- -------- -------- ------00			
0x314	IRQ068MON[B,H,W] -------- -------- -------- -------0			

Base_Address + Address	Register			
	+3	+2	+1	+0
0x318	IRQ069MON[B,H,W] -------- -------- -------- ------00			
0x31C	IRQ070MON[B,H,W] -------- -------- -------- -------0			
0x320	IRQ071MON[B,H,W] -------- -------- -------- ------00			
0x324	IRQ072MON[B,H,W] -------- -------- -------- -------0			
0x328	IRQ073MON[B,H,W] -------- -------- -------- ------00			
0x32C	IRQ074MON[B,H,W] -------- -------- -------- -------0			
0x330	IRQ075MON[B,H,W] -------- -------- -------- ------00			
0x334	IRQ076MON[B,H,W] -------- -------- -------- ---00000			
0x338	IRQ077MON[B,H,W] -------- -------- -------- ---00000			
0x33C	IRQ078MON[B,H,W] -------- -------- -------- ---00000			
0x340	IRQ079MON[B,H,W] -------- -------- -------- --000000			
0x344	IRQ080MON[B,H,W] -------- -------- -------- -------0			
0x348	IRQ081MON[B,H,W] -------- -------- -------- ---00000			
0x34C	IRQ082MON[B,H,W] -------- -------- -------- -----000			
0x350	IRQ083MON[B,H,W] -------- -------- -------- -------0			
0x354	IRQ084MON[B,H,W] -------- -------- -------- -------0			
0x358	IRQ085MON[B,H,W] -------- -------- -------- -------0			
0x35C	IRQ086MON[B,H,W] -------- -------- -------- -------0			
0x360	IRQ087MON[B,H,W] -------- -------- -------- -------0			
0x364	IRQ088MON[B,H,W] -------- -------- -------- -------0			
0x368	IRQ089MON[B,H,W] -------- -------- -------- -------0			

Base_Address + Address	Register			
	+3	+2	+1	+0
0x36C	IRQ090MON[B,H,W] -------- -------- -------- -------0			
0x370	IRQ091MON[B,H,W] -------- -------- -------- ------00			
0x374	IRQ092MON[B,H,W] -------- -------- -------0 ----0000			
0x378	IRQ093MON[B,H,W] -------- -------- -------0 ----0000			
0x37C	IRQ094MON[B,H,W] -------- -------- -------0 ----0000			
0x380	IRQ095MON[B,H,W] -------- -------- -------0 ----0000			
0x384	IRQ096MON[B,H,W] -------- -------- -------0 --000000			
0x388	IRQ097MON[B,H,W] -------- -------- -------0 --000000			
0x38C	IRQ098MON[B,H,W] -------- -------- -------0 ------00			
0x390	IRQ099MON[B,H,W] -------- -------- -------0 ------00			
0x394	IRQ100MON[B,H,W] -------- -------- -------0 ------00			
0x398	IRQ101MON[B,H,W] -------- -------- -------0 ------00			
0x39C	IRQ102MON[B,H,W] -------- -------- -------0 ------00			
0x3A0	IRQ103MON[B,H,W] -------- -------- -------0 -------0			
0x3A4	IRQ104MON[B,H,W] -------- -------- -------0 ------00			
0x3A8	IRQ105MON[B,H,W] -------- -------- -------0 -------0			
0x3AC	IRQ106MON[B,H,W] -------- -------- -------0 ------00			
0x3B0	IRQ107MON[B,H,W] -------- -------- -------0 -------0			
0x3B4	IRQ108MON[B,H,W] -------- -------- -------0 ------00			
0x3B8	IRQ109MON[B,H,W] -------- -------- -------0 -------0			
0x3BC	IRQ110MON[B,H,W] -------- -------- -------0 ------00			

Base_Address + Address	Register			
	+3	+2	+1	+0
0x3C0	IRQ111MON[B,H,W] -------- -------- -------- ---00000			
0x3C4	IRQ112MON[B,H,W] -------- -------- ------00 00000000			
0x3C8	IRQ113MON[B,H,W] -------- -------- -------- --000000			
0x3CC	IRQ114MON[B,H,W] -------- -------- -------- -0000000			
0x3D0	IRQ115MON[B,H,W] -------- -------- -------- -----000			
0x3D4	IRQ116MON[B,H,W] -------- -------- -------- --------			
0x3D8	IRQ117MON[B,H,W] -------- -------- -------- -----000			
0x3DC	IRQ118MON[B,H,W] -------- -------- -------- ------00			
0x3E0	IRQ119MON[B,H,W] -------- -------- -------- -------0			
0x3E4	IRQ120MON[B,H,W] -------- -------- -------0 -------0			
0x3E8	IRQ121MON[B,H,W] -------- -------- -------0 ------00			
0x3EC	IRQ122MON[B,H,W] -------- -------- -------0 -------0			
0x3F0	IRQ123MON[B,H,W] -------- -------- -------0 ------00			
0x3F4	IRQ124MON[B,H,W] -------- -------- -------- -------0			
0x3F8	IRQ125MON[B,H,W] -------- -------- -------- ------00			
0x3FC	IRQ126MON[B,H,W] -------- -------- -------- -------0			
0x400	IRQ127MON[B,H,W] -------- -------- -------- ------00			
0x404 – 0xFFC	-	-	-	-

1.18 D/AC

12bit D/AC unit0 Base_Address : 0x4003_3000

12bit D/AC unit1 Base_Address : 0x4003_3008

Base_Address + Address	Register			
	+3	+2	+1	+0
0x000	-	-	-	DACR[B,H,W] --00--00
0x004	-	-	DADR[H,W] ----XXXX XXXXXXXX	
0x010 – 0xFFC	-	-	-	-

1.19 HDMI-CEC

HDMI-CEC/Remote Control Receiver ch.0 Base_Address : 0x4003_4000

HDMI-CEC/Remote Control Receiver ch.1 Base_Address : 0x4003_4100

Base_Address + Address	Register			
	+3	+2	+1	+0
0x000	-	-	-	TXCTRL[B,H,W] --0000-0
0x004	-	-	-	TXDATA[B,H,W] 00000000
0x008	-	-	-	TXSTS[B,H,W] --00---0
0x00C	-	-	-	SFREE[B,H,W] ----0000
0x010 – 0x03C	-	-	-	-
0x040	-	-	RCCR[B,H,W] 0---0000	RCST[B,H,W] 00000000
0x044	-	-	RCSHW[B,H,W] 00000000	RCDAHW[B,H,W] 00000000
0x048	-	-	RCDBHW[B,H,W] 00000000	-
0x04C	-	-	RCADR1[B,H,W] ---00000	RCADR2[B,H,W] ---00000
0x050	-	-	RCDTHH[B,H,W] 00000000	RCDTHL[B,H,W] 00000000
0x054	-	-	RCDTLH[B,H,W] 00000000	RCDTLL[B,H,W] 00000000
0x058	-	-	RCCKD[B,H,W] ---00000 00000000	
0x05C	-	-	RCRC[B,H,W] ---0---0	RCRHW[B,H,W] 00000000
0x060	-	-	RCLE[B,H,W] 00000-00	-
0x064	-	-	RCLELW[B,H,W] 00000000	RCLESW[B,H,W] 00000000
0x068 – 0x0FC	-	-	-	-

1.20 GPIO

1.20.1 TYPE1-M4, TYPE2-M4, TYPE6-M4 Products

GPIO Base_Address : 0x4006_F000

Base_Address + Address	Register			
	+3	+2	+1	+0
0x000	PFR0[B,H,W] ---- ---- ---- ---- 0000 0000 0001 1111			
0x004	PFR1[B,H,W] ---- ---- ---- ---- 0000 0000 0000 0000			
0x008	PFR2[B,H,W] ---- ---- ---- ---- 0000 0000 0000 0000			
0x00C	PFR3[B,H,W] ---- ---- ---- ---- 0000 0000 0000 0000			
0x010	PFR4[B,H,W] ---- ---- ---- ---- 0000 0000 0000 0000			
0x014	PFR5[B,H,W] ---- ---- ---- ---- 0000 0000 0000 0000			
0x018	PFR6[B,H,W] ---- ---- ---- ---- 0000 0000 0000 0000			
0x01C	PFR7[B,H,W] ---- ---- ---- ---- 0000 0000 0000 0000			
0x020	PFR8[B,H,W] ---- ---- ---- ---- 0000 0000 0000 0000			
0x024	PFR9[B,H,W] ---- ---- ---- ---- 0000 0000 0000 0000			
0x028	PFRA[B,H,W] ---- ---- ---- ---- 0000 0000 0000 0000			
0x02C	PFRB[B,H,W] ---- ---- ---- ---- 0000 0000 0000 0000			
0x030	PFRC[B,H,W] ---- ---- ---- ---- 0000 0000 0000 0000			
0x034	PFRD[B,H,W] ---- ---- ---- ---- 0000 0000 0000 0000			
0x038	PFRE[B,H,W] ---- ---- ---- ---- 0000 0000 0000 0000			
0x03C	PFRF[B,H,W] ---- ---- ---- ---- 0000 0000 0000 0000			
0x040 - 0x0FC	-	-	-	-

Base_Address + Address	Register			
	+3	+2	+1	+0
0x100	PCR0[B,H,W] ---- ---- ---- ---- 0000 0000 0001 1111			
0x104	PCR1[B,H,W] ---- ---- ---- ---- 0000 0000 0000 0000			
0x108	PCR2[B,H,W] ---- ---- ---- ---- 0000 0000 0000 0000			
0x10C	PCR3[B,H,W] ---- ---- ---- ---- 0000 0000 0000 0000			
0x110	PCR4[B,H,W] ---- ---- ---- ---- 0000 0000 0000 0000			
0x114	PCR5[B,H,W] ---- ---- ---- ---- 0000 0000 0000 0000			
0x118	PCR6[B,H,W] ---- ---- ---- ---- 0000 0000 0000 0000			
0x11C	PCR7[B,H,W] ---- ---- ---- ---- 0000 0000 0000 0000			
0x120	-			
0x124	PCR9[B,H,W] ---- ---- ---- ---- 0000 0000 0000 0000			
0x128	PCRA[B,H,W] ---- ---- ---- ---- 0000 0000 0000 0000			
0x12C	PCRB[B,H,W] ---- ---- ---- ---- 0000 0000 0000 0000			
0x130	PCRC[B,H,W] ---- ---- ---- ---- 0000 0000 0000 0000			
0x134	PCRD[B,H,W] ---- ---- ---- ---- 0000 0000 0000 0000			
0x138	PCRE[B,H,W] ---- ---- ---- ---- 0000 0000 0000 0000			
0x13C	PCRF[B,H,W] ---- ---- ---- ---- 0000 0000 0000 0000			
0x140 - 0x1FC	-	-	-	-

Base_Address + Address	Register			
	+3	+2	+1	+0
0x200	DDR0[B,H,W] ---- ---- ---- ---- 0000 0000 0000 0000			
0x204	DDR1[B,H,W] ---- ---- ---- ---- 0000 0000 0000 0000			
0x208	DDR2[B,H,W] ---- ---- ---- ---- 0000 0000 0000 0000			
0x20C	DDR3[B,H,W] ---- ---- ---- ---- 0000 0000 0000 0000			
0x210	DDR4[B,H,W] ---- ---- ---- ---- 0000 0000 0000 0000			
0x214	DDR5[B,H,W] ---- ---- ---- ---- 0000 0000 0000 0000			
0x218	DDR6[B,H,W] ---- ---- ---- ---- 0000 0000 0000 0000			
0x21C	DDR7[B,H,W] ---- ---- ---- ---- 0000 0000 0000 0000			
0x220	DDR8[B,H,W] ---- ---- ---- ---- 0000 0000 0000 0000			
0x224	DDR9[B,H,W] ---- ---- ---- ---- 0000 0000 0000 0000			
0x228	DDRA[B,H,W] ---- ---- ---- ---- 0000 0000 0000 0000			
0x22C	DDRB[B,H,W] ---- ---- ---- ---- 0000 0000 0000 0000			
0x230	DDRC[B,H,W] ---- ---- ---- ---- 0000 0000 0000 0000			
0x234	DDRD[B,H,W] ---- ---- ---- ---- 0000 0000 0000 0000			
0x238	DDRE[B,H,W] ---- ---- ---- ---- 0000 0000 0000 0000			
0x23C	DDRF[B,H,W] ---- ---- ---- ---- 0000 0000 0000 0000			
0x240 - 0x2FC	-	-	-	-

Base_Address + Address	Register			
	+3	+2	+1	+0
0x300	PDIR0[B,H,W] ---- ---- ---- ---- 0000 0000 0000 0000			
0x304	PDIR1[B,H,W] ---- ---- ---- ---- 0000 0000 0000 0000			
0x308	PDIR2[B,H,W] ---- ---- ---- ---- 0000 0000 0000 0000			
0x30C	PDIR3[B,H,W] ---- ---- ---- ---- 0000 0000 0000 0000			
0x310	PDIR4[B,H,W] ---- ---- ---- ---- 0000 0000 0000 0000			
0x314	PDIR5[B,H,W] ---- ---- ---- ---- 0000 0000 0000 0000			
0x318	PDIR6[B,H,W] ---- ---- ---- ---- 0000 0000 0000 0000			
0x31C	PDIR7[B,H,W] ---- ---- ---- ---- 0000 0000 0000 0000			
0x320	PDIR8[B,H,W] ---- ---- ---- ---- 0000 0000 0000 0000			
0x324	PDIR9[B,H,W] ---- ---- ---- ---- 0000 0000 0000 0000			
0x328	PDIRA[B,H,W] ---- ---- ---- ---- 0000 0000 0000 0000			
0x32C	PDIRB[B,H,W] ---- ---- ---- ---- 0000 0000 0000 0000			
0x330	PDIRC[B,H,W] ---- ---- ---- ---- 0000 0000 0000 0000			
0x334	PDIRD[B,H,W] ---- ---- ---- ---- 0000 0000 0000 0000			
0x338	PDIRE[B,H,W] ---- ---- ---- ---- 0000 0000 0000 0000			
0x33C	PDIRF[B,H,W] ---- ---- ---- ---- 0000 0000 0000 0000			
0x340 - 0x3FC	-	-	-	-

Base_Address + Address	Register			
	+3	+2	+1	+0
0x400	PDOR0[B,H,W] ---- ---- ---- ---- 0000 0000 0000 0000			
0x404	PDOR1[B,H,W] ---- ---- ---- ---- 0000 0000 0000 0000			
0x408	PDOR2[B,H,W] ---- ---- ---- ---- 0000 0000 0000 0000			
0x40C	PDOR3[B,H,W] ---- ---- ---- ---- 0000 0000 0000 0000			
0x410	PDOR4[B,H,W] ---- ---- ---- ---- 0000 0000 0000 0000			
0x414	PDOR5[B,H,W] ---- ---- ---- ---- 0000 0000 0000 0000			
0x418	PDOR6[B,H,W] ---- ---- ---- ---- 0000 0000 0000 0000			
0x41C	PDOR7[B,H,W] ---- ---- ---- ---- 0000 0000 0000 0000			
0x420	PDOR8[B,H,W] ---- ---- ---- ---- 0000 0000 0000 0000			
0x424	PDOR9[B,H,W] ---- ---- ---- ---- 0000 0000 0000 0000			
0x428	PDORA[B,H,W] ---- ---- ---- ---- 0000 0000 0000 0000			
0x42C	PDORB[B,H,W] ---- ---- ---- ---- 0000 0000 0000 0000			
0x430	PDORC[B,H,W] ---- ---- ---- ---- 0000 0000 0000 0000			
0x434	PDORD[B,H,W] ---- ---- ---- ---- 0000 0000 0000 0000			
0x438	PDORE[B,H,W] ---- ---- ---- ---- 0000 0000 0000 0000			
0x43C	PDORF[B,H,W] ---- ---- ---- ---- 0000 0000 0000 0000			
0x440 - 0x4FC	-	-	-	-
0x500	ADE[B,H,W] 1111 1111 1111 1111 1111 1111 1111 1111			
0x504 - 0x57C	-	-	-	-
0x580	SPSR[B,H,W] ---- ---- ---- ---- ---- ---- --00 01--			
0x584 - 0x5FC	-	-	-	-

Base_Address + Address	Register			
	+3	+2	+1	+0
0x600	EPFR00[B,H,W] ---- --00 ---- --11 --0- --0- 0000 --00			
0x604	EPFR01[B,H,W] 0000 0000 0000 0000 ---0 0000 0000 0000			
0x608	EPFR02[B,H,W] 0000 0000 0000 0000 ---0 0000 0000 0000			
0x60C	EPFR03[B,H,W] 0000 0000 0000 0000 ---0 0000 0000 0000			
0x610	EPFR04[B,H,W] --00 0000 --00 00-- --00 0000 -000 00--			
0x614	EPFR05[B,H,W] --00 0000 --00 00-- --00 0000 --00 00--			
0x618	EPFR06[B,H,W] 0000 0000 0000 0000 0000 0000 0000 0000			
0x61C	EPFR07[B,H,W] 0000 0000 0000 0000 0000 0000 0000 ----			
0x620	EPFR08[B,H,W] 0000 0000 0000 0000 0000 0000 0000 0000			
0x624	EPFR09[B,H,W] 0000 0000 0000 0000 0000 0000 0000 0000			
0x628	EPFR10[B,H,W] 0000 0000 0000 0000 0000 0000 0000 0000			
0x62C	EPFR11[B,H,W] ---- --00 0000 0000 0000 0000 0000 0000			
0x630	EPFR12[B,H,W] --00 0000 --00 00-- --00 0000 --00 00--			
0x634	EPFR13[B,H,W] --00 0000 --00 00-- --00 0000 --00 00--			
0x638	EPFR14[B,H,W] --00 0000 0000 00-- ---- ---- --00 0000			
0x63C	EPFR15[B,H,W] 0000 0000 0000 0000 0000 0000 0000 0000			
0x640	EPFR16[B,H,W] --00 0000 0000 0000 0000 0000 0000 0000			
0x644	EPFR17[B,H,W] ---- 0000 0000 0000 0000 0000 0000 ----			
0x648	EPFR18[B,H,W] --00 0000 0000 0000 00-- --00 0000 ----			
0x64C	EPFR19[B,H,W] ---- ---- ---- ---- ---- ---- ---- ----			
0x650	EPFR20[B,H,W] ---- ---0 0000 0000 0000 0000 0000 0000			
0x654 – 0x6FC	-	-	-	-

Base_Address + Address	Register			
	+3	+2	+1	+0
0x700	PZR0[B,H,W] ---- ---- ---- ---- 0000 0000 0000 0000			
0x704	PZR1[B,H,W] ---- ---- ---- ---- 0000 0000 0000 0000			
0x708	PZR2[B,H,W] ---- ---- ---- ---- 0000 0000 0000 0000			
0x70C	PZR3[B,H,W] ---- ---- ---- ---- 0000 0000 0000 0000			
0x710	PZR4[B,H,W] ---- ---- ---- ---- 0000 0000 0000 0000			
0x714	PZR5[B,H,W] ---- ---- ---- ---- 0000 0000 0000 0000			
0x718	PZR6[B,H,W] ---- ---- ---- ---- 0000 0000 0000 0000			
0x71C	PZR7[B,H,W] ---- ---- ---- ---- 0000 0000 0000 0000			
0x720	PZR8[B,H,W] ---- ---- ---- ---- 0000 0000 0000 0000			
0x724	PZR9[B,H,W] ---- ---- ---- ---- 0000 0000 0000 0000			
0x728	PZRA[B,H,W] ---- ---- ---- ---- 0000 0000 0000 0000			
0x72C	PZRB[B,H,W] ---- ---- ---- ---- 0000 0000 0000 0000			
0x730	PZRC[B,H,W] ---- ---- ---- ---- 0000 0000 0000 0000			
0x734	PZRD[B,H,W] ---- ---- ---- ---- 0000 0000 0000 0000			
0x738	PZRE[B,H,W] ---- ---- ---- ---- 0000 0000 0000 0000			
0x73C	PZRF[B,H,W] ---- ---- ---- ---- 0000 0000 0000 0000			
0x740 - 0xEFC	-	-	-	-
0xF00 – 0xF04	*			
0xF08 – 0xFDC	-	-	-	-
0xFE0	*			
0xFE4 - 0xFFC	-	-	-	-

1.20.2 TYPE3-M4 Product

GPIO Base_Address : 0x4006_F000

Base_Address + Address	Register			
	+3	+2	+1	+0
0x000	PFR0[B,H,W] ---- ---- ---- ---- 0000 0000 0001 1111			
0x004	PFR1[B,H,W] ---- ---- ---- ---- 0000 0000 0000 0000			
0x008	PFR2[B,H,W] ---- ---- ---- ---- 0000 0000 0000 0000			
0x00C	PFR3[B,H,W] ---- ---- ---- ---- 0000 0000 0000 0000			
0x010	PFR4[B,H,W] ---- ---- ---- ---- 0000 0000 0000 0000			
0x014	PFR5[B,H,W] ---- ---- ---- ---- 0000 0000 0000 0000			
0x018	PFR6[B,H,W] ---- ---- ---- ---- 0000 0000 0000 0000			
0x01C	PFR7[B,H,W] ---- ---- ---- ---- 0000 0000 0000 0000			
0x020	PFR8[B,H,W] ---- ---- ---- ---- 0000 0000 0000 0000			
0x024	PFR9[B,H,W] ---- ---- ---- ---- 0000 0000 0000 0000			
0x028	PFRA[B,H,W] ---- ---- ---- ---- 0000 0000 0000 0000			
0x02C	PFRB[B,H,W] ---- ---- ---- ---- 0000 0000 0000 0000			
0x030	PFRC[B,H,W] ---- ---- ---- ---- 0000 0000 0000 0000			
0x034	PFRD[B,H,W] ---- ---- ---- ---- 0000 0000 0000 0000			
0x038	PFRE[B,H,W] ---- ---- ---- ---- 0000 0000 0000 0000			
0x03C	PFRF[B,H,W] ---- ---- ---- ---- 0000 0000 0000 0000			
0x040 - 0x0FC	-	-	-	-

Base_Address + Address	Register			
	+3	+2	+1	+0
0x100	PCR0[B,H,W] ---- ---- ---- ---- 0000 0000 0001 1111			
0x104	PCR1[B,H,W] ---- ---- ---- ---- 0000 0000 0000 0000			
0x108	PCR2[B,H,W] ---- ---- ---- ---- 0000 0000 0000 0000			
0x10C	PCR3[B,H,W] ---- ---- ---- ---- 0000 0000 0000 0000			
0x110	PCR4[B,H,W] ---- ---- ---- ---- 0000 0000 0000 0000			
0x114	PCR5[B,H,W] ---- ---- ---- ---- 0000 0000 0000 0000			
0x118	PCR6[B,H,W] ---- ---- ---- ---- 0000 0000 0000 0000			
0x11C	PCR7[B,H,W] ---- ---- ---- ---- 0000 0000 0000 0000			
0x120	-			
0x124	PCR9[B,H,W] ---- ---- ---- ---- 0000 0000 0000 0000			
0x128	PCRA[B,H,W] ---- ---- ---- ---- 0000 0000 0000 0000			
0x12C	PCRB[B,H,W] ---- ---- ---- ---- 0000 0000 0000 0000			
0x130	PCRC[B,H,W] ---- ---- ---- ---- 0000 0000 0000 0000			
0x134	PCRD[B,H,W] ---- ---- ---- ---- 0000 0000 0000 0000			
0x138	PCRE[B,H,W] ---- ---- ---- ---- 0000 0000 0000 0000			
0x13C	PCRF[B,H,W] ---- ---- ---- ---- 0000 0000 0000 0000			
0x140 - 0x1FC	-	-	-	-

Base_Address + Address	Register			
	+3	+2	+1	+0
0x200	DDR0[B,H,W] ---- ---- ---- ---- 0000 0000 0000 0000			
0x204	DDR1[B,H,W] ---- ---- ---- ---- 0000 0000 0000 0000			
0x208	DDR2[B,H,W] ---- ---- ---- ---- 0000 0000 0000 0000			
0x20C	DDR3[B,H,W] ---- ---- ---- ---- 0000 0000 0000 0000			
0x210	DDR4[B,H,W] ---- ---- ---- ---- 0000 0000 0000 0000			
0x214	DDR5[B,H,W] ---- ---- ---- ---- 0000 0000 0000 0000			
0x218	DDR6[B,H,W] ---- ---- ---- ---- 0000 0000 0000 0000			
0x21C	DDR7[B,H,W] ---- ---- ---- ---- 0000 0000 0000 0000			
0x220	DDR8[B,H,W] ---- ---- ---- ---- 0000 0000 0000 0000			
0x224	DDR9[B,H,W] ---- ---- ---- ---- 0000 0000 0000 0000			
0x228	DDRA[B,H,W] ---- ---- ---- ---- 0000 0000 0000 0000			
0x22C	DDRB[B,H,W] ---- ---- ---- ---- 0000 0000 0000 0000			
0x230	DDRC[B,H,W] ---- ---- ---- ---- 0000 0000 0000 0000			
0x234	DDRD[B,H,W] ---- ---- ---- ---- 0000 0000 0000 0000			
0x238	DDRE[B,H,W] ---- ---- ---- ---- 0000 0000 0000 0000			
0x23C	DDRF[B,H,W] ---- ---- ---- ---- 0000 0000 0000 0000			
0x240 - 0x2FC	-	-	-	-

Base_Address + Address	Register			
	+3	+2	+1	+0
0x300	PDIR0[B,H,W] ---- ---- ---- ---- 0000 0000 0000 0000			
0x304	PDIR1[B,H,W] ---- ---- ---- ---- 0000 0000 0000 0000			
0x308	PDIR2[B,H,W] ---- ---- ---- ---- 0000 0000 0000 0000			
0x30C	PDIR3[B,H,W] ---- ---- ---- ---- 0000 0000 0000 0000			
0x310	PDIR4[B,H,W] ---- ---- ---- ---- 0000 0000 0000 0000			
0x314	PDIR5[B,H,W] ---- ---- ---- ---- 0000 0000 0000 0000			
0x318	PDIR6[B,H,W] ---- ---- ---- ---- 0000 0000 0000 0000			
0x31C	PDIR7[B,H,W] ---- ---- ---- ---- 0000 0000 0000 0000			
0x320	PDIR8[B,H,W] ---- ---- ---- ---- 0000 0000 0000 0000			
0x324	PDIR9[B,H,W] ---- ---- ---- ---- 0000 0000 0000 0000			
0x328	PDIRA[B,H,W] ---- ---- ---- ---- 0000 0000 0000 0000			
0x32C	PDIRB[B,H,W] ---- ---- ---- ---- 0000 0000 0000 0000			
0x330	PDIRC[B,H,W] ---- ---- ---- ---- 0000 0000 0000 0000			
0x334	PDIRD[B,H,W] ---- ---- ---- ---- 0000 0000 0000 0000			
0x338	PDIRE[B,H,W] ---- ---- ---- ---- 0000 0000 0000 0000			
0x33C	PDIRF[B,H,W] ---- ---- ---- ---- 0000 0000 0000 0000			
0x340 - 0x3FC	-	-	-	-

Base_Address + Address	Register			
	+3	+2	+1	+0
0x400	PDOR0[B,H,W] ---- ---- ---- ---- 0000 0000 0000 0000			
0x404	PDOR1[B,H,W] ---- ---- ---- ---- 0000 0000 0000 0000			
0x408	PDOR2[B,H,W] ---- ---- ---- ---- 0000 0000 0000 0000			
0x40C	PDOR3[B,H,W] ---- ---- ---- ---- 0000 0000 0000 0000			
0x410	PDOR4[B,H,W] ---- ---- ---- ---- 0000 0000 0000 0000			
0x414	PDOR5[B,H,W] ---- ---- ---- ---- 0000 0000 0000 0000			
0x418	PDOR6[B,H,W] ---- ---- ---- ---- 0000 0000 0000 0000			
0x41C	PDOR7[B,H,W] ---- ---- ---- ---- 0000 0000 0000 0000			
0x420	PDOR8[B,H,W] ---- ---- ---- ---- 0000 0000 0000 0000			
0x424	PDOR9[B,H,W] ---- ---- ---- ---- 0000 0000 0000 0000			
0x428	PDORA[B,H,W] ---- ---- ---- ---- 0000 0000 0000 0000			
0x42C	PDORB[B,H,W] ---- ---- ---- ---- 0000 0000 0000 0000			
0x430	PDORC[B,H,W] ---- ---- ---- ---- 0000 0000 0000 0000			
0x434	PDORD[B,H,W] ---- ---- ---- ---- 0000 0000 0000 0000			
0x438	PDORE[B,H,W] ---- ---- ---- ---- 0000 0000 0000 0000			
0x43C	PDORF[B,H,W] ---- ---- ---- ---- 0000 0000 0000 0000			
0x440 - 0x4FC	-	-	-	-
0x500	ADE[B,H,W] 1111 1111 1111 1111 1111 1111 1111 1111			
0x504 - 0x57C	-	-	-	-
0x580	SPSR[B,H,W] ---- ---- ---- ---- ---- ---- --00 01--			
0x584 - 0x5FC	-	-	-	-

Base_Address + Address	Register			
	+3	+2	+1	+0
0x600	EPFR00[B,H,W] ---- 0000 ---- --11 --0- --0- 0000 –00			
0x604	EPFR01[B,H,W] 0000 0000 0000 0000 ---0 0000 0000 0000			
0x608	EPFR02[B,H,W] 0000 0000 0000 0000 ---0 0000 0000 0000			
0x60C	EPFR03[B,H,W] 0000 0000 0000 0000 ---0 0000 0000 0000			
0x610	EPFR04[B,H,W] --00 0000 --00 00-- --00 0000 -000 00--			
0x614	EPFR05[B,H,W] --00 0000 --00 00-- --00 0000 --00 00--			
0x618	EPFR06[B,H,W] 0000 0000 0000 0000 0000 0000 0000 0000			
0x61C	EPFR07[B,H,W] 0000 0000 0000 0000 0000 0000 0000 ----			
0x620	EPFR08[B,H,W] 0000 0000 0000 0000 0000 0000 0000 0000			
0x624	EPFR09[B,H,W] 0000 0000 0000 0000 0000 0000 0000 0000			
0x628	EPFR10[B,H,W] 0000 0000 0000 0000 0000 0000 0000 0000			
0x62C	EPFR11[B,H,W] ---- --00 0000 0000 0000 0000 0000 0000			
0x630	EPFR12[B,H,W] --00 0000 --00 00-- --00 0000 --00 00--			
0x634	EPFR13[B,H,W] --00 0000 --00 00-- --00 0000 --00 00--			
0x638	EPFR14[B,H,W] --00 0000 0000 00-- ---- ---- --00 0000			
0x63C	EPFR15[B,H,W] 0000 0000 0000 0000 0000 0000 0000 0000			
0x640	EPFR16[B,H,W] --00 0000 0000 0000 0000 0000 0000 0000			
0x644	EPFR17[B,H,W] ---- 0000 0000 0000 0000 0000 0000 ----			
0x648	EPFR18[B,H,W] --00 0000 0000 0000 00-- --00 0000 0000			
0x64C	EPFR19[B,H,W] ---- ---- ---- ---- ---- ---- ---- ----			
0x650	EPFR20[B,H,W] ---- ---0 0000 0000 0000 0000 0000 0000			

Base_Address + Address	Register			
	+3	+2	+1	+0
0x654	EPFR21[B,H,W] ---- ---- ---- ---- ---- ---- ---- ----			
0x658	EPFR22[B,H,W] ---- ---- ---- ---- ---- ---- ---- ----			
0x65C	EPFR23[B,H,W] ---- ---- ---- ---- 0000 0000 0000 0000			
0x660	EPFR24[B,H,W] ---- ---- ---- ---- ---- 0000 0000 0000			
0x664	EPFR25[B,H,W] ---- ---- ---- ---- ---- ---- ---- 0000			
0x668	EPFR26[B,H,W] ---- ---- ---- --00 0000 0000 0000 0000			
0x66C – 0x6FC	-	-	-	-

Base_Address + Address	Register			
	+3	+2	+1	+0
0x700	PZR0[B,H,W] ---- ---- ---- ---- 0000 0000 0000 0000			
0x704	PZR1[B,H,W] ---- ---- ---- ---- 0000 0000 0000 0000			
0x708	PZR2[B,H,W] ---- ---- ---- ---- 0000 0000 0000 0000			
0x70C	PZR3[B,H,W] ---- ---- ---- ---- 0000 0000 0000 0000			
0x710	PZR4[B,H,W] ---- ---- ---- ---- 0000 0000 0000 0000			
0x714	PZR5[B,H,W] ---- ---- ---- ---- 0000 0000 0000 0000			
0x718	PZR6[B,H,W] ---- ---- ---- ---- 0000 0000 0000 0000			
0x71C	PZR7[B,H,W] ---- ---- ---- ---- 0000 0000 0000 0000			
0x720	PZR8[B,H,W] ---- ---- ---- ---- 0000 0000 0000 0000			
0x724	PZR9[B,H,W] ---- ---- ---- ---- 0000 0000 0000 0000			
0x728	PZRA[B,H,W] ---- ---- ---- ---- 0000 0000 0000 0000			
0x72C	PZRB[B,H,W] ---- ---- ---- ---- 0000 0000 0000 0000			
0x730	PZRC[B,H,W] ---- ---- ---- ---- 0000 0000 0000 0000			
0x734	PZRD[B,H,W] ---- ---- ---- ---- 0000 0000 0000 0000			
0x738	PZRE[B,H,W] ---- ---- ---- ---- 0000 0000 0000 0000			
0x73C	PZRF[B,H,W] ---- ---- ---- ---- 0000 0000 0000 0000			
0x740	PDSR0[B,H,W] ---- ---- ---- ---- 0000 0000 0000 0000			
0x744	PDSR1[B,H,W] ---- ---- ---- ---- 0000 0000 0000 0000			
0x748	PDSR2[B,H,W] ---- ---- ---- ---- 0000 0000 0000 0000			
0x74C	PDSR3[B,H,W] ---- ---- ---- ---- 0000 0000 0000 0000			
0x750	PDSR4[B,H,W] ---- ---- ---- ---- 0000 0000 0000 0000			
0x754	PDSR5[B,H,W] ---- ---- ---- ---- 0000 0000 0000 0000			

Base_Address + Address	Register			
	+3	+2	+1	+0
0x758	PDSR6[B,H,W] ---- ---- ---- ---- 0000 0000 0000 0000			
0x75C	PDSR7[B,H,W] ---- ---- ---- ---- 0000 0000 0000 0000			
0x760	PDSR8[B,H,W] ---- ---- ---- ---- 0000 0000 0000 0000			
0x764	PDSR9[B,H,W] ---- ---- ---- ---- 0000 0000 0000 0000			
0x768	PDSRA[B,H,W] ---- ---- ---- ---- 0000 0000 0000 0000			
0x76C	PDSRB[B,H,W] ---- ---- ---- ---- 0000 0000 0000 0000			
0x770	PDSRC[B,H,W] ---- ---- ---- ---- 0000 0000 0000 0000			
0x774	PDSRD[B,H,W] ---- ---- ---- ---- 0000 0000 0000 0000			
0x778	PDSRE[B,H,W] ---- ---- ---- ---- 0000 0000 0000 0000			
0x77C	PDSRF[B,H,W] ---- ---- ---- ---- 0000 0000 0000 0000			
0x780 - 0xEFC	-	-	-	-
0xF00 – 0xF04	*			
0xF08 – 0xFDC	-	-	-	-
0xFE0	*			
0xFE4 - 0xFFC	-	-	-	-

1.20.3 TYPE4-M4 Product

GPIO Base_Address : 0x4006_F000

Base_Address + Address	Register			
	+3	+2	+1	+0
0x000	PFR0[B,H,W] ---- ---- ---- ---- 0000 0000 0001 1111			
0x004	PFR1[B,H,W] ---- ---- ---- ---- 0000 0000 0000 0000			
0x008	PFR2[B,H,W] ---- ---- ---- ---- 0000 0000 0000 0000			
0x00C	PFR3[B,H,W] ---- ---- ---- ---- 0000 0000 0000 0000			
0x010	PFR4[B,H,W] ---- ---- ---- ---- 0000 0000 0000 0000			
0x014	PFR5[B,H,W] ---- ---- ---- ---- 0000 0000 0000 0000			
0x018	PFR6[B,H,W] ---- ---- ---- ---- 0000 0000 0000 0000			
0x01C	PFR7[B,H,W] ---- ---- ---- ---- 0000 0000 0000 0000			
0x020	PFR8[B,H,W] ---- ---- ---- ---- 0000 0000 0000 0000			
0x024	PFR9[B,H,W] ---- ---- ---- ---- 0000 0000 0000 0000			
0x028	PFRA[B,H,W] ---- ---- ---- ---- 0000 0000 0000 0000			
0x02C	PFRB[B,H,W] ---- ---- ---- ---- 0000 0000 0000 0000			
0x030	PFRC[B,H,W] ---- ---- ---- ---- 0000 0000 0000 0000			
0x034	PFRD[B,H,W] ---- ---- ---- ---- 0000 0000 0000 0000			
0x038	PFRE[B,H,W] ---- ---- ---- ---- 0000 0000 0000 0000			
0x03C	PFRF[B,H,W] ---- ---- ---- ---- 0000 0000 0000 0000			
0x040 - 0x0FC	-	-	-	-

Base_Address + Address	Register			
	+3	+2	+1	+0
0x100	PCR0[B,H,W] ---- ---- ---- ---- 0000 0000 0001 1111			
0x104	PCR1[B,H,W] ---- ---- ---- ---- 0000 0000 0000 0000			
0x108	PCR2[B,H,W] ---- ---- ---- ---- 0000 0000 0000 0000			
0x10C	PCR3[B,H,W] ---- ---- ---- ---- 0000 0000 0000 0000			
0x110	PCR4[B,H,W] ---- ---- ---- ---- 0000 0000 0000 0000			
0x114	PCR5[B,H,W] ---- ---- ---- ---- 0000 0000 0000 0000			
0x118	PCR6[B,H,W] ---- ---- ---- ---- 0000 0000 0000 0000			
0x11C	PCR7[B,H,W] ---- ---- ---- ---- 0000 0000 0000 0000			
0x120	-			
0x124	PCR9[B,H,W] ---- ---- ---- ---- 0000 0000 0000 0000			
0x128	PCRA[B,H,W] ---- ---- ---- ---- 0000 0000 0000 0000			
0x12C	PCRB[B,H,W] ---- ---- ---- ---- 0000 0000 0000 0000			
0x130	PCRC[B,H,W] ---- ---- ---- ---- 0000 0000 0000 0000			
0x134	PCRD[B,H,W] ---- ---- ---- ---- 0000 0000 0000 0000			
0x138	PCRE[B,H,W] ---- ---- ---- ---- 0000 0000 0000 0000			
0x13C	PCRF[B,H,W] ---- ---- ---- ---- 0000 0000 0000 0000			
0x140 - 0x1FC	-	-	-	-

Base_Address + Address	Register			
	+3	+2	+1	+0
0x200	DDR0[B,H,W] ---- ---- ---- ---- 0000 0000 0000 0000			
0x204	DDR1[B,H,W] ---- ---- ---- ---- 0000 0000 0000 0000			
0x208	DDR2[B,H,W] ---- ---- ---- ---- 0000 0000 0000 0000			
0x20C	DDR3[B,H,W] ---- ---- ---- ---- 0000 0000 0000 0000			
0x210	DDR4[B,H,W] ---- ---- ---- ---- 0000 0000 0000 0000			
0x214	DDR5[B,H,W] ---- ---- ---- ---- 0000 0000 0000 0000			
0x218	DDR6[B,H,W] ---- ---- ---- ---- 0000 0000 0000 0000			
0x21C	DDR7[B,H,W] ---- ---- ---- ---- 0000 0000 0000 0000			
0x220	DDR8[B,H,W] ---- ---- ---- ---- 0000 0000 0000 0000			
0x224	DDR9[B,H,W] ---- ---- ---- ---- 0000 0000 0000 0000			
0x228	DDRA[B,H,W] ---- ---- ---- ---- 0000 0000 0000 0000			
0x22C	DDRB[B,H,W] ---- ---- ---- ---- 0000 0000 0000 0000			
0x230	DDRC[B,H,W] ---- ---- ---- ---- 0000 0000 0000 0000			
0x234	DDRD[B,H,W] ---- ---- ---- ---- 0000 0000 0000 0000			
0x238	DDRE[B,H,W] ---- ---- ---- ---- 0000 0000 0000 0000			
0x23C	DDRF[B,H,W] ---- ---- ---- ---- 0000 0000 0000 0000			
0x240 - 0x2FC	-	-	-	-

Base_Address + Address	Register			
	+3	+2	+1	+0
0x300	PDIR0[B,H,W] ---- ---- ---- ---- 0000 0000 0000 0000			
0x304	PDIR1[B,H,W] ---- ---- ---- ---- 0000 0000 0000 0000			
0x308	PDIR2[B,H,W] ---- ---- ---- ---- 0000 0000 0000 0000			
0x30C	PDIR3[B,H,W] ---- ---- ---- ---- 0000 0000 0000 0000			
0x310	PDIR4[B,H,W] ---- ---- ---- ---- 0000 0000 0000 0000			
0x314	PDIR5[B,H,W] ---- ---- ---- ---- 0000 0000 0000 0000			
0x318	PDIR6[B,H,W] ---- ---- ---- ---- 0000 0000 0000 0000			
0x31C	PDIR7[B,H,W] ---- ---- ---- ---- 0000 0000 0000 0000			
0x320	PDIR8[B,H,W] ---- ---- ---- ---- 0000 0000 0000 0000			
0x324	PDIR9[B,H,W] ---- ---- ---- ---- 0000 0000 0000 0000			
0x328	PDIRA[B,H,W] ---- ---- ---- ---- 0000 0000 0000 0000			
0x32C	PDIRB[B,H,W] ---- ---- ---- ---- 0000 0000 0000 0000			
0x330	PDIRC[B,H,W] ---- ---- ---- ---- 0000 0000 0000 0000			
0x334	PDIRD[B,H,W] ---- ---- ---- ---- 0000 0000 0000 0000			
0x338	PDIRE[B,H,W] ---- ---- ---- ---- 0000 0000 0000 0000			
0x33C	PDIRF[B,H,W] ---- ---- ---- ---- 0000 0000 0000 0000			
0x340 - 0x3FC	-	-	-	-

Base_Address + Address	Register			
	+3	+2	+1	+0
0x400	PDOR0[B,H,W] ---- ---- ---- ---- 0000 0000 0000 0000			
0x404	PDOR1[B,H,W] ---- ---- ---- ---- 0000 0000 0000 0000			
0x408	PDOR2[B,H,W] ---- ---- ---- ---- 0000 0000 0000 0000			
0x40C	PDOR3[B,H,W] ---- ---- ---- ---- 0000 0000 0000 0000			
0x410	PDOR4[B,H,W] ---- ---- ---- ---- 0000 0000 0000 0000			
0x414	PDOR5[B,H,W] ---- ---- ---- ---- 0000 0000 0000 0000			
0x418	PDOR6[B,H,W] ---- ---- ---- ---- 0000 0000 0000 0000			
0x41C	PDOR7[B,H,W] ---- ---- ---- ---- 0000 0000 0000 0000			
0x420	PDOR8[B,H,W] ---- ---- ---- ---- 0000 0000 0000 0000			
0x424	PDOR9[B,H,W] ---- ---- ---- ---- 0000 0000 0000 0000			
0x428	PDORA[B,H,W] ---- ---- ---- ---- 0000 0000 0000 0000			
0x42C	PDORB[B,H,W] ---- ---- ---- ---- 0000 0000 0000 0000			
0x430	PDORC[B,H,W] ---- ---- ---- ---- 0000 0000 0000 0000			
0x434	PDORD[B,H,W] ---- ---- ---- ---- 0000 0000 0000 0000			
0x438	PDORE[B,H,W] ---- ---- ---- ---- 0000 0000 0000 0000			
0x43C	PDORF[B,H,W] ---- ---- ---- ---- 0000 0000 0000 0000			
0x440 - 0x4FC	-	-	-	-
0x500	ADE[B,H,W] 1111 1111 1111 1111 1111 1111 1111 1111			
0x504 - 0x57C	-	-	-	-
0x580	SPSR[B,H,W] ---- ---- ---- ---- ---- ---- --00 01--			
0x584 - 0x5FC	-	-	-	-

Base_Address + Address	Register			
	+3	+2	+1	+0
0x600	EPFR00[B,H,W] ---- 0000 ---- --11 --0- --0- 0000 –00			
0x604	EPFR01[B,H,W] 0000 0000 0000 0000 ---0 0000 0000 0000			
0x608	EPFR02[B,H,W] 0000 0000 0000 0000 ---0 0000 0000 0000			
0x60C	EPFR03[B,H,W] 0000 0000 0000 0000 ---0 0000 0000 0000			
0x610	EPFR04[B,H,W] --00 0000 --00 00-- --00 0000 -000 00--			
0x614	EPFR05[B,H,W] --00 0000 --00 00-- --00 0000 --00 00--			
0x618	EPFR06[B,H,W] 0000 0000 0000 0000 0000 0000 0000 0000			
0x61C	EPFR07[B,H,W] 0000 0000 0000 0000 0000 0000 0000 ----			
0x620	EPFR08[B,H,W] 0000 0000 0000 0000 0000 0000 0000 0000			
0x624	EPFR09[B,H,W] 0000 0000 0000 0000 0000 0000 0000 0000			
0x628	EPFR10[B,H,W] 0000 0000 0000 0000 0000 0000 0000 0000			
0x62C	EPFR11[B,H,W] ---- --00 0000 0000 0000 0000 0000 0000			
0x630	EPFR12[B,H,W] --00 0000 --00 00-- --00 0000 --00 00--			
0x634	EPFR13[B,H,W] --00 0000 --00 00-- --00 0000 --00 00--			
0x638	EPFR14[B,H,W] --00 0000 0000 00-- ---- ---- --00 0000			
0x63C	EPFR15[B,H,W] 0000 0000 0000 0000 0000 0000 0000 0000			
0x640	EPFR16[B,H,W] --00 0000 0000 0000 0000 0000 0000 0000			
0x644	EPFR17[B,H,W] ---- 0000 0000 0000 0000 0000 0000 ----			
0x648	EPFR18[B,H,W] --00 0000 0000 0000 00-- --00 0000 0000			
0x64C	EPFR19[B,H,W] ---- ---- ---- ---- ---- ---- ---- ----			
0x650	EPFR20[B,H,W] ---- ---0 0000 0000 0000 0000 0000 0000			

Base_Address + Address	Register			
	+3	+2	+1	+0
0x654	EPFR21[B,H,W] ---- ---- ---- ---- ---- ---- ---- ----			
0x658	EPFR22[B,H,W] ---- ---- ---- ---- ---- ---- ---- ----			
0x65C	EPFR23[B,H,W] ---- ---- ---- ---- 0000 0000 0000 0000			
0x660	EPFR24[B,H,W] ---- 0000 0000 0000 ---- 0000 0000 0000			
0x664	EPFR25[B,H,W] ---- ---- ---- ---- ---- ---- ---- 0000			
0x668	EPFR26[B,H,W] ---- ---- ---- --00 0000 0000 0000 0000			
0x66C	EPFR27[B,H,W] 0000 0000 0000 0000 0000 0000 0000 0000			
0x670	EPFR28[B,H,W] 0000 0000 0000 0000 0000 0000 0000 0000			
0x674	EPFR29[B,H,W] 0000 0000 0000 00-- 0000 0000 0000 0000			
0x67C	EPFR30[B,H,W] ---- --00 0000 0000 ---- 0000 0000 0000			
0x680 – 0x6FC	-	-	-	-
0x700	PZR0[B,H,W] ---- ---- ---- ---- 0000 0000 0000 0000			
0x704	PZR1[B,H,W] ---- ---- ---- ---- 0000 0000 0000 0000			
0x708	PZR2[B,H,W] ---- ---- ---- ---- 0000 0000 0000 0000			
0x70C	PZR3[B,H,W] ---- ---- ---- ---- 0000 0000 0000 0000			
0x710	PZR4[B,H,W] ---- ---- ---- ---- 0000 0000 0000 0000			
0x714	PZR5[B,H,W] ---- ---- ---- ---- 0000 0000 0000 0000			
0x718	PZR6[B,H,W] ---- ---- ---- ---- 0000 0000 0000 0000			
0x71C	PZR7[B,H,W] ---- ---- ---- ---- 0000 0000 0000 0000			
0x720	PZR8[B,H,W] ---- ---- ---- ---- 0000 0000 0000 0000			
0x724	PZR9[B,H,W] ---- ---- ---- ---- 0000 0000 0000 0000			
0x728	PZRA[B,H,W] ---- ---- ---- ---- 0000 0000 0000 0000			

Base_Address + Address	Register			
	+3	+2	+1	+0
0x72C	PZRB[B,H,W] ---- ---- ---- ---- 0000 0000 0000 0000			
0x730	PZRC[B,H,W] ---- ---- ---- ---- 0000 0000 0000 0000			
0x734	PZRD[B,H,W] ---- ---- ---- ---- 0000 0000 0000 0000			
0x738	PZRE[B,H,W] ---- ---- ---- ---- 0000 0000 0000 0000			
0x73C	PZRF[B,H,W] ---- ---- ---- ---- 0000 0000 0000 0000			
0x740 - 0xEFC	-	-	-	-
0xF00 – 0xF04	*			
0xF08 – 0xFDC	-	-	-	-
0xFE0	*			
0xFE4 - 0xFFC	-	-	-	-

1.20.4 TYPE5-M4 Product

GPIO Base_Address : 0x4006_F000

Base_Address + Address	Register			
	+3	+2	+1	+0
0x000	PFR0[B,H,W] ---- ---- ---- ---- 0000 0000 0001 1111			
0x004	PFR1[B,H,W] ---- ---- ---- ---- 0000 0000 0000 0000			
0x008	PFR2[B,H,W] ---- ---- ---- ---- 0000 0000 0000 0000			
0x00C	PFR3[B,H,W] ---- ---- ---- ---- 0000 0000 0000 0000			
0x010	PFR4[B,H,W] ---- ---- ---- ---- 0000 0000 0000 0000			
0x014	PFR5[B,H,W] ---- ---- ---- ---- 0000 0000 0000 0000			
0x018	PFR6[B,H,W] ---- ---- ---- ---- 0000 0000 0000 0000			
0x01C	PFR7[B,H,W] ---- ---- ---- ---- 0000 0000 0000 0000			
0x020	PFR8[B,H,W] ---- ---- ---- ---- 0000 0000 0000 0000			
0x024	PFR9[B,H,W] ---- ---- ---- ---- 0000 0000 0000 0000			
0x028	PFRA[B,H,W] ---- ---- ---- ---- 0000 0000 0000 0000			
0x02C	PFRB[B,H,W] ---- ---- ---- ---- 0000 0000 0000 0000			
0x030	PFRC[B,H,W] ---- ---- ---- ---- 0000 0000 0000 0000			
0x034	PFRD[B,H,W] ---- ---- ---- ---- 0000 0000 0000 0000			
0x038	PFRE[B,H,W] ---- ---- ---- ---- 0000 0000 0000 0000			
0x03C	PFRF[B,H,W] ---- ---- ---- ---- 0000 0000 0000 0000			
0x040 - 0x0FC	-	-	-	-

Base_Address + Address	Register			
	+3	+2	+1	+0
0x100	PCR0[B,H,W] ---- ---- ---- ---- 0000 0000 0001 1111			
0x104	PCR1[B,H,W] ---- ---- ---- ---- 0000 0000 0000 0000			
0x108	PCR2[B,H,W] ---- ---- ---- ---- 0000 0000 0000 0000			
0x10C	PCR3[B,H,W] ---- ---- ---- ---- 0000 0000 0000 0000			
0x110	PCR4[B,H,W] ---- ---- ---- ---- 0000 0000 0000 0000			
0x114	PCR5[B,H,W] ---- ---- ---- ---- 0000 0000 0000 0000			
0x118	PCR6[B,H,W] ---- ---- ---- ---- 0000 0000 0000 0000			
0x11C	PCR7[B,H,W] ---- ---- ---- ---- 0000 0000 0000 0000			
0x120	-			
0x124	PCR9[B,H,W] ---- ---- ---- ---- 0000 0000 0000 0000			
0x128	PCRA[B,H,W] ---- ---- ---- ---- 0000 0000 0000 0000			
0x12C	PCRB[B,H,W] ---- ---- ---- ---- 0000 0000 0000 0000			
0x130	PCRC[B,H,W] ---- ---- ---- ---- 0000 0000 0000 0000			
0x134	PCRD[B,H,W] ---- ---- ---- ---- 0000 0000 0000 0000			
0x138	PCRE[B,H,W] ---- ---- ---- ---- 0000 0000 0000 0000			
0x13C	PCRF[B,H,W] ---- ---- ---- ---- 0000 0000 0000 0000			
0x140 - 0x1FC	-	-	-	-

Base_Address + Address	Register			
	+3	+2	+1	+0
0x200	DDR0[B,H,W] ---- ---- ---- ---- 0000 0000 0000 0000			
0x204	DDR1[B,H,W] ---- ---- ---- ---- 0000 0000 0000 0000			
0x208	DDR2[B,H,W] ---- ---- ---- ---- 0000 0000 0000 0000			
0x20C	DDR3[B,H,W] ---- ---- ---- ---- 0000 0000 0000 0000			
0x210	DDR4[B,H,W] ---- ---- ---- ---- 0000 0000 0000 0000			
0x214	DDR5[B,H,W] ---- ---- ---- ---- 0000 0000 0000 0000			
0x218	DDR6[B,H,W] ---- ---- ---- ---- 0000 0000 0000 0000			
0x21C	DDR7[B,H,W] ---- ---- ---- ---- 0000 0000 0000 0000			
0x220	DDR8[B,H,W] ---- ---- ---- ---- 0000 0000 0000 0000			
0x224	DDR9[B,H,W] ---- ---- ---- ---- 0000 0000 0000 0000			
0x228	DDRA[B,H,W] ---- ---- ---- ---- 0000 0000 0000 0000			
0x22C	DDRB[B,H,W] ---- ---- ---- ---- 0000 0000 0000 0000			
0x230	DDRC[B,H,W] ---- ---- ---- ---- 0000 0000 0000 0000			
0x234	DDRD[B,H,W] ---- ---- ---- ---- 0000 0000 0000 0000			
0x238	DDRE[B,H,W] ---- ---- ---- ---- 0000 0000 0000 0000			
0x23C	DDRF[B,H,W] ---- ---- ---- ---- 0000 0000 0000 0000			
0x240 - 0x2FC	-	-	-	-

Base_Address + Address	Register			
	+3	+2	+1	+0
0x300	PDIR0[B,H,W] ---- ---- ---- ---- 0000 0000 0000 0000			
0x304	PDIR1[B,H,W] ---- ---- ---- ---- 0000 0000 0000 0000			
0x308	PDIR2[B,H,W] ---- ---- ---- ---- 0000 0000 0000 0000			
0x30C	PDIR3[B,H,W] ---- ---- ---- ---- 0000 0000 0000 0000			
0x310	PDIR4[B,H,W] ---- ---- ---- ---- 0000 0000 0000 0000			
0x314	PDIR5[B,H,W] ---- ---- ---- ---- 0000 0000 0000 0000			
0x318	PDIR6[B,H,W] ---- ---- ---- ---- 0000 0000 0000 0000			
0x31C	PDIR7[B,H,W] ---- ---- ---- ---- 0000 0000 0000 0000			
0x320	PDIR8[B,H,W] ---- ---- ---- ---- 0000 0000 0000 0000			
0x324	PDIR9[B,H,W] ---- ---- ---- ---- 0000 0000 0000 0000			
0x328	PDIRA[B,H,W] ---- ---- ---- ---- 0000 0000 0000 0000			
0x32C	PDIRB[B,H,W] ---- ---- ---- ---- 0000 0000 0000 0000			
0x330	PDIRC[B,H,W] ---- ---- ---- ---- 0000 0000 0000 0000			
0x334	PDIRD[B,H,W] ---- ---- ---- ---- 0000 0000 0000 0000			
0x338	PDIRE[B,H,W] ---- ---- ---- ---- 0000 0000 0000 0000			
0x33C	PDIRF[B,H,W] ---- ---- ---- ---- 0000 0000 0000 0000			
0x340 - 0x3FC	-	-	-	-

Base_Address + Address	Register			
	+3	+2	+1	+0
0x400	PDOR0[B,H,W] ---- ---- ---- ---- 0000 0000 0000 0000			
0x404	PDOR1[B,H,W] ---- ---- ---- ---- 0000 0000 0000 0000			
0x408	PDOR2[B,H,W] ---- ---- ---- ---- 0000 0000 0000 0000			
0x40C	PDOR3[B,H,W] ---- ---- ---- ---- 0000 0000 0000 0000			
0x410	PDOR4[B,H,W] ---- ---- ---- ---- 0000 0000 0000 0000			
0x414	PDOR5[B,H,W] ---- ---- ---- ---- 0000 0000 0000 0000			
0x418	PDOR6[B,H,W] ---- ---- ---- ---- 0000 0000 0000 0000			
0x41C	PDOR7[B,H,W] ---- ---- ---- ---- 0000 0000 0000 0000			
0x420	PDOR8[B,H,W] ---- ---- ---- ---- 0000 0000 0000 0000			
0x424	PDOR9[B,H,W] ---- ---- ---- ---- 0000 0000 0000 0000			
0x428	PDORA[B,H,W] ---- ---- ---- ---- 0000 0000 0000 0000			
0x42C	PDORB[B,H,W] ---- ---- ---- ---- 0000 0000 0000 0000			
0x430	PDORC[B,H,W] ---- ---- ---- ---- 0000 0000 0000 0000			
0x434	PDORD[B,H,W] ---- ---- ---- ---- 0000 0000 0000 0000			
0x438	PDORE[B,H,W] ---- ---- ---- ---- 0000 0000 0000 0000			
0x43C	PDORF[B,H,W] ---- ---- ---- ---- 0000 0000 0000 0000			
0x440 - 0x4FC	-	-	-	-
0x500	ADE[B,H,W] 1111 1111 1111 1111 1111 1111 1111 1111			
0x504 - 0x57C	-	-	-	-
0x580	SPSR[B,H,W] ---- ---- ---- ---- ---- ---- --00 01--			
0x584 - 0x5FC	-	-	-	-

Base_Address + Address	Register			
	+3	+2	+1	+0
0x600	EPFR00[B,H,W] ---- 0000 ---- --11 --0- --0- 0000 –00			
0x604	EPFR01[B,H,W] 0000 0000 0000 0000 ---0 0000 0000 0000			
0x608	EPFR02[B,H,W] 0000 0000 0000 0000 ---0 0000 0000 0000			
0x60C	EPFR03[B,H,W] ---- ---- ---- ---- ---- ---- ---- ----			
0x610	EPFR04[B,H,W] --00 0000 --00 00-- --00 0000 -000 00--			
0x614	EPFR05[B,H,W] --00 0000 --00 00-- --00 0000 --00 00--			
0x618	EPFR06[B,H,W] 0000 0000 0000 0000 0000 0000 0000 0000			
0x61C	EPFR07[B,H,W] 0000 0000 0000 0000 0000 0000 0000 ----			
0x620	EPFR08[B,H,W] 0000 0000 0000 0000 0000 0000 0000 0000			
0x624	EPFR09[B,H,W] 0000 0000 0000 0000 0000 0000 0000 0000			
0x628	EPFR10[B,H,W] 0000 0000 0000 0000 0000 0000 0000 0000			
0x62C	EPFR11[B,H,W] ---- --00 0000 0000 0000 0000 0000 0000			
0x630	EPFR12[B,H,W] --00 0000 --00 00-- --00 0000 --00 00--			
0x634	EPFR13[B,H,W] --00 0000 --00 00-- --00 0000 --00 00--			
0x638	EPFR14[B,H,W] --00 0000 0000 00-- ---- ---- --00 0000			
0x63C	EPFR15[B,H,W] 0000 0000 0000 0000 0000 0000 0000 0000			
0x640	EPFR16[B,H,W] --00 0000 0000 0000 0000 0000 0000 0000			
0x644	EPFR17[B,H,W] ---- ---- ---- ---- ---- ---- ---- ----			
0x648	EPFR18[B,H,W] --00 0000 0000 0000 00-- --00 0000 0000			
0x64C	EPFR19[B,H,W] ---- ---- ---- ---- ---- ---- ---- ----			
0x650	EPFR20[B,H,W] ---- ---0 0000 0000 0000 0000 0000 0000			

Base_Address + Address	Register			
	+3	+2	+1	+0
0x654	EPFR21[B,H,W] ---- ---- ---- ---- ---- ---- ---- ----			
0x658	EPFR22[B,H,W] ---- ---- ---- ---- ---- ---- ---- ----			
0x65C	EPFR23[B,H,W] ---- ---- ---- ---- 0000 0000 0000 0000			
0x660	EPFR24[B,H,W] ---- ---- ---- ---- ---- 0000 0000 0000			
0x664	EPFR25[B,H,W] ---- ---- ---- ---- ---- ---- ---- 0000			
0x668	EPFR26[B,H,W] ---- ---- ---- --00 0000 0000 0000 0000			
0x66C – 0x680	-	-	-	-
0x684	EPFR33[B,H,W] ---- 0000 0000 0000 ---- 0000 0000 0000			
0x688	-	-	-	-
0x68C	EPFR35[B,H,W] ---- 0000 0000 0000 ---- ---- ---- ----			
0x690 – 0x6FC	-	-	-	-

Base_Address + Address	Register			
	+3	+2	+1	+0
0x700	PZR0[B,H,W] ---- ---- ---- ---- 0000 0000 0000 0000			
0x704	PZR1[B,H,W] ---- ---- ---- ---- 0000 0000 0000 0000			
0x708	PZR2[B,H,W] ---- ---- ---- ---- 0000 0000 0000 0000			
0x70C	PZR3[B,H,W] ---- ---- ---- ---- 0000 0000 0000 0000			
0x710	PZR4[B,H,W] ---- ---- ---- ---- 0000 0000 0000 0000			
0x714	PZR5[B,H,W] ---- ---- ---- ---- 0000 0000 0000 0000			
0x718	PZR6[B,H,W] ---- ---- ---- ---- 0000 0000 0000 0000			
0x71C	PZR7[B,H,W] ---- ---- ---- ---- 0000 0000 0000 0000			
0x720	PZR8[B,H,W] ---- ---- ---- ---- 0000 0000 0000 0000			
0x724	PZR9[B,H,W] ---- ---- ---- ---- 0000 0000 0000 0000			
0x728	PZRA[B,H,W] ---- ---- ---- ---- 0000 0000 0000 0000			
0x72C	PZRB[B,H,W] ---- ---- ---- ---- 0000 0000 0000 0000			
0x730	PZRC[B,H,W] ---- ---- ---- ---- 0000 0000 0000 0000			
0x734	PZRD[B,H,W] ---- ---- ---- ---- 0000 0000 0000 0000			
0x738	PZRE[B,H,W] ---- ---- ---- ---- 0000 0000 0000 0000			
0x73C	PZRF[B,H,W] ---- ---- ---- ---- 0000 0000 0000 0000			
0x740	PDSR0[B,H,W] ---- ---- ---- ---- 0000 0000 0000 0000			
0x744	PDSR1[B,H,W] ---- ---- ---- ---- 0000 0000 0000 0000			
0x748	PDSR2[B,H,W] ---- ---- ---- ---- 0000 0000 0000 0000			
0x74C	PDSR3[B,H,W] ---- ---- ---- ---- 0000 0000 0000 0000			
0x750	PDSR4[B,H,W] ---- ---- ---- ---- 0000 0000 0000 0000			
0x754	PDSR5[B,H,W] ---- ---- ---- ---- 0000 0000 0000 0000			

Base_Address + Address	Register			
	+3	+2	+1	+0
0x758	PDSR6[B,H,W] ---- ---- ---- ---- 0000 0000 0000 0000			
0x75C	PDSR7[B,H,W] ---- ---- ---- ---- 0000 0000 0000 0000			
0x760	PDSR8[B,H,W] ---- ---- ---- ---- 0000 0000 0000 0000			
0x764	PDSR9[B,H,W] ---- ---- ---- ---- 0000 0000 0000 0000			
0x768	PDSRA[B,H,W] ---- ---- ---- ---- 0000 0000 0000 0000			
0x76C	PDSRB[B,H,W] ---- ---- ---- ---- 0000 0000 0000 0000			
0x770	PDSRC[B,H,W] ---- ---- ---- ---- 0000 0000 0000 0000			
0x774	PDSRD[B,H,W] ---- ---- ---- ---- 0000 0000 0000 0000			
0x778	PDSRE[B,H,W] ---- ---- ---- ---- 0000 0000 0000 0000			
0x77C	PDSRF[B,H,W] ---- ---- ---- ---- 0000 0000 0000 0000			
0x780 - 0xEFC	-	-	-	-
0xF00 – 0xF04	*			
0xF08 – 0xFDC	-	-	-	-
0xFE0	*			
0xFE4 - 0xFFC	-	-	-	-

1.21 LVD

LVD Base_Address : 0x4003_5000

Base_Address + Address	Register			
	+3	+2	+1	+0
0x000	-	-	-	LVD_CTL[B,H,W] 000111--
0x004	-	-	-	LVD_STR[B,H,W] 0-------
0x008	-	-	-	LVD_CLR[B,H,W] 1-------
0x00C	LVD_RLR[W] 00000000 00000000 00000000 00000001			
0x010	-	-	-	LVD_STR2 [B,H,W] 0-------
0x014 - 0x0FC	-	-	-	-

1.22 DS_Mode

DS_Mode Base_Address : 0x4003_5100

Base_Address + Address	Register			
	+3	+2	+1	+0
0x000	-	-	-	*
0x004	-	-	-	RCK_CTL[B,H,W] ------01
0x008 - 0x6FC	-	-	-	-
0x700	-	-	-	PMD_CTL[B,H,W] -------0
0x704	-	-	-	WRFSR[B,H,W] ------00
0x708	-	-	WIFSR[B,H,W] ------00 00000000	
0x70C	-	-	WIER[B,H,W] ------00 00000-00	
0x710	-	-	-	WILVR[B,H,W] ---00000
0x714	-	-	-	DSRAMR[B,H,W] ------00
0x718 - 0x7FC	-	-	-	-
0x800	BUR04[B,H,W] 00000000	BUR03[B,H,W] 00000000	BUR02[B,H,W] 00000000	BUR01[B,H,W] 00000000
0x804	BUR08[B,H,W] 00000000	BUR07[B,H,W] 00000000	BUR06[B,H,W] 00000000	BUR05[B,H,W] 00000000
0x808	BUR012[B,H,W] 00000000	BUR11[B,H,W] 00000000	BUR10[B,H,W] 00000000	BUR09[B,H,W] 00000000
0x80C	BUR16[B,H,W] 00000000	BUR15[B,H,W] 00000000	BUR14[B,H,W] 00000000	BUR13[B,H,W] 00000000
0x810 - 0xEFC	-	-	-	-

1.23 USB Clock

USB Clock Base_Address : 0x4003_6000

Base_Address + Address	Register			
	+3	+2	+1	+0
0x000	-	-	-	UCCR[B,H,W] -0000000
0x004	-	-	-	UPCR1[B,H,W] ------00
0x008	-	-	-	UPCR2[B,H,W] -----000
0x00C	-	-	-	UPCR3[B,H,W] ---00000
0x010	-	-	-	UPCR4[B,H,W] -0111011
0x014	-	-	-	UP_STR[B,H,W] -------0
0x018	-	-	-	UPINT_ENR[B,H,W] -------0
0x01C	-	-	-	UPINT_CLR[B,H,W] -------0
0x020	-	-	-	UPINT_STR[B,H,W] -------0
0x024	-	-	-	UPCR5[B,H,W] ----0100
0x028	-	-	-	UPCR6[B,H,W] ----0010
0x02C	-	-	-	UPCR7[B,H,W] -------0
0x030	-	-	-	USBEN0[B,H,W] -------0
0x034	-	-	-	USBEN1[B,H,W] -------0
0x038 - 0x0FC	-	-	-	-

1.24 CAN_Prescaler

CAN_Prescaler Base_Address : 0x4003_7000

Base_Address + Address	Register			
	+3	+2	+1	+0
0x000	-	-	-	CANPRE[B,H,W] ----1011
0x004 - 0xFFC	-	-	-	-

1.25 MFS

MFS ch.0 Base_Address : 0x4003_8000

MFS ch.1 Base_Address : 0x4003_8100

MFS ch.2 Base_Address : 0x4003_8200

MFS ch.3 Base_Address : 0x4003_8300

MFS ch.4 Base_Address : 0x4003_8400

MFS ch.5 Base_Address : 0x4003_8500

MFS ch.6 Base_Address : 0x4003_8600

MFS ch.7 Base_Address : 0x4003_8700

MFS ch.8 Base_Address : 0x4003_8800

MFS ch.9 Base_Address : 0x4003_8900

MFS ch.10Base_Address : 0x4003_8A00

MFS ch.11Base_Address : 0x4003_8B00

MFS ch.12Base_Address : 0x4003_8C00

MFS ch.13Base_Address : 0x4003_8D00

MFS ch.14Base_Address : 0x4003_8E00

MFS ch.15Base_Address : 0x4003_8F00

Base_Address + Address	Register			
	+3	+2	+1	+0
0x000	-	-	SCR / IBCR[B,H,W] 0--00000	SMR[B,H,W] 000-00-0
0x004	-	-	SSR[B,H,W] 0-000011	ESCR / IBSR[B,H,W] 00000000
0x008	-	-	RDR/TDR[H,W] 00000000 00000000	
	(*1) RDR/TDR[H,W] 00000000 00000000 00000000 00000000			

Base_Address + Address	Register			
	+3	+3	+3	+3
0x00C	-	-	BGR1[B,H,W] 00000000	BGR0[B,H,W] 00000000
0x010	-	-	ISMK[B,H,W] --------	ISBA[B,H,W] --------
0x014	-	-	FCR1[B,H,W] ---00100	FCR0[B,H,W] -0000000
0x018	-	-	FBYTE2[B,H,W] 00000000	FBYTE1[B,H,W] 00000000
0x01C	-	-	SCSTR1/ EIBCR[B,H,W] 00000000	SCSTR0/ NFCR[B,H,W] 00000000
0x020	-	-	SCSTR3[B,H,W] 00000000	SCSTR2[B,H,W] 00000000
0x024	-	-	SACSR1[B,H,W] 00000000	SACSR0[B,H,W] 00000000
0x028	-	-	STMR1[B,H,W] 00000000	STMR0[B,H,W] 00000000
0x02C	-	-	STMCR1[B,H,W] 00000000	STMCR0[B,H,W] 00000000
0x030	-	-	SCSCR1[B,H,W] 00000000	SCSCR0[B,H,W] 00100000
0x034	-	-	SCSFR1[B,H,W] 10000000	SCSFR0[B,H,W] 10000000
0x038	-	-	-	SCSFR2[B,H,W] 10000000
0x03C	-	-	TBYTE1[B,H,W] 00000000	TBYTE0[B,H,W] 00000000
0x040	-	-	TBYTE3[B,H,W] 00000000	TBYTE2[B,H,W] 00000000
0x0144 - 0x1FC	-	-	-	-

Note:

- *(*1): RDR/TDR register's higher 16 bits can be accessed by word operation in I2S mode.*

1.26 CRC

CRC Base_Address : 0x4003_9000

Base_Address	Register			
+ Address	+3	+2	+1	+0
0x000	-	-	-	CRCCR[B,H,W] -0000000
0x004	CRCINIT[B,H,W] 11111111 11111111 11111111 11111111			
0x008	CRCIN[B,H,W] 00000000 00000000 00000000 00000000			
0x00C	CRCR[B,H,W] 11111111 11111111 11111111 11111111			

1.27 Watch Counter

Watch Counter Base_Address : 0x4003_A000

Base_Address	Register			
+ Address	+3	+2	+1	+0
0x000	-	WCCR[B,H,W] 00--0000	WCRL[B,H,W] --000000	WCRD[B,H,W] --000000
0x004 - 0x00C	-	-	-	-
0x010	-	-	CLK_SEL[B,H,W] -----000 ------00	
0x014	-	-	-	CLK_EN[B,H,W] ------00
0x018 - 0xFFC	-	-	-	-

1.28 RTC

1.28.1 TYPE1-M4, TYPE2-M4, TYPE3-M4, TYPE6-M4 Products

RTC Base_Address : 0x4003_B000

Base_Address + Address	Register			
	+3	+2	+1	+0
0x100	-	-	-	WTCR10[B,H,W] 00000000
0x104	-	-	-	WTCR11[B,H,W] ---00000
0x108	-	-	-	WTCR12[B,H,W] 00000000
0x10C	-	-	-	WTCR13[B,H,W] 00000000
0x110	-	-	-	WTCR20[B,H,W] --000000
0x114	-	-	-	WTCR21[B,H,W] -----000
0x118	-	-	-	*
0x11C	-	-	-	WTSR[B,H,W] -0000000
0x120	-	-	-	WTMIR[B,H,W] -0000000
0x124	-	-	-	WTHR[B,H,W] --000000
0x128	-	-	-	WTDR[B,H,W] --000000
0x12C	-	-	-	WTDW[B,H,W] -----000
0x130	-	-	-	WTMOR[B,H,W] ---00000
0x134	-	-	-	WTYR[B,H,W] 00000000
0x138	-	-	-	ALMIR[B,H,W] -0000000
0x13C	-	-	-	ALHR[B,H,W] --000000
0x140	-	-	-	ALDR[B,H,W] --000000
0x144	-	-	-	ALMOR[B,H,W] ---00000
0x148	-	-	-	ALYR[B,H,W] 00000000
0x14C	-	-	-	WTTR0[B,H,W] 00000000
0x150	-	-	-	WTTR1[B,H,W] 00000000
0x154	-	-	-	WTTR2[B,H,W] ------00

Base_Address + Address	Register			
	+3	+2	+1	+0
0x158	-	-	-	WTCAL0[B,H,W] 00000000
0x15C	-	-	-	WTCAL1[B,H,W] ------00
0x160	-	-	-	WTCALEN[B,H,W] -------0
0x164	-	-	-	WTDIV[B,H,W] ----0000
0x168	-	-	-	WTDIVEN[B,H,W] ------00
0x16C	-	-	-	WTCALPRD[B,H,W] --010011
0x170	-	-	-	WTCOSEL[B,H,W] -------0
0x174	-	-	-	VB_CLKDIV[B,H,W] 00000111
0x178	-	-	-	WTOSCCNT[B,H,W] ------01
0x17C	-	-	-	CCS[B,H,W] 00001000
0x180	-	-	-	CCB[B,H,W] 00010000
0x184	-	-	-	*
0x188	-	-	-	BOOST[B,H,W] ------11
0x18C	-	-	-	EWKUP[B,H,W] -------0
0x190	-	-	-	VDET[B,H,W] 00------
0x194	-	-	-	*
0x198	-	-	-	HIBRST[B,H,W] -------0
0x19C	-	-	-	VBPFR[B,H,W] --011100
0x1A0	-	-	-	VBPCR[B,H,W] ----0000
0x1A4	-	-	-	VBDDR[B,H,W] ----XXXX
0x1A8	-	-	-	VBDIR[B,H,W] ----0000
0x1AC	-	-	-	VBDOR[B,H,W] ----1111
0x0B0	-	-	-	VBPZR[B,H,W] ------11
0x1B4-1FF	-	-	-	-

Base_Address + Address	Register			
	+3	+2	+1	+0
0x200	BREG03[B,H,W] 00000000	BREG02[B,H,W] 00000000	BREG01[B,H,W] 00000000	BREG00[B,H,W] 00000000
0x204	BREG07[B,H,W] 00000000	BREG06[B,H,W] 00000000	BREG05[B,H,W] 00000000	BREG04[B,H,W] 00000000
0x208	BREG0B[B,H,W] 00000000	BREG0A[B,H,W] 00000000	BREG09[B,H,W] 00000000	BREG08[B,H,W] 00000000
0x20C	BREG0F[B,H,W] 00000000	BREG0E[B,H,W] 00000000	BREG0D[B,H,W] 00000000	BREG0C[B,H,W] 00000000
0x210	BREG13[B,H,W] 00000000	BREG12[B,H,W] 00000000	BREG11[B,H,W] 00000000	BREG10[B,H,W] 00000000
0x214	BREG17[B,H,W] 00000000	BREG16[B,H,W] 00000000	BREG15[B,H,W] 00000000	BREG14[B,H,W] 00000000
0x218	BREG1B[B,H,W] 00000000	BREG1A[B,H,W] 00000000	BREG19[B,H,W] 00000000	BREG18[B,H,W] 00000000
0x21C	BREG1F[B,H,W] 00000000	BREG1E[B,H,W] 00000000	BREG1D[B,H,W] 00000000	BREG1C[B,H,W] 00000000
0x220	BREG23[B,H,W] 00000000	BREG22[B,H,W] 00000000	BREG21[B,H,W] 00000000	BREG20[B,H,W] 00000000
0x224	BREG27[B,H,W] 00000000	BREG26[B,H,W] 00000000	BREG25[B,H,W] 00000000	BREG24[B,H,W] 00000000
0x228	BREG2B[B,H,W] 00000000	BREG2A[B,H,W] 00000000	BREG29[B,H,W] 00000000	BREG28[B,H,W] 00000000
0x22C	BREG2F[B,H,W] 00000000	BREG2E[B,H,W] 00000000	BREG2D[B,H,W] 00000000	BREG2C[B,H,W] 00000000
0x230	BREG33[B,H,W] 00000000	BREG32[B,H,W] 00000000	BREG31[B,H,W] 00000000	BREG30[B,H,W] 00000000
0x234	BREG37[B,H,W] 00000000	BREG36[B,H,W] 00000000	BREG35[B,H,W] 00000000	BREG34[B,H,W] 00000000
0x238	BREG3B[B,H,W] 00000000	BREG3A[B,H,W] 00000000	BREG39[B,H,W] 00000000	BREG38[B,H,W] 00000000
0x23C	BREG3F[B,H,W] 00000000	BREG3E[B,H,W] 00000000	BREG3D[B,H,W] 00000000	BREG3C[B,H,W] 00000000
0x240	BREG43[B,H,W] 00000000	BREG42[B,H,W] 00000000	BREG41[B,H,W] 00000000	BREG40[B,H,W] 00000000
0x244	BREG47[B,H,W] 00000000	BREG46[B,H,W] 00000000	BREG45[B,H,W] 00000000	BREG44[B,H,W] 00000000
0x248	BREG4B[B,H,W] 00000000	BREG4A[B,H,W] 00000000	BREG49[B,H,W] 00000000	BREG48[B,H,W] 00000000
0x24C	BREG4F[B,H,W] 00000000	BREG4E[B,H,W] 00000000	BREG4D[B,H,W] 00000000	BREG4C[B,H,W] 00000000
0x250	BREG53[B,H,W] 00000000	BREG52[B,H,W] 00000000	BREG51[B,H,W] 00000000	BREG50[B,H,W] 00000000
0x254	BREG57[B,H,W] 00000000	BREG56[B,H,W] 00000000	BREG55[B,H,W] 00000000	BREG54[B,H,W] 00000000
0x258	BREG5B[B,H,W] 00000000	BREG5A[B,H,W] 00000000	BREG59[B,H,W] 00000000	BREG58[B,H,W] 00000000

Base_Address + Address	Register			
	+3	+2	+1	+0
0x25C	BREG5F[B,H,W] 00000000	BREG5E[B,H,W] 00000000	BREG5D[B,H,W] 00000000	BREG5C[B,H,W] 00000000
0x260	BREG63[B,H,W] 00000000	BREG62[B,H,W] 00000000	BREG61[B,H,W] 00000000	BREG60[B,H,W] 00000000
0x264	BREG67[B,H,W] 00000000	BREG66[B,H,W] 00000000	BREG65[B,H,W] 00000000	BREG64[B,H,W] 00000000
0x268	BREG6B[B,H,W] 00000000	BREG6A[B,H,W] 00000000	BREG69[B,H,W] 00000000	BREG68[B,H,W] 00000000
0x26C	BREG6F[B,H,W] 00000000	BREG6E[B,H,W] 00000000	BREG6D[B,H,W] 00000000	BREG6C[B,H,W] 00000000
0x270	BREG73[B,H,W] 00000000	BREG72[B,H,W] 00000000	BREG71[B,H,W] 00000000	BREG70[B,H,W] 00000000
0x274	BREG77[B,H,W] 00000000	BREG76[B,H,W] 00000000	BREG75[B,H,W] 00000000	BREG74[B,H,W] 00000000
0x278	BREG7B[B,H,W] 00000000	BREG7A[B,H,W] 00000000	BREG79[B,H,W] 00000000	BREG78[B,H,W] 00000000
0x27C	BREG7F[B,H,W] 00000000	BREG7E[B,H,W] 00000000	BREG7D[B,H,W] 00000000	BREG7C[B,H,W] 00000000
0x280-0xFFC	-	-	-	-

1.28.2 TYPE4-M4 Product

RTC Base_Address : 0x4003_B000

Base_Address + Address	Register			
	+3	+2	+1	+0
0x100	-	-	-	WTCR10[B,H,W] 00000000
0x104	-	-	-	WTCR11[B,H,W] ---00000
0x108	-	-	-	WTCR12[B,H,W] 00000000
0x10C	-	-	-	WTCR13[B,H,W] 00000000
0x110	-	-	-	WTCR20[B,H,W] --000000
0x114	-	-	-	WTCR21[B,H,W] -----000
0x118	-	-	-	*
0x11C	-	-	-	WTSR[B,H,W] -0000000
0x120	-	-	-	WTMIR[B,H,W] -0000000
0x124	-	-	-	WTHR[B,H,W] --000000

Base_Address + Address	Register			
	+3	+2	+1	+0
0x128	-	-	-	WTDR[B,H,W] --000000
0x12C	-	-	-	WTDW[B,H,W] -----000
0x130	-	-	-	WTMOR[B,H,W] ---00000
0x134	-	-	-	WTYR[B,H,W] 00000000
0x138	-	-	-	ALMIR[B,H,W] -0000000
0x13C	-	-	-	ALHR[B,H,W] --000000
0x140	-	-	-	ALDR[B,H,W] --000000
0x144	-	-	-	ALMOR[B,H,W] ---00000
0x148	-	-	-	ALYR[B,H,W] 00000000
0x14C	-	-	-	WTTR0[B,H,W] 00000000
0x150	-	-	-	WTTR1[B,H,W] 00000000
0x154	-	-	-	WTTR2[B,H,W] ------00
0x158	-	-	-	WTCAL0[B,H,W] 00000000
0x15C	-	-	-	WTCAL1[B,H,W] ------00
0x160	-	-	-	WTCALEN[B,H,W] -------0
0x164	-	-	-	WTDIV[B,H,W] ----0000
0x168	-	-	-	WTDIVEN[B,H,W] ------00
0x16C	-	-	-	WTCALPRD[B,H,W] --010011
0x170	-	-	-	WTCOSEL[B,H,W] -------0
0x174	-	-	-	VB_DIVCLK[B,H,W] 00000111
0x178	-	-	-	WTOSCCNT[B,H,W] ------01
0x17C	-	-	-	CCS[B,H,W] 11001110
0x180	-	-	-	CCB[B,H,W] 11001110

Base_Address + Address	Register			
	+3	+2	+1	+0
0x184	-	-	-	*
0x188	-	-	-	BOOST[B,H,W] ------11
0x18C	-	-	-	EWKUP[B,H,W] -------0
0x190	-	-	-	VDET[B,H,W] 00------
0x194	-	-	-	*
0x198	-	-	-	HIBRST[B,H,W] -------0
0x19C	-	-	-	VBPFR[B,H,W] --011100
0x1A0	-	-	-	VBPCR[B,H,W] ----0000
0x1A4	-	-	-	VBDDR[B,H,W] ----0000
0x1A8	-	-	-	VBDIR[B,H,W] ----XXXX
0x1AC	-	-	-	VBDOR[B,H,W] ----1111
0x1B0	-	-	-	VBPZR[B,H,W] ------11
0x1B4-1FF	-	-	-	-
0x200	BREG03[B,H,W]	BREG02[B,H,W]	BREG01[B,H,W]	BREG00[B,H,W]
	00000000	00000000	00000000	00000000
0x204	BREG07[B,H,W]	BREG06[B,H,W]	BREG05[B,H,W]	BREG04[B,H,W]
	00000000	00000000	00000000	00000000
0x208	BREG0B[B,H,W]	BREG0A[B,H,W]	BREG09[B,H,W]	BREG08[B,H,W]
	00000000	00000000	00000000	00000000
0x20C	BREG0F[B,H,W]	BREG0E[B,H,W]	BREG0D[B,H,W]	BREG0C[B,H,W]
	00000000	00000000	00000000	00000000
0x210	BREG13[B,H,W]	BREG12[B,H,W]	BREG11[B,H,W]	BREG10[B,H,W]
	00000000	00000000	00000000	00000000
0x214	BREG17[B,H,W]	BREG16[B,H,W]	BREG15[B,H,W]	BREG14[B,H,W]
	00000000	00000000	00000000	00000000
0x218	BREG1B[B,H,W]	BREG1A[B,H,W]	BREG19[B,H,W]	BREG18[B,H,W]
	00000000	00000000	00000000	00000000
0x21C	BREG1F[B,H,W]	BREG1E[B,H,W]	BREG1D[B,H,W]	BREG1C[B,H,W]
	00000000	00000000	00000000	00000000
0x220	BREG23[B,H,W]	BREG22[B,H,W]	BREG21[B,H,W]	BREG20[B,H,W]
	00000000	00000000	00000000	00000000
0x224	BREG27[B,H,W]	BREG26[B,H,W]	BREG25[B,H,W]	BREG24[B,H,W]
	00000000	00000000	00000000	00000000
0x228	BREG2B[B,H,W]	BREG2A[B,H,W]	BREG29[B,H,W]	BREG28[B,H,W]
	00000000	00000000	00000000	00000000
0x22C	BREG2F[B,H,W]	BREG2E[B,H,W]	BREG2D[B,H,W]	BREG2C[B,H,W]

Base_Address + Address	Register			
	+3	+2	+1	+0
	00000000	00000000	00000000	00000000
0x230	BREG33[B,H,W]	BREG32[B,H,W]	BREG31[B,H,W]	BREG30[B,H,W]
	00000000	00000000	00000000	00000000
0x234	BREG37[B,H,W]	BREG36[B,H,W]	BREG35[B,H,W]	BREG34[B,H,W]
	00000000	00000000	00000000	00000000
0x238	BREG3B[B,H,W]	BREG3A[B,H,W]	BREG39[B,H,W]	BREG38[B,H,W]
	00000000	00000000	00000000	00000000
0x23C	BREG3F[B,H,W]	BREG3E[B,H,W]	BREG3D[B,H,W]	BREG3C[B,H,W]
	00000000	00000000	00000000	00000000
0x240	BREG43[B,H,W]	BREG42[B,H,W]	BREG41[B,H,W]	BREG40[B,H,W]
	00000000	00000000	00000000	00000000
0x244	BREG47[B,H,W]	BREG46[B,H,W]	BREG45[B,H,W]	BREG44[B,H,W]
	00000000	00000000	00000000	00000000
0x248	BREG4B[B,H,W]	BREG4A[B,H,W]	BREG49[B,H,W]	BREG48[B,H,W]
	00000000	00000000	00000000	00000000
0x24C	BREG4F[B,H,W]	BREG4E[B,H,W]	BREG4D[B,H,W]	BREG4C[B,H,W]
	00000000	00000000	00000000	00000000
0x250	BREG53[B,H,W]	BREG52[B,H,W]	BREG51[B,H,W]	BREG50[B,H,W]
	00000000	00000000	00000000	00000000
0x254	BREG57[B,H,W]	BREG56[B,H,W]	BREG55[B,H,W]	BREG54[B,H,W]
	00000000	00000000	00000000	00000000
0x258	BREG5B[B,H,W]	BREG5A[B,H,W]	BREG59[B,H,W]	BREG58[B,H,W]
	00000000	00000000	00000000	00000000
0x25C	BREG5F[B,H,W]	BREG5E[B,H,W]	BREG5D[B,H,W]	BREG5C[B,H,W]
	00000000	00000000	00000000	00000000
0x260	BREG63[B,H,W]	BREG62[B,H,W]	BREG61[B,H,W]	BREG60[B,H,W]
	00000000	00000000	00000000	00000000
0x264	BREG67[B,H,W]	BREG66[B,H,W]	BREG65[B,H,W]	BREG64[B,H,W]
	00000000	00000000	00000000	00000000
0x268	BREG6B[B,H,W]	BREG6A[B,H,W]	BREG69[B,H,W]	BREG68[B,H,W]
	00000000	00000000	00000000	00000000
0x26C	BREG6F[B,H,W]	BREG6E[B,H,W]	BREG6D[B,H,W]	BREG6C[B,H,W]
	00000000	00000000	00000000	00000000
0x270	BREG73[B,H,W]	BREG72[B,H,W]	BREG71[B,H,W]	BREG70[B,H,W]
	00000000	00000000	00000000	00000000
0x274	BREG77[B,H,W]	BREG76[B,H,W]	BREG75[B,H,W]	BREG74[B,H,W]
	00000000	00000000	00000000	00000000
0x278	BREG7B[B,H,W]	BREG7A[B,H,W]	BREG79[B,H,W]	BREG78[B,H,W]
	00000000	00000000	00000000	00000000
0x27C	BREG7F[B,H,W]	BREG7E[B,H,W]	BREG7D[B,H,W]	BREG7C[B,H,W]
	00000000	00000000	00000000	00000000
0x280-0xFFC	-	-	-	-

1.28.3 TYPE5-M4 Product

RTC Base_Address : 0x4003_B000

Base_Address + Address	Register			
	+3	+2	+1	+0
0x000	WTCR1 [B,H,W] 00000000 00000000 ---00000 -00000-0			
0x004	WTCR2[B,H,W] -------- -------- -----000 -------0			
0x008	WTBR [B,H,W] -------- 00000000 00000000 00000000			
0x00C	WTDR[B,H,W] --000000	WTHR[B,H,W] --000000	WTMIR[B,H,W] -0000000	WTSR[B,H,W] -0000000
0x010	-	WTYR[B,H,W] 00000000	WTMOR[B,H,W] ---00000	WTDW[B,H,W] -----000
0x014	ALDR[B,H,W] --000000	ALHR[B,H,W] --000000	ALMIR[B,H,W] -0000000	-
0x018	-	ALYR[B,H,W] 00000000	ALMOR[B,H,W] ---00000	-
0x01C	WTTR [B,H,W] -------- ------00 00000000 00000000			
0x020	-	-	WTCLKM[B,H,W] ------00	WTCLKS[B,H,W] -------0
0x024	-	WTCALEN[B,H,W] -------0	WTCAL[B,H,W] ------00 00000000	
0x028	-	-	WTDIVEN[B,H,W] ------00	WTDIV[B,H,W] ----0000
0x02C	-	-	-	WTCALPRD[B,H,W], --010011
0x030	-	-	-	WTCOSEL[B,H,W], -------0
0x034-0x0FF	-	-	-	-

1.29 Low-speed CR Prescaler

Low-speed CR Prescaler Base_Address : 0x4003_C000

Base_Address + Address	Register			
	+3	+2	+1	+0
0x000	-	-	-	LCR_PRSLD[B,H,W], --000000
0x004 – 0x0FC	-	-	-	-

1.30 Peripheral Clock Gating

1.30.1 TYPE1-M1, TYPE2-M4 Products

Peripheral Clock Gating **Base_Address : 0x4003_C100**

Base_Address + Address	Register			
	+3	+2	+1	+0
0x000	CKEN0[B,H,W] ---1-1-1 ----1111 11111111 11111111			
0x004	MRST0[B,H,W] -----0-0 ----0000 00000000 00000000			
0x008 – 0x00F	-	-	-	-
0x010	CKEN1[B,H,W] -------- ----1111 ----1111 ----1111			
0x014	MRST1[B,H,W] -------- ----0000 ----0000 ----0000			
0x018 – 0x01F	-	-	-	-
0x020	CKEN2[B,H,W] -------- -------- -------0 --**--00 Products with CAN : *="1" Products without CAN : *="0"			
0x024	MRST2[B,H,W] -------- -------- -------0 --00--00			
0x028 – 0x67C	-	-	-	-

1.30.2 TYPE3-M4, TYPE4-M4 Products

Peripheral Clock Gating **Base_Address : 0x4003_C100**

Base_Address + Address	Register			
	+3	+2	+1	+0
0x000	CKEN0[B,H,W] ---1-1-1 ----1111 11111111 11111111			
0x004	MRST0[B,H,W] -----0-0 ----0000 00000000 00000000			
0x008 – 0x00F	-	-	-	-
0x010	CKEN1[B,H,W] -------- ----1111 ----1111 ----1111			
0x014	MRST1[B,H,W] -------- ----0000 ----0000 ----0000			
0x018 – 0x01F	-	-	-	-
0x020	CKEN2[B,H,W] ---0--11 ---1--00 -------0 -***--00 Products with : *="1" Products without CAN : *="0"			
0x024	MRST2[B,H,W] ---0--00 ---0--00 -------0 -000--00			
0x028 – 0x67C	-	-	-	-

1.30.3 TYPE5-M4, TYPE6-M4 Products

Peripheral Clock Gating **Base_Address : 0x4003_C100**

Base_Address + Address	Register			
	+3	+2	+1	+0
0x000	CKEN0[B,H,W] ---1-1-1 ----1111 11111111 11111111			
0x004	MRST0[B,H,W] -----0-0 ----0000 00000000 00000000			
0x008 – 0x00F	-	-	-	-
0x010	CKEN1[B,H,W] -------- ----1111 ----1111 ----1111			
0x014	MRST1[B,H,W] -------- ----0000 ----0000 ----0000			
0x018 – 0x01F	-	-	-	-
0x020	CKEN2[B,H,W] ---0--11 ---1--00 1111---0 -***--00 Products with : *="1" Products without CAN : *="0"			
0x024	MRST2[B,H,W] ---0--00 ---0--00 0000---0 -000--00			
0x028 – 0x67C	-	-	-	-

1.31 Smart Card Interface

Smart Card Interface ch.0 Base_Address : 0x4003_C900

Smart Card Interface ch.1 Base_Address : 0x4003_C980

Base_Address + Address	Register			
	+3	+2	+1	+0
0x00	-	-	GLOBALCONTROL1[H,W] -0001000 00000000	
0x04	-	-	STATUS[H,W] --000000 00000001	
0x08	-	-	PORTCONTROL[H,W] 0000--00 00-0-0-0	
0x0C	-	-	DATA[H,W] -------0 00000000	
0x10	-	-	CARDCLOCK [H,W] 00000000 00101000	
0x14	-	-	BAUDRATE[H,W] 0000001 01110100	
0x18	-	-	GUARDTIMER[H,W] -------- 00000000	
0x1C	-	-	IDLETIMER[H,W] 00000000 00000000	
0x20	-	-	GLOBALCONTROL2[H,W] -------- ----1-00	
0x24	-	-	DATA_FIFO[H,W] -------0 00000000	
0x28	-	-	FIFO_LEVEL_READ[H,W] 00000000 00000000	
0x2C	-	-	FIFO_LEVEL_WRITE[H,W] 00000000 00000000	
0x30	-	-	FIFO_MODE[H,W] 00000000 ----0000	
0x34	-	-	FIFO_CLEAR_MSB_WRITE[H,W] -------- -------0	
0x38	-	-	FIFO_CLEAR_MSB_ READ[H,W] -------- -------0	
0x3C	-	-	-	-
0x40	-	-	IRQ_STATUS[H,W] -------- 00000000	
0x44- 0x7C	-	-	-	-

1.32 MFSI2S

MFSI2S ch.A Base_Address : 0x4003_CA00

Base_Address + Address	Register			
	+3	+2	+1	+0
0x00	-	-	CNTLREG[B, H,W] -----0-0 -0000-01	
0x04	-	-	I2SCLK[B, H,W] 00------ 00000000	
0x08	-	-	I2SST[B,H,W] ------00	I2SRST[B,H,W] 00000000
0x0C- 0xFC	-	-	-	-

Note:

- *In TYPE5-M4 product, MFSI2S ch.A applies to MFS ch.1.*

1.33 I2S Prescaler

1.33.1 TYPE1-M4, TYPE2-M4, TYPE3-M4 Products

I2S_Prescaler **Base_Address : 0x4003_D000**

Base_Address + Address	Register			
	+3	+2	+1	+0
0x000	ICCR[B,H,W] -------- -------- -------- ------00			
0x004	IPCR1[B,H,W] -------- -------- -------- -------0			
0x008	IPCR2[B,H,W] -------- -------- -------- -----000			
0x00C	IPCR3[B,H,W] -------- -------- -------- ---00001			
0x010	IPCR4[B,H,W] -------- -------- -------- -0011111			
0x014	IP_STR[B,H,W] -------- -------- -------- -------0			
0x018	IPINT_ENR[B,H,W] -------- -------- -------- -------0			
0x01C	IPINT_CLR[B,H,W] -------- -------- -------- -------0			
0x020	IPINT_STR[B,H,W] -------- -------- -------- -------0			
0x024	IPCR5[B,H,W] -------- -------- -------- -0011000			
0x028 – 0xFFC	-	-	-	-

1.33.2 TYPE4-M4 Product

I2S_Prescaler **Base_Address : 0x4003_D000**

Base_Address + Address	Register			
	+3	+2	+1	+0
0x000	ICCR[B,H,W] -------- -------- -------- ------00			
0x004	IPCR1[B,H,W] -------- -------- -------- -------0			
0x008	IPCR2[B,H,W] -------- -------- -------- -----000			
0x00C	IPCR3[B,H,W] -------- -------- -------- ---00001			
0x010	IPCR4[B,H,W] -------- -------- -------- -0011111			
0x014	IP_STR[B,H,W] -------- -------- -------- -------0			
0x018	IPINT_ENR[B,H,W] -------- -------- -------- -------0			
0x01C	IPINT_CLR[B,H,W] -------- -------- -------- -------0			
0x020	IPINT_STR[B,H,W] -------- -------- -------- -------0			
0x024	IPCR5[B,H,W] -------- -------- -------- -0011000			
0x028 – 0x02C	-	-	-	-
0x030	ICCR_1[B,H,W] -------- -------- -------- -----000			
0x034	IPCR5_1[B,H,W] -------- -------- -------- -0000000			
0x038 – 0xFFC	-	-	-	-

1.34 GDC_Prescaler

GDC_Prescaler Base_Address : 0x4003_D100

Base_Address + Address	Register			
	+3	+2	+1	+0
0x000	GCCR[B,H,W] -------- -------- -------- -------0			
0x004	GPCR1[B,H,W] -------- -------- -------- ------00			
0x008	GPCR2[B,H,W] -------- -------- -------- -----000			
0x00C	GPCR3 [B,H,W] -------- -------- -------- ---00000			
0x010	GPCR4 [B,H,W] -------- -------- -------- -0000000			
0x014	GP_STR[B,H,W] -------- -------- -------- -------0			
0x018	GPINT_ENR[B,H,W] -------- -------- -------- -------0			
0x01C	GPINT_CLR[B,H,W] -------- -------- -------- -------0			
0x020	GPINT_STR[B,H,W] -------- -------- -------- -------0			
0x024	-	-	-	-
0x028	GCSR[B,H,W] -------- -------- ---0---0 ---0--00			
0x02C	GRCR[B,H,W] -------- -------- -------- -------0			
0x030	GMCR[B,H,W] -------- -------- -------- -------0			
0x034- 0xFFC	-	-	-	-

Note:

- *For the register details of GDC, refer to the Chapter:GDC.*

1.35 EXT-Bus I/F

1.35.1 TYPE1-M4 Product

EXT-Bus I/F Base_Address : 0x4003_F000

Base_Address + Address	Register			
	+3	+2	+1	+0
0x0000	MODE0[W] -------- -------- --000-00 00000000			
0x0004	MODE1[W] -------- -------- --000-00 00000000			
0x0008	MODE2[W] -------- -------- --000-00 00000000			
0x000C	MODE3[W] -------- -------- --000-00 00000000			
0x0010	MODE4[W] -------- -------- --000-00 00000001			
0x0014	MODE5[W] -------- -------- --000-00 00000000			
0x0018	MODE6[W] -------- -------- --000-00 00000000			
0x001C	MODE7[W] -------- -------- --000-00 00000000			
0x0020	TIM0[W] 00000101 01011111 11110000 00001111			
0x0024	TIM1[W] 00000101 01011111 11110000 00001111			
0x0028	TIM2[W] 00000101 01011111 11110000 00001111			
0x002C	TIM3[W] 00000101 01011111 11110000 00001111			
0x0030	TIM4[W] 00000101 01011111 11110000 00001111			
0x0034	TIM5[W] 00000101 01011111 11110000 00001111			
0x0038	TIM6[W] 00000101 01011111 11110000 00001111			
0x003C	TIM7[W] 00000101 01011111 11110000 00001111			

Base_Address + Address	Register			
	+3	+2	+1	+0
0x0040	AREA0[W] -------- -0001111 -------- 00000000			
0x0044	AREA1[W] -------- -0001111 -------- 00010000			
0x0048	AREA2[W] -------- -0001111 -------- 00100000			
0x004C	AREA3[W] -------- -0001111 -------- 00110000			
0x0050	AREA4[W] -------- -0001111 -------- 01000000			
0x0054	AREA5[W] -------- -0001111 -------- 01010000			
0x0058	AREA6[W] -------- -0001111 -------- 01100000			
0x005C	AREA7[W] -------- -0001111 -------- 01110000			
0x0060	ATIM0[W] -------- -------- ----0100 01011111			
0x0064	ATIM1[W] -------- -------- ----0100 01011111			
0x0068	ATIM2[W] -------- -------- ----0100 01011111			
0x006C	ATIM3[W] -------- -------- ----0100 01011111			
0x0070	ATIM4[W] -------- -------- ----0100 01011111			
0x0074	ATIM5[W] -------- -------- ----0100 01011111			
0x0078	ATIM6[W] -------- -------- ----0100 01011111			
0x007C	ATIM7[W] -------- -------- ----0100 01011111			
0x0080 - 0x00FC	-	-	-	-
0x0100	SDMODE[W] -------- -------0 00010011 --00-000			
0x0104	REFTIM[W] -------0 00000000 0000000000110011			
0x0108	PWRDWN[W] -------- -------- 00000000 00000000			
0x010C	SDTIM[W] ------00 01000010 00010001 0100--01			
0x0110	SDCMD[W] 0------- ---00000 00000000 00000000			
0x0114 - 0x01FC	-	-	-	-

A. Register Map

Base_Address + Address	Register			
	+3	+ 2	+1	+ 0
0x0200	MEMCERR[W] -------- -------- -------- ----0000			
0x0204 – 0x02FC	-	-	-	-
0x0300	DCLKR[W] -------- -------- -------- ---01111			
0x0304	EST -------- -------- -------- -------0			
0x0308	WEAD 00000000 00000000 000000000 00000000			
0x030C	ESCLR[W] -------- -------- -------- -------1			
0x0310	AMODE[W] -------- -------- -------- -------1			
0x031C - 0x0EFC	-	-	-	-
0x0F00 – 0x0F14	*	*	*	*
0x0F18 – 0x0FFC	-	-	-	-

1.35.2 TYPE3-M4, TYPE4-M4, TYPE5-M4, TYPE6-M4 Products

EXT-Bus I/F Base_Address : 0x4003_F000

Base_Address + Address	Register			
	+3	+2	+1	+0
0x0000	MODE0[W] -------- -------- --000-00 00000000			
0x0004	MODE1[W] -------- -------- --000-00 00000000			
0x0008	MODE2[W] -------- -------- --000-00 00000000			
0x000C	MODE3[W] -------- -------- --000-00 00000000			
0x0010	MODE4[W] -------- -------- --000-00 00000001			
0x0014	MODE5[W] -------- -------- --000-00 00000000			
0x0018	MODE6[W] -------- -------- --000-00 00000000			
0x001C	MODE7[W] -------- -------- --000-00 00000000			
0x0020	TIM0[W] 00000101 01011111 11110000 00001111			
0x0024	TIM1[W] 00000101 01011111 11110000 00001111			
0x0028	TIM2[W] 00000101 01011111 11110000 00001111			
0x002C	TIM3[W] 00000101 01011111 11110000 00001111			
0x0030	TIM4[W] 00000101 01011111 11110000 00001111			
0x0034	TIM5[W] 00000101 01011111 11110000 00001111			
0x0038	TIM6[W] 00000101 01011111 11110000 00001111			
0x003C	TIM7[W] 00000101 01011111 11110000 00001111			

Base_Address + Address	Register			
	+3	+2	+1	+0
0x0040	AREA0[W] -------- -0001111 -------- 00000000			
0x0044	AREA1[W] -------- -0001111 -------- 00010000			
0x0048	AREA2[W] -------- -0001111 -------- 00100000			
0x004C	AREA3[W] -------- -0001111 -------- 00110000			
0x0050	AREA4[W] -------- -0001111 -------- 01000000			
0x0054	AREA5[W] -------- -0001111 -------- 01010000			
0x0058	AREA6[W] -------- -0001111 -------- 01100000			
0x005C	AREA7[W] -------- -0001111 -------- 01110000			
0x0060	ATIM0[W] -------- -------- ----0100 01011111			
0x0064	ATIM1[W] -------- -------- ----0100 01011111			
0x0068	ATIM2[W] -------- -------- ----0100 01011111			
0x006C	ATIM3[W] -------- -------- ----0100 01011111			
0x0070	ATIM4[W] -------- -------- ----0100 01011111			
0x0074	ATIM5[W] -------- -------- ----0100 01011111			
0x0078	ATIM6[W] -------- -------- ----0100 01011111			
0x007C	ATIM7[W] -------- -------- ----0100 01011111			
0x0080 - 0x00FC	-	-	-	-
0x0100	SDMODE[W] -------- -------0 00010011 --00-000			
0x0104	REFTIM[W] -------0 00000000 0000000000110011			
0x0108	PWRDWN[W] -------- -------- 00000000 00000000			
0x010C	SDTIM[W] 0-----00 01000010 00010001 0100--01			
0x0110	SDCMD[W] 0------- ---00000 00000000 00000000			
0x0114 - 0x01FC	-	-	-	-

Base_Address + Address	Register			
	+3	+ 2	+1	+ 0
0x0200	MEMCERR[W] -------- -------- -------- ----0000			
0x0204 – 0x02FC	-	-	-	-
0x0300	DCLKR[W] -------- -------- -------- ---01111			
0x0304	EST -------- -------- -------- -------0			
0x0308	WEAD 00000000 00000000 000000000 00000000			
0x030C	ESCLR[W] -------- -------- -------- -------1			
0x0310	AMODE[W] -------- -------- -------- -------1			
0x031C - 0x0EFC	-	-	-	-
0x0F00 – 0x0F14	*	*	*	*
0x0F18 – 0x0FFC	-	-	-	-

1.36 USB

USB ch.0 Base_Address : 0x4004_0000

USB ch.1 Base_Address : 0x4005_0000

Base_Address + Address	Register			
	+3	+2	+1	+0
0x2100	-	-	HCNT1[B,H,W] -----001	HCNT0[B,H,W] 00000000
0x2104	-	-	HERR[B,H,W] 00000011	HIRQ[B,H,W] 0-000000
0x2108	-	-	HFCOMP[B,H,W] 00000000	HSTATE[B,H,W] --010010
0x210C	-	-	HRTIMER(1/0)[B,H,W] 00000000 00000000	
0x2110	-	-	HADR[B,H,W] -0000000	HRTIMER(2)[B,H,W] ------00
0x2114	-	-	HEOF(1/0)[B,H,W] --000000 00000000	
0x2118	-	-	HFRAME(1/0)[B,H,W] -----000 00000000	
0x211C	-	-	-	HTOKEN[B,H,W] 00000000
0x2120	-	-	UDCC[B,H,W] -------- 10100-00	
0x2124	-	-	EP0C[H,W] ------0- -1000000	
0x2128	-	-	EP1C[H,W] 01100001 00000000	
0x212C	-	-	EP2C[H,W] 0110000- -1000000	
0x2130	-	-	EP3C[H,W] 0110000- -1000000	
0x2134	-	-	EP4C[H,W] 0110000- -1000000	
0x2138	-	-	EP5C[H,W] 0110000- -1000000	
0x213C	-	-	TMSP[H,W] -----000 00000000	
0x2140	-	-	UDCIE[B,H,W] --000000	UDCS[B,H,W] --000000
0x2144	-	-	EP0IS[H,W] 10---1-- --------	
0x2148	-	-	EP0OS[H,W] 100--00- -XXXXXXX	
0x214C	-	-	EP1S[H,W] 100-000X XXXXXXXX	

Base_Address + Address	Register			
	+3	+2	+1	+0
0x2150	-	-	EP2S[H,W] 100-000- -XXXXXXX	
0x2154	-	-	EP3S[H,W] 100-000- -XXXXXXX	
0x2158	-	-	EP4S[H,W] 100-000- -XXXXXXX	
0x215C	-	-	EP5S[H,W] 100-000- -XXXXXXX	
0x2160	-	-	EP0DTH[B,H,W] XXXXXXXX	EP0DTL[B,H,W] XXXXXXXX
0x2164	-	-	EP1DTH[B,H,W] XXXXXXXX	EP1DTL[B,H,W] XXXXXXXX
0x2168	-	-	EP2DTH[B,H,W] XXXXXXXX	EP2DTL[B,H,W] XXXXXXXX
0x216C	-	-	EP3DTH[B,H,W] XXXXXXXX	EP3DTL[B,H,W] XXXXXXXX
0x2170	-	-	EP4DTH[B,H,W] XXXXXXXX	EP4DTL[B,H,W] XXXXXXXX
0x2174	-	-	EP5DTH[B,H,W] XXXXXXXX	EP5DTL[B,H,W] XXXXXXXX
0x2178 - 0x217C	-	-	-	-

1.37 DMAC

DMAC Base_Address : 0x4006_0000

Base_Address + Address	Register			
	+3	+2	+1	+0
0x0000	DMACR[B,H,W] 00-00000 -------- -------- --------			
0x0010	DMACA0[B,H,W] 00000000 0---0000 00000000 00000000			
0x0014	DMACB0[B,H,W] --000000 00000000 00000000 -------0			
0x0018	DMACSA0[B,H,W] 00000000 00000000 00000000 00000000			
0x001C	DMACDA0[B,H,W] 00000000 00000000 00000000 00000000			
0x0020	DMACA1[B,H,W] 00000000 0---0000 00000000 00000000			
0x0024	DMACB1[B,H,W] --000000 00000000 00000000 -------0			
0x0028	DMACSA1[B,H,W] 00000000 00000000 00000000 00000000			
0x002C	DMACDA1[B,H,W] 00000000 00000000 00000000 00000000			
0x0030	DMACA2[B,H,W] 00000000 0---0000 00000000 00000000			
0x0034	DMACB2[B,H,W] --000000 00000000 00000000 -------0			
0x0038	DMACSA2[B,H,W] 00000000 00000000 00000000 00000000			
0x003C	DMACDA2[B,H,W] 00000000 00000000 00000000 00000000			
0x0040	DMACA3[B,H,W] 00000000 0---0000 00000000 00000000			
0x0044	DMACB3[B,H,W] --000000 00000000 00000000 -------0			
0x0048	DMACSA3[B,H,W] 00000000 00000000 00000000 00000000			
0x004C	DMACDA3[B,H,W] 00000000 00000000 00000000 00000000			
0x0050	DMACA4[B,H,W] 00000000 0---0000 00000000 00000000			
0x0054	DMACB4[B,H,W] --000000 00000000 00000000 -------0			
0x0058	DMACSA4[B,H,W] 00000000 00000000 00000000 00000000			
0x005C	DMACDA4[B,H,W] 00000000 00000000 00000000 00000000			
0x0060	DMACA5[B,H,W] 00000000 0---0000 00000000 00000000			

Base_Address + Address	Register			
	+3	+2	+1	+0
0x0064	DMACB5[B,H,W] --000000 00000000 00000000 -------0			
0x0068	DMACSA5[B,H,W] 00000000 00000000 00000000 00000000			
0x006C	DMACDA5[B,H,W] 00000000 00000000 00000000 00000000			
0x0070	DMACA6[B,H,W] 00000000 0---0000 00000000 00000000			
0x0074	DMACB6[B,H,W] --000000 00000000 00000000 -------0			
0x0078	DMACSA6[B,H,W] 00000000 00000000 00000000 00000000			
0x007C	DMACDA6[B,H,W] 00000000 00000000 00000000 00000000			
0x0080	DMACA7[B,H,W] 00000000 0---0000 00000000 00000000			
0x0084	DMACB7[B,H,W] --000000 00000000 00000000 -------0			
0x0088	DMACSA7[B,H,W] 00000000 00000000 00000000 00000000			
0x008C	DMACDA7[B,H,W] 00000000 00000000 00000000 00000000			
0x0090 - 0x00FC	-	-	-	-

1.38 DSTC

DSTC Base_Address : 0x4006_1000

Base_Address + Address	Register			
	+3	+2	+1	+0
0x0000	DESTP[B,H,W] 00000000 00000000 00000000 00000000			
0x0004	HWDESP[B,H,W] 00XXXXXX XXXXXX00 00000000 00000000			
0x0008	SWTR[H] 00000000 00000000		CFG[B] 01000000	CMD[B] 00000001
0x000C	MONERS[B,H,W] 00XXXXXX XXXXXX00 XXXXXXXX XXX00000			
0x0010	DREQENB[31:0] [B,H,W] 00000000 00000000 00000000 00000000			
0x0014	DREQENB[63:32] [B,H,W] 00000000 00000000 00000000 00000000			
0x0018	DREQENB[95:64] [B,H,W] 00000000 00000000 00000000 00000000			
0x001C	DREQENB[127:96] [B,H,W] 00000000 00000000 00000000 00000000			
0x0020	DREQENB[159:128] [B,H,W] 00000000 00000000 00000000 00000000			
0x0024	DREQENB[191:160] [B,H,W] 00000000 00000000 00000000 00000000			
0x0028	DREQENB[223:192] [B,H,W] 00000000 00000000 00000000 00000000			
0x002C	DREQENB[255:224] [B,H,W] 00000000 00000000 00000000 00000000			
0x0030	HWINT[31:0] [B,H,W] 00000000 00000000 00000000 00000000			
0x0034	HWINT[63:32] [B,H,W] 00000000 00000000 00000000 00000000			
0x0038	HWINT[95:64] [B,H,W] 00000000 00000000 00000000 00000000			
0x003C	HWINT[127:96] [B,H,W] 00000000 00000000 00000000 00000000			
0x0040	HWINT[159:128] [B,H,W] 00000000 00000000 00000000 00000000			
0x0044	HWINT[191:160] [B,H,W] 00000000 00000000 00000000 00000000			
0x0048	HWINT[223:192] [B,H,W] 00000000 00000000 00000000 00000000			
0x004C	HWINT[255:224] [B,H,W] 00000000 00000000 00000000 00000000			
0x0050	HWINTCLR[31:0] [B,H,W] 00000000 00000000 00000000 00000000			
0x0054	HWINTCLR[63:32] [B,H,W] 00000000 00000000 00000000 00000000			

Base_Address + Address	Register			
	+3	+2	+1	+0
0x0058	HWINTCLR[95:64] [B,H,W] 00000000 00000000 00000000 00000000			
0x005C	HWINTCLR[127:96] [B,H,W] 00000000 00000000 00000000 00000000			
0x060	HWINTCLR[159:128] [B,H,W] 00000000 00000000 00000000 00000000			
0x064	HWINTCLR[191:160] [B,H,W] 00000000 00000000 00000000 00000000			
0x068	HWINTCLR[223:192] [B,H,W] 00000000 00000000 00000000 00000000			
0x06C	HWINTCLR[255:224] [B,H,W] 00000000 00000000 00000000 00000000			
0x070	DQMSK[31:0] [B,H,W] 00000000 00000000 00000000 00000000			
0x074	DQMSK[63:32] [B,H,W] 00000000 00000000 00000000 00000000			
0x078	DQMSK[95:64] [B,H,W] 00000000 00000000 00000000 00000000			
0x07C	DQMSK[127:96] [B,H,W] 00000000 00000000 00000000 00000000			
0x080	DQMSK[159:128] [B,H,W] 00000000 00000000 00000000 00000000			
0x084	DQMSK[191:160] [B,H,W] 00000000 00000000 00000000 00000000			
0x088	DQMSK[223:192] [B,H,W] 00000000 00000000 00000000 00000000			
0x08C	DQMSK[255:224] [B,H,W] 00000000 00000000 00000000 00000000			
0x090	DQMSKCLR[31:0] [B,H,W] 00000000 00000000 00000000 00000000			
0x094	DQMSKCLR[63:32] [B,H,W] 00000000 00000000 00000000 00000000			
0x098	DQMSKCLR[95:64] [B,H,W] 00000000 00000000 00000000 00000000			
0x09C	DQMSKCLR[127:96] [B,H,W] 00000000 00000000 00000000 00000000			
0x0A0	DQMSKCLR[159:128] [B,H,W] 00000000 00000000 00000000 00000000			
0x0A4	DQMSKCLR[191:160] [B,H,W] 00000000 00000000 00000000 00000000			
0x0A8	DQMSKCLR[223:192] [B,H,W] 00000000 00000000 00000000 00000000			
0x0AC	DQMSKCLR[255:224] [B,H,W] 00000000 00000000 00000000 00000000			
0x00B0 - 0x0FFC	-	-	-	-

1.39 CAN

CAN ch.0 Base_Address : 0x4006_2000

CAN ch.1 Base_Address : 0x4006_3000

Base_Address + Address	Register			
	+3	+2	+1	+0
0x0000	STATR[B,H,W] -------- 00000000		CTRLR[B,H,W] -------- 000-0001	
0x0004	BTR[B,H,W] -0100011 00000001		ERRCNT[B,H,W] 00000000 00000000	
0x0008	TESTR[B,H,W] -------- X00000--		INTR[B,H,W] 00000000 00000000	
0x000C	-	-	BRPER[B,H,W] -------- ----0000	
0x0010	IF1CMSK[B,H,W] -------- 00000000		IF1CREQ[B,H,W] 0------- 00000001	
0x0014	IF1MSK2[B,H,W] 11-11111 11111111		IF1MSK1[B,H,W] 11111111 11111111	
0x0018	IF1ARB2[B,H,W] 00000000 00000000		IF1ARB1[B,H,W] 00000000 00000000	
0x001C	-	-	IF1MCTR[B,H,W] 00000000 0---0000	
0x0020	IF1DTA2[B,H,W] 00000000 00000000		IF1DTA1[B,H,W] 00000000 00000000	
0x0024	IF1DTB2[B,H,W] 00000000 00000000		IF1DTB1[B,H,W] 00000000 00000000	
0x0028 - 0x002F	-	-	-	-
0x0030	IF1DTA1[B,H,W] 00000000 00000000		IF1DTA2[B,H,W] 00000000 00000000	
0x0034	IF1DTB1[B,H,W] 00000000 00000000		IF1DTB2[B,H,W] 00000000 00000000	
0x0038 - 0x003C	-	-	-	-
0x0040	IF2CMSK[B,H,W] -------- 00000000		IF2CREQ[B,H,W] 0------- 00000001	
0x0044	IF2MSK2[B,H,W] 11-11111 11111111		IF2MSK1[B,H,W] 11111111 11111111	
0x0048	IF2ARB2[B,H,W] 00000000 00000000		IF2ARB1[B,H,W] 00000000 00000000	
0x004C	-	-	IF2MCTR[B,H,W] 00000000 0---0000	
0x0050	IF2DTA2[B,H,W] 00000000 00000000		IF2DTA1[B,H,W] 00000000 00000000	
0x0054	IF2DTB2[B,H,W] 00000000 00000000		IF2DTB1[B,H,W] 00000000 00000000	
0x0058 - 0x005C	-	-	-	-

Base_Address + Address	Register			
	+3	+2	+1	+0
0x0060	IF2DTA1[B,H,W] 00000000 00000000		IF2DTA2[B,H,W] 00000000 00000000	
0x0064	IF2DTB1[B,H,W] 00000000 00000000		IF2DTB2[B,H,W] 00000000 00000000	
0x0068 - 0x007C	-	-	-	-
0x0080	TREQR2[B,H,W] 00000000 00000000		TREQR1[B,H,W] 00000000 00000000	
0x0084 - 0x008F	-	-	-	-
0x0090	NEWDT2[B,H,W] 00000000 00000000		NEWDT1[B,H,W] 00000000 00000000	
0x0094 - 0x009F	-	-	-	-
0x00A0	INTPND2[B,H,W] 00000000 00000000		INTPND1[B,H,W] 00000000 00000000	
0x00A4 - 0x00AF	-	-	-	-
0x00B0	MSGVAL2[B,H,W] 00000000 00000000		MSGVAL1[B,H,W] 00000000 00000000	
0x00B4 - 0x0FFC	-	-	-	-

1.40 Ethernet-MAC

Ethernet-MAC Base_Address : 0x4006_4000

Base_Address + Address	Register			
	+3	+2	+1	+0
0x0000 – 0x1FFC	XXXXXXXX	XXXXXXXX	XXXXXXXX	XXXXXXXX

Note:

- *For the register details of Ethernet-MAC block, refer to the "Ethernet part".*

1.41 Ethernet-Control

Ethernet-Control Base_Address : 0x4006_6000

Base_Address + Address	Register			
	+3	+2	+1	+0
0x000 - 0xFFC	XXXXXXXX	XXXXXXXX	XXXXXXXX	XXXXXXXX

Note:

- *For the register details of Ethernet-Control block, refer to the Ethernet part.*

1.42 I2S

I2S ch.0 Base_Address : 0x4006_C000

I2S ch.1 Base_Address : 0x4006_C800

Base_Address + Address	Register			
	+3	+2	+1	+0
0x000	RXFDAT[B,H,W] 00000000 00000000 00000000 00000000			
0x004	TXFDAT[B,H,W] 00000000 00000000 00000000 00000000			
0x008	CNTREG[B,H,W] 00000000 00000000 00000000 00000000			
0x00C	MCR0REG[B,H,W] -0000000 00000000 -0000000 00000000			
0x010	MCR1REG[B,H,W] 00000000 00000000 00000000 00000000			
0x014	MCR2REG[B,H,W] 00000000 00000000 00000000 00000000			
0x018	OPRREG[B,H,W] -------0 -------0 -------- -------0			
0x01C	SRST[B,H,W] -------- -------- -------- -------0			
0x020	INTCNT[B,H,W] -1111111 --111111 ----0000 --000000			
0x024	STATUS[B,H,W] 00000000 ----0000 00000000 00000000			
0x028	DMAACT[B,H,W] -------0 -------0 -------0 -------0			
0x02C	TSTREG[B,H,W] -------- -------- -------- -------0			
0x030 - 0xFFC	-	-	-	-

1.43 SD-Card

SD-Card Base_Address : 0x4006_E000

Base_Address + Address	Register			
	+3	+2	+1	+0
0x000 – 0xFFC	XXXXXXXX	XXXXXXXX	XXXXXXXX	XXXXXXXX

Note:

- *For the register details of SD-Card block, refer to the Chapter SD Card Interface.*

1.44 CAN FD

CAN FD Base_Address : 0x4007_0000

Base_Address + Address	Register			
	+3	+2	+1	+0
0x000	CREL[B,H,W] 00110000 00010011 00000101 0000110			
0x004	ENDN[B,H,W] 10000111 01100101 01000011 00100001			
0x008	-	-	-	-
0x00C	FBTP[B,H,W] ---00000 0--00000 ----1010 -011--11			
0x010	TEST[B,H,W] -------- -------- --000000 X000----			
0x014	RWD[B,H,W] -------- -------- 00000000 00000000			
0x018	CCCR[B,H,W] -------- -------- -0000000 00000001			
0x01C	BTP[B,H,W] ------00 00000000 --001010 00110011			
0x020	TSCC[B,H,W] -------- ----0000 -------- ------00			
0x024	TSCV[B,H,W] -------- -------- 00000000 00000000			
0x028	TOCC[B,H,W] 11111111 11111111 -------- -----000			
0x02C	TOCV[B,H,W] -------- -------- 11111111 11111111			
0x030 - 0x03C	-	-	-	-
0x040	ECR[B,H,W] -------- 00000000 00000000 00000000			
0x044	PSR[B,H,W] -------- -------- --000111 00000111			
0x048 - 0x04C	-	-	-	-
0x050	IR[B,H,W] 00000000 00000000 00000000 00000000			
0x054	IE[B,H,W] 00000000 00000000 00000000 00000000			
0x058	ILS[B,H,W] 00000000 00000000 00000000 00000000			
0x05C	ILE[B,H,W] -------- -------- -------- ------00			
0x060 - 0x07C	-	-	-	-

Base_Address + Address	Register			
	+3	+2	+1	+0
0x080	GFC[B,H,W] -------- -------- -------- --000000			
0x084	SIDFC[B,H,W] -------- 00000000 00000000 000000--			
0x088	XIDFC[B,H,W] -------- -0000000 00000000 000000--			
0x08C	-	-	-	-
0x090	XIDAM[B,H,W] ---11111 11111111 11111111 11111111			
0x094	HPMS[B,H,W] -------- -------- 00000000 00000000			
0x098	NDAT1[B,H,W] 00000000 00000000 00000000 00000000			
0x09C	NDAT2[B,H,W] 00000000 00000000 00000000 00000000			
0x0A0	RXF0C[B,H,W] 00000000 -0000000 00000000 000000--			
0x0A4	RXF0S[B,H,W] ------00 --000000 --000000 -0000000			
0x0A8	RXF0A[B,H,W] -------- -------- -------- --000000			
0x0AC	RXBC[B,H,W] -------- -------- 00000000 000000--			
0x0B0	RXF1C[B,H,W] 00000000 -0000000 00000000 000000--			
0x0B4	RXF1S[B,H,W] 00----00 --000000 --000000 -0000000			
0x0B8	RXF1A[B,H,W] -------- -------- -------- --000000			
0x0BC	RXESC[B,H,W] -------- -------- -----000 -000-000			
0x0C0	TXBC[B,H,W] -0000000 --000000 00000000 000000--			
0x0C4	TXFQS[B,H,W] -------- --000000 ---00000 –000000			
0x0C8	TXESC[B,H,W] -------- -------- -------- -----000			
0x0CC	TXBRP[B,H,W] 00000000 00000000 00000000 00000000			
0x0D0	TXBAR[B,H,W] 00000000 00000000 00000000 00000000			
0x0D4	TXBCR[B,H,W] 00000000 00000000 00000000 00000000			
0x0D8	TXBTO[B,H,W] 00000000 00000000 00000000 00000000			
0x0DC	TXBCF[B,H,W] 00000000 00000000 00000000 00000000			

Base_Address + Address	Register			
	+3	+2	+1	+0
0x0E0	TXBTIE[B,H,W] 00000000 00000000 00000000 00000000			
0x0E4	TXBCIE[B,H,W] 00000000 00000000 00000000 00000000			
0x0E8 - 0x0EC	-	-	-	-
0x0F0	TXEFC[B,H,W] --000000 --000000 00000000 000000--			
0x0F4	TXEFS[B,H,W] ------00 ---00000 ---00000 --000000			
0x0F8	TXEFA[B,H,W] -------- -------- -------- ---00000			
0x0FC - 0x1FC	-	-	-	-
0x200	FDSEAR[B,H,W] 00000000 00000000		FDESR[B,H,W] ------00	FDECR[B,H,W] ----0000
0x204	FDDEAR[B,H,W] 00000000 00000000		FDESCR[B,H,W] ------00	-
0x208	FDFECR[B,H,W] 0------- -----000 00000000 00000000			
0x20C	-	-	-	-
0x210	TSMDR[B,H,W] -------- -------0		TSCNTR[B,H,W] -------- -------0	
0x214	TSDIVR[B,H,W] -------- -------- 00000000 00000000			
0x218	TSCPCLR[B,H,W] 00000000 00000000		TSCDTR[B,H,W] 00000000 00000000	
0x21C - 0xFFC	-	-	-	-

CAN FD Message RAM

Base_Address + Address	Message RAM			
	+3	+2	+1	+0
0x8000 - 0xBFFC	Rx Buffer and FIFO Element [W] Tx Buffer Element [W] Tx Event FIFO Element [W] Standard Message ID Filter Element [W] Extended Message ID Filter Element [W]			

Note:

- *For the register details of CAN FD Message RAM block, refer to the Chapter CAN FD Controller.*

1.45 Programmable-CRC

Programmable-CRC Base_Address : 0x4008_0000

Base_Address + Address	Register			
	+3	+2	+1	+0
0x000	CRCn_PORY[B,H,W] 00000100 11000001 00011101 10110111			
0x004	CRCn_SEED[B,H,W] 11111111 11111111 11111111 11111111			
0x008	CRCn_FXOR[B,H,W] 11111111 11111111 11111111 11111111			
0x00C	CRCn_CFG[B,H,W] 00000000 11100000 00000000 00000000			
0x010	CRCn_WR[B,H,W] 00000000 00000000 00000000 00000000			
0x014	CRCn_RD[B,H,W] 00000000 00000000 00000000 00000000			
0x018 - 0xFFC	-	-	-	-

1.46 WorkFlash_IF

WorkFlash_IF Base_Address : 0x200E_0000

Base_Address + Address	Register			
	+3	+2	+1	+0
0x000	WFASZR[B,H,W]			
0x004	WFRWTR[B,H,W]			
0x008	WFSTR[B,H,W]			
0x00C - 0xFFF	-	-	-	-

Note:

- *For the register details of Workflash IF block, refer to the Flash Programming Manual of the product used.*

1.47 High-Speed Quad SPI Controller

1.47.1 TYPE1-M4, TYPE2-M4, TYPE3-M4 Products

High-Speed Quad SPI Controller Base_Address : 0xD000_0000

Base_Address + Address	Register			
	+3	+2	+1	+0
0x000	HSSPIn_MCTRL[B,H,W] -------- -------- -------- --000-00			
0x004	HSSPIn_PCC0[B,H,W] -------- -1111111 00000000 00000000			
0x008	HSSPIn_PCC1[B,H,W] -------- -1111111 00000000 00000000			
0x00C	HSSPIn_PCC2[B,H,W] -------- -1111111 00000000 00000000			
0x010	HSSPIn_PCC3[B,H,W] -------- -1111111 00000000 00000000			
0x014	HSSPIn_TXF[B,H,W] -------- -------- -------- -0000000			
0x018	HSSPIn_TXE[B,H,W] -------- -------- -------- -0000000			
0x01C	HSSPIn_TXC[B,H,W] -------- -------- -------- -0000000			
0x020	HSSPIn_RXF[B,H,W] -------- -------- -------- -0000000			
0x024	HSSPIn_RXE[B,H,W] -------- -------- -------- -0000000			
0x028	HSSPIn_RXC[B,H,W] -------- -------- -------- -0000000			
0x02C	HSSPIn_FAULTF[B,H,W] -------- -------- -------- ---00000			
0x030	HSSPIn_FAULTC[B,H,W] -------- -------- -------- ---00000			
0x034	-	-	HSSPIn_DMDMAEN [B,H,W] ------00	HSSPIn_DMCFG [B,H,W] -----001
0x038	HSSPIn_DMTRP [B,H,W] ----0000	HSSPIn_DMPSEL [B,H,W] ------00	HSSPIn_DMSTOP [B,H,W] -------0	HSSPIn_DMSTART [B,H,W] -------0
0x03C	HSSPIn_DMBCS[B,H,W] 00000000 00000000		HSSPIn_DMBCC[B,H,W] 00000000 00000000	
0x040	HSSPIn_DMSTATUS[B,H,W] -------- ---00000 ---00000 ------00			
0x044	-	-	-	-
0x048	-	-	-	-
0x04C	HSSPIn_FIFOCFG[B,H,W] --------_--------_---00000_01110111			

Base_Address + Address	Register			
	+3	+2	+1	+0
0x050	HSSPIn_TXFIFO0[B,H,W] 00000000 00000000 00000000 00000000			
0x054	HSSPIn_TXFIFO1[B,H,W] 00000000 00000000 00000000 00000000			
0x058	HSSPIn_TXFIFO2[B,H,W] 00000000 00000000 00000000 00000000			
0x05C	HSSPIn_TXFIFO3[B,H,W] 00000000 00000000 00000000 00000000			
0x060	HSSPIn_TXFIFO4[B,H,W] 00000000 00000000 00000000 00000000			
0x064	HSSPIn_TXFIFO5[B,H,W] 00000000 00000000 00000000 00000000			
0x068	HSSPIn_TXFIFO6[B,H,W] 00000000 00000000 00000000 00000000			
0x06C	HSSPIn_TXFIFO7[B,H,W] 00000000 00000000 00000000 00000000			
0x070	HSSPIn_TXFIFO8[B,H,W] 00000000 00000000 00000000 00000000			
0x074	HSSPIn_TXFIFO9[B,H,W] 00000000 00000000 00000000 00000000			
0x078	HSSPIn_TXFIFO10[B,H,W] 00000000 00000000 00000000 00000000			
0x07C	HSSPIn_TXFIFO11[B,H,W] 00000000 00000000 00000000 00000000			
0x080	HSSPIn_TXFIFO12[B,H,W] 00000000 00000000 00000000 00000000			
0x084	HSSPIn_TXFIFO13[B,H,W] 00000000 00000000 00000000 00000000			
0x088	HSSPIn_TXFIFO14[B,H,W] 00000000 00000000 00000000 00000000			
0x08C	HSSPIn_TXFIFO15[B,H,W] 00000000 00000000 00000000 00000000			
0x090	HSSPIn_RXFIFO0[B,H,W] 00000000 00000000 00000000 00000000			
0x094	HSSPIn_RXFIFO1[B,H,W] 00000000 00000000 00000000 00000000			
0x098	HSSPIn_RXFIFO2[B,H,W] 00000000 00000000 00000000 00000000			
0x09C	HSSPIn_RXFIFO3[B,H,W] 00000000 00000000 00000000 00000000			
0x0A0	HSSPIn_RXFIFO4[B,H,W] 00000000 00000000 00000000 00000000			
0x0A4	HSSPIn_RXFIFO5[B,H,W] 00000000 00000000 00000000 00000000			
0x0A8	HSSPIn_RXFIFO6[B,H,W] 00000000 00000000 00000000 00000000			
0x0AC	HSSPIn_RXFIFO7[B,H,W] 00000000 00000000 00000000 00000000			

Base_Address + Address	Register			
	+3	+2	+1	+0
0x0B0	HSSPIn_RXFIFO8[B,H,W] 00000000 00000000 00000000 00000000			
0x0B4	HSSPIn_RXFIFO9[B,H,W] 00000000 00000000 00000000 00000000			
0x0B8	HSSPIn_RXFIFO10[B,H,W] 00000000 00000000 00000000 00000000			
0x0BC	HSSPIn_RXFIFO11[B,H,W] 00000000 00000000 00000000 00000000			
0x0C0	HSSPIn_RXFIFO12[B,H,W] 00000000 00000000 00000000 00000000			
0x0C4	HSSPIn_RXFIFO13[B,H,W] 00000000 00000000 00000000 00000000			
0x0C8	HSSPIn_RXFIFO14[B,H,W] 00000000 00000000 00000000 00000000			
0x0CC	HSSPIn_RXFIFO15[B,H,W] 00000000 00000000 00000000 00000000			
0x0D0	HSSPIn_CSCFG[B,H,W] -------- ----0000 ----0000 --000000			
0x0D4	HSSPIn_CSITIME[B,H,W] -------- -------- 11111111 11111111			
0x0D8	HSSPIn_CSAEXT[B,H,W] 00000000 00000000 000----- --------			
0x0DC	HSSPIn_RDCSDC1[B,H,W] 00000000 ----0000		HSSPIn_RDCSDC0[B,H,W] 00000000 ----0000	
0x0E0	HSSPIn_RDCSDC3[B,H,W] 00000000 ----0000		HSSPIn_RDCSDC2[B,H,W] 00000000 ----0000	
0x0E4	HSSPIn_RDCSDC5[B,H,W] 00000000 ----0000		HSSPIn_RDCSDC4[B,H,W] 00000000 ----0000	
0x0E8	HSSPIn_RDCSDC7[B,H,W] 00000000 ----0000		HSSPIn_RDCSDC6[B,H,W] 00000000 ----0000	
0x0EC	HSSPIn_WRCSDC1[B,H,W] 00000000 ----0000		HSSPIn_WRCSDC0[B,H,W] 00000000 ----0000	
0x0F0	HSSPIn_WRCSDC3[B,H,W] 00000000 ----0000		HSSPIn_WRCSDC2[B,H,W] 00000000 ----0000	
0x0F4	HSSPIn_WRCSDC5[B,H,W] 00000000 ----0000		HSSPIn_WRCSDC4[B,H,W] 00000000 ----0000	
0x0F8	HSSPIn_WRCSDC7[B,H,W] 00000000 ----0000		HSSPIn_WRCSDC6[B,H,W] 00000000 ----0000	
0x0FC	HSSPIn_MID[B,H,W] 00000000 00000000 00000110 00110000			
0x100 - 0x3FC	-	-	-	-
0x400	-	-	-	QDCLKR[B,H,W] ----1111
0x404	-	-	-	DBCNT[B,H,W] ------00
0x408 - 0xFFC	-	-	-	-

1.47.2 TYPE4-M4 Product

High-Speed Quad SPI Controller Base_Address : 0xD0A0_4000

Base_Address + Address	Register			
	+3	+2	+1	+0
0x000	HSSPIn_MCTRL[B,H,W] -------- -------- -------- --000-00			
0x004	HSSPIn_PCC0[B,H,W] -------- -1111111 00000000 00000000			
0x008	HSSPIn_PCC1[B,H,W] -------- -1111111 00000000 00000000			
0x00C	HSSPIn_PCC2[B,H,W] -------- -1111111 00000000 00000000			
0x010	HSSPIn_PCC3[B,H,W] -------- -1111111 00000000 00000000			
0x014	HSSPIn_TXF[B,H,W] -------- -------- -------- -0000000			
0x018	HSSPIn_TXE[B,H,W] -------- -------- -------- -0000000			
0x01C	HSSPIn_TXC[B,H,W] -------- -------- -------- -0000000			
0x020	HSSPIn_RXF[B,H,W] -------- -------- -------- -0000000			
0x024	HSSPIn_RXE[B,H,W] -------- -------- -------- -0000000			
0x028	HSSPIn_RXC[B,H,W] -------- -------- -------- -0000000			
0x02C	HSSPIn_FAULTF[B,H,W] -------- -------- -------- ---00000			
0x030	HSSPIn_FAULTC[B,H,W] -------- -------- -------- ---00000			
0x034	-	-	HSSPIn_DMDMAEN [B,H,W] ------00	HSSPIn_DMCFG [B,H,W] -----001
0x038	HSSPIn_DMTRP [B,H,W] ----0000	HSSPIn_DMPSEL [B,H,W] ------00	HSSPIn_DMSTOP [B,H,W] -------0	HSSPIn_DMSTART [B,H,W] -------0
0x03C	HSSPIn_DMBCS[B,H,W] 00000000 00000000		HSSPIn_DMBCC[B,H,W] 00000000 00000000	
0x040	HSSPIn_DMSTATUS[B,H,W] -------- ---00000 ---00000 ------00			
0x044	-	-	-	-
0x048	-	-	-	-
0x04C	HSSPIn_FIFOCFG[B,H,W] --------_--------_---00000_01110111			

Base_Address + Address	Register			
	+3	+2	+1	+0
0x050	HSSPIn_TXFIFO0[B,H,W] 00000000 00000000 00000000 00000000			
0x054	HSSPIn_TXFIFO1[B,H,W] 00000000 00000000 00000000 00000000			
0x058	HSSPIn_TXFIFO2[B,H,W] 00000000 00000000 00000000 00000000			
0x05C	HSSPIn_TXFIFO3[B,H,W] 00000000 00000000 00000000 00000000			
0x060	HSSPIn_TXFIFO4[B,H,W] 00000000 00000000 00000000 00000000			
0x064	HSSPIn_TXFIFO5[B,H,W] 00000000 00000000 00000000 00000000			
0x068	HSSPIn_TXFIFO6[B,H,W] 00000000 00000000 00000000 00000000			
0x06C	HSSPIn_TXFIFO7[B,H,W] 00000000 00000000 00000000 00000000			
0x070	HSSPIn_TXFIFO8[B,H,W] 00000000 00000000 00000000 00000000			
0x074	HSSPIn_TXFIFO9[B,H,W] 00000000 00000000 00000000 00000000			
0x078	HSSPIn_TXFIFO10[B,H,W] 00000000 00000000 00000000 00000000			
0x07C	HSSPIn_TXFIFO11[B,H,W] 00000000 00000000 00000000 00000000			
0x080	HSSPIn_TXFIFO12[B,H,W] 00000000 00000000 00000000 00000000			
0x084	HSSPIn_TXFIFO13[B,H,W] 00000000 00000000 00000000 00000000			
0x088	HSSPIn_TXFIFO14[B,H,W] 00000000 00000000 00000000 00000000			
0x08C	HSSPIn_TXFIFO15[B,H,W] 00000000 00000000 00000000 00000000			
0x090	HSSPIn_RXFIFO0[B,H,W] 00000000 00000000 00000000 00000000			
0x094	HSSPIn_RXFIFO1[B,H,W] 00000000 00000000 00000000 00000000			
0x098	HSSPIn_RXFIFO2[B,H,W] 00000000 00000000 00000000 00000000			
0x09C	HSSPIn_RXFIFO3[B,H,W] 00000000 00000000 00000000 00000000			
0x0A0	HSSPIn_RXFIFO4[B,H,W] 00000000 00000000 00000000 00000000			
0x0A4	HSSPIn_RXFIFO5[B,H,W] 00000000 00000000 00000000 00000000			
0x0A8	HSSPIn_RXFIFO6[B,H,W] 00000000 00000000 00000000 00000000			
0x0AC	HSSPIn_RXFIFO7[B,H,W] 00000000 00000000 00000000 00000000			

Base_Address + Address	Register			
	+3	+2	+1	+0
0x0B0	HSSPIn_RXFIFO8[B,H,W] 00000000 00000000 00000000 00000000			
0x0B4	HSSPIn_RXFIFO9[B,H,W] 00000000 00000000 00000000 00000000			
0x0B8	HSSPIn_RXFIFO10[B,H,W] 00000000 00000000 00000000 00000000			
0x0BC	HSSPIn_RXFIFO11[B,H,W] 00000000 00000000 00000000 00000000			
0x0C0	HSSPIn_RXFIFO12[B,H,W] 00000000 00000000 00000000 00000000			
0x0C4	HSSPIn_RXFIFO13[B,H,W] 00000000 00000000 00000000 00000000			
0x0C8	HSSPIn_RXFIFO14[B,H,W] 00000000 00000000 00000000 00000000			
0x0CC	HSSPIn_RXFIFO15[B,H,W] 00000000 00000000 00000000 00000000			
0x0D0	HSSPIn_CSCFG[B,H,W] -------- ----0000 ----0000 --000000			
0x0D4	HSSPIn_CSITIME[B,H,W] -------- -------- 11111111 11111111			
0x0D8	HSSPIn_CSAEXT[B,H,W] 00000000 00000000 000----- --------			
0x0DC	HSSPIn_RDCSDC1[B,H,W] 00000000 ----0000		HSSPIn_RDCSDC0[B,H,W] 00000000 ----0000	
0x0E0	HSSPIn_RDCSDC3[B,H,W] 00000000 ----0000		HSSPIn_RDCSDC2[B,H,W] 00000000 ----0000	
0x0E4	HSSPIn_RDCSDC5[B,H,W] 00000000 ----0000		HSSPIn_RDCSDC4[B,H,W] 00000000 ----0000	
0x0E8	HSSPIn_RDCSDC7[B,H,W] 00000000 ----0000		HSSPIn_RDCSDC6[B,H,W] 00000000 ----0000	
0x0EC	HSSPIn_WRCSDC1[B,H,W] 00000000 ----0000		HSSPIn_WRCSDC0[B,H,W] 00000000 ----0000	
0x0F0	HSSPIn_WRCSDC3[B,H,W] 00000000 ----0000		HSSPIn_WRCSDC2[B,H,W] 00000000 ----0000	
0x0F4	HSSPIn_WRCSDC5[B,H,W] 00000000 ----0000		HSSPIn_WRCSDC4[B,H,W] 00000000 ----0000	
0x0F8	HSSPIn_WRCSDC7[B,H,W] 00000000 ----0000		HSSPIn_WRCSDC6[B,H,W] 00000000 ----0000	
0x0FC	HSSPIn_MID[B,H,W] 00000000 00000000 00000110 00110000			
0x100 - 0x3FC	-	-	-	-
0x400	-	-	-	QDCLKR[B,H,W] ----1111
0x404	-	-	-	DBCNT[B,H,W] ------00
0x408 - 0xFFC	-	-	-	-

1.48 HyperBus Interface

HyperBus Interface Base_Address : 0xD0A0_5000

Base_Address + Address	Register			
	+3	+2	+1	+0
0x000	CSR[B,H,W] -----000 -------0 ----0000 -------0			
0x004	IEN[B,H,W] 0------- -------- -------- -------0			
0x008	ISR[B,H,W] -------- -------- -------- -------0			
0x024	-	-	-	-
0x010	MBR0[B,H,W] 00000000 00000000 00000000 00000000			
0x014	MBR1[B,H,W] 00000000 00000000 00000000 00000000			
0x018	MCR0[B,H,W] -------- ------00 -------- --00--11			
0x01C	MCR1[B,H,W] -------- ------00 -------- --00--11			
0x020	MTR0[B,H,W] 00000000 00000000 00000000 ----0000			
0x024	MTR1[B,H,W] 00000000 00000000 00000000 ----0000			
0x028	GPOR[B,H,W] -------- -------- -------- ------00			
0x02C	WPR[B,H,W] -------- -------- -------- -------0			
0x030	TEST[B,H,W] -------- -------- -------- -------0			
0x034- 0xFFC	-	-	-	-

1.49 GDC Sub System Controller

GDC Sub System Controller **Base_Address : 0xD0A0_0000**

Base_Address + Address	Register			
	+3	+2	+1	+0
0x000	LockUnlock[W] 00000000 00000000 00000000 00000000			
0x004	LockStatus[W] -------- -------- -------0 ---0---0			
0x008	*[W]			
0x00C	CnfigClockControl[W] -------- -------- -------- -----001			
0x010	VramInterruptEnable[W] -------- -------- -------- ------11			
0x014	*[W]			
0x018	VramInterruptClear[W] -------- -------- -------- ------00			
0x01C	VramInterruptStatus[W] -------- -------- -------- ------00			
0x020	ExtFlashDevSelect[W] -------- -------- -------- -------1			
0x024	VramRemapDisable[W] -------- -------- -------- -------0			
0x028	PanicSwitch[W] -------- -------- -------- -------1			
0x02C	GDC_ClockDivider[W] -------- -----100 00000000 --------			
0x030	WkupTriggerMask[W] -----000 -----000 00000000 00000000			
0x034	ClockDomainStatus[W] -------- -------- -------- ----0000			
0x038	-			
0x03C	-			
0x040	dsp_LockUnlock[W] 00000000 00000000 00000000 00000000			
0x044	dsp_LockStatus[W] -------- -------- -------0 ---0---0			
0x048	dsp0_ClockDivider[W] -------- 01000001 11100000 --------			
0x04C	dsp0_DomainControl[W] -------- -------1 -------- -------0			
0x050	dsp0_ClockShift[W] -------- -------- -------- -------1			

Base_Address + Address	Register			
	+3	+2	+1	+0
0x054	*[W]			
0x058	dsp0_PowerEnControl[W] -------- -------- -------- -------0			
0x05C	dsp0_ClockGateModeLock[W] 00000000 00000000 00000000 00000000			
0x060	dsp0_ClockGateControl[W] -------- -------- -------- -------0			
0x064	-			
0x068	-			
0x06C	-			
0x070	-			
0x074	-			
0x078	SDRAMC_ClcokDivider[W] -------- 00000100 00000000 --------			
0x07C	SDRAMC_DomainControl[W] -------- -------1 -------- -------0			
0x080	HSSPIC_ClockDivider[W] -------- 00000100 00000000 --------			
0x084	HSSPIC_DomainControl[W] -------- -------1 -------- -------0			
0x088	RPCC_ClcokDivider[W] -------- -------- -------- -----000			
0x08C	RPCC_DomainControl[W] -------- -------1 -------- -------0			
0x090	-			
0x094	-			
0x098	-			
0x09C	-			
0x100	vram_LockUnlock[W] 00000000 00000000 00000000 00000000			
0x104	vram_LockStatus[W] -------- -------- -------0 ---0---0			
0x108	vram_sram_select[W] -------- -------- ----0000 00000000			
0x10C	*[W]			

Base_Address + Address	Register			
	+3	+2	+1	+0
0x110	*[W]			
0x114	*[W]			
0x118	*[W]			
0x11C	*[W]			
0x120	*[W]			
0x124	*[W]			
0x128	*[W]			
0x12C	-			
0x130	-			
0x134	-			
0x138	-			
0x13C	vram_sberraddr_s0[W] 00000000 00000000 0000000 00000000			
0x140	vram_sberraddr_s1[W] 00000000 00000000 0000000 00000000			
0x144	-			
0x148	vram_arbiter_priority[W] -------- -------- -------- 00000000			
0x14C-0xFFC	-			

1.50 GDC Sub System SDRAM Controller

GDC Sub System SDRAM Controller **Base_Address : 0xD0A0_3000**

Base_Address + Address	Register			
	+3	+2	+1	+0
0x000-0x0FF	-			
0x100	SDMODE[W] -------- -------0 00010011 --00-000			
0x104	REFTIM[W] -------0 00000000 0000000000110011			
0x108	PWRDWN[W] -------- -------- 00000000 00000000			
0x10C	SDTIM[W] 0-----00 01000010 00010001 0100--01			
0x110	SDCMD[W] 0------- ---00000 00000000 00000000			
0x114-0xFFC	-			

B. List of Notes

This section explains notes for each function.

1. Notes when High-speed CR is Used for the Master Clock

1. Notes when High-speed CR is Used for the Master Clock

This section explains notes when the high-speed CR is used for the master clock.
The frequency of the high-speed CR varies depending on the temperature and/or the power supply voltage.
The following table shows notes on each function macro when the high-speed CR is used for the master clock.
Furthermore, pay attention to notes when the high-speed CR is used as an input clock of the PLL and the master clock is selected for PLL.

■ Notes on Each Macro

Macro	Function/Mode	Notes
Internal Bus Clock	HCLK/FCLK/PCLK0/ PCLK1/PCLK2/ TPIUCLK	When the frequency of the high-speed CR is the maximum value, the setting of the internal operating clock frequency shall not exceed the upper limit specified in the "data sheet" for the product that you are using.
Timer	Multi-function Timer Base Timer Watch Timer Dual Timer Watch Dog Timer Quadrature	The frequency variation of the high-speed CR should be considered for the timer count value of each macro.
A/D Converter	Sampling Time Compare Time	Considering the frequency variation of the high-speed CR, the sampling time and the compare time of the A/D converter shall satisfy the specification specified in the "data sheet" for the product that you are using.
USB	-	As the frequency accuracy does not meet the required specification, these macros cannot be used when the high-speed CR is used for the master clock.
Ethernet-MAC		
CAN		
CAN-FD		
I^2S		
Multi-Function Serial Interface	UART	Even if the frequency of the high-speed CR is the minimum or the maximum value, the baud rate error should be considered. The baud rate error shall not exceed the limit.
	CSIO	The frequency variation of the high-speed CR should be considered for the communication of each macro.
	I2C	
	LIN	As the required frequency accuracy cannot be met, this function cannot be used as master. As a slave, the specified baud rate has more error at the maximum/minimum frequency of high-speed clock. So, if the error limit of the baud rate is exceeded, this function cannot be used.
Debug Interface	Serial Wire	As the frequency variation of the high-speed CR, the SWV(Serial Wire View) may not be used.
External Bus Interface	Clock Output	When the external bus clock output is used, the frequency variation of the high-speed CR should be considered for devices to be connected.
High-Speed Quad SPI	-	The frequency variation of the high-speed CR should be considered for devices to be connected.

Macro	Function/Mode	Notes
SD card Interface	-	The frequency variation of the high-speed CR should be considered for devices to be connected.
GDC	Panel Output High-Speed Quad SPI HyperBus Interface SDRAM Interface	The frequency variation of the high-speed CR should be considered for devices to be connected.

Major Changes

Spansion Publication Number: MN709-00003

Page	Section	Changes
Revision 1.0		
-	-	Initial release
Revision 2.0		
6 to 7	The target products in this manual	Added TYPE1-M4, TYPE2-M4, TYPE3-M4 product
18	12 -bit A/D Converter bit A/D Converter bit A/D Converter bit A/D Converter bit 1. Overview	Added "DMA transfer triggered by an interrupt request"
41	12 -bit A/D Converter bit A/D Converter bit A/D Converter bit A/D Converter bit 3.6 Starting DMA	Revised the description of the explanation
-	-	Company name and layout design change
Revision 3.0		
4	Peripheral Manual	Added "GDC Part"
8	The target products in this manual	Added TYPE4-M4
84	CHAPTER1-3:A/D Timer Trigger Selection	Added "The multiple A/D converters can use same start factor."
Revision 4.0		
6 to 10	The target products in this manual	Added TYPE5-M4 and TYPE6-M4 and the other target products.
8	The target products in this manual	Revised TYPE4-M4 Product list.
91 to 104	CHAPTER 1-4: A/D Converter Offset Calibration	Added a new chapter.
252	Appendixes A. Register Map 1. Register Map	Corrected Base Address of GDC Sub System SDRAM Controller

NOTE: Please see “Revision History” about later revised information.

Revision History

Document Revision History

Document Title:	32-Bit Microcontroller FM4 Family Peripheral Manual Analog Macro Part
Document Number:	002-04860

Revision	ECN No.	Origin of Change	Description of Change
**	-	YOHO	Migrated to Cypress and assigned document number 002-04860. No change to document contents or format.
*A	5277501	YOHO	Update to Cypress template. CHAPTER 1-2: 12-bit A/D Converter − Changed the continuous detection time "0 to 7" to "1 to7" in Range comparison function of 1. Overview. (Page 22) − Changed "Upper limit threshold setting register0(ADRCUT0)" to "Upper limit threshold setting register(WCMPDH)" in Figure 3-8 and 3-9 of 3.5 Range Comparison Function. (Page 42, 43) − Changed "Lower limit threshold setting register0(ADRCLT0)" to "Lower limit threshold setting register(WCMPDL)" in Figure 3-8 and 3-9 of 3.5 Range Comparison Function. (Page 42, 43) − Changed "ADRCCS[n].RCOTS1,RCOTS0="00B"" to "WCMPCR.RCOCD2~0="011"" in Figure 3-9 of 3.5 Range Comparison Function. (Page 43) − Changed "ADRCCS[n]" to "WCMPCR" in Figure 3-9 of 3.5 Range Comparison Function. (Page 43) − Changed "ADRCIF[n]" to "WCMRCIF" in Figure 3-9 of 3.5 Range Comparison Function. (Page 43) − Changed "ADRCOT.RCOOF[n]" to "WCMRCOT.RCOOF" in Figure 3-9 of 3.5 Range Comparison Function. (Page 43) − Changed "CYCLSL(*)" to "ENBLTIME" in Figure 4-1 of 4. Setup procedure Example. (Page 47) − Added Example of setting register in 4.5 Setting Conversion Time. (Page 52) − Changed INVL initial value "X" to "1" in 5.5 Scan Conversion FIFO Data Register(SCFD). (Page 61) − Changed INVL initial value "X" to "1" in 5.9 Priority Conversion FIFO Data Register(PCFD). (Page 67) − Changed ENABLETIME[15:8] to ENBLETIME[15:8] in 5.16 A/D Operaton Enable Setup Register(ADCEN). (Page 76) − Changed bit "[31:16]" to "[15:0]" in 5.19 Lower Limit Threshold Setup Register(WCMPDL). (Page 80) − Changed bit "[7:0]" to "[15:8]" in 5.20 Range Comparison Channel Select Register(WCMPSR). (Page 81) CHAPTER 1-4: A/D Converter Offset Calibration − Changed Figure 3-1 in 3.1.1 Setting the Value for Offset Calibration. (Page 94) − Changed the formula in 3.1.4 Calculation of Offset Calibration Value. (Page 98) − Changed OFST table in 5.1 Calibration Setting Register(CALSR). (Page 102) Appendixes - A. Register Map - 1. Rejister Map − Changed "Software-based Simulation Startup(Base Timer)" to "Software-based Simultaneous Startup(Base Timer)" in 1.11 IO Selector for Base Timer. (Page 139) − Changed SCFD bit12 initial values "X" to "1" in 1.14 A/DC. (Page 143)

Document Title:	32-Bit Microcontroller FM4 Family Peripheral Manual Analog Macro Part
Document Number:	002-04860

Revision	ECN No.	Origin of Change	Description of Change
			– Changed PCFD bit12 initial values "X" to "1" in 1.14 A/DC. (Page 143) – Changed LVD_STR2 initial values "0------" to "0-------" in 1.21 LDV. (Page 201) – Changed CLK_SEL bit1 initial values "-" to "0" in 1.27 Wacrh Counter. (Page 205) – Changed WTDIVEN initial values "-----00" to "------00" in 1.28.3 TYPE5-M4 of 1.28 RTC. (Page 213)
*B	5736989	AESATMP8	Updated logo and Copyright.
*C	6175054	KTOM	Added and changed to "Preface" – Added to the Note "Whether a peripheral function is on board or not is dependent on product type. See data sheets for details." (Page 3) – Added "Microcontroller Support Information:" (Page 3) – Changed "CHAPTER 1-2: 10-bit A/D Converter" to "12-bit" (Page 3) – Changed part numbers in Table 3, 5, 6 to 8 digits description. (Page 8) – Changed part numbers in Table 4 to 9 digits description. (Page 7) Added and changed to " CHAPTER 1-2:12-bit A/D Converter" – Changed the formula of "Sampling time" to "50 ns × 2 x {(9 + 1) × 4 + 3} = 4300 ns" (Page 74)