Please note that Cypress is an Infineon Technologies Company.
The document following this cover page is marked as “Cypress” document as this is the company that originally developed the product. Please note that Infineon will continue to offer the product to new and existing customers as part of the Infineon product portfolio.

Continuity of document content
The fact that Infineon offers the following product as part of the Infineon product portfolio does not lead to any changes to this document. Future revisions will occur when appropriate, and any changes will be set out on the document history page.

Continuity of ordering part numbers
Infineon continues to support existing part numbers. Please continue to use the ordering part numbers listed in the datasheet for ordering.

The following document contains information on Cypress products. The document has the series name, product name, and ordering part numbering with the prefix “MB”. However, Cypress will offer these products to new and existing customers with the series name, product name, and ordering part number with the prefix “CY”.

How to Check the Ordering Part Number

1. Go to www.cypress.com/pcn.
2. Enter the keyword (for example, ordering part number) in the **SEARCH PCNS** field and click **Apply**.
3. Click the corresponding title from the search results.
4. Download the Affected Parts List file, which has details of all changes

For More Information

Please contact your local sales office for additional information about Cypress products and solutions.

About Cypress

Cypress is the leader in advanced embedded system solutions for the world's most innovative automotive, industrial, smart home appliances, consumer electronics and medical products. Cypress' microcontrollers, analog ICs, wireless and USB-based connectivity solutions and reliable, high-performance memories help engineers design differentiated products and get them to market first. Cypress is committed to providing customers with the best support and development resources on the planet enabling them to disrupt markets by creating new product categories in record time. To learn more, go to www.cypress.com.



32-Bit Microcontroller FM3 Family Peripheral Manual

Doc. No. 002-05586 Rev. *C

Cypress Semiconductor
198 Champion Court
San Jose, CA 95134-1709
http://www.cypress.com

Copyrights

© Cypress Semiconductor Corporation, 2010-2017. This document is the property of Cypress Semiconductor Corporation and its subsidiaries, including Spansion LLC (“Cypress”). This document, including any software or firmware included or referenced in this document (“Software”), is owned by Cypress under the intellectual property laws and treaties of the United States and other countries worldwide. Cypress reserves all rights under such laws and treaties and does not, except as specifically stated in this paragraph, grant any license under its patents, copyrights, trademarks, or other intellectual property rights. If the Software is not accompanied by a license agreement and you do not otherwise have a written agreement with Cypress governing the use of the Software, then Cypress hereby grants you a personal, non-exclusive, nontransferable license (without the right to sublicense) (1) under its copyright rights in the Software (a) for Software provided in source code form, to modify and reproduce the Software solely for use with Cypress hardware products, only internally within your organization, and (b) to distribute the Software in binary code form externally to end users (either directly or indirectly through resellers and distributors), solely for use on Cypress hardware product units, and (2) under those claims of Cypress’s patents that are infringed by the Software (as provided by Cypress, unmodified) to make, use, distribute, and import the Software solely for use with Cypress hardware products. Any other use, reproduction, modification, translation, or compilation of the Software is prohibited.

TO THE EXTENT PERMITTED BY APPLICABLE LAW, CYPRESS MAKES NO WARRANTY OF ANY KIND, EXPRESS OR IMPLIED, WITH REGARD TO THIS DOCUMENT OR ANY SOFTWARE OR ACCOMPANYING HARDWARE, INCLUDING, BUT NOT LIMITED TO, THE IMPLIED WARRANTIES OF MERCHANTABILITY AND FITNESS FOR A PARTICULAR PURPOSE. To the extent permitted by applicable law, Cypress reserves the right to make changes to this document without further notice. Cypress does not assume any liability arising out of the application or use of any product or circuit described in this document. Any information provided in this document, including any sample design information or programming code, is provided only for reference purposes. It is the responsibility of the user of this document to properly design, program, and test the functionality and safety of any application made of this information and any resulting product. Cypress products are not designed, intended, or authorized for use as critical components in systems designed or intended for the operation of weapons, weapons systems, nuclear installations, life-support devices or systems, other medical devices or systems (including resuscitation equipment and surgical implants), pollution control or hazardous substances management, or other uses where the failure of the device or system could cause personal injury, death, or property damage (“Unintended Uses”). A critical component is any component of a device or system whose failure to perform can be reasonably expected to cause the failure of the device or system, or to affect its safety or effectiveness. Cypress is not liable, in whole or in part, and you shall and hereby do release Cypress from any claim, damage, or other liability arising from or related to all Unintended Uses of Cypress products. You shall indemnify and hold Cypress harmless from and against all claims, costs, damages, and other liabilities, including claims for personal injury or death, arising from or related to any Unintended Uses of Cypress products.

Cypress, the Cypress logo, Spansion, the Spansion logo, and combinations thereof, WICED, PSoC, CapSense, EZ-USB, F-RAM, and Traveo are trademarks or registered trademarks of Cypress in the United States and other countries. For a more complete list of Cypress trademarks, visit cypress.com. Other names and brands may be claimed as property of their respective owners.

Arm and Cortex are registered trademarks of Arm Limited (or its subsidiaries) in the US and/or elsewhere.

Preface

Thank you for your continued use of Cypress products.

Read this manual and Data Sheet thoroughly before using products in this family.

Purpose of This Manual and Intended Readers

This manual explains the functions and operations of this family and describes how it is used. The manual is intended for engineers engaged in the actual development of products using this family.

* This manual explains the configuration and operation of the peripheral functions, but does not cover the specifics of each device in the family.
  Users should refer to the respective data sheets of devices for device-specific details.
* Whether a peripheral function is on board or not is dependent on product type. See data sheets for details.

Trademark

Arm and Cortex are registered trademarks of Arm Limited (or its subsidiaries) in the US and/or elsewhere.

The company names and brand names herein are the trademarks or registered trademarks of their respective owners.

Sample Programs and Development Environment

Cypress offers sample programs free of charge for using the peripheral functions of the FM3 family. Cypress also makes available descriptions of the development environment required for this family. Feel free to use them to verify the operational specifications and usage of this Cypress microcontroller.

Microcontroller Support Information:

https://community.cypress.com/community/MCU

Note:

Note that the sample programs are subject to change without notice. Since they are offered as a way to demonstrate standard operations and usage, evaluate them sufficiently before running them on your system.
Cypress assumes no responsibility for any damage that may occur as a result of using a sample program.

Overall Organization of This Manual

Peripheral Manual has 15 chapters and Appendixes as shown below.

CHAPTER 1: System Overview
CHAPTER 2-1: Clock
CHAPTER 2-2: High-Speed CR Trimming
CHAPTER 2-3: Low-Speed CR Prescaler
CHAPTER 3: Clock supervisor
CHAPTER 4: Resets
CHAPTER 5-1: Low-voltage Detection Configuration
CHAPTER 5-2: Low-voltage Detection (A)
CHAPTER 5-3: Low-voltage Detection (B)
CHAPTER 5-4: Low-voltage Detection (C)
CHAPTER 6: Low Power Consumption Mode
CHAPTER 7-1: Configuration of interrupts
CHAPTER 7-2: Interrupts (A)
CHAPTER 7-3: Interrupts (B)
CHAPTER 7-4: Interrupts (C)
CHAPTER 8: External Interrupt and NMI Control Sections

CHAPTER 9: DMAC
CHAPTER 10: I/O Port
CHAPTER 11: CRC (Cyclic Redundancy Check)
CHAPTER 12: External Bus Interface
CHAPTER 13: Debug Interface
CHAPTER 14: Flash Memory
CHAPTER 15: Unique ID Register
Appendixes

Related Manuals

The manuals related to this family are listed below. See the manual appropriate to the applicable conditions.

The contents of these manuals are subject to change without notice. Contact us to check the latest versions available.

Peripheral Manual

FM3 Family Peripheral Manual (this manual)
  Called "Peripheral Manual" hereafter
FM3 Family Peripheral Manual Timer Part (002-04794)
  Called "Timer Part" hereafter
FM3 Family Peripheral Manual Analog Macro Part (002-04839)
  Called "Analog Macro Part" hereafter
FM3 Family Peripheral Manual Communication Macro Part (002-04843)
  Called "Communication Macro Part" hereafter
FM3 Family Peripheral Manual Ethernet Part (002-04782)
  Called "Ethernet Part" hereafter

Data Sheet

For details about device-specific, electrical characteristics, package dimensions, ordering information etc., see the following document.

32-bit Microcontroller FM3 Family Data Sheet

Note:

The data sheets for each series are provided.
See the appropriate data sheet for the series that you are using.

CPU Programming Manual

For details about Arm Cortex-M3 core, see the following documents that can be obtained from

http://www.arm.com/.

Cortex-M3 Technical Reference Manual
Arm v7-M Architecture Application Level Reference Manual

Flash Programming Manual

For details about the functions and operations of the built-in flash memory, see the following document.

FM3 Family Flash Programming Manual

Note:

The flash programming manual for each series are provided.
See the appropriate flash programming manual for the series that you are using.

How to Use This Manual

Finding a Function

The following methods can be used to search for the explanation of a desired function in this manual:

Search from the table of the contents
: The table of the contents lists the manual contents in the order of description.

Search from the register
: The address where each register is located is not described in the text. To verify the address of a register, see "A. Register Map" in "Appendixes".

About the Chapters

Basically, this manual explains Timer Part.

Terminology

This manual uses the following terminology.

Term	Explanation
Word	Indicates access in units of 32 bits.
Half word	Indicates access in units of 16 bits.
Byte	Indicates access in units of 8 bits.

Notations

The notations in bit configuration of the register explanation of this manual are written as follows.

bit:	bit number
Field:	bit field name
Attribute:	Attributes for read and write of each bit
R:	Read only
W:	Write only
R/W:	Readable/Writable
-:	Undefined
Initial value:	Initial value of the register after reset
0:	Initial value is 0
1:	Initial value is 1
X:	Initial value is undefined

The multiple bits are written as follows in this manual.
Example: bit7:0 indicates the bits from bit7 to bit0

The values such as for addresses are written as follows in this manual.

Hexadecimal number:	"0x" is attached in the beginning of a value as a prefix (example: 0xFFFF)
Binary number:	"0b" is attached in the beginning of a value as a prefix (example: 0b1111)
Decimal number:	Written using numbers only (example: 1000)

The target products in this manual

In this manual, the products are classified into the following groups and are described as follows. For the descriptions such as "TYPE0", see the relevant items of the target product in the list below.

Table 1 TYPE0 Product list

Description in this manual	Flash memory size			
	512 Kbytes	384 Kbytes	256 Kbytes	128 Kbytes
TYPE0	MB9BF506N MB9BF506R MB9BF506NA MB9BF506RA MB9BF506NB MB9BF506RB	MB9BF505N MB9BF505R MB9BF505NA MB9BF505RA MB9BF505NB MB9BF505RB	MB9BF504N MB9BF504R MB9BF504NA MB9BF504RA MB9BF504NB MB9BF504RB	-
	MB9BF406N MB9BF406R MB9BF406NA MB9BF406RA	MB9BF405N MB9BF405R MB9BF405NA MB9BF405RA	MB9BF404N MB9BF404R MB9BF404NA MB9BF404RA	-
	MB9BF306N MB9BF306R MB9BF306NA MB9BF306RA MB9BF306NB MB9BF306RB	MB9BF305N MB9BF305R MB9BF305NA MB9BF305RA MB9BF305NB MB9BF305RB	MB9BF304N MB9BF304R MB9BF304NA MB9BF304RA MB9BF304NB MB9BF304RB	-
	MB9BF106N MB9BF106R MB9BF106NA MB9BF106RA	MB9BF105N MB9BF105R MB9BF105NA MB9BF105RA	MB9BF104N MB9BF104R MB9BF104NA MB9BF104RA	MB9BF102N MB9BF102R MB9BF102NA MB9BF102RA
	-	MB9AF105N MB9AF105R MB9AF105NA MB9AF105RA	MB9AF104N MB9AF104R MB9AF104NA MB9AF104RA	MB9AF102N MB9AF102R MB9AF102NA MB9AF102RA

Table 2 TYPE1 Product list

Description in this manual	Flash memory size				
	512 Kbytes	384 Kbytes	256 Kbytes	128 Kbytes	64 Kbytes
TYPE1	MB9AF316M MB9AF316N MB9AF316MA MB9AF316NA	MB9AF315M MB9AF315N MB9AF315MA MB9AF315NA	MB9AF314L MB9AF314M MB9AF314N MB9AF314L MB9AF314M MB9AF314N	MB9AF312L MB9AF312M MB9AF312N MB9AF312LA MB9AF312MA MB9AF312NA	MB9AF311L MB9AF311M MB9AF311N MB9AF311LA MB9AF311MA MB9AF311NA
	MB9AF116M MB9AF116N MB9AF116MA MB9AF116NA	MB9AF115M MB9AF115N MB9AF115MA MB9AF115NA	MB9AF114L MB9AF114M MB9AF114N MB9AF114LA MB9AF114MA MB9AF114NA	MB9AF112L MB9AF112M MB9AF112N MB9AF112LA MB9AF112MA MB9AF112NA	MB9AF111L MB9AF111M MB9AF111N MB9AF111LA MB9AF111MA MB9AF111NA

Table 3 TYPE2 Product list

Description in this manual	Flash memory size		
	1 Mbytes	768 Kbytes	512 Kbytes
TYPE2	MB9BFD18S MB9BFD18T	MB9BFD17S MB9BFD17T	MB9BFD16S MB9BFD16T
	MB9BF618S MB9BF618T	MB9BF617S MB9BF617T	MB9BF616S MB9BF616T
	MB9BF518S MB9BF518T	MB9BF517S MB9BF517T	MB9BF516S MB9BF516T
	MB9BF418S MB9BF418T	MB9BF417S MB9BF417T	MB9BF416S MB9BF416T
	MB9BF318S MB9BF318T	MB9BF317S MB9BF317T	MB9BF316S MB9BF316T
	MB9BF218S MB9BF218T	MB9BF217S MB9BF217T	MB9BF216S MB9BF216T
	MB9BF118S MB9BF118T	MB9BF117S MB9BF117T	MB9BF116S MB9BF116T

Table 4 TYPE3 Product list

Description in this manual	Flash memory size	
	128 Kbytes	64 Kbytes
TYPE3	MB9AF132K MB9AF132L	MB9AF131K MB9AF131L
	MB9AF132KA MB9AF132LA	MB9AF131KA MB9AF131LA
	MB9AF132KB MB9AF132LB	MB9AF131KB MB9AF131LB

Table 5 TYPE4 Product list

Description in this manual	Flash memory size			
	512 Kbytes	384 Kbytes	256 Kbytes	128 Kbytes
TYPE4	MB9BF516N MB9BF516R	MB9BF515N MB9BF515R	MB9BF514N MB9BF514R	MB9BF512N MB9BF512R
	MB9BF416N MB9BF416R	MB9BF415N MB9BF415R	MB9BF414N MB9BF414R	MB9BF412N MB9BF412R
	MB9BF316N MB9BF316R	MB9BF315N MB9BF315R	MB9BF314N MB9BF314R	MB9BF312N MB9BF312R
	MB9BF116N MB9BF116R	MB9BF115N MB9BF115R	MB9BF114N MB9BF114R	MB9BF112N MB9BF112R

Table 6 TYPE5 Product list

Description in this manual	Flash memory size	
	128 Kbytes	64 Kbytes
TYPE5	MB9AF312K	MB9AF311K
	MB9AF112K	MB9AF111K

Table 7 TYPE6 product list

Description in this manual	Flash memory size		
	256 Kbytes	128 Kbytes	64 Kbytes
TYPE6	MB9AFB44L MB9AFB44M MB9AFB44N MB9AFB44LA MB9AFB44MA MB9AFB44NA MB9AFB44LB MB9AFB44MB MB9AFB44NB	MB9AFB42L MB9AFB42M MB9AFB42N MB9AFB42LA MB9AFB42MA MB9AFB42NA MB9AFB42LB MB9AFB42MB MB9AFB42NB	MB9AFB41L MB9AFB41M MB9AFB41N MB9AFB41LA MB9AFB41MA MB9AFB41NA MB9AFB41LB MB9AFB41MB MB9AFB41NB
	MB9AFA44L MB9AFA44M MB9AFA44N MB9AFA44LA MB9AFA44MA MB9AFA44NA MB9AFA44LB MB9AFA44MB MB9AFA44NB	MB9AFA42L MB9AFA42M MB9AFA42N MB9AFA42LA MB9AFA42MA MB9AFA42NA MB9AFA42LB MB9AFA42MB MB9AFA42NB	MB9AFA41L MB9AFA41M MB9AFA41N MB9AFA41LA MB9AFA41MA MB9AFA41NA MB9AFA41LB MB9AFA41MB MB9AFA41NB
	MB9AF344L MB9AF344M MB9AF344N MB9AF344LA MB9AF344MA MB9AF344NA MB9AF344LB MB9AF344MB MB9AF344NB	MB9AF342L MB9AF342M MB9AF342N MB9AF342LA MB9AF342MA MB9AF342NA MB9AF342LB MB9AF342MB MB9AF342NB	MB9AF341L MB9AF341M MB9AF341N MB9AF341LA MB9AF341MA MB9AF341NA MB9AF341LB MB9AF341MB MB9AF341NB
	MB9AF144L MB9AF144M MB9AF144N MB9AF144LA MB9AF144MA MB9AF144NA MB9AF144LB MB9AF144MB MB9AF144NB	MB9AF142L MB9AF142M MB9AF142N MB9AF142LA MB9AF142MA MB9AF142NA MB9AF142LB MB9AF142MB MB9AF142NB	MB9AF141L MB9AF141M MB9AF141N MB9AF141LA MB9AF141MA MB9AF141NA MB9AF141LB MB9AF141MB MB9AF141NB

Table 8 TYPE7 product list

Description in this manual	Flash memory size	
	128 Kbytes	64 Kbytes
TYPE7	MB9AFA32L MB9AFA32M MB9AFA32N	MB9AFA31L MB9AFA31M MB9AFA31N
	MB9AF132M MB9AF132N	MB9AF131M MB9AF131N
	MB9AFAA2L MB9AFAA2M MB9AFAA2N	MB9AFAA1L MB9AFAA1M MB9AFAA1N
	MB9AF1A2L MB9AF1A2M MB9AF1A2N	MB9AF1A1L MB9AF1A1M MB9AF1A1N

Table 9 TYPE8 product list

Description in this manual	Flash memory size		
	512 Kbytes	384 Kbytes	256 Kbytes
TYPE8	MB9AF156M MB9AF156N MB9AF156R MB9AF156MA MB9AF156NA MB9AF156RA MB9AF156MB MB9AF156NB MB9AF156RB	MB9AF155M MB9AF155N MB9AF155R MB9AF155MA MB9AF155NA MB9AF155RA MB9AF155MB MB9AF155NB MB9AF155RB	MB9AF154M MB9AF154N MB9AF154R MB9AF154MA MB9AF154NA MB9AF154RA MB9AF154MB MB9AF154NB MB9AF154RB

Table 10 TYPE9 product list

Description in this manual	Flash memory size		
	256 Kbytes	128 Kbytes	64 Kbytes
TYPE9	MB9BF524K MB9BF524L MB9BF524M	MB9BF522K MB9BF522L MB9BF522M	MB9BF521K MB9BF521L MB9BF521M
	MB9BF324K MB9BF324L MB9BF324M	MB9BF322K MB9BF322L MB9BF322M	MB9BF321K MB9BF321L MB9BF321M
	MB9BF124K MB9BF124L MB9BF124M	MB9BF122K MB9BF122L MB9BF122M	MB9BF121K MB9BF121L MB9BF121M

Table 11 TYPE10 product list

Description in this manual	Flash memory size
	64 Kbytes
TYPE10	MB9BF121J

Table 12 TYPE11 product list

Description in this manual	Flash memory size
	64 Kbytes
TYPE11	MB9AF421K MB9AF421L
	MB9AF121K MB9AF121L

Table 13 TYPE12 product list

Description in this manual	Flash memory size	
	1.5 Mbytes	1 Mbytes
TYPE12	MB9BF529S MB9BF529T MB9BF529SA MB9BF529TA	MB9BF528S MB9BF528T MB9BF528SA MB9BF528TA
	MB9BF429S MB9BF429T MB9BF429SA MB9BF429TA	MB9BF428S MB9BF428T MB9BF428SA MB9BF428TA
	MB9BF329S MB9BF329T MB9BF329SA MB9BF329TA	MB9BF328S MB9BF328T MB9BF328SA MB9BF328TA
	MB9BF129S MB9BF129T MB9BF129SA MB9BF129TA	MB9BF128S MB9BF128T MB9BF128SA MB9BF128TA

Contents

CHAPTER 1: System Overview 21
1. Bus Architecture 22
1.1. Bus Block Diagram 24
1.2. Memory Architecture 25
1.3. Memory Map 26
1.4. Peripheral Address Map 27
2. Cortex-M3 Architecture 30
2.1. Option configuration 32
3. Mode 34
CHAPTER 2-1: Clock 37
1. Clock Generation Unit Overview 38
2. Clock Generation Unit Configuration/Block Diagram 39
3. Clock Generation Unit Operations 43
3.1. Selecting the clock mode 43
3.2. Internal bus clock frequency division control 44
3.3. PLL clock control 45
3.4. Oscillation stabilization wait time 50
3.5. Interrupt Factors 52
4. Clock Setup Procedure Examples 53
5. List of Clock Generation Unit Registers 55
5.1. System Clock Mode Control Register (SCM_CTL) 56
5.2. System Clock Mode Status Register (SCM_STR) 58
5.3. Base Clock Prescaler Register (BSC_PSR) 60
5.4. APB0 Prescaler Register (APBC0_PSR) 61
5.5. APB1 Prescaler Register (APBC1_PSR) 62
5.6. APB2 Prescaler Register (APBC2_PSR) 63
5.7. Software Watchdog Clock Prescaler Register (SWC_PSR) 64
5.8. Trace Clock Prescaler Register (TTC_PSR) 65
5.9. Clock Stabilization Wait Time Register (CSW_TMR) 66
5.10. PLL Clock Stabilization Wait Time Setup Register (PSW_TMR) 68
5.11. PLL Control Register 1 (PLL_CTL1) 70
5.12. PLL Control Register 2 (PLL_CTL2) 71
5.13. Debug Break Watchdog Timer Control Register (DBWDT_CTL) 73
5.14. Interrupt Enable Register (INT_ENR) 74
5.15. Interrupt Status Register (INT_STR) 75
5.16. Interrupt Clear Register (INT_CLR) 76
6. Clock Generation Unit Usage Precautions 78

CHAPTER 2-2: High-Speed CR Trimming 81
1. High-Speed CR Trimming Function Overview 82
2. High-Speed CR Trimming Function Configuration and Block Diagram 83
3. High-Speed CR Trimming Function Operation 84
4. High-Speed CR Trimming Function Setup Procedure Example 85
5. High-Speed CR Trimming Function Register List 98
5.1. High-speed CR oscillation Frequency Division Setup Register (MCR_PSR) 99
5.2. High-speed CR oscillation Frequency Trimming Register (MCR_FTRM) 101
5.3. High-speed CR oscillation Frequency Trimming Register (MCR_TTRM) 105
5.4. High-Speed CR Oscillation Register Write-Protect Register (MCR_RLR) 106
6. High-Speed CR Trimming Function Usage Precautions 107
CHAPTER 2-3: Low-Speed CR Prescaler 109
1. Low-Speed CR Prescaler Overview 110
2. Low-Speed CR Prescaler Configuration 111
3. Low-Speed CR Prescaler Operation amd Setup Procedure Example 112
4. Low-Speed CR Prescaler Register 115
4.1. Low-speed CR Prescaler Control Register (LCR_PRSLD) 116
CHAPTER 3: Clock supervisor 117
1. Overview 118
2. Configurations and Block Diagrams 119
3. Explanation of Operations 121
4. Setup Procedure Examples 122
5. Operation Examples 124
6. Register list 128
6.1. CSV control register (CSV_CTL) 129
6.2. CSV status register (CSV_STR) 131
6.3. Frequency detection window setting register (Upper) (FCSWH_CTL) 132
6.4. Frequency detection window setting register (Lower) (FCSWL_CTL) 133
6.5. Frequency detection counter register (FCSWD_CTL) 134
7. Usage Precautions 135
CHAPTER 4: Resets 137
1. Overview 138
2. Configuration 139
3. Explanation of Operations 140
3.1. Reset Factors 141
3.2. Resetting Inside the Device 146
3.2.1. Resets to Cortex-M3 147
3.2.2. Resets to Peripheral Circuit 148
3.3. Reset Sequence 149
3.4. Operations After Resets are Cleared 151
4. Registers 152
4.1. Reset Factor Register (RST_STR) 153
CHAPTER 5-1: Low-voltage Detection Configuration 157
1. Configuration 158
CHAPTER 5-2: Low-voltage Detection (A) 159
1. Overview 160
2. Configuration 161
3. Explanation of Operations 163
4. Setup Procedure Examples 166

5. Registers 167
5.1. Low-voltage Detection Voltage Control Register (LVD_CTL) 168
5.2. Low-voltage Detection Interrupt Register (LVD_STR) 170
5.3. Low-voltage Detection Interrupt Clear Register (LVD_CLR) 171
5.4. Low-voltage Detection Voltage Protection Register (LVD_RLR) 172
5.5. Low-voltage Detection Circuit Status Register (LVD_STR2) 173
CHAPTER 5-3: Low-voltage Detection (B) 175
1. Overview 176
2. Configuration 177
3. Explanation of Operations 179
4. Setup Procedure Examples 183
5. Registers 185
5.1. Low-voltage Detection Voltage Control Register (LVD_CTL) 186
5.2. Low-voltage Detection Interrupt Register (LVD_STR) 189
5.3. Low-voltage Detection Interrupt Clear Register (LVD_CLR) 190
5.4. Low-voltage Detection Voltage Protection Register (LVD_RLR) 191
5.5. Low-voltage Detection Circuit Status Register (LVD_STR2) 192
6. Usage Precautions 193
CHAPTER 5-4: Low-voltage Detection (C) 195
1. Overview 196
2. Configuration 197
3. Explanation of Operations 199
4. Setup Procedure Examples 202
5. Registers 204
5.1. Low-voltage Detection Voltage Control Register (LVD_CTL) 205
5.2. Low-voltage Detection Interrupt Register (LVD_STR) 209
5.3. Low-voltage Detection Interrupt Clear Register (LVD_CLR) 210
5.4. Low-voltage Detection Voltage Protection Register (LVD_RLR) 211
5.5. Low-voltage Detection Circuit Status Register (LVD_STR2) 212
6. Usage Precautions 213
CHAPTER 6: Low Power Consumption Mode 215
1. Overview of Low Power Consumption Mode 216
2. Configuration of CPU Operation Modes 222
3. Operations of Standby Modes 229
3.1. Operations of SLEEP modes (high speed CR sleep, main sleep, PLL sleep, low speed CR sleep, and sub sleep modes) 232
3.2. Operations of TIMER modes (high speed CR timer, main timer, PLL timer, low speed CR timer, and sub timer modes) 234
3.3. Operation of RTC Mode 236
3.4. Operations of STOP mode 239
4. Standby Mode Setting Procedure Examples 242
5. Description of Deep Standby Mode Operation 245
5.1. Operation of Deep Standby RTC Mode 247
5.2. Operation of Deep Standby Stop Mode 249
6. Deep Standby Mode Setting Procedure Examples 251
7. Deep Standby Return Factor Determination Procedure 253

8. List of Low Power Consumption Mode Registers 254
8.1. Standby Mode Control Register (STB_CTL) 255
8.2. Sub Oscillation Circuit Power Supply Control Register (REG_CTL) 257
8.3. Sub Clock Control Register (RCK_CTL) 258
8.4. RTC Mode Control Register (PMD_CTL) 259
8.5. Deep Standby Return Factor Register 1 (WRFSR) 260
8.6. Deep Standby Return Factor Register 2 (WIFSR) 261
8.7. Deep Standby Return Enable Register (WIER) 263
8.8. WKUP Pin Input Level Register (WILVR) 265
8.9. Deep Standby RAM Retention Register (DSRAMR) 266
8.10. Backup Registers from 01 to 16 (BUR01 to 16) 267
9. Usage Precautions 268
CHAPTER7-1: Configuration of interrupts 269
1. Configuration 270
CHAPTER 7-2: Interrupts (A) 275
1. Overview 276
2. Configuration 277
3. Exception and Interrupt Factor Vectors 278
4. Registers 281
4.1. DMA Request Selection Register (DRQSEL0) 283
4.2. DMA Request Select Register 1 (DRQSEL1) 287
4.3. DMA Request Extended Selection Register (DQESEL) 288
4.4. EXC02 Batch Read Register (EXC02MON) 291
4.5. IRQ00 Batch Read Register (IRQ00MON) 292
4.6. IRQ01 Batch Read Register (IRQ01MON) 293
4.7. IRQ02 Batch Read Register (IRQ02MON) 294
4.8. IRQ03 Batch Read Register (IRQ03MON) 295
4.9. IRQ04 Batch Read Register (IRQ04MON) 297
4.10. IRQ05 Batch Read Register (IRQ05MON) 298
4.11. IRQ06 Batch Read Register (IRQ06MON) 300
4.12. IRQ07/09/11/13/15/17/19/21 Batch Read Register (IRQxxMON) 302
4.13. IRQ08/10/12/14/16/18/20/22 Batch Read Register (IRQxxMON) 303
4.14. IRQ23 Batch Read Register (IRQ23MON) 304
4.15. IRQ24 Batch Read Register (IRQ24MON) 305
4.16. IRQ25/26 Batch Read Register (IRQxxMON) 307
4.17. IRQ27 Batch Read Register (IRQ27MON) 308
4.18. IRQ28 Batch Read Register (IRQ28MON) 309
4.19. IRQ29 Batch Read Register (IRQ29MON) 311
4.20. IRQ30 Batch Read Register (IRQ30MON) 313
4.21. IRQ31 Batch Read Register (IRQ31MON) 315
4.22. IRQ32 Batch Read Register (IRQ32MON) 317
4.23. IRQ33 Batch Read Register (IRQ33MON) 318
4.24. IRQ34 Batch Read Register (IRQ34MON) 319
4.25. IRQ35 Batch Read Register (IRQ35MON) 320
4.26. IRQ36 Batch Read Register (IRQ36MON) 321
4.27. IRQ37 Batch Read Register (IRQ37MON) 322
4.28. IRQ38/39/40/41/42/43/44/45 Batch Read Register (IRQxxMON) 323
4.29. IRQ46 Batch Read Register (IRQ46MON) 324
4.30. IRQ47 Batch Read Register (IRQ47MON) 326
4.31. USB ch.0 Odd Packet Size DMA Enable Register (ODDPKS) 327
4.32. USB ch.1 Odd Packet Size DMA Enable Register (ODDPKS1) 329
5. Usage Precautions 331

CHAPTER 7-3: CHAPTER: Interrupts (B) 333
1. Overview 334
2. Configuration 335
3. Exception and Interrupt Factor Vectors 336
4. Registers 339
4.1. DMA Request Selection Register (DRQSEL) 341
4.2. EXC02 Batch Read Register (EXC02MON) 344
4.3. IRQ00 Batch Read Register (IRQ00MON) 345
4.4. IRQ01 Batch Read Register (IRQ01MON) 346
4.5. IRQ02 Batch Read Register (IRQ02MON) 347
4.6. IRQ03 to IRQ10 Batch Read Register (IRQ03MON to IRQ10MON) 348
4.7. IRQ11/39/40 Batch Read Register (IRQxxMON) 349
4.8. IRQ12 Batch Read Register (IRQ12MON) 350
4.9. IRQ13 Batch Read Register (IRQ13MON) 351
4.10. IRQ014 Batch Read Register (IRQ14MON) 353
4.11. IRQ15/16/17/18 Batch Read Register (IRQxxMON) 354
4.12. IRQ19/21/42/44 Batch Read Register (IRQxxMON) 355
4.13. IRQ20/22/43/45 Batch Read Register (IRQxxMON) 356
4.14. IRQ23 Batch Read Register (IRQ23MON) 357
4.15. IRQ24 Batch Read Register (IRQ24MON) 358
4.16. IRQ25/26 Batch Read Register (IRQxxMON) 360
4.17. IRQ27 Batch Read Register (IRQ27MON) 362
4.18. IRQ28/29/30 Batch Read Register (IRQxxMON) 364
4.19. IRQ31 Batch Read Register (IRQ31MON) 366
4.20. IRQ32 Batch Read Register (IRQ32MON) 368
4.21. IRQ33 Batch Read Register (IRQ33MON) 370
4.22. IRQ34 Batch Read Register (IRQ34MON) 371
4.23. IRQ35 Batch Read Register (IRQ35MON) 372
4.24. IRQ36 Batch Read Register (IRQ36MON) 373
4.25. IRQ37 Batch Read Register (IRQ37MON) 374
4.26. IRQ38 Batch Read Register (IRQ38MON) 375
4.27. IRQ41 Batch Read Register (IRQ41MON) 376
4.28. IRQ46 Batch Read Register (IRQ46MON) 377
4.29. IRQ47 Batch Read Register (IRQ47MON) 379
4.30. USB ch.0 Odd Packet Size DMA Enable Register (ODDPKS) 380
4.31. Interrupt Factor Vector Relocate Setting Register (IRQCMODER) 382
4.32. Interrupt Factor Selection Register0 (RCINTSEL0) 383
4.33. Interrupt Factor Selection Register1 (RCINTSEL1) 384
5. Usage Precautions 387
CHAPTER 7-4: Interrupts (C) 389
1. Overview 390
2. Configuration 391
3. Exception and Interrupt Factor Vector 392

4. Registers 394
4.1. EXC02 Batch Read Register (EXC02MON) 396
4.2. IRQ00 Batch Read Register (IRQ00MON) 397
4.3. IRQ01 Batch Read Register (IRQ01MON) 398
4.4. IRQ02 Batch Read Register (IRQ02MON) 399
4.5. IRQ03 Batch Read Register (IRQ03MON) 400
4.6. IRQ04 Batch Read Register (IRQ04MON) 401
4.7. IRQ05 Batch Read Register (IRQ05MON) 402
4.8. IRQ06/08/10/12/14/16/18/20 Batch Read Register (IRQxxMON) 403
4.9. IRQ07/09/11/13/15/17/19/21 Batch Read Register (IRQxxMON) 404
4.10. IRQ22 Batch Read Register (IRQ22MON) 405
4.11. IRQ23 Batch Read Register (IRQ23MON) 406
4.12. IRQ24 Batch Read Register (IRQ24MON) 407
4.13. IRQ25 Batch Read Register (IRQ25MON) 408
4.14. IRQ26 Batch Read Register (IRQ26MON) 409
4.15. IRQ27 Batch Read Register (IRQ27MON) 410
4.16. IRQ28 Batch Read Register (IRQ28MON) 411
4.17. IRQ29 Batch Read Register (IRQ29MON) 413
4.18. IRQ30 Batch Read Register (IRQ30MON) 414
4.19. IRQ31 Batch Read Register (IRQ31MON) 415
5. Usage Precautions 416
CHAPTER 8: External Interrupt and NMI Control Sections 417
1. Overview 418
2. Block Diagram 419
3. Operations and Setting Procedure Examples 420
3.1. Operations of External Interrupt Control Section 421
3.2. Operations of NMI Control Section 423
3.3. Returning from Timer or Stop Mode 424
4. Registers 426
4.1. External Interrupt Enable Register (ENIR) 427
4.2. External Interrupt Factor Register (EIRR) 428
4.3. External Interrupt Factor Clear Register (EICL) 429
4.4. External Interrupt Factor Level Register (ELVR) 430
4.5. External Interrupt Factor Level Register 1 (ELVR1) 431
4.6. Non Maskable Interrupt Factor Register (NMIRR) 432
4.7. Non Maskable Interrupt Factor Clear Register (NMICL) 433
CHAPTER 9: DMAC 435
1. Overview of DMAC 436
2. Configuration of DMAC 437
2.1. DMAC and System Configuration 438
2.2. I/O Signals of DMAC 440
3. Functions and Operations of DMAC 443
3.1. Software-Block Transfer 444
3.2. Software-Burst Transfer 446
3.3. Hardware-Demand Transfer 447
3.4. Hardware-Block Transfer & Burst Transfer 448
3.5. Channel Priority Control 450
4. DMAC Control 451
4.1. Overview of DMAC Control 452
4.2. DMAC Operation and Control Procedure for Software Transfer 453
4.3. DMAC Operation and Control Procedure for Hardware (EM=0) Transfer 460
4.4. DMAC Operation and Control Procedure for Hardware (EM=1) Transfer 469

5. Registers of DMAC 473
5.1. List of Registers 474
5.2. Entire DMAC Configuration Register (DMACR) 475
5.3. Configuration A Register (DMACA) 477
5.4. Configuration B Register (DMACB) 480
5.5. Transfer Source Address Register (DMACSA) 484
5.6. Transfer Destination Address Register (DMACDA) 485
6. Usage Precautions 486
CHAPTER 10: I/O PORT 487
1. Overview 488
2. Configuration, Block Diagram, and Operation 489
3. Setup Procedure Example 498
4. Register List 499
4.1. Port Function Setting Register (PFRx) 503
4.2. Pull-up Setting Register (PCRx) 504
4.3. Port input/output Direction Setting Register (DDRx) 506
4.4. Port Input Data Register (PDIRx) 508
4.5. Port Output Data Register x (PDORx) 510
4.6. Analog Input Setting Register (ADE) 512
4.7. Extended Pin Function Setting Register (EPFRx) 513
4.8. Extended Pin Function Setting Register 00 (EPFR00) 516
4.9. Extended Pin Function Setting Register 01 (EPFR01) 519
4.10. Extended Pin Function Setting Register 02 (EPFR02) 523
4.11. Extension Function Pin Setting Register 03 (EPFR03) 527
4.12. Extended Pin Function Setting Register 04 (EPFR04) 531
4.13. Extended Pin Function Setting Register 05 (EPFR05) 535
4.14. Extended Pin Function Setting Register 06 (EPFR06) 539
4.15. Extended Pin Function Setting Register 07 (EPFR07) 543
4.16. Extended Pin Function Setting Register 08 (EPFR08) 547
4.17. Extended Pin Function Setting Register 09 (EPFR09) 552
4.18. Extended Pin Function Setting Register 10 (EPFR10) 556
4.19. Extended Pin Function Setting Register 11 (EPFR11) 563
4.20. Extended Pin Function Setting Register 12 (EPFR12) 569
4.21. Extended Pin Function Setting Register 13 (EPFR13) 573
4.22. Extended Pin Function Setting Register 14 (EPFR14) 577
4.23. Extended Pin Function Setting Register 15 (EPFR15) 581
4.24. Extended Pin Function Setting Register 13 (EPFR16) 585
4.25. Extended Pin Function Setting Register 14 (EPFR17) 589
4.26. Extended Pin Function Setting Register 15 (EPFR18) 593
4.27. Special Port Setting Register (SPSR) 595
4.28. Port Pseudo Open Drain Setting Register (PZRx) 599
5. Usage Precautions 601

CHAPTER 11: CRC (Cyclic Redundancy Check) 603
1. Overview of CRC 604
2. CRC Operations 605
2.1. CRC calculation sequence 606
2.2. CRC use examples 607
3. CRC Registers 611
3.1. CRC Control Register (CRCCR) 612
3.2. Initial Value Register (CRCINIT) 614
3.3. Input Data Register (CRCIN) 615
3.4. CRC Register (CRCR) 616
CHAPTER12: External Bus Interface 617
1. Overview of External Bus Interface 618
2. Block Diagram 620
3. Operations 623
3.1. Bus Access Mode 624
3.2. SRAM and NOR Flash Memories Access 629
3.3. NAND Flash memory access 631
3.3.1. Read access to NAND Flash memory 632
3.3.2. Write (auto program) access 633
3.3.3. Auto block erase access 634
3.4. Issue of an 8-bit NAND Flash memory read/write command 635
3.5. 8-bit NAND Flash memory status read 636
3.6. 8-bit NAND Flash memory data write 637
3.7. Automatic Wait Setup 638
3.8. External RDY 641
4. Connection Examples 642
5. Setup Procedure Example 645
6. Registers 646
6.1. Mode Register 0 to Mode Register 7 (MODE0 to MODE7) 647
6.2. Timing Register 0 to Timing Register 7 (TIM0 to TIM7) 655
6.3. Area Register 0 to Area Register 7 (AREA0 to AREA7) 659
6.4. ALE Timing Register 0 to 7 (ATIM0 to ATIM7) 662
6.5. Division Clock Register (DCLKR) 664
7. Usage Precautions 666
CHAPTER 13: Debug Interface 667
1. Overview 668
2. Pin Description 669
2.1. Pins for Debug Purposes 670
2.2. ETM Pins 671
2.3. Functions Initially Assigned to Pins 672
2.4. Internal Pull-Ups of JTAG Pins 673
CHAPTER14: Flash Memory 675
CHAPTER15: Unique ID Register 677
1. Overview 678
2. Registers 679
2.1. Unique ID Register 0 (UIDR0: Unique ID Register 0) 680
2.2. Unique ID Register 1 (UIDR0: Unique ID Register 1) 681

Appendixes **683**
A Register Map 684
1. Register Map 685
B List of Notes 747
1. Notes when high-speed CR is used for the master clock 748
C List of Limitations 749
1. List of Limitations for TYPE0 Products 750
2. List of Limitations for TYPE1 Products 753
D Product TYPE List 755
1. Product TYPE List 756
E Major Changes 761
1. Major Changes 762
Revision History **784**

CHAPTER 1: System Overview

This chapter explains the system overview.

1. Bus Architecture
2. Cortex-M3 Architecture
3. Mode

1. Bus Architecture

This section explains the bus architecture.

For this series bus, AHB Bus Matrix circuit actualizes a multi-layer bus. Master and slave architectures are shown below:

● Master

- Cortex-M3 CPU(I-code Bus, D-code Bus, System Bus)
- DMAC
- Ethernet
-

● Slave

- On-chip Flash Memory (MainFlash, WorkFlash)
- On-chip SRAM (SRAM0, SRAM1)
- External Bus
- USB ch.0/ch.1
- AHB-AHB Bus Bridge
- AHB-APB Bus Bridge (APB0 to APB2)
-

See Figure 1-1 for the bus block diagram.

■ Features

● RAM Architecture

This family divides the on-chip SRAM area into two separate SRAM (SRAM0 and SRAM1). SRAM0 is connected to the I-Code bus and D-Code bus of the Cortex-M3 core. SRAM1 is connected to the System bus of the Cortex-M3 core. Also, SRAM0 and SRAM1 are connected to DMAC and other bus masters. This allows for preventing conflicts to RAM by multiple bus masters such as CPU and DMAC and allows for improving the performance. Also, because the divided RAM address areas are serial, RAM area can be utilized to the maximum extent.

● APB Extension Bus

APB1 and APB2 Peripheral Buses are APB extension bus that the following functions are originally added based on AMBA3.0. (APB0 is not included.)

- Supporting Halfword (16-bits) and Byte(8-bits) Accesses
  For supported registers, halfword access and byte access are enabled.
  See "A. Register Map" in "Appendixes" for the supported registers.

- Supporting Read-Modify-Write (RMW) Accesses
  Bit-band operation is generated RMW access.

  When performing bit-band operation to the register containing the flag that is set to 1 by hardware, the flag corresponding to the RMW access is not cleared to 0.
  The corresponding flag reads 1 in read during the RMW access and ignore 1 write.
  When the flag is set immediately after the read in the sequence from read to modify to write, the flag is not cleared in the write.

  For the corresponding flags and registers, it is described that "In RMW access, read value is 1".

<Notes>

- Bit-band operation must not be performed to a register which RMW access is prohibited.
- When Read-Modify-Write process is performed over the software without bit-band operation, RMW access is not generated.
  Therefore, in this case, the flag value can be read in read operation although a register supports RMW access, and it is necessary not to be cleared an unrelated flag mistakenly in write operation.
- For the details of bit-band operations, see the "Cortex-M3 Technical Reference Manual".

Priority Level

TYPE0 products set the bus mastership as "DMAC>CPU".

According to DMAC access settings such as a case where DMAC is always accessed by a burst transfer, access to CPU may be controlled. Please pay extra attention to DMAC transfer settings.

For products other than TYPE0, a priority of the bus mastership is determined in round-robin scheduling.

Endian

This family uses little endian byte order.

1.1. Bus Block Diagram

Figure 1-1 illustrates the bus block diagram.

Figure 1-1 Bus Block Diagram

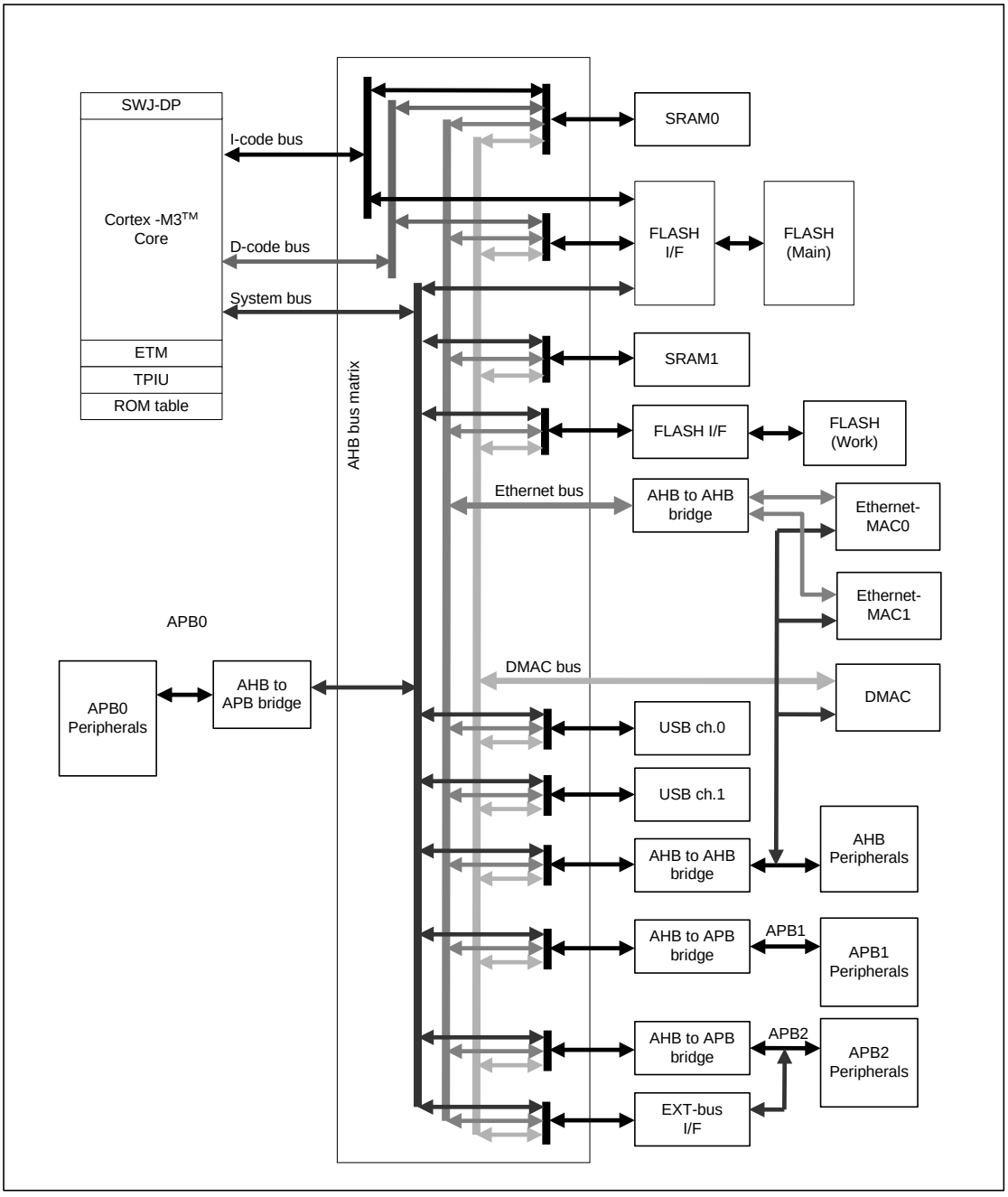

<Note>

There are some areas which no DMAC transfer can be performed. For details, see the DMAC Transfer column in Table 1-1.

1.2. Memory Architecture

This section shows the memory architecture.

For this family, 4G-byte address space is available.

Maximum 1M-byte FLASH memory, maximum 512K-byte SRAM0 area, and maximum 512K-byte SRAM1 area are defined.

Also, as an external bus area, 2G-byte area from 0x60000000 to 0xDFFFFFFF is defined. An external memory device can be connected to this area.

Section "1.3 Memory Map" illustrates the memory map, and Section "1.4 Peripheral Address Map" illustrates the peripheral address map.

For the details of Cortex-M3 private peripheral area and bit-band area shown in Figure 1-2, see "Cortex-M3 Technical Reference Manual".

1.3. Memory Map

Figure 1-2 illustrates the memory map.

Figure 1-2 Memory Map

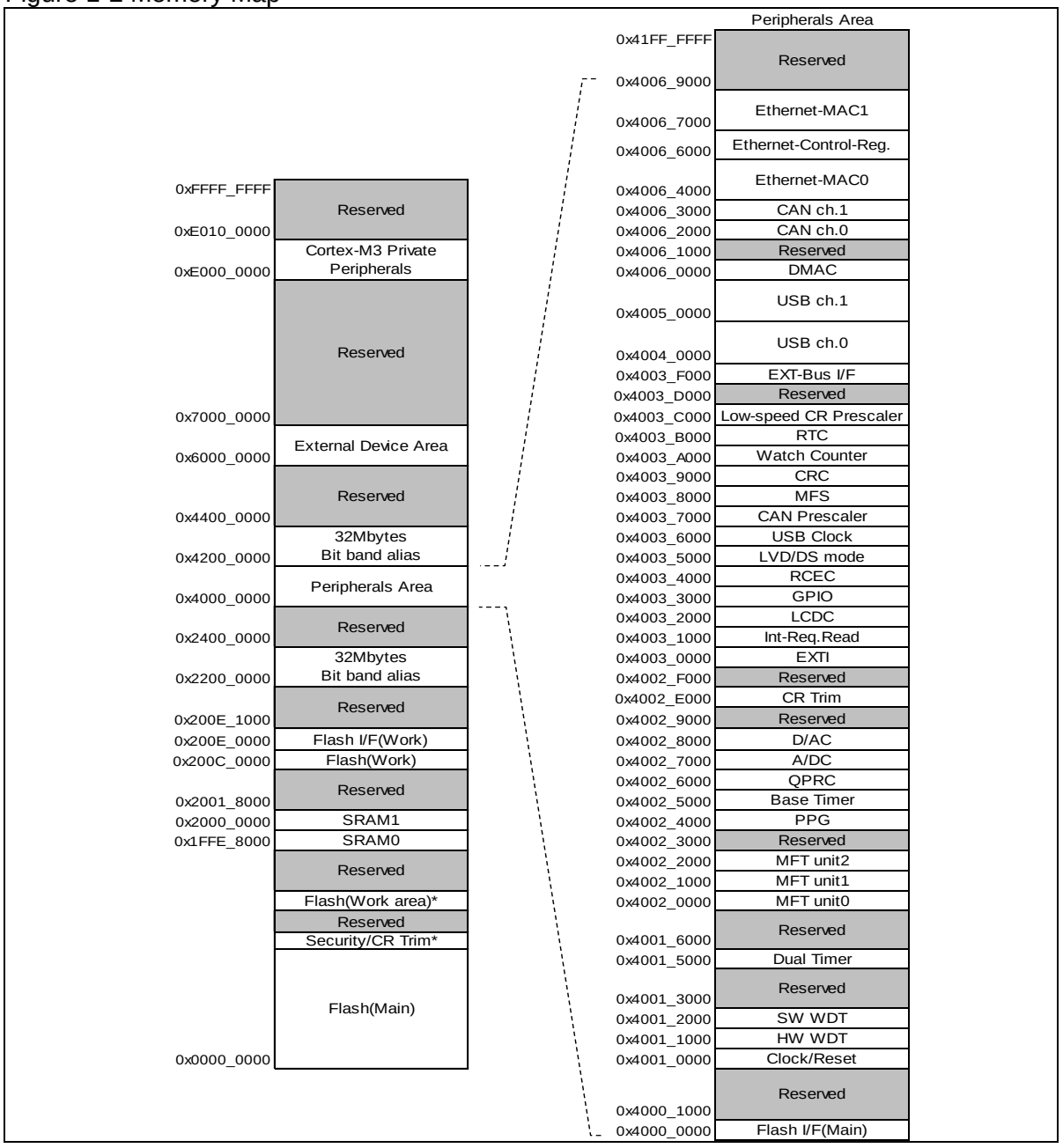

*: For addresses of Security/CR Trim areas and Flash (Work area), see the Data Sheet of the product used.

<Notes>

- Do not access to reserved area.
- For the details of flash memory, see "Flash Programming Manual" of the product used.
- Do not perform DMAC transfer to bit-band area.

1.4. Peripheral Address Map

Table 1-1 shows the peripheral address map.

Table 1-1 Peripheral Address Map

Start Address	End Address	Bus	DMAC Transfer	Peripheral	Register Map	CHAPTER
0x4000_0000	0x4000_0FFF	AHB	Disabled	FLASH IF Register (Main)/ Unique ID Register	FLASH_IF/Unique ID	*1 Chapter15
0x4000_1000	0x4000_FFFF			Reserved	-	-
0x4001_0000	0x4001_0FFF	APB0	Disabled	Clock and Reset Control	Clock / Reset	Chapter 2-1 Chapter 3 Chapter 4 Chapter 6
0x4001_1000	0x4001_1FFF			Hardware Watchdog Timer	HWWDT	Chapter 1 in Timer Part
0x4001_2000	0x4001_2FFF			Software Watchdog Timer	SWWDT	
0x4001_3000	0x4001_4FFF			Reserved	-	-
0x4001_5000	0x4001_5FFF			Dual Timer	Dual_Timer	Chapter 2 in Timer Part
0x4001_6000	0x4001_FFFF			Reserved	-	-
0x4002_0000	0x4002_0FFF	APB1	Enabled	Multi-function Timer unit0	MFT	Chapter 6 in Timer Part
0x4002_1000	0x4002_1FFF			Multi-function Timer unit1	MFT	
0x4002_2000	0x4002_2FFF			Multi-function Timer unit2	MFT	
0x4002_3000	0x4002_3FFF			Reserved	-	-
0x4002_4000	0x4002_4FFF			PPG	PPG	Chapter 7-2 in Timer Part
0x4002_5000	0x4002_5FFF			Base Timer	Base Timer/ Base Timer Selector	Chapter 5-1 Chapter 5-2 Chapter 5-3 Chapter 5-4 in Timer Part
0x4002_6000	0x4002_6FFF			QPRC	QPRC	Chapter 8-1 Chapter 8-2 in Timer Part
0x4002_7000	0x4002_7FFF			A/D Converter	A/DC	Chapter 1-2 Chapter 1-3 in Analog Macro Part
0x4002_8000	0x4002_8FFF			D/A Converter	D/AC	Chapter 2 in Analog Macro Part
0x4002_9000	0x4002_DFFF	APB1	Enabled	Reserved	-	-
0x4002_E000	0x4002_EFFF			High speed CR trimming	CR Trim	Chapter 2-2

Start Address	End Address	Bus	DMAC Transfer	Peripheral	Register Map	CHAPTER
0x4002_F000	0x4002_FFFF	APB2	Enabled	Reserved	-	-
0x4003_0000	0x4003_0FFF			External Interrupt	EXTI	Chapter 8
0x4003_1000	0x4003_1FFF			Interrupt Factor Check Register	INT-Req READ	Chapter 7-2 Chapter 7-3 Chapter 7-4
0x4003_2000	0x4003_2FFF			LCDC	LCDC	Chapter 3 in Analog Macro Part
0x4003_3000	0x4003_3FFF			GPIO	GPIO	Chapter 10
0x4003_4000	0x4003_4FFF			HDMI-CEC/Remote Control Reception	RCEC	Chapter 6-1 in Communication Macro Part
0x4003_5000	0x4003_50FF			Low Voltage Detection	LVD	Chapter 5-2 Chapter 5-3 Chapter 5-4
0x4003_5100	0x4003_5FFF			Deep standby control block	DS_Mode	Chapter 6
0x4003_6000	0x4003_6FFF			USB clock generation block USB/Ethernet clock generation block	USB Clock	Chapter 2-2 Chapter 2-3 in Communication Macro Part
0x4003_7000	0x4003_7FFF			CAN Prescaler	CAN_ Prescaler	Chapter 5-1 in Communication Macro Part
0x4003_8000	0x4003_8FFF			Multi-function serial	MFS	Chapter 1-2 Chapter 1-3 Chapter 1-4 Chapter 1-5 Chapter 1-6 in Communication Macro Part
0x4003_9000	0x4003_9FFF			CRC	CRC	Chapter 11
0x4003_A000	0x4003_AFFF			Watch counter	Watch Counter	Chapter 3-1 Chapter 3-2 in Timer Part
0x4003_B000	0x4003_BFFF			Real time clock	RTC	Chapter 4-2 Chapter 4-3 Chapter 4-4 in Timer Part
0x4003_C000	0x4003_CFFF			Low-speed CR Prescaler	Low-speed CR Prescaler	Chapter 2-3
0x4003_D000	0x4003_EFFF			Reserved	-	-
0x4003_F000	0x4003_FFFF			External Bus I/F	EXT-Bus I/F	Chapter 12

Start Address	End Address	Bus	DMAC Transfer	Peripheral	Register Map	CHAPTER
0x4004_0000	0x4004_FFFF	AHB	Enabled	USB ch.0	USB	Chapter 3-1 Chapter 3-2 in Communication Macro Part
0x4005_0000	0x4005_FFFF			USB ch.1	USB	
0x4006_0000	0x4006_0FFF			DMAC Register	DMAC	Chapter 9
0x4006_1000	0x4006_1FFF			Reserved	-	-
0x4006_2000	0x4006_2FFF			CAN ch.0	CAN	Chapter 5-2 in Communication Macro Part
0x4006_3000	0x4006_3FFF			CAN ch.1	CAN	
0x4006_4000	0x4006_5FFF			Ethernet MAC0	*2	*2
0x4006_6000	0x4006_6FFF			Ethernet System Control	*2	*2
0x4006_7000	0x4006_8FFF			Ethernet MAC1	*2	*2
0x4006_9000	0x41FF_FFFF			Reserved	-	-

*1: For the details of "FLASH IF Register", see "Flash Programming Manual" of the product used.

*2: For the details of "Ethernet MAC0", "Ethernet system control", and "Ethernet MAC1", refer to "Ethernet Part".

Start Address	End Address	Bus	DMAC Transfer	Peripheral	Register Map	Details
0x200E_0000	0x200E_1000	AHB	Enabled	Flash IF register (Work)	"FLASH IF"	*3

*3: For the details of "FLASH IF register (Work)", refer to "Flash Programming Manual" of the product used.

2. Cortex-M3 Architecture

This section explains the core architecture used in this family.

Cortex-M3 core block architecture* used in this family is as follows:

- Cortex-M3 Core
- NVIC
- MPU
-
- DWT
- ITM
- FPB
- ETM
- SWJ-DP
- TPIU
- ROM Table
-
- *: The architecture varies depending on the products. For details, see 2.1 Option Configuration.

■ Cortex-M3 Core

High-performance 32-bit processor core (Arm Cortex-M3 core) is equipped with this family.
This peripheral manual does not describe the details of Cortex-M3 core.
For the details, see "Cortex-M3 Technical Reference Manual".

- Cortex-M3 Core Version
  For the version of Cortex-M3 core, See "Data Sheet" of the product used.

■ NVIC (Nested Vectored Interrupt Controller)

For this family, one NMI (non-maskable interrupt) and maximum 48 peripheral interrupts (IRQ0 to IRQ47)*[1] can be used.
Also, interrupt priority register (from 0xE000E400) is comprised of 4 bits, and 16 interrupt priority levels can be configured.

For the details of peripheral interrupts, see the chapter of the target "Interrupts" after check the product currently used with "Configuration of interrupts", and for NMI operations, see also another chapter "External Interrupt and NMI Control Block".

NMI pin is assigned for a combined use with a general-purpose port. Its initial value after a reset release is set to the general-purpose port, and NMI input is masked.
When NMI is used, enable NMI in the port setting.
For the details, see another chapter "I/O Port".

*1: "Cortex-M3 Technical Reference Manual" defines an exception type: IRQ as an external interrupt. In this peripheral manual, to distinguish from an interrupt by an external pin "External Interrupt and NMI Control Block", the exception type: IRQ is indicated as a peripheral interrupt.

- SysTick Timer
  SysTick Timer is a system timer for OS task management integrated into NVIC.

  This family generates STCLK through dividing HCLK by eight and sets the values of SysTick Calibration Value Register (Address: 0xE000E01C) as shown below:

  bit31: NOREF = 0
  bit30: SKEW = 1
  bit23:0: TENMS = 0x0186A0 (100000)*1

  *1: TENMS value is set to a value which becomes 10 ms when 1/8 clock of HCLK is input to STCLK and that HCLK is in 80 MHz (10 MHz in 1/8 case).
  The value of TENMS is not always 10ms because HCLK can be changed to another frequency in the clock control block. Therefore, it is required to calculate an appropriate interrupt timing according to HCLK frequency.

■ DWT (Data Watchpoint & Trace Unit)

This family is equipped with DWT to use as the debug function.
DWT contains four comparators, and each comparator can be set as a hardware watchpoint.

■ ITM (Instrumentation Trace Macrocell)

This family is equipped with ITM as a debug function.
ITM is an optional application driven trace source that supports printf style debugging. The operation system (OS) and application event are traced, and the system diagnostic information is sent.

■ FPB (Flash Patch & Breakpoint)

FPB has the following functions:

- Hardware Breakpoint function
- The function of remapping from Code memory space (FLASH) to SRAM space.
-

FPB is equipped with six instruction comparators and two literal comparators.

■ MPU (Memory Protection Unit)

This family is equipped with a Cortex-M3 optional component MPU, and maximum eight areas can be defined.

■ ETM(Embedded Trace Macrocell)

This family is equipped with a Cortex-M3 optional component ETM to support instruction trace.

■ SWJ-DP

This family is equipped with SWJ-DP to support both serial wire protocol and JTAG protocol.

■ TPIU (Trace Port Interface Unit)

ETM/ITM trace information is output via TPIU.

■ ROM Table

ROM table provides the address information of a debug component to an external debug tool.

2.1. Option configuration

Table 2-1 and Table 2-2 shows the option configuration of this family for Cortex-M3 core.
For detail of feature, see Cortex-M3 Technical Reference Manual.

Table 2-1 Option configuration (1/2)

Feature	TYPE0 TYPE2 TYPE4	TYPE1 TYPE6 TYPE8 TYPE12
Memory Protection Unit (MPU)	Present	Not present
Flash Patch and Breakpoint Unit (FPB)	Present	Present
Data Watchpoint and Trace Unit (DWT)	Present	Present
Instrumentation Trace Macrocell Unit (ITM)	Present	Present
Embedded Trace Macrocell (ETM)	Present	Present*
Advanced High-performance Bus Access Port (AHB-AP)	Present	Present
AHB Trace Macrocell (HTM) interface and Embedded Trace Buffer (ETB)	Not present	Not present
Trace Port Interface Unit (TPIU)	Present	Present
Wake-up Interrupt Controller (WIC)	Not present	Not present
Debug Port AHB-AP interface	SWJ-DP	SWJ-DP
Bit-banding	Present	Present
ROM Table	Present	Present
Interrupts	48	48
Interrupt priority levels	16	16
Data endianness	Little-endian	Little-endian
Number of watchpoint comparators	4	4
Number of breakpoint comparators	Instruction: 6 Literal: 2	Instruction: 6 Literal: 2
Reset all registers	Present	Present

*: Some products do not have this function. For details, see Block Diagram in Data Sheet of the product used.

Table 2-2 Option configuration (2/2)

Feature	TYPE5 TYPE9 TYPE11	TYPE10	TYPE3 TYPE7
Memory Protection Unit (MPU)	Not present	Not present	Not present
Flash Patch and Breakpoint Unit (FPB)	Present	Present	Present
Data Watchpoint and Trace Unit (DWT)	Present	Present	Present
Instrumentation Trace Macrocell Unit (ITM)	Present	Present	Present
Embedded Trace Macrocell (ETM)	Not present	Not present	Not present
Advanced High-performance Bus Access Port (AHB-AP)	Present	Present	Present
AHB Trace Macrocell (HTM) interface and Embedded Trace Buffer (ETB)	Not present	Not present	Not present
Trace Port Interface Unit (TPIU)	Not present	Not present	Not present
Wake-up Interrupt Controller (WIC)	Not present	Not present	Not present
Debug Port AHB-AP interface	SWJ-DP	SW-DP	SWJ-DP
Bit-banding	Present	Present	Present
ROM Table	Present	Present	Present
Interrupts	48	48	32
Interrupt priority levels	16	16	8
Data endianness	Little-endian	Little-endian	Little-endian
Number of watchpoint comparators	4	4	4
Number of breakpoint comparators	Instruction: 6 Literal: 2	Instruction: 6 Literal: 2	Instruction: 6 Literal: 2
Reset all registers	Present	Present	Present

3. Mode

This section explains the function of operating modes.

In this family, the following operating modes can be used:

- User Mode
  Internal ROM (Flash) Startup : CPU obtains a reset vector from Flash memory and starts operations.
- Serial Writer Mode
  Flash serial write is enabled.

*: For the details of this mode, see "Flash Programming Manual" of the product used.

Operating modes are determined after a release of respective power-on reset, low voltage detection reset, and INITX pin input reset.

*: For the details of power consumption control and clock selection modes, see other chapters "Low Power Consumption Mode" and "Clock".

■ How to Set Operating Mode

Operating modes are configured by MD pins' (MD1 and MD0) inputs.

TYPE0 products

MD Pins		Operating Mode
MD1	MD0	
0	0	User Mode Internal ROM(Flash) Startup
0	1	Serial Writer Mode
1	0	Setting is prohibited.
1	1	Setting is prohibited.

Products other than TYPE0

MD Pins		Operating Mode
MD1	MD0	
-	0	User Mode Internal ROM(Flash) Startup
0	1	Serial Writer Mode
1	1	Setting is prohibited.

■ Startup Sequence

Processes to determine operating modes in the startup sequence are shown below:

1. MD Pin Sampling
2. Determining Operating Mode and Retaining Mode Data

The descriptions of these processes are as follows:

1. MD Pin Sampling
   Operating mode is configured by MD pin inputs (MD1, MD0). These inputs are sampled by power-on reset, low-voltage detection reset, and INITX pin input reset.
   Until each reset, which is the sampling factor, is released, MD1 and MD0 pin inputs need to be determined.

2. Determining Operating Mode and Retaining Mode Data
   MD1 and MD0 which are sampled by respective resets are retained until respective resets are input again. Operating modes are determined by the retained MD1 and MD0. Therefore, even MD1 and MD0 are changed after a reset is released, it does not affect an operating mode.

■ MD1 pin

For the products other than TYPE0, MD1 pin is used also as GPIO. This pin can be continually used as GPIO after setting a mode.

CHAPTER 2-1: Clock

This chapter explains the operating clock.

1. Clock Generation Unit Overview
2. Clock Generation Unit Configuration/Block Diagram
3. Clock Generation Unit Operations
4. Clock Setup Procedure Examples
5. Lsit of Clock Generation Unit Registers
6. Clock Generation Unit Usage Precautions

1. Clock Generation Unit Overview

This section provides an overview of the clock generation unit.

The clock generation unit generates various types of clocks used to operate the MCU.
Source clock is the generic name for external and internal oscillation clocks of this MCU.
The following five types of clocks are source clocks:

- Main clock (CLKMO)
- Sub clock (CLKSO)
- High-speed CR clock (CLKHC)
- Low-speed CR clock (CLKLC)
- Main PLL clock (CLKPLL)

Select one from the source clocks. In this chapter, the selected clock is referred to as the master clock. The master clock is a source of internal bus clocks used to operate this MCU.
Dividing the master clock frequency can generate a base clock. In addition, dividing the base clock can generate each bus clock.
In this chapter, the base clock and bus clocks are referred to as internal bus clocks. The following five types of clocks are internal bus clocks:

- Base clock (FCLK/HCLK)
- APB0 bus clock (PCLK0)
- APB1 bus clock (PCLK1)
- APB2 bus clock (PCLK2)
- TRACE clock (TPIUCLK)

In addition to source clocks, the master clock, and internal bus clocks, the following clocks are provided:

- USB clock (TYPE0, TYPE1, TYPE4, TYPE5, TYPE6, TYPE9 products)
- USB/Ethernet clock (TYPE2 products)
- CAN prescaler clock
- Software watchdog timer count clock

The following shows the features of the clock generation unit.

- It can set the oscillation stabilization wait time of the main clock (CLKMO).
- It can set the interrupt which generates at completing the oscillation stabilization wait time of the main clock (CLKMO).
- It can set the oscillation stabilization wait time of the sub clock (CLKSO).
- It can set the interrupt which generates at completing the oscillation stabilization wait time of the sub clock (CLKSO).
- It can set the oscillation stabilization wait time of the main PLL clock (CLKPLL).
- It can set the interrupt which generates at completing the oscillation stabilization wait time of the main PLL clock (CLKPLL).
- It can set the PLL multiplication ratio.
- It can select the master clock.
- It can set the frequency division ratio of each internal bus clock frequency.
- It can select run or stop of the APB1 and APB2 bus clocks.
- It can set the frequency division ratio of the software watchdog timer count clock frequency.
- It can set run/stop of the software watchdog timer count clock.
- It can set the watchdog timer count operation in debug mode.
- It includes registers for enabling clock-related interrupts, checking interrupt status, and clearing interrupt factors.

2. Clock Generation Unit Configuration/Block Diagram

This section explains configuration of the clock generation unit.

■ Source clock

Source clock is the generic name for external and internal oscillation clocks of this MCU. The following five types of clocks are source clocks:

● Main clock (CLKMO)

CLKMO is generated by connecting a crystal oscillator etc. to the main clock oscillation pins (X0, X1), or input using an external clock.

● Sub clock (CLKSO)

CLKSO is generated by connecting a crystal oscillator etc. to the sub clock oscillator pins (X0A, X1A), or input using an external clock.

● High-speed CR clock (CLKHC)

CLKHC is an output clock for the high-speed CR oscillator.

● Low-speed CR clock (CLKLC)

CLKLC is an output clock for the low-speed CR oscillator.

<Note>

- CLKLC of TYPE12 products is the clock derived by dividing the built-in low-speed CR output clock by low speed CR prescaler.
  For detail, see chapter Low-speed CR Prescaler.

● Main PLL clock (CLKPLL)

CLKPLL is generated by multiplying the main oscillation clock or high-speed CR clock using the PLL Clock Multiplication Circuit (PLL Oscillation Circuit).

■ Master clock

The signal selected from source clocks are referred to as the master clock.
The master clock is a source for all bus clocks.
The master clock value should not be larger than the maximum value in "Internal operating clock frequency: Fcc(Base clock HCLK/FCLK)"of "Data Sheet".

<Note>

- See "1. Notes when high-speed CR is used for the master clock" in "B. List of Notes" when you use the following clock for the master clock.
  - High-speed CR clock
  - Main PLL clock (When selecting high-speed CR clock for the input clock of PLL)

■ Internal bus clocks

The following signals are bus clocks generated internally.

● Base clock (HCLK/FCLK)

HCLK and FCLK are collectively called the base clock. Both HCLK and FCLK are supplied to the CPU. HCLK is a clock for macro connected to the AHB bus.
The clock frequency can be set to between 1/1 and 1/16 frequency of the master clock.
This clock stops in timer mode, RTC mode, stop mode, deep standby RTC mode, deep standby RTC mode, and deep standby stop mode.
In sleep mode, the CPU stops the supply of HCLK while continuing the supply of FCLK.

● APB0 bus clock (PCLK0)

PCLK0 is a clock for peripheral macro connected to the APB0 bus.
The clock frequency can be set to between 1/1 and 1/8 frequency of the base clock.
This clock stops in timer mode, RTC mode, stop mode, deep standby RTC mode, deep standby RTC mode, and deep standby stop mode.

● APB1 bus clock (PCLK1)

PCLK1 is a clock for peripheral macro connected to the APB1 bus.
The clock frequency can be set to between 1/1 and 1/8 frequency of the base clock.
This clock stops in timer mode, RTC mode, stop mode, deep standby RTC mode, deep standby RTC mode, and deep standby stop mode.
The supply of the clock can be also stopped by setting a register.

● APB2 bus clock (PCLK2)

PCLK2 is a clock for peripheral macro connected to the APB2 bus.
The clock frequency can be set to between 1/1 and 1/8 frequency of the base clock.
This clock stops in timer mode, RTC mode, stop mode, deep standby RTC mode, deep standby RTC mode, and deep standby stop mode.
The supply of the clock can be also stopped by setting a register.

● TPIU clock (TPIUCLK)

TPIUCLK is a clock for TRACE.
For TYPE0 and TYPE1 products, the clock frequency can be set to between 1/1 and 1/2 frequency of the base clock.
Frequency divisions of the base clock from 1/1 to 1/8 can be set for the products other than TYPE0 and TYPE 1.
This clock stops in timer mode, RTC mode, stop mode, deep standby RTC mode, deep standby RTC mode, and deep standby stop mode.
This clock output is enabled only for the products equipped with ETM.

■ Clocks other than source clocks and internal bus clocks

● USB clock

This clock generates a clock at 48 MHz, used by USB communication.
It sets the PLL oscillator for USB to generate a USB clock.
This clock stops in timer mode, RTC mode, stop mode, deep standby RTC mode, deep standby RTC mode, and deep standby stop mode.
This clock can be set independently regardless of the frequency of the master clock.
For USB clock operation settings, see Chapter "USB clock generation" in "Communication Macro Part".

USB/Ethernet clock

This clock generates a clock at 48 MHz, used by USB communication.
Also, it generates a clock for Ether-PHY.
It sets the PLL oscillator for USB/Ethernet to generate a USB/Ethernet clock.
This clock stops in timer mode, RTC mode, stop mode, deep standby RTC mode, and deep standby stop mode.
This clock can be set independently regardless of the frequency of the master clock.
For the operation setting of PLL for USB/Ethernet, see the chapter "USB/Ethernet PLL Clock Generation" in "Communication Macro Part".

CAN prescaler clock

This clock is the same clock as CLKPLL, used for CAN prescaler.
The frequency division used for the clock must be configured on the prescaler side.
This clock stops in RTC mode, stop mode, deep standby RTC mode, deep standby RTC mode, and deep standby stop mode.
For operation settings of CAN prescaler, see Chapter "CAN Prescaler" in "Communication Macro Part".

Software watchdog timer count clock (SWDOGCLK)

SWDOGCLK is a clock for the software watchdog timer connected to the APB0 bus.
The clock frequency can be set to between 1/1 and 1/8 frequency of the APB0 bus clock.
This clock stops in timer mode, RTC mode, stop mode, deep standby RTC mode, deep standby RTC mode, and deep standby stop mode.
For operation settings of the software watchdog timer, see Chapter "Watchdog Timer" in "Timer Part".

■ Block diagram

Figure 2-1 shows the block diagram of the clock generation unit.

Figure 2-1 Block Diagram of Clock Generation Unit

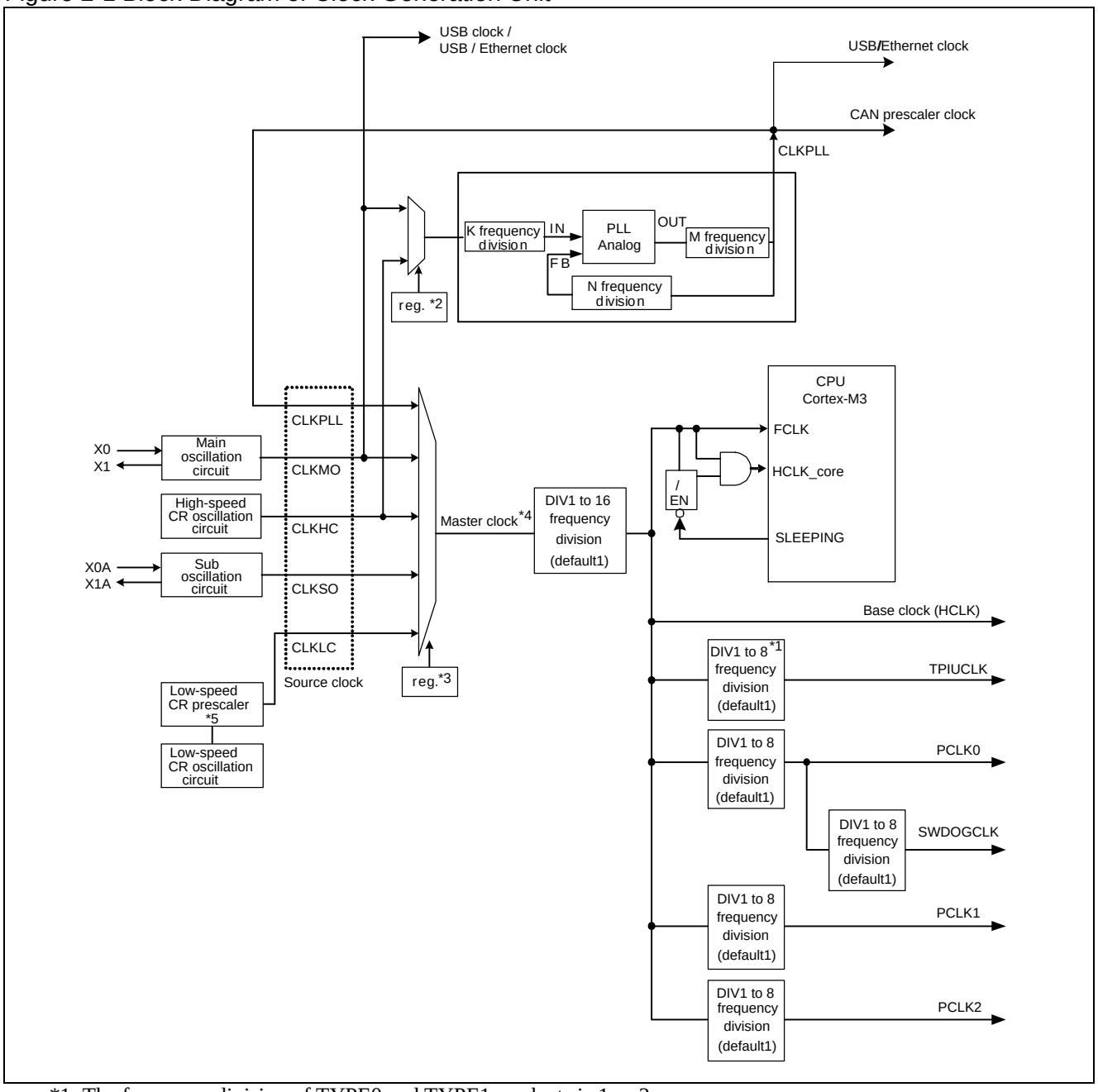

*1: The frequency division of TYPE0 and TYPE1 products is 1 or 2.
*2: PSW_TMR : PINC (PLL input clock select bit)
*3: SCM_CTL : RCS[2:0] (Master clock switch control bits)
*4: The master clock frequency should not be larger than the maximum frequency of base clock (HCLK / FCLK). For the maximum frequency of base clock (HCLK/FCLK), see "Data Sheet" of the product used.
*5: Low-speed CR prescaler is equipped to TYPE12 products.

3. Clock Generation Unit Operations

This section explains the clock generation unit.

3.1. Selecting the clock mode

■ Definition of clock mode (selecting the master clock)

The MCU clock mode is defined by the source clock selected by the system clock mode control register. Five types of clock modes are provided: Main clock mode, sub clock mode, high-speed CR clock mode, low-speed CR clock mode, and main PLL clock mode.

● Main clock mode

In main clock mode, the main clock (CLKMO) is used as a master clock. The clock runs a bus clock used to operate the CPU, and most peripheral functions.

Status of the PLL clock (CLKPLL) differs depending on the setting of the PLLE bit in the System Clock Mode Control Register (SCM_CTL), and the sub clock (CLKSO) depends on the SOSCE bit in the System Clock Mode Control Register (SCM_CTL). The high-speed CR clock (CLKHC) and low-speed CR clock (CLKLC) cannot be stopped by user program.

● Sub-clock mode

In sub clock mode, the sub clock (CLKSO) is used as a master clock. The clock runs a bus clock used to operate the CPU, and most peripheral functions.

The main clock (CLKMO), high-speed CR clock (CLKHC), and main PLL clock (CLKPLL) are stopped by hardware. The low-speed CR clock (CLKLC) cannot be stopped by user program.

● High-speed CR clock mode

In high-speed CR clock mode, the high-speed CR clock (CLKHC) is used as a master clock. The clock runs a bus clock used to operate the CPU, and most peripheral functions.

Statuses of the main clock (CLKMO), main PLL clock (CLKPLL), and sub clock (CLKSO) differ depending on the settings of MOSCE, PLLE, and SOSCE bits in the System Clock Mode Control Register (SCM_CTL). The high-speed CR clock (CLKHC) and low-speed CR clock (CLKLC) cannot be stopped by user program.

● Low-speed CR clock mode

In low-speed CR clock mode, the low-speed CR clock (CLKLC) is used as a master clock. The clock runs a bus clock used to operate the CPU, and most peripheral functions.

In low-speed CR clock mode, the main clock (CLKMO), high-speed CR clock (CLKHC), and main PLL clock (CLKPLL) are stopped by hardware. Status of the sub clock (CLKSO) differs depending on the setting of the SOSCE bit in the System Clock Mode Control Register (SCM_CTL).

● Main PLL clock mode

In main PLL clock mode, the main PLL clock (CLKPLL) is used as a master clock. The clock runs a bus clock used to operate the CPU, and most peripheral functions.

Status of the sub clock (CLKSO) differs depending on the setting of the SOSCE bit in the System Clock Mode Control Register (SCM_CTL). The high-speed CR clock (CLKHC) and low-speed CR clock (CLKLC) cannot be stopped by user program.

3.2. Internal bus clock frequency division control

This section explains the internal bus clock frequency division.

Frequency division ratio from the base clock can be set independently for each internal bus clock.
This function can set the operating frequency optimized for each circuit.

The maximum frequency of the internal bus clock differs by product. For details, see "Data Sheet" of the product used.

To set the frequency division ratio of internal bus clocks, use the Base Clock Prescaler Register (BSC_PSR), APB0 Prescaler Register (APBC0_PSR), APB1 Prescaler Register (APBC1_PSR), APB2 Prescaler Register (APBC2_PSR), and Trace Clock Prescaler Register (TTC_PSR). For details on each register, see "5. Lsit of Clock Generation Unit Registers".

■ Setting the bus clock frequency division

- The set frequency division ratio is not cleared by a software reset. The latest value is retained before the software reset.
- The value is initialized by a reset other than software resets.
  Before changing the initially set master clock to a faster source clock, be sure to set the frequency division ratio.
- If a combined value of master clock, PLL multiplication, and frequency division ratio settings exceeds the maximum operating frequency of each internal bus, the operation corresponding to the setting is not guaranteed.

3.3. PLL clock control

This section explains the PLL clock control.

The PLL Clock Control Circuit is used to generate the main PLL clock from the main clock or high-speed CR clock. The PLL Oscillation Circuit can enable/disable operation (oscillation), select the input clock, set the stabilization wait time, and set the multiplication.

■ PLL operation

The following explains operation of the main PLL clock.

- Configure the following settings using the PLL Clock Oscillation Stabilization Wait Time Setup Register (PSW_TMR).
  - Selecting the PLL input clock
  - Setting the main PLL clock stabilization wait time
- The PLL oscillation enable bit (PLLE) of the System Clock Mode Control Register (SCM_CTL) must be enabled to let the PLL Circuit start oscillating.
- When the PLL clock stabilization wait time has elapsed, and the "PLL oscillation stable bit" of the System Clock Mode Status Register (SCM_STR) indicates a stable state, the preparation for transition to main PLL clock mode completes.
- Master clock switch control bit (RCS[2:0]) of the System Clock Mode Control Register (SCM_CTL) must be set to main PLL clock mode (RCS[2:0]=010) to change to main PLL clock mode.

■ Setting the main PLL clock oscillation stabilization wait time

The details are given in "5.10 PLL Clock Stabilization Wait Time Setup Register (PSW_TMR)".

<Notes>

- For block diagram of the PLL Clock Control Circuit, see "2.Clock Generation Unit Configuration/Block Diagram".
- For the order of frequency division settings for each internal bus clock, see "4 Clock Setup Procedure Examples".
- For the oscillation stabilization wait time, see "3.4 Oscillation stabilization wait time".
- When selecting high-speed CR in the input clock of PLL, see "1. Notes when high-speed CR is used for the master clock"in "Appendixes B. List of Notes".

■ Setting the multiplication ratio to generate the main PLL clock

Each frequency division clock in the PLL Multiplication Circuit must be set using PLL Control Register 1 (PLL_CTL1) and PLL Control Register 2 (PLL_CTL2). The following Table 3-1, Table 3-2, Table 3-3, Table 3-4, Table 3-5, and Table 3-6 provide example of frequency division settings.

Table 3-1 Example of PLL multiplication ratio settings for TYPE0 products

Input clock	K	PLLin	N	PLLout	M	CLKPLL
4 MHz	1	4 MHz	20	80 MHz	1	80 MHz
4 MHz	1	4 MHz	15	60 MHz	1	60 MHz
4 MHz	1	4 MHz	15	120 MHz	2	60 MHz
5 MHz	1	5 MHz	16	80 MHz	1	80 MHz
5 MHz	1	5 MHz	12	60 MHz	1	60 MHz
5 MHz	1	5 MHz	12	120 MHz	2	60 MHz
6 MHz	1	6 MHz	10	60 MHz	1	60 MHz
6 MHz	1	6 MHz	10	120 MHz	2	60 MHz
8 MHz	1	8 MHz	10	80 MHz	1	80 MHz
10 MHz	1	10 MHz	8	80 MHz	1	80 MHz
10 MHz	1	10 MHz	6	60 MHz	1	60 MHz
10 MHz	1	10 MHz	6	120 MHz	2	60 MHz
12 MHz	1	12 MHz	5	60 MHz	1	60 MHz
12 MHz	1	12 MHz	5	120 MHz	2	60 MHz
15 MHz	1	15 MHz	4	60 MHz	1	60 MHz
16 MHz	1	16 MHz	5	80 MHz	1	80 MHz
20 MHz	1	20 MHz	4	80 MHz	1	80 MHz
30 MHz	1	30 MHz	2	120 MHz	2	60 MHz
40 MHz	2	20 MHz	4	80 MHz	1	80 MHz
48 MHz	3	16 MHz	5	80 MHz	1	80 MHz
48 MHz	4	12 MHz	5	60 MHz	1	60 MHz

<Notes>

- For PLL characteristics, see "Data Sheet" of the product used.
- Set the PLLin within the value "PLL input clock frequency: f_{PLLI}" shown in the "Data Sheet".
- The value "M×N" is a multiplication ratio for the PLLin. Set this value within the range shown in the "PLL multiple rate" of the "Data Sheet".
- The frequency of the PLLin multiplied by "M×N" becomes PLLout. Set this value within the range shown in the "PLL macro oscillation clock frequency: f_{PLLO}" of the "Data Sheet".
- The value of the PLLout divided by "M" becomes CLKPLL.
- See Figure 2-1 for the configurations of PLL and divider.
- The master clock value should not be larger than the maximum value in "Internal operating clock frequency: Fcc(Base clock HCLK/FCLK)" of "Data Sheet".

Table 3-2 Example of PLL multiplication ratio settings for TYPE1/TYPE5 products

Input clock	K	PLLin	N	PLLout	M	CLKPLL
4 MHz	1	4 MHz	10	200 MHz	5	40 MHz
5 MHz	1	5 MHz	8	200 MHz	5	40 MHz
8 MHz	1	8 MHz	5	240 MHz	6	40 MHz
8 MHz	2	4 MHz	10	200 MHz	5	40 MHz
10 MHz	1	10 MHz	4	200 MHz	5	40 MHz
10 MHz	1	10 MHz	4	240 MHz	6	40 MHz
10 MHz	1	10 MHz	4	280 MHz	7	40 MHz
10 MHz	2	5 MHz	8	200 MHz	5	40 MHz
12 MHz	3	4 MHz	10	200 MHz	5	40 MHz
16 MHz	2	8 MHz	5	240 MHz	6	40 MHz
16 MHz	4	4 MHz	10	200 MHz	5	40 MHz
20 MHz	2	10 MHz	4	200 MHz	5	40 MHz
20 MHz	4	5 MHz	8	200 MHz	5	40 MHz

Table 3-3 Example of PLL multiplication ratio settings for TYPE2/TYPE4 products

Input clock	K	PLLin	N	PLLout	M	CLKPLL
4 MHz	1	4 MHz	36	288 MHz	2	144 MHz
8 MHz	2	4 MHz	36	288 MHz	2	144 MHz
8 MHz	1	8 MHz	18	288 MHz	2	144 MHz
12 MHz	3	4 MHz	36	288 MHz	2	144 MHz
12 MHz	2	6 MHz	24	288 MHz	2	144 MHz
12 MHz	1	12 MHz	12	288 MHz	2	144 MHz
16 MHz	1	16 MHz	9	288 MHz	2	144 MHz
16 MHz	2	8 MHz	18	288 MHz	2	144 MHz
16 MHz	4	4 MHz	36	288 MHz	2	144 MHz

<Notes>

- For PLL characteristics, see "Data Sheet" of the product used.
- Set the PLLin within the value "PLL input clock frequency: f_{PLLI}" shown in "Data Sheet".
- The value "M×N" is a multiplication ratio for the PLLin. Set this value within the range shown in the "PLL multiple rate" of "Data Sheet".
- The frequency of the PLLin multiplied by "M×N" becomes PLLout. Set this value within the range shown in the "PLL macro oscillation clock frequency: f_{PLLO}" of "Data Sheet".
- The value of the PLLout divided by "M" becomes CLKPLL.
- See Figure 2-1 for the configurations of PLL and divider.
- The master clock value should not be larger than the maximum value in "Internal operating clock frequency: Fcc(Base clock HCLK/FCLK)" of "Data Sheet".

Table 3-4 Example of PLL multiplication ratio settings for TYPE3/TYPE7 products

Input clock	K	PLLin	N	PLLout	M	CLKPLL
4 MHz	1	4 MHz	3	12 MHz	1	12 MHz
4 MHz	1	4 MHz	4	16 MHz	1	16 MHz
4 MHz	1	4 MHz	5	20 MHz	1	20 MHz
5 MHz	1	5 MHz	2	10 MHz	1	10 MHz
5 MHz	1	5 MHz	4	20 MHz	1	20 MHz
6 MHz	1	6 MHz	2	12 MHz	1	12 MHz
6 MHz	1	6 MHz	3	18 MHz	1	18 MHz
8 MHz	1	8 MHz	2	16 MHz	1	16 MHz
10 MHz	1	10 MHz	2	20 MHz	1	20 MHz
10 MHz	2	5 MHz	4	20 MHz	1	20 MHz
10 MHz	1	10 MHz	1	10 MHz	1	10 MHz
12 MHz	2	6 MHz	3	18 MHz	1	18 MHz

Table 3-5 Example of PLL multiplication ratio settings for TYPE6/TYPE8/TYPE11 products

Input clock	K	PLLin	N	PLLout	M	CLKPLL
4 MHz	1	4 MHz	10	80 MHz	2	40 MHz
8 MHz	1	8 MHz	5	120 MHz	3	40 MHz
8 MHz	2	4 MHz	10	80 MHz	2	40 MHz
10 MHz	1	10 MHz	8	80 MHz	1	40 MHz
10 MHz	2	5 MHz	4	120 MHz	3	40 MHz
12 MHz	3	4 MHz	10	80 MHz	2	40 MHz
16 MHz	2	8 MHz	5	120 MHz	3	40 MHz
16 MHz	4	4 MHz	10	80 MHz	2	40 MHz
20 MHz	2	10 MHz	4	120 MHz	3	40 MHz
20 MHz	4	5 MHz	8	80 MHz	2	40 MHz

<Notes>

- For PLL characteristics, see "Data Sheet" of the product used.
- Set the PLLin within the value "PLL input clock frequency: f_{PLLI}" shown in "Data Sheet".
- The value "M×N" is a multiplication ratio for the PLLin. Set this value within the range shown in the "PLL multiple rate" of "Data Sheet".
- The frequency of the PLLin multiplied by "M×N" becomes PLLout. Set this value within the range shown in the "PLL macro oscillation clock frequency: f_{PLLO}" of "Data Sheet".
- The value of the PLLout divided by "M" becomes CLKPLL.
- See Figure 2-1 for the configurations of PLL and divider.
- The master clock value should not be larger than the maximum value in "Internal operating clock frequency: Fcc(Base clock HCLK/FCLK)" of "Data Sheet".

Table 3-6 Example of PLL multiplication ratio settings for TYPE9/TYPE10 products

Input clock	K	PLLin	N	PLLout	M	CLKPLL
4 MHz	1	4 MHz	18	144 MHz	2	72 MHz
8 MHz	1	8 MHz	9	144 MHz	2	72 MHz
8 MHz	2	4 MHz	18	144 MHz	2	72 MHz
12 MHz	3	4 MHz	18	144 MHz	2	72 MHz
16 MHz	2	8 MHz	9	144 MHz	2	72 MHz
16 MHz	4	4 MHz	18	144 MHz	2	72 MHz
24 MHz	3	8 MHz	9	144 MHz	2	72 MHz

Table 3 7 Example of PLL multiplication ratio settings for TYPE12 products

Input clock	K	PLLin	N	PLLout	M	CLKPLL
4MHz	1	4MHz	15	120MHz	2	60MHz
8MHz	2	4MHz	15	120MHz	2	60MHz
12MHz	1	12MHz	5	120MHz	2	60MHz
12MHz	2	6MHz	10	120MHz	2	60MHz
12MHz	3	4MHz	15	120MHz	2	60MHz
16MHz	4	4MHz	15	120MHz	2	60MHz
24MHz	2	12MHz	5	120MHz	2	60MHz
24MHz	4	6MHz	10	120MHz	2	60MHz
24MHz	6	4MHz	15	120MHz	2	60MHz

<Notes>

- For PLL characteristics, see "Data Sheet" of the product used.
- Set the PLLin within the value "PLL input clock frequency: f_{PLLI}" shown in "Data Sheet".
- The value "M×N" is a multiplication ratio for the PLLin. Set this value within the range shown in the "PLL multiple rate" of "Data Sheet".
- The frequency of the PLLin multiplied by "M×N" becomes PLLout. Set this value within the range shown in the "PLL macro oscillation clock frequency: f_{PLLO}" of "Data Sheet".
- The value of the PLLout divided by "M" becomes CLKPLL.
- See Figure 2-1 for the configurations of PLL and divider.
- The master clock value should not be larger than the maximum value in "Internal operating clock frequency: Fcc(Base clock HCLK/FCLK)" of "Data Sheet".

3.4. Oscillation stabilization wait time

This section explains the oscillation stabilization wait time.

An oscillation stabilization wait time is required if the source clock is not in a stable operating state. During the oscillation stabilization wait time, internal and external clocks stop the supply, only the internal time counter operates to wait until the stabilization wait time passes, a time value set in the Clock Stabilization Wait Time Register (CSW_TMR) or PLL Clock Oscillation Stabilization Wait Time Setup Register (PSW_TMR). When the wait time has been passed, the corresponding oscillator is ready to operate, and the clock can be used as a master clock.

■ Setting the oscillation stabilization wait time

- Main clock (CLKMO)
  Set the stabilization wait time of the main clock using the Clock Stabilization Wait Time Register (CSW_TMR). The set time value is counted by CLKHC.

- Sub clock (CLKSO)
  Set the stabilization wait time of the sub clock using the Clock Stabilization Wait Time Register (CSW_TMR). The set time value is counted by CLKLC.

- Main PLL clock
  Configure the following settings using the PLL Clock Oscillation Stabilization Wait Time Setup Register (PSW_TMR). The set time value is counted by CLKHC.

  - Selecting the PLL input clock
  - Setting the main PLL clock stabilization wait time

■ Cause of waiting for oscillation stability

- After the oscillation is enabled via software
  If the PLLE, SOSCE, and MOSCE bits of the System Clock Mode Control Register (SCM_CTL) are set to "1", each relevant oscillator waits during the oscillation stabilization wait time.

- When returning to watch counter interrupt, RTC interrupt, and external interrupt from RTC mode
  It returns to the clock mode before RTC mode by watch counter interrupt, RTC interrupt, and external interrupt. Since a source clock other than the sub clock is stopped in RTC mode, hardware of a source clock other than the sub clock waits for the oscillation stabilization wait time automatically.

- When returning from stop mode using an external interrupt
  The status returns to clock mode, a state before stop mode, using an external clock. During stop mode, all source clocks stop and, therefore, the hardware automatically waits during the oscillation stabilization wait time.

- After PLL operation is enabled
  After PLL operation is enabled, the PLL oscillation stabilization wait time is waited.

<Notes>

- Each set value of the oscillation stabilization wait time must be changed before the clock is enabled.
- After software reset, the oscillation stabilization wait time is not applied.
- In the stabilization wait time for main clock, sub clock and main PLL clock, the high-speed CR clock (CLKHC) counts the clock as set in the Stabilization Wait Time Setup Registers. The oscillation stabilization wait completion flag will be activated when the counting is complete, so these wait times are independent of each oscillator statuses. The oscillation stabilization wait time may be completed before oscillator stabilization if the setting of the oscillation stabilization wait time is too short.
- As the stabilization wait times for main clock and sub clock oscillators depend on the type of the oscillator (crystal, ceramics, etc.), proper oscillation stabilization wait time must be chosen for the oscillator to be used.
- Set the PLL oscillation stabilization wait time by referring to PLL Clock LOCKUP Time of the electric characteristics described in "Data Sheet" of the product used.

3.5. Interrupt Factors

This section explains interrupt factors relevant to clocks.

The clock generation unit has the following interrupt factors.

■ Interrupt factors

The clock generation unit has the following four types of interrupt factors:

- FCS (anomalous frequency detection) interrupt
  When the FCS (anomalous frequency detection) is enabled, and an anomalous frequency of the main clock is detected, an interrupt occurs.
- Main PLL clock oscillation stabilization wait completion interrupt
  When the main PLL clock oscillation stabilization wait time ends, an interrupt occurs.
- Sub clock oscillation stabilization wait completion interrupt
  When the sub clock oscillation stabilization wait time ends, an interrupt occurs.
- Main clock oscillation stabilization wait completion interrupt
  When the main clock oscillation stabilization wait time ends, an interrupt occurs.

■ Registers

The following three types of registers are provided for each interrupt factor:

- Interrupt Enable Register (INT_ENR)
  This register enables each interrupt.
- Interrupt Status Register (INT_STR)
  This register indicates each interrupt status. This register is read-only.
- Interrupt Clear Register (INT_CLR)
  This register clears each interrupt factor. This register is write-only.

4. Clock Setup Procedure Examples

This section explains procedure examples of setting up clocks.

■ Setup procedure examples

Figure 4-1 Example of clock setup procedure (Power-on -> High-speed CR run mode -> Desired clock mode)

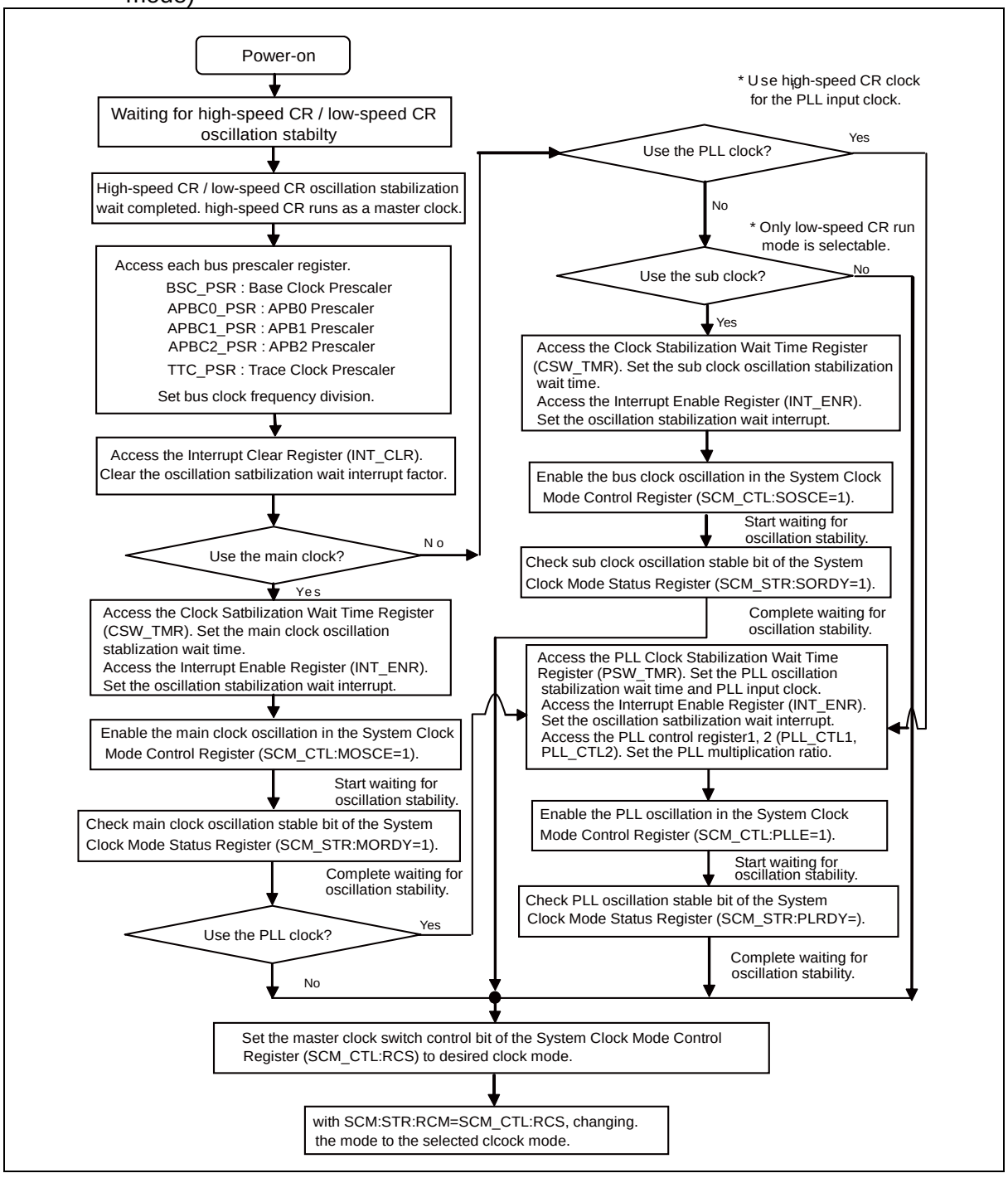

Figure 4-2 Example of clock setup procedure (Low-speed CR run mode -> Desired clock run mode)

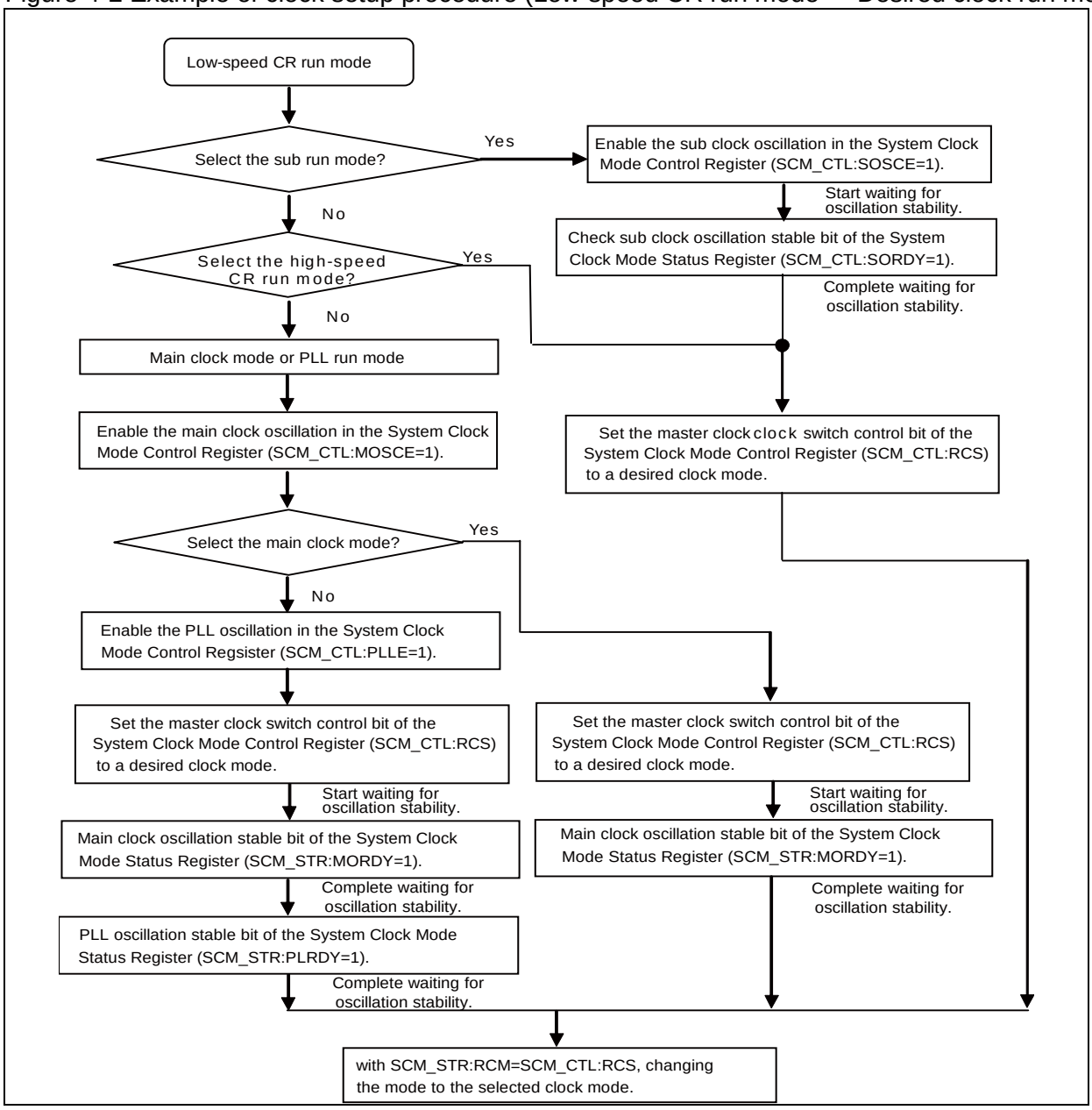

<Notes>

- Figure 4-2 assumes that settings of the oscillation stabilization wait time, interrupts, PLL multiplication ratio and bus clock frequency division for each clock have been configured previously, and they are omitted from the flowchart.
- In the sub clock mode/low-speed CR clock mode, the main clock(CLKMO), high-speed CR(CLKHC), main PLL clock(CLKPLL) is stopped by hardware. So CLKMO/CLKHC/CLKPLL does not start oscillation only setting oscillation enable bit=1. These oscillations will start by changing the SCM_CTL:RCS bit with setting oscillation enable bit=1.
- If the main clock/sub clock oscillation stabilization wait times are short and the oscillation stabilization wait times run out before oscillators stabilize, reset may be applied by the clock supervisor function.

5. Lsit of Clock Generation Unit Registers

This section provides the register list of clock generation.

■ Clock generation unit register list

Abbreviation	Register name	Reference
SCM_CTL	System Clock Mode Control Register	5.1
SCM_STR	System Clock Mode Status Register	5.2
BSC_PSR	Base Clock Prescaler Register	5.3
APBC0_PSR	APB0 Prescaler Register	5.4
APBC1_PSR	APB1 Prescaler Register	5.5
APBC2_PSR	APB2 Prescaler Register	5.6
SWC_PSR	Software Watchdog Clock Prescaler Register	5.7
TTC_PSR	Trace Clock Prescaler Register	5.8
CSW_TMR	Clock Stabilization Wait Time Register	5.9
PSW_TMR	PLL Clock Stabilization Wait Time Setup Register	5.10
PLL_CTL1	PLL Control Register 1	5.11
PLL_CTL2	PLL Control Register 2	5.12
DBWDT_CTL	Debug Break Watchdog Timer Control Register	5.13
INT_ENR	Interrupt Enable Register	5.14
INT_STR	Interrupt Status Register	5.15
INT_CLR	Interrupt Clear Register	5.16

5.1. System Clock Mode Control Register (SCM_CTL)

The SCM_CTL selects the master clock and enables/disables the clock oscillation.

■ Register configuration

bit	7	6	5	4	3	2	1	0
Field	RCS[2:0]			PLLE	SOSCE	Reserved	MOSCE	Reserved
Attribute	R/W			R/W	R/W	-	R/W	-
Initial value	000			0	0	-	0	-

■ Register functions

[bit7:5] RCS[2:0]: Master clock switch control bits

bit7	bit6	bit5	Description
0	0	0	High-speed CR clock [Initial value]
0	0	1	Main clock
0	1	0	Main PLL clock
0	1	1	Setting is prohibited
1	0	0	Low-speed CR clock
1	0	1	Sub clock
1	1	0	Setting is prohibited
1	1	1	Setting is prohibited

[bit4] PLLE: PLL oscillation enable bit

Value	Description
0	Disables PLL oscillation [Initial value]
1	Enables PLL oscillation

[bit3] SOSCE: Sub clock oscillation enable bit

Value	Description
0	Disables sub clock oscillation [Initial value]
1	Enables sub clock oscillation

[bit2] Reserved: Reserved bit

"0" is read from this bit.
Set this bit to "0" when writing.

[bit1] MOSCE: Main clock oscillation enable bit

Value	Description
0	Disables main clock oscillation [Initial value]
1	Enables main clock oscillation

[bit0] Reserved: Reserved bit

"0" is read from this bit.
Set this bit to "0" when writing.

<Notes>

- This register is not initialized by software reset.
- When you change the clock mode, you should set the enable bit to transition for desired clock oscillation. Then, you can change the clock switch control bits (SCM_CTL:RCS[2:0]).
- When RTCE bit (PMD_CTL:RTCE) is "1", it becomes a sub clock oscillation enable state regardless of the SOSCE bit and SORDY bit values.
- Writing "1" to RTCE bit (PMD_CTL:RTCE) is enabled only when SORDY bit is "1".
- RTCE bit (PMD_CTL:RTCE) does not exist in the products that do not have RTC mode and deep standby RTC mode. See Table 1-1 in the Chapter "Low Power Consumption Mode".

5.2. System Clock Mode Status Register (SCM_STR)

The SCM_STR indicates a clock selected for the master clock and a waiting state for clock oscillation stability.

■ Register configuration

bit	7	6	5	4	3	2	1	0
Field	RCM[2:0]			PLRDY	SORDY	Reserved	MORDY	Reserved
Attribute	R			R	R	-	R	-
Initial value	000			0	0	-	0	-

■ Register functions

[bit7:5] RCM[2:0]: Master clock selection bits

bit7	bit6	bit5	Description
0	0	0	High-speed CR clock [Initial value]
0	0	1	Main clock
0	1	0	Main PLL clock
0	1	1	Setting is prohibited
1	0	0	Low-speed CR clock
1	0	1	Sub clock
1	1	0	Setting is prohibited
1	1	1	Setting is prohibited

[bit4] PLRDY: PLL oscillation stable bit

Value	Description
0	In a stabilization wait or an oscillation stop state [Initial value]
1	In a stable state

[bit3] SORDY: Sub clock oscillation stable bit

Value	Description
0	In a stabilization wait or an oscillation stop state [Initial value]
1	In a stable state

[bit2] Reserved: Reserved bit

"0" is read from this bit.

[bit1] MORDY: Main clock oscillation stable bit

Value	Description
0	In a stabilization wait or an oscillation stop state [Initial value]
1	In a stable state

[bit0] Reserved: Reserved bit

"0" is read from this bit.

<Notes>

- This register is not initialized by software reset.
- When RTCE bit (PMD_CTL:RTCE) is "1", it becomes a sub clock oscillation enable state regardless of the SOSCE bit and SORDY bit values.
- Writing "1" to RTCE bit (PMD_CTL:RTCE) is enabled only when SORDY bit is "1".
- RTCE bit (PMD_CTL:RTCE) does not exist in the products that do not have RTC mode and deep standby RTC mode. See Table 1-1 in the Chapter "Low Power Consumption Mode".

5.3. Base Clock Prescaler Register (BSC_PSR)

The BSC_PSR sets the frequency division ratio of the base clock.

■ Register configuration

bit	7	6	5	4	3	2	1	0
Field	Reserved						BSR	
Attribute			-				R/W	
Initial value			-				000	

■ Register functions

[bit7:3] Reserved: Reserved bits

"0b00000" is read from these bits.
Set these bits to "0b00000" when writing.

[bit2:0] BSR: Base clock frequency division ratio setting bits

bit2	bit1	bit0	Description
0	0	0	1/1 [Initial value]
0	0	1	1/2
0	1	0	1/3
0	1	1	1/4
1	0	0	1/6
1	0	1	1/8
1	1	0	1/16
1	1	1	Setting is prohibited

<Note>

This register is not initialized by software reset.

5.4. APB0 Prescaler Register (APBC0_PSR)

The APBC0_PSR sets the APB0 bus clock frequency division.

■ Register configuration

bit	7	6	5	4	3	2	1	0
Field	Reserved						APBC0	
Attribute	-						R/W	
Initial value	-						00	

■ Register functions

[bit7:2] Reserved: Reserved bits

"0b000000" is read from these bits.
Set these bits to "0b000000" when writing.

[bit1:0] APBC0: APB0 bus clock frequency division setting bits

bit1	bit0	Description
0	0	1/1 [Initial value]
0	1	1/2
1	0	1/4
1	1	1/8

<Note>

This register is not initialized by software reset.

5.5. APB1 Prescaler Register (APBC1_PSR)

The APBC1_PSR sets the APB1 bus clock frequency division.

■ Register configuration

bit	7	6	5	4	3	2	1	0
Field	APBC1EN	Reserved		APBC1RST	Reserved		APBC1	
Attribute	R/W	-		R/W	-		R/W	
Initial value	1	-		0	-		00	

■ Register functions

[bit7] APBC1EN: APB1 clock enable bit

Value	Description
0	Disables PCLK1 output
1	Enables PCLK1 output [Initial value]

[bit6:5] Reserved: Reserved bits

"0b00" is read from these bits.
Set these bits to "0b00" when writing.

[bit4] APBC1RST: APB1 bus reset control bit

Value	Description
0	APB1 bus reset, inactive [Initial value]
1	APB1 bus reset, active

[bit3:2] Reserved: Reserved bits

"0b00" is read from these bits.
Set these bits to "0b00" when writing.

[bit1:0] APBC1: APB1 bus clock frequency division setting bits

bit1	bit0	Description
0	0	1/1 [Initial value]
0	1	1/2
1	0	1/4
1	1	1/8

<Note>

This register is not initialized by software reset.

5.6. APB2 Prescaler Register (APBC2_PSR)

The APBC2_PSR sets the APB2 bus clock frequency division.

■ Register configuration

bit	7	6	5	4	3	2	1	0
Field	APBC2EN	Reserved		APBC2RST	Reserved		APBC2	
Attribute	R/W	-		R/W	-		R/W	
Initial value	1	-		0	-		00	

■ Register functions

[bit7] APBC2EN: APB2 clock enable bit

Value	Description
0	Disables PCLK2 output
1	Enables PCLK2 output [Initial value]

[bit6:5] Reserved: Reserved bits

"0b00" is read from these bits.
Set these bits to "0b00" when writing.

[bit4] APBC2RST: APB2 bus reset control bit

Value	Description
0	APB2 bus reset, inactive [Initial value]
1	APB2 bus reset, active

[bit3:2] Reserved: Reserved bits

"0b00" is read from these bits.
Set these bits to "0b00" when writing.

[bit1:0] APBC2: APB2 bus clock frequency division setting bits

bit1	bit0	Description
0	0	1/1 [Initial value]
0	1	1/2
1	0	1/4
1	1	1/8

<Note>
This register is not initialized by software reset.

5.7. Software Watchdog Clock Prescaler Register (SWC_PSR)

The SWC_PSR sets the frequency division and enables the output of the software watchdog clock.

■ Register configuration

bit	7	6	5	4	3	2	1	0
Field	TESTB	Reserved					SWDS	
Attribute	R/W	-					R/W	
Initial value	X	-					00	

■ Register functions

[bit7] TESTB: TEST bit

Value	Description
0	Setting is prohibited
1	Always written by "1"

Note: The read value of this bit is undefined.

[bit6:2] Reserved: Reserved bits

"0b00000" is read from these bits.
Set these bits to "0b00000" when writing.

[bit1:0] SWDS: Software watchdog clock frequency division ratio setting bits

bit1	bit0	Description
0	0	Sets 1/1 frequency of PCLK0. [Initial value]
0	1	Sets 1/2 frequency of PCLK0.
1	0	Sets 1/4 frequency of PCLK0.
1	1	Sets 1/8 frequency of PCLK0.

<Notes>

- This register is not initialized by software reset.
- Be sure to set the TESTB bit to "1" when writing a value to this register.

5.8. Trace Clock Prescaler Register (TTC_PSR)

The TTC_PSR sets the trace clock frequency division.

■ Register configuration

bit	7	6	5	4	3	2	1	0
Field	Reserved						TTC	
Attribute	-						R/W	
Initial value	-						00	

■ Register functions

[bit7:2] Reserved: Reserved bits

"0b000000" is read from this bit.
Set these bits to "0b000000" when writing.

[bit1:0] TTC: Trace clock divide ratio setting bits

bit1	bit0	Description
0	0	1/1 [Initial value]
0	1	1/2
1	0	1/4
1	1	1/8

<Note>

This register is not initialized by software reset.
Only 1 division or 2 divisions can be set for TYPE0 and TYPE1 products.

5.9. Clock Stabilization Wait Time Register (CSW_TMR)

The CSW_TMR sets the stabilization wait time of the main/sub clock.

■ Register configuration

bit	7	6	5	4	3	2	1	0
Field	Reserved	SOWT			MOWT			
Attribute	-	R/W			R/W			
Initial value	-	000			0000			

■ Register functions

[bit7] Reserved: Reserved bit

"0b0" is read from this bit.
Set this bit to "0b0" when writing.

[bit6:4] SOWT: Sub clock stabilization wait time setup bits

bit6	bit5	bit4	Description
0	0	0	$2^{10}/F_{CRL}$: Approx. 10.3 ms * [Initial value]
0	0	1	$2^{11}/F_{CRL}$: Approx. 20.5 ms *
0	1	0	$2^{12}/F_{CRL}$: Approx. 41 ms *
0	1	1	$2^{13}/F_{CRL}$: Approx. 82 ms *
1	0	0	$2^{14}/F_{CRL}$: Approx. 164 ms *
1	0	1	$2^{15}/F_{CRL}$: Approx. 327 ms *
1	1	0	$2^{16}/F_{CRL}$: Approx. 655 ms *
1	1	1	$2^{17}/F_{CRL}$: Approx. 1.31 s *

*: When F_{CRL}=100 kHz

[bit3:0] MOWT: Main clock stabilization wait time setup bits

bit3	bit2	bit1	bit0	Description
0	0	0	0	$2^{1}/F_{CRH}$: Approx. 500 ns * [Initial value]
0	0	0	1	$2^{5}/F_{CRH}$: Approx. 8 µs *
0	0	1	0	$2^{6}/F_{CRH}$: Approx. 16 µs *
0	0	1	1	$2^{7}/F_{CRH}$: Approx. 32 µs *
0	1	0	0	$2^{8}/F_{CRH}$: Approx. 64 µs *
0	1	0	1	$2^{9}/F_{CRH}$: Approx. 128 µs *
0	1	1	0	$2^{10}/F_{CRH}$: Approx. 256 µs *
0	1	1	1	$2^{11}/F_{CRH}$: Approx. 512 µs *
1	0	0	0	$2^{12}/F_{CRH}$: Approx. 1.0 ms *
1	0	0	1	$2^{13}/F_{CRH}$: Approx. 2.0 ms *
1	0	1	0	$2^{14}/F_{CRH}$: Approx. 4.0 ms *
1	0	1	1	$2^{15}/F_{CRH}$: Approx. 8.0 ms *
1	1	0	0	$2^{17}/F_{CRH}$: Approx. 33.0 ms *
1	1	0	1	$2^{19}/F_{CRH}$: Approx. 131 ms *
1	1	1	0	$2^{21}/F_{CRH}$: Approx. 524 ms *
1	1	1	1	$2^{23}/F_{CRH}$: Approx. 2.0 s *

*: When F_{CRH}=4 MHz

<Notes>

- Set each oscillation stabilization wait time before enabling each oscillation enable bit (SOSCE, MOSCE) of the SCM_CTL register.
  If you change MOWT or SOWT bit while waiting for oscillation stability of each oscillator, each oscillation stabilization wait time is not guaranteed.
- This register is not initialized by software reset.

5.10. PLL Clock Stabilization Wait Time Setup Register (PSW_TMR)

The PSW_TMR sets the main PLL clock stabilization wait time.

■ Register configuration

bit	7	6	5	4	3	2	1	0
Field	Reserved			PINC	Reserved	POWT		
Attribute	-			R/W	-	R/W		
Initial value	-			0	-	000		

■ Register functions

[bit7:5] Reserved: Reserved bits

"0b000" is read from these bits.
Set these bits to "0b000" when writing.

[bit4] PINC: PLL input clock select bit

Value	Description
0	Selects CLKMO (main clock oscillation) [Initial value]
1	Selects CLKHC (high-speed CR clock)

Note: Setting this bit to "1" has some restrictions.
See "1. Notes when high-speed CR is used for the master clock"in "B. List of Notes".

[bit3] Reserved: Reserved bit

"0" is read from this bit.
Set this bit to "0" when writing.

[bit2:0] POWT: Main PLL clock stabilization wait time setup bits

bit2	bit1	bit0	Description
0	0	0	$2^9/F_{CRH}$: Approx. 128 µs * [Initial value]
0	0	1	$2^{10}/F_{CRH}$: Approx. 256 µs *
0	1	0	$2^{11}/F_{CRH}$: Approx. 512 µs *
0	1	1	$2^{12}/F_{CRH}$: Approx. 1.02 ms *
1	0	0	$2^{13}/F_{CRH}$: Approx. 2.05 ms *
1	0	1	$2^{14}/F_{CRH}$: Approx. 4.10 ms *
1	1	0	$2^{15}/F_{CRH}$: Approx. 8.20 ms *
1	1	1	$2^{16}/F_{CRH}$: Approx. 16.40 ms *

*: When F_{CRH}=4 MHz

<Notes>

- Set each oscillation stabilization wait time before enabling the PLL oscillation enable bit (PLLE) of the SCM_CTL. If you change POWT bit while waiting for oscillation stability of the PLL oscillator, the oscillation stabilization wait time is not guaranteed.
- This register is not initialized by software reset.

5.11. PLL Control Register 1 (PLL_CTL1)

The PLL_CTL1 sets the PLL frequency division ratio.

■ Register configuration

bit	7	6	5	4	3	2	1	0
Field	PLLK				PLLM			
Attribute	R/W				R/W			
Initial value	0000				0000			

■ Register functions

[bit7:4] PLLK: PLL input clock frequency division ratio setting bits

bit 7:4	Description
0000	The frequency division is (PLLK value +1). (Frequency division : 1 to 16) Example: PLLK value (0000) +1 => 1/1 frequency [Initial value]
0001	
•	
•	
1111	

[bit3:0] PLLM: PLL VCO clock frequency division ratio setting bits

bit3:0	Description
0000	The frequency division is (PLLM value +1). (Frequency division : 1 to 16) Example: PLLM value (0000) +1 => 1/1 frequency [Initial value]
0001	
•	
•	
1111	

<Notes>

- Set each frequency division ratio before enabling the PLL oscillation enable bit (PLLE) of the SCM_CTL register.
- This register is not initialized by software reset.

5.12. PLL Control Register 2 (PLL_CTL2)

The PLL_CTL2 sets the PLL frequency division ratio.

■ TYPE0 products

● Register configuration

bit	7	6	5	4	3	2	1	0
Field	Reserved			PLLN				
Attribute	-			R/W				
Initial value	-			00000				

● Register functions

[bit7:5] Reserved: Reserved bits

"0b000" is read from these bits.
Set these bits to "0b000" when writing.

[bit4:0] PLLN: PLL feedback frequency division ratio setting bits

bit4:0	Description
00000	The frequency division is (PLLN value +1). (Frequency division : 1 to 32) Example: PLLN value (00000) +1 => 1/1 division [Initial value]
00001	
.	
.	
11111	

<Notes>

- Set the frequency division ratio before enabling the PLL oscillation enable bit (PLLE) of the SCM_CTL register.
- This register is not initialized by software reset.

■ Products other than TYPE0

● Register configuration

bit	7	6	5	4	3	2	1	0
Field	Reserved		PLLN					
Attribute	-		R/W					
Initial value	-		000000					

● Register functions

[bit7:6] Reserved: Reserved bits

"0b00" is read from these bits.
Set these bits to "0b00" when writing.

[bit5:0] PLLN: PLL feedback frequency division ratio setting bits

bit5:0	Description
000000	The frequency division is (PLLN value +1). (Frequency division : 1 to 50) Example: PLLN value (000000) +1 => 1/1 division [Initial value]
000001	
.	
.	
110001	
110010	Setting is prohibited
.	
111111	

<Notes>

- Set the frequency division ratio before enabling the PLL oscillation enable bit (PLLE) of the SCM_CTL register.
- This register is not initialized by software reset.

5.13. Debug Break Watchdog Timer Control Register (DBWDT_CTL)

The DBWDT_CTL sets the watchdog timer count operation for debug mode tool break.

■ Register configuration

bit	7	6	5	4	3	2	1	0
Field	DPHWBE	Reserved	DPSWBE	Reserved				
Attribute	R/W	-	R/W	-				
Initial value	0	0	0	-				

■ Register functions

[bit7] DPHWBE: HW-WDG debug mode break bit

Value	Description
0	HW-WDG stops counting at the tool break [Initial value]
1	HW-WDG continues counting at the tool break

[bit6] Reserved: Reserved bit

"0" is read from this bit.
Set this bit to "0" when writing.

[bit5] DPSWBE: SW-WDG debug mode break bit

Value	Description
0	SW-WDG stops counting at the tool break [Initial value]
1	SW-WDG continues counting at the tool break

[bit4:0] Reserved: Reserved bits

"0b00000" is read from these bits.
Set these bits to "0b00000" when writing.

<Note>

This register is not initialized by software reset.

5.14. Interrupt Enable Register (INT_ENR)

The INT_ENR enables/disables interrupts.

■ Register configuration

bit	7	6	5	4	3	2	1	0
Field	Reserved		FCSE	Reserved		PCSE	SCSE	MCSE
Attribute	-		R/W	-		R/W	R/W	R/W
Initial value	-		0	-		0	0	0

■ Register functions

[bit7:6] Reserved: Reserved bits

"0b00" is read from these bits.
Set these bits to "0b00" when writing.

[bit5] FCSE: Anomalous frequency detection interrupt enable bit

Value	Description
0	Disables FCS interrupts
1	Enables FCS interrupts

[bit4:3] Reserved: Reserved bits

"0b00" is read from these bits.
Set these bits to "0b00" when writing.

[bit2] PCSE: PLL oscillation stabilization wait completion interrupt enable bit

Value	Description
0	Disables PLL oscillation stabilization wait completion interrupts
1	Enables PLL oscillation stabilization wait completion interrupts

[bit1] SCSE: Sub clock oscillation stabilization wait completion interrupt enable bit

Value	Description
0	Disables sub clock oscillation stabilization wait completion interrupts
1	Enables sub clock oscillation stabilization wait completion interrupts

[bit0] MCSE: Main clock oscillation stabilization wait completion interrupt enable bit

Value	Description
0	Disables main clock oscillation stabilization wait completion interrupts
1	Enables main clock oscillation stabilization wait completion interrupts

<Note>

For "Anomalous frequency detection", see Chapter "Clock supervisor".

5.15. Interrupt Status Register (INT_STR)

The INT_STR indicates the status of interrupts.

■ Register configuration

bit	7	6	5	4	3	2	1	0
Field	Reserved		FCSI	Reserved		PCSI	SCSI	MCSI
Attribute	-		R	-		R	R	R
Initial value	-		0	-		0	0	0

■ Register functions

[bit7:6] Reserved: Reserved bits

"0b00" is read from these bits.
Set these bits to "0b00" when writing.

[bit5] FCSI: Anomalous frequency detection interrupt status bit

Value	Description
0	No FCS interrupt has been asserted.
1	An FCS interrupt has been asserted.

[bit4:3] Reserved: Reserved bits

"0b00" is read from these bits.
Set these bits to "0b00" when writing.

[bit2] PCSI: PLL oscillation stabilization wait completion interrupt status bit

Value	Description
0	No PLL oscillation stabilization wait completion interrupt has been asserted.
1	A PLL oscillation stabilization wait completion interrupt has been asserted.

[bit1] SCSI: Sub clock oscillation stabilization wait completion interrupt status bit

Value	Description
0	No sub clock oscillation stabilization wait completion interrupt has been asserted.
1	A sub clock oscillation stabilization wait completion interrupt has been asserted.

[bit0] MCSI: Main clock oscillation stabilization wait completion interrupt status bit

Value	Description
0	No main clock oscillation stabilization wait completion interrupt has been asserted.
1	A main clock oscillation stabilization wait completion interrupt has been asserted.

5.16. Interrupt Clear Register (INT_CLR)

The INT_CLR clears interrupt factors.

■ Register configuration

bit	7	6	5	4	3	2	1	0
Field	Reserved		FCSC	Reserved		PCSC	SCSC	MCSC
Attribute	-		W	-		W	W	W
Initial value	-		0	-		0	0	0

■ Register functions

[bit7:6] Reserved: Reserved bits

"0b00" is read from these bits.
Set these bits to "0b00" when writing.

[bit5] FCSC: Anomalous frequency detection interrupt factor clear bit

Process	Description
When 0 is written	The FCS interrupt factor is not affected by the written value.
When 1 is written	Clears the FCS interrupt factor.
When read	The fixed value "0" is read.

[bit4:3] Reserved: Reserved bits

"0b00" is read from these bits.
Set these bits to "0b00" when writing.

[bit2] PCSC: PLL oscillation stabilization wait completion interrupt factor clear bit

Process	Description
When 0 is written	The PLL oscillation stabilization wait completion interrupt factor is not affected by the written value.
When 1 is written	Clears the PLL oscillation stabilization wait completion interrupt factor.
When read	The fixed value "0" is read.

[bit1] SCSC: Sub clock oscillation stabilization wait completion interrupt factor clear bit

Process	Description
When 0 is written	The sub clock oscillation stabilization wait completion interrupt factor is not affected by the written value.
When 1 is written	Clears the sub clock oscillation stabilization wait completion interrupt factor.
When read	The fixed value "0" is read.

[bit0] MCSC: Main clock oscillation stabilization wait completion interrupt factor clear bit

Process	Description
When 0 is written	The main clock oscillation stabilization wait completion interrupt factor is not affected by the written value.
When 1 is written	Clears the main clock oscillation stabilization wait completion interrupt factor.
When read	The fixed value "0" is read.

<Note>

When this register is cleared, each interrupt status bit (FCSI, PCSI, SCSI, MCSI) of the INT_STR register is also cleared.

6. Clock Generation Unit Usage Precautions

This section explains the precautions for using the clock generation unit.

- The oscillation stabilization wait time of main clock and sub clock oscillators
  Because the stabilization wait time of main clock/sub clock oscillator depends on the oscillator type (crystal, ceramic, etc.), the oscillation stabilization wait time suitable for the oscillator type must be selected.
- Changing the frequency division under stabilized PLL oscillation
  When the PLL frequency division ratio is changed after stabilization of PLL oscillation, stop the PLL oscillation once, change the frequency division ratio, and then re-enable the PLL oscillation.
- Peripherals independent of clock control by the clock generation unit
  The following peripherals run independently of clock control by the clock generation unit.
  For information about how to handle each operating clock, see the following chapter.
  - USB operating clock generation unit: See Chapter "USB Clock Generation" in "Communication Macro Part".
  - Clock supervisor: See Chapter "Clock supervisor".
  - Watchdog timer: See Chapter "Watchdog Timer" in "Timer Part".
  - Watch counter: See Chapter "Watch Counter" in "Timer Part".
  - Real-time cloc: See Chapter "REAL-TIME CLOCK" in "Timer Part".
  - CAN prescaler: See Chapter "CAN Prescaler" in "Communication Macro Part".
- Setting the oscillation stabilization wait time
  Set the oscillation stabilization wait time of the main clock, sub clock, and PLL oscillators with relevant oscillation stabilization wait time setup registers, and then enable each oscillator.
  Do not change the oscillation stabilization wait time while waiting for oscillation to stabilize.
- Checking main clock oscillation while using the main PLL clock
  It is prohibited to stop main clock oscillation while using PLL oscillation.
- Switching clock modes
  Clock modes can be switched by changing the RCS[2:0] bits of the SCM_CTL register.
  To switch clock modes, take the following steps:
  1. Set the oscillation stabilization wait time of each oscillator.
  2. Set the oscillation enable bit of the desired clock (SCM_CTL:xxxE) to "1".
  3. Check the oscillation stable bit of the desired clock (SCM_CTL:xxxRDY) to "1".
  4. Switch SCM_CTL:RCS[2:0].
  5. Wait until SCM_STR:RCM[2:0] = SCM_CTL:RCS[2:0].
- Correlation between the clock mode switching and the oscillation stable bit
  The timings when the oscillation stable bit (SCM_STR:xxxRDY) turns to "1" vary for the following clock mode switching.
  - When switching from the high-speed CR run, main run, or PLL run to another clock mode:
    Setting SCM_CTL:xxxE to "1" can start the oscillation stabilization wait time. You can check that SCM_STR:xxxRDY is "1" after the oscillation stabilization wait time has elapsed.
  - When switching from the low-speed CR run or sub run to the high-speed CR run, main run, or PLL run:
    Even if SCM_CTL:MOSCE (or PLLE) set to 1, oscillation of main clock does not start. To start the main clock (or high-speed CR or PLL) oscillation stabilization wait time, SCM_CTL:RCS [2:0] must be switched after setting SCM_CTL:MOSCE (or PLLE) to 1. After the oscillation stabilization wait time has elapsed, you can check that SCM_STR:xxxRDY is "1".

- If the standby mode is released by an interrupt, the device restarts in the clock mode that indicated by the RCS[2:0] bits in the SCM_CTL register.
- If any reset occurs other than software resets, the high-speed CR clock (CLKHC) is set as a master clock. High-speed CR clock mode is set as clock mode.
- If any reset other than software resets is executed, the main clock and sub clock oscillators, and PLL oscillation stop. If you want to use those oscillators again after the reset, enable them using the SCM_CTL register.
- For the correlation between each clock mode and start/stop of the oscillator, see Chapter "Low Power Consumption Mode".

CHAPTER 2-2: High-Speed CR Trimming

This chapter explains the High-Speed CR Trimming Function.

1. High-Speed CR Trimming Function Overview
2. High-Speed CR Trimming Function Configuration and Block Diagram
3. High-Speed CR Trimming Function Operation
4. High-Speed CR Trimming Function Setup Procedure Example
5. High-Speed CR Trimming Function Register List
6. High-Speed CR Trimming Function Usage Precautions

1. High-Speed CR Trimming Function Overview

This section explains frequency trimming function of the high-speed CR oscillator.

The high-speed CR oscillators used for this device have fluctuation range in frequency accuracy due to process variation. The offset adjustment of frequency and the frequency fluctuation due to temperature can be reduced by configuring the trimming function.

The high-speed CR trimming function consists of the frequency trimming unit and temperature trimming unit.

The frequency trimming setup has the following functions:

- The frequency offset of the high-speed CR trimming can be adjusted by writing a trimming value to the High-speed CR oscillation Frequency Trimming Register (MCR_FTRM).
- It can be calculated the value set to the High-speed CR oscillation Frequency Trimming Register from the count value within a certain period by using input capture or base timer.Depending on the product TYPE to be used, you can use either one of input capture or base timer. For details, refer to Table 1-1.

Table 1-1 Register list

Products TYPE	Usable Timer	
	Multi-function timer (Input capture ch.3)	Base timer ch.0
TYPE0 to TYPE5, TYPE7	Available	Not Available
TYPE6, TYPE8	Not Available	Available
TYPE9 to TYPE12	Available	Available

The temperature trimming setup has the following functions:

- The frequency adjustment of the high-speed CR can be implemented by writing the trimming value to High-speed CR oscilation Temperature Trimming Register(MCR_TTRM.
  For the product TYPEs supporting frequency adjustment for temperature, see Table 1-2.

Table 1-2 Temperature Function Supporting Products

ProductTYPE	Frequency Adjustment for Temperature
TYPE0 to TYPE7	Not Available
TYPE8 to TYPE12	Available

For the high-speed CR frequency accuracy, see electrical characteristics described in "Data Sheet" of the product used.

2. High-Speed CR Trimming Function Configuration and Block Diagram

This section explains the configuration and block diagram of high-speed CR oscillator trimming function.

Figure 2-1 shows the block diagram of high-speed CR trimming function.

Figure 2-1 Block diagram of the High-speed CR Oscillator Timing Circuit

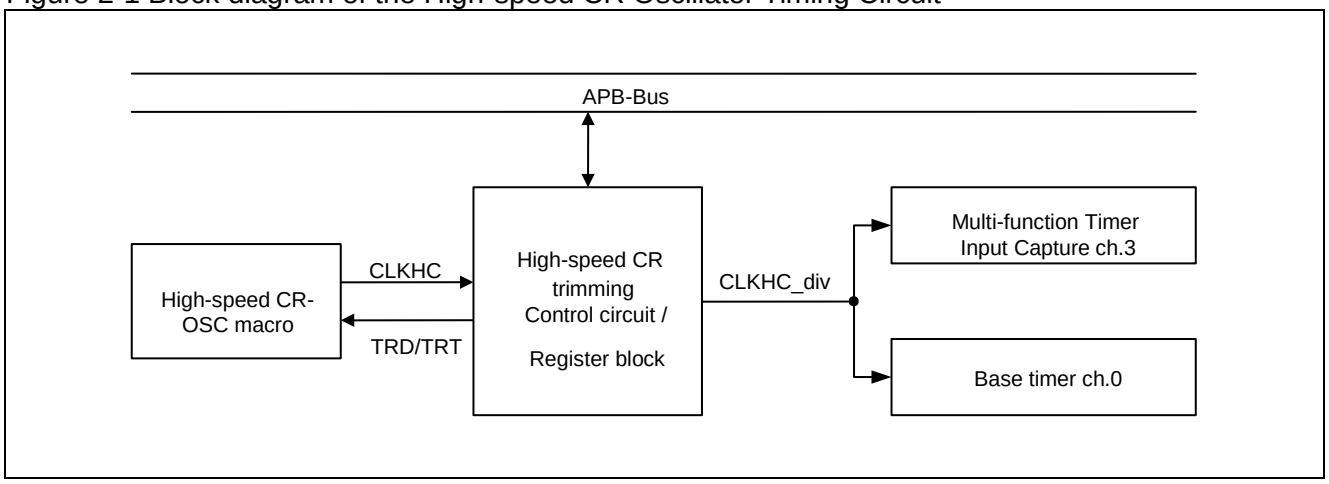

■ Configuration

● High-speed CR OSC macro

A macro of the high-speed CR clock outputs CLKHC (high-speed CR clock).
In addition, the trimming can be performed with TRD bit of high-speed CR oscillation frequency trimming register (MCR_FTRM) and TRT bit of high-speed CR oscillation temperature trimming register(MCR_TTRM).

● High-speed CR Trimming Control Circuit and register block

A control circuit and registers for trimming high-speed CR.
In addition, the high-speed CR clock (CLKHC_div) divided by the ratio set with CSR bit of high-speed CR oscillation frequency division setup register (MCR_PSR) is output to the Multi-function timer (input capture ch.3) / base timer ch.0.

● Multi-function timer input capture/Base timer

This block counts frequency before setting to calculate the frequency trimming data for high-speed CR.

<Note>

For the clock definition, see Chapter "Clock".

3. High-Speed CR Trimming Function Operation

This section explains operation conducted by trimming function of the high-speed CR oscillator.

■ Operation of high-speed CR oscillation trimming function

● Frequency trimming setup

The setup process writes a trimming data value to the High-speed CR oscillation Frequency Trimming Register (MCR_FTRM) to correct the misalignment of high-speed CR clock accuracy caused by process variation.

● Temperature trimming setup

The setup process writes a trimming data value to the High-speed CR oscillation Temperature Trimming Register (MCR_TTRM) to correct the misalignment of high-speed CR clock accuracy caused by temperature fluctuation.

● Register lock function

Write protect function is provided for the High-speed CR oscillation Frequency Trimming Register (MCR_FTRM) and High-speed CR oscillation Temperature Trimming Register (MCR_TTRM).
This function protects the register from being rewritten without authorization when the system runs out of control.

● Trimming data acquisition

Data written to the High-speed CR oscillation Frequency Trimming Register (MCR_FTRM) can be acquired by one of the following three methods:

- Use the factory preset value stored in the "CR trimming" area inside the flash memory.
  The value of CR trimming area of flash memory is stored in the CR trimming data mirror register (CRTRMM) after reset release. For the data value written to the frequency trimming setting register (MCR_FTRM), use the TRMM bit of CR trimming data mirror register (CRTRMM).
- Calculate by yourself the value set to the High-speed CR oscillation Frequency Trimming Register from the count value within a certain period by using input capture or base timer.
- Output high-speed CR clock to an external pin, monitor the waveform to trim the frequency and calculate by yourself the value set to the High-speed CR oscillation Frequency Trimming Register.

For the data value written to High-speed CR oscillation Temperature Trimming Register (MCR_TTRM), get by the following method.

- Use the factory preset value stored in the "CR trimming" area inside the flash memory.
  The value of CR trimming area of flash memory is stored in the CR trimming data mirror register (CRTRMM) after reset release. For the data value written to the temperture trimming setting register (MCR_TTRM), use the TTRMM bit of CR trimming data mirror register (CRTRMM).

<Notes>

- Erasing the flash memory also erases the "CR trimming" area inside the memory at the same time. If you use a value in the "CR trimming" area, therefore, save the data to other area (such as RAM) before erasing the flash memory, or only erase sectors other than in the "CR trimming" area.
- For the address of the "CR trimming" area and the CR trimming data mirror register (CRTRMM), see "Flsh Programming Manual" of the product used.

4. High-Speed CR Trimming Function Setup Procedure Example

This section provides an example of setting up trimming function of the high-speed CR oscillator.

■ Trimming setup

For products not supporting temperature adjustment function, take the steps shown in Figure 4-1 to set up frequency trimming. For products supporting temperature adjustment function, take the steps in Figure 4-2.
For products supporting temperature adjustment, see Table 1-2.

■ Trimming setup for priducts not supporting temperature adjustment

1. Write "0x1ACCE554" to the TRMLCK[31:0] bits to unlock the MCR_FTRM Register.
2. Set the TRD bits of MCR_FTRM Register.
3. Write a value other than "0x1ACCE554" to the TRMLCK[31:0] bits to lock the MCR_FTRM Register.

Figure 4-1 Frequency trimming data setup

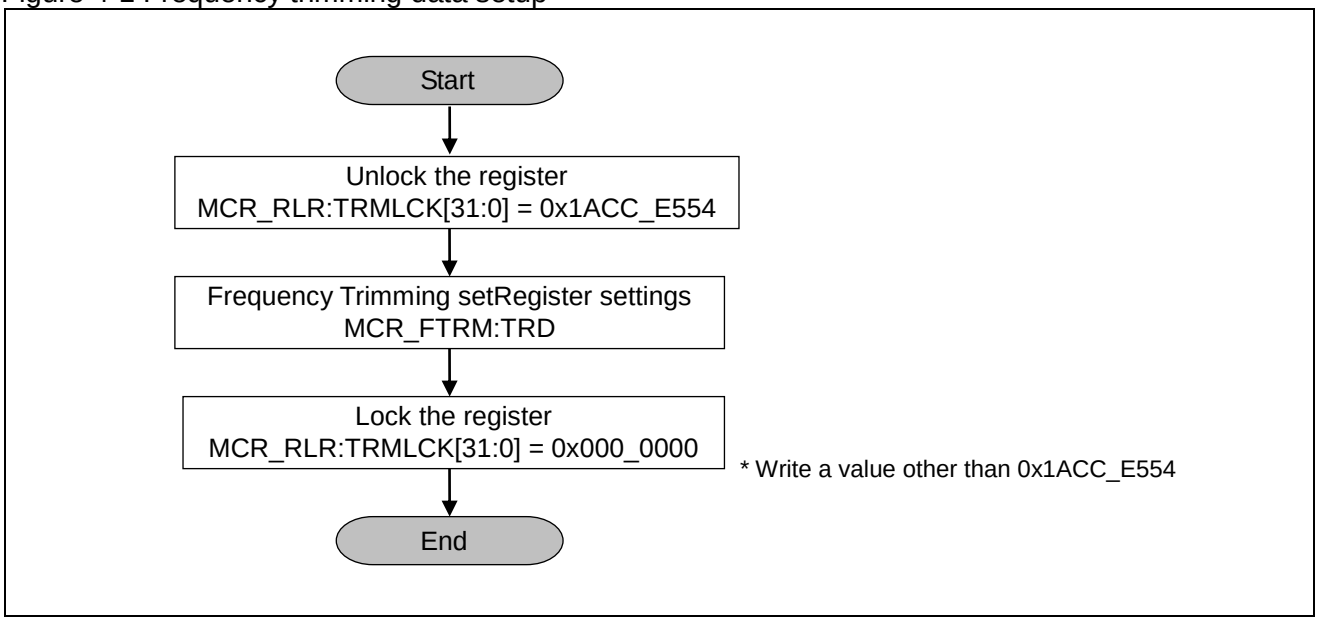

■ Trimming setup for priducts supporting temperature adjustment

1. Write "0x1ACCE554" to the TRMLCK[31:0] bits of High-spped CR Oscillation Register Write Protection Register (MCR_RLR) to unlock Frequency Trimming Setting Regsiter (MCR_FTRM)/ Temperature Trimming Setting Register(MCR_TTRM).
2. Set the trimming data to the TRT bits of Temperature Trimming Setting Register(MCR_TTRM).
3. Set the TRD bits of Frequency Trimming Setting Regsiter (MCR_FTRM)
4. Write a value other than "0x1ACCE554" to the TRMLCK[31:0] bits of High-spped CR Oscillation Register Write Protection Register (MCR_RLR) to lock the Frequency Trimming Setting Regsiter (MCR_FTRM) and Temperature Trimming Setting Register(MCR_TTRM).

Figure 4-2 Frequency and Temperature Trimming Data Setup

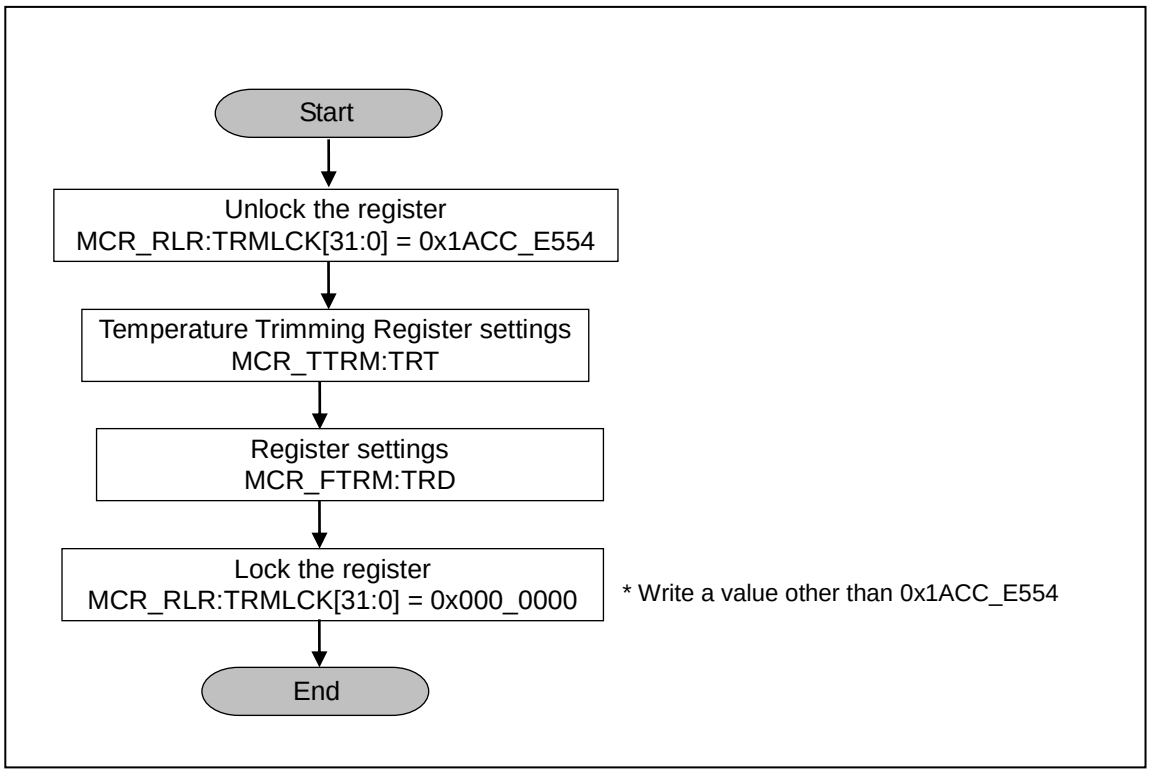

■ Frequency trimming data acquisition example

When acquiring the data from the "CR trimming" area in the flash memory;

- Read the TRMM bit of CR trimming data mirror register (CRTRMM) and get the data.
  Write the acquired value to TRD bit of the High-speed CR oscillation Frequency Trimming Register (MCR_FTRM).

■ How to calculate the frequency trimming data

The following explains how to calculate the trimming data of high-speed CR oscillation.

● When input capture is used

1. Let Ytgt, a target oscillation frequency be 4[MHz]. Let Xtrm be the TRD value at the time.
2. Let Xtrmmin be the "initial value of the TRD bit - 20%" value. Let Ymin[Hz] be the frequency at this time.
3. Let Xtrmmax be the "initial value of the TRD bits + 20%" value. Let Ymax[Hz] be the frequency at this time.
4. The following expressions give TRD set value Xtrm, amounting to target oscillation frequency Ytgt.

$$(\text{Tilt})\ K = \frac{Ymax - Ymin}{Xtrmmax - Xtrmmin}$$

$$(\text{TRD set value})Xtrm = \frac{Ytgt - Ymin}{K} + Xtrmmin$$

Example: TYPE1, TYPE2, TYPE4, TYPE5 products

When Ytgt = 4 MHz, Ymax=4.8 MHz, Ymin=3.2 MHz, Xtrmmax=150 and Xtrmmin=100, the value Xtrm becomes as follows:

$$K = \frac{4.8M - 3.2M}{150 - 100} = 32000$$

$$Xtrm = \frac{4.0M - 3.2M}{32000} + 100 = 125$$

Figure 4-3 Method to trim high-speed CR oscillation

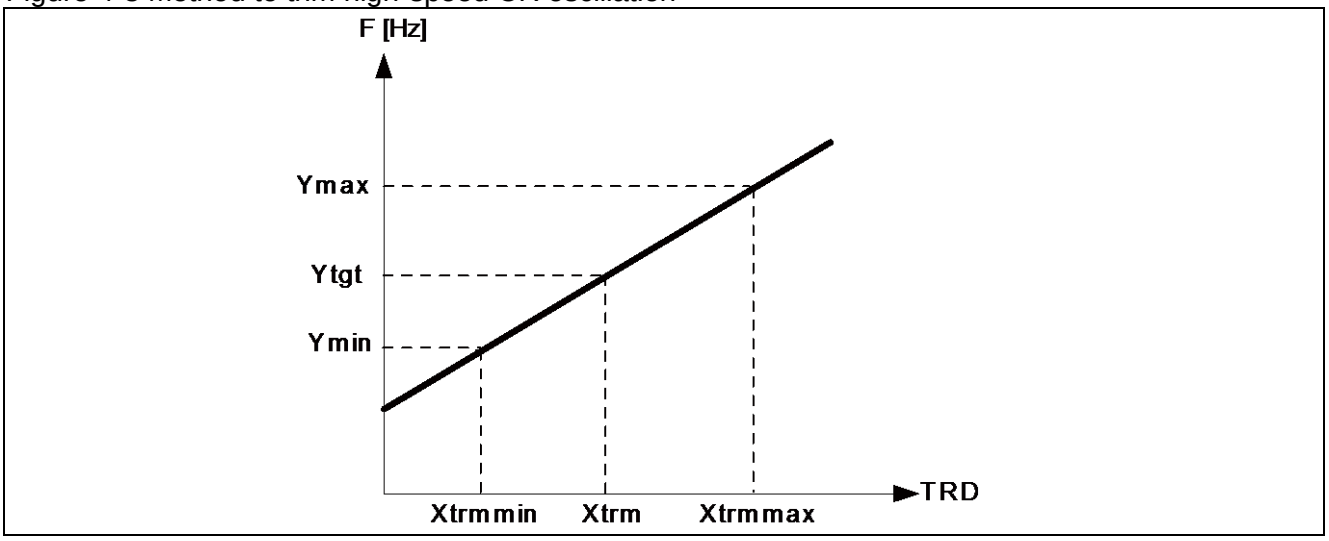

<Note>

For information about how to measure Ymin and Ymax, see "■Example of frequency trimming data acquisition using input capture".

When base timer is used

1. Let Ftgt, a target oscillation frequency be 4 MHz and let Ttgt, the frequency be 250[ns](Ftgt=4[MHz]). Let the TRD[9:5] bits value of high-speed CR oscillation frequency trimming register be Xtrm_coarse, let the TRD[4:0] bits value be Xtrm_fine and let the TRD[9:0] bits value be Xtrm at the time.
2. Set 0b00000 to the TRD[4:0] bits.
3. Let the value when 0b00000 is set to the TRD[9:5] bits be Xtrmmin_coarse. Let the frequency be Tmax_coarse [sec] at the time.
4. Let the value when 0b11111 is set to the TRD[9:5] bits be Xtrmmax_coarse. Let the frequency be Tmin_coarse [sec] at the time.
5. The following expressions give TRD[9:5] sets value Xtrm_coarse, amounting to target oscillation frequency Ttgt or higher.

$$Xtrm_coarse = \frac{Ttgt - \frac{T\max_coarse - T\min_corse}{31} - T\max_coarse}{\frac{T\min_coarse - T\max_coarse}{31}}$$

* Decimals are rounded off.

6. Set the given Xtrm_coarse to TRD[9:5] bits.
7. Check whether the high-speed CR clock F_{CRH} is not greater than Ftgt after setting TRD bit. If it is greater than Ftgt, subtract 1 from Xtrm_coarse and return to step 6. If it is not greater than Ftgt, go to step 8.
8. Let the value when 0b00000 is set to the TRD[4:0] bits be Xtrmmin_fine. Let the frequency be Tmax_fine [sec] at the time.
9. Let the value when 0b11111 is set to the TRD[4:0] bits be Xtrmmax_fine. Let the frequency be Tmin_fine [sec] at the time. In addition,
10. The following expressions give TRD[4:0] set value Xtrm_fine, amounting to target oscillation frequency Ttgt.

$$Xtrm_fine = \frac{Ttgt - \frac{T\max_fine - T\min_fine}{31} - T\max_fine}{\frac{T\min_fine - T\max_fine}{31}}$$

* Decimals are rounded up.

11. Set the given Xtrm_fine to TRD[4:0] bits.
12. Check whether the high-speed CR clock F_{CRH} is not less than Ftgt after setting TRD bit, and also whether it is within the standard of the oscillation frequency of the high-speed CR clock. If F_{CRH} is greater than the standard, subtract 1 from Xtrm_fine and return to step 11. Also, if F_{CRH} is less than Ftgt, add 1 to Xtrm_fine and return to step 11. If it is within the standard, the calculation of trimming data is complete.

<Note>

For details of the standard value of the high-speed CR clock oscillation frequency, see "Data Sheet" for the product used.

Figure 4-4 Method to trim high-speed CR oscillation

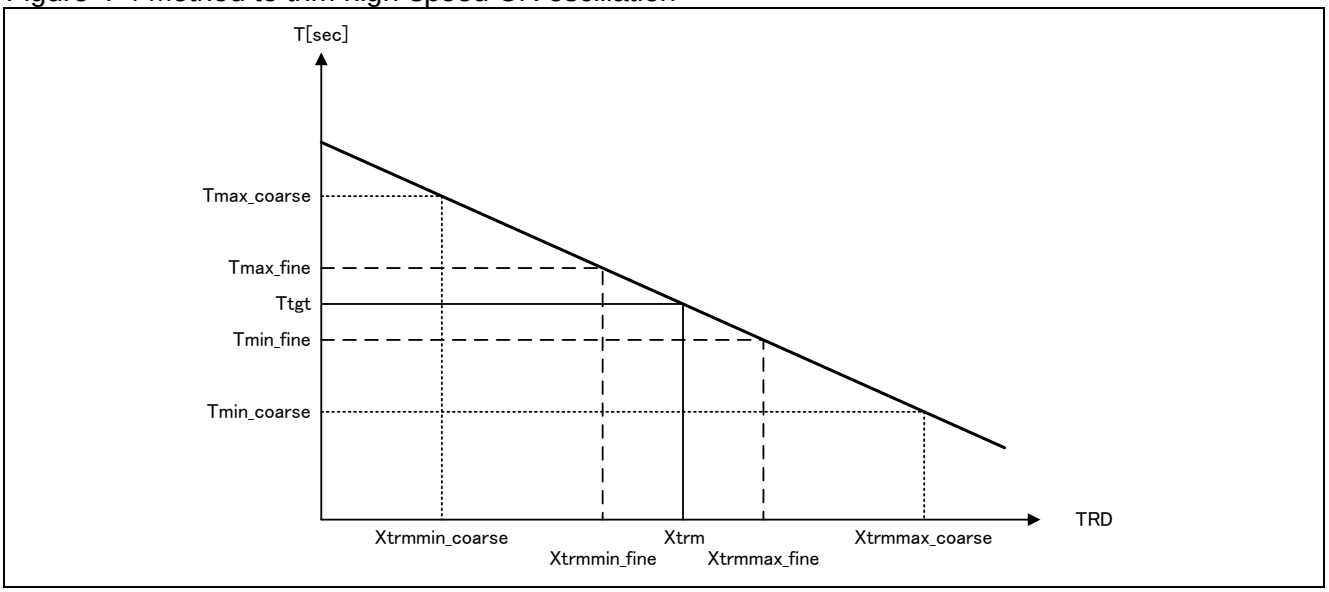

<Note>

For information about how to measure Tmin_coarse/fine and Tmax_coarse/fine, see "■ Example of trimming data acquisition using base timer".

■ Example of frequency trimming data acquisition using input capture

Figure 4-5 shows the time chart of high-speed CR oscillation frequency trimming process.

Figure 4-5 Time chart of high-speed CR oscillation frequency and the trimming process

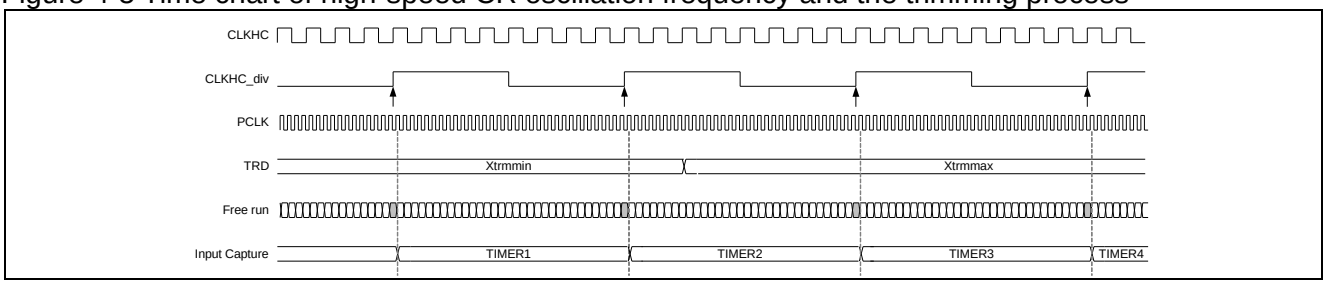

Run the free run timer by setting the main oscillation clock (CLKMO) or the main PLL clock (using main clock for input clock) as the master clock (measurement reference clock).
Clear the free run timer once before measurement (to avoid overflow).
Activate a trigger on the rising of the high-speed CR frequency division clock (CLKHC_div) when setting Xtrmmin or Xtrmmax, read the input capture timer value at that time, and perform the following calculations.

$$Ymin = \frac{DIV}{(TIMER2 - TIMER1) \times PCLK}$$

$$Ymax = \frac{DIV}{(TIMER4 - TIMER3) \times PCLK}$$

- TIMER1, TIMER2 : Input capture timer value at Ymin
- TIMER3, TIMER4 : Input capture timer value at Ymax
- PCLK : Cycle when main oscillation is selected for the master clock
- DIV : Frequency division ratio (CSR setting value)
- CLKHC_div : Division clock for the high-speed CR oscillation clock (CLKHC)

Example: When PCLK = 40 MHz (25 ns), frequency division ratio = 1/8, and TIMER2 - TIMER1 = 100,

$$Ymin = \frac{8}{(100 \times 25\ sec) \times 10^{-9}} \cong 3.2\ MHz$$

<Note>

The input capture which can be used for frequency trimming is ICU ch.3 of the multi-function timer Unit0.
PCLK in Figure 4-5 is an APB1 bus clock.
Select the main clock (CLKMO) or main PLL clock (using the main clock for input clock) to the master clock.

■ Example of trimming data acquisition using base timer

Figure 4-6 shows the time chart of high-speed CR oscillation and the trimming process.

Figure 4-6 Time chart of high-speed CR oscillation and the trimming process with base timer

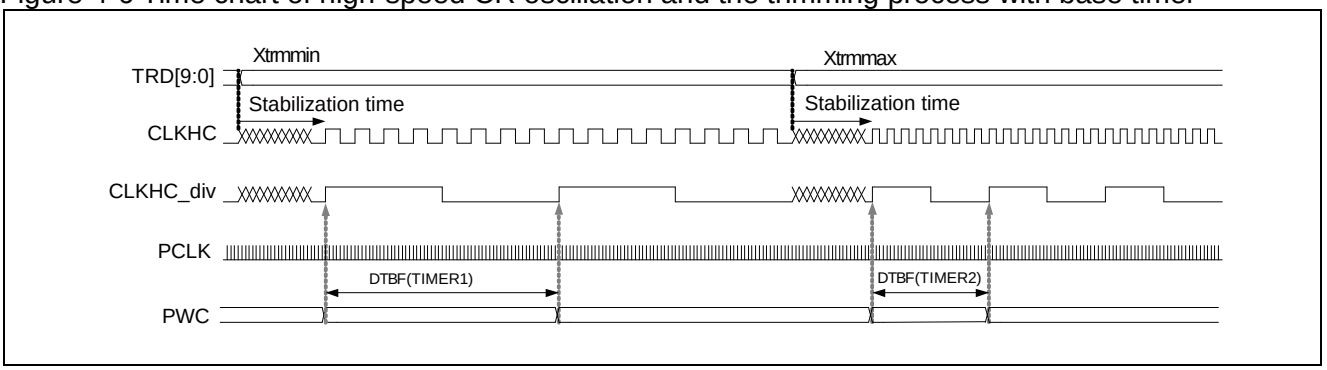

Run the base run timer by setting the main oscillation clock (CLKMO) or the main PLL clock (using the main clock for input clock) as the master clock (measurement reference clock).
Activate a trigger on the rising of the high-speed CR frequency division clock (CLKHC_div) when setting Xtrmmin or Xtrmmax, read the input capture timer value at that time, and perform the following calculations.

Tmax = (TIMER1 × PCLK) / DIV

Tmin = (TIMER2 × PCLK) / DIV

- TIMER1, TIMER2 : Count value of base timer (PWC)
- PCLK : APB1 bus clock
- DIV : Frequency division ratio set by CSR bit of Division Setting Register(MCR_PSR)

Example: When PCLK = 40 MHz (25 ns), frequency division ratio = 1/8, and TIMER1 = 100,

Tmax = (100 × 25 ns) / 8 = 312.5 ns

<Note>

The base timer channel that can be used for frequency trimming is ch.0.
PCLK in Figure 4-6 is an APB1 bus clock.
Select the main clock (CLKMO) or main PLL clock (using the main clock for input clock) to the master clock.

■ Frequency trimming procedure example

Figure 4-7 shows a frequency trimming procedure example of high-speed CR oscillation.

Figure 4-7 Frequency Trimming Procedure Example of High-speed CR Oscillation

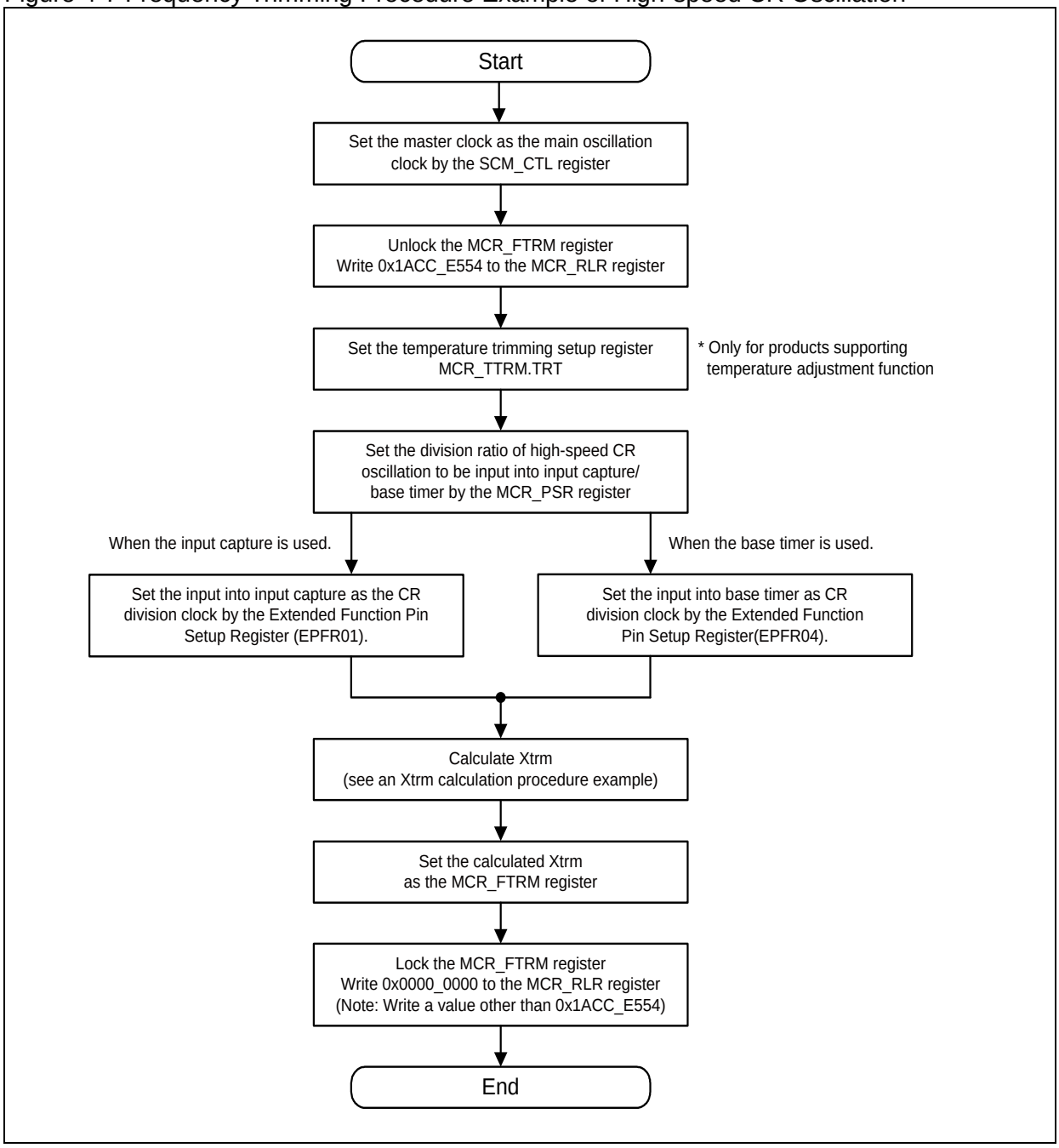

■ Xtrm calculation procedure example (TYPE0, TYPE3, TYPE7 products)

Figure 4-8 shows an Xtrm calculation procedure example for TYPE0, TYPE3, and TYPE7 products. Perform frequency trimming in the two stages of coarse adjustment and fine adjustment.

Figure 4-8 Xtrm Calculation Procedure Example (TYPE0, TYPE3, TYPE7 products)

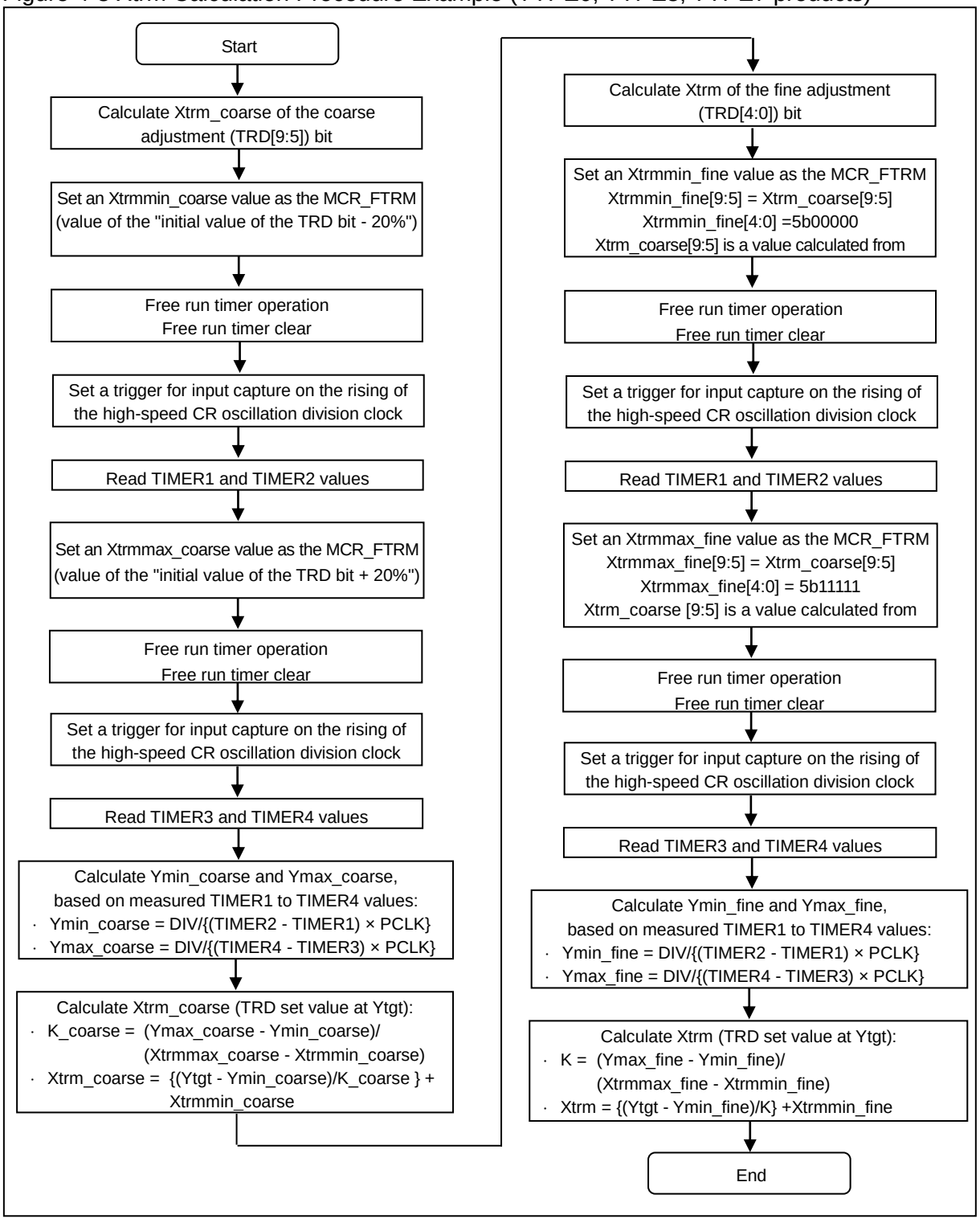

■ Xtrm calculation procedure example (TYPE1, TYPE2, TYPE4, and TYPE5 products)

Figure 4-9 shows an Xtrm calculation procedure example for TYPE1, TYPE2, TYPE4, and TYPE5 products.

Figure 4-9 Xtrm Calculation Procedure Example (TYPE1, TYPE2, TYPE4, and TYPE5 products)

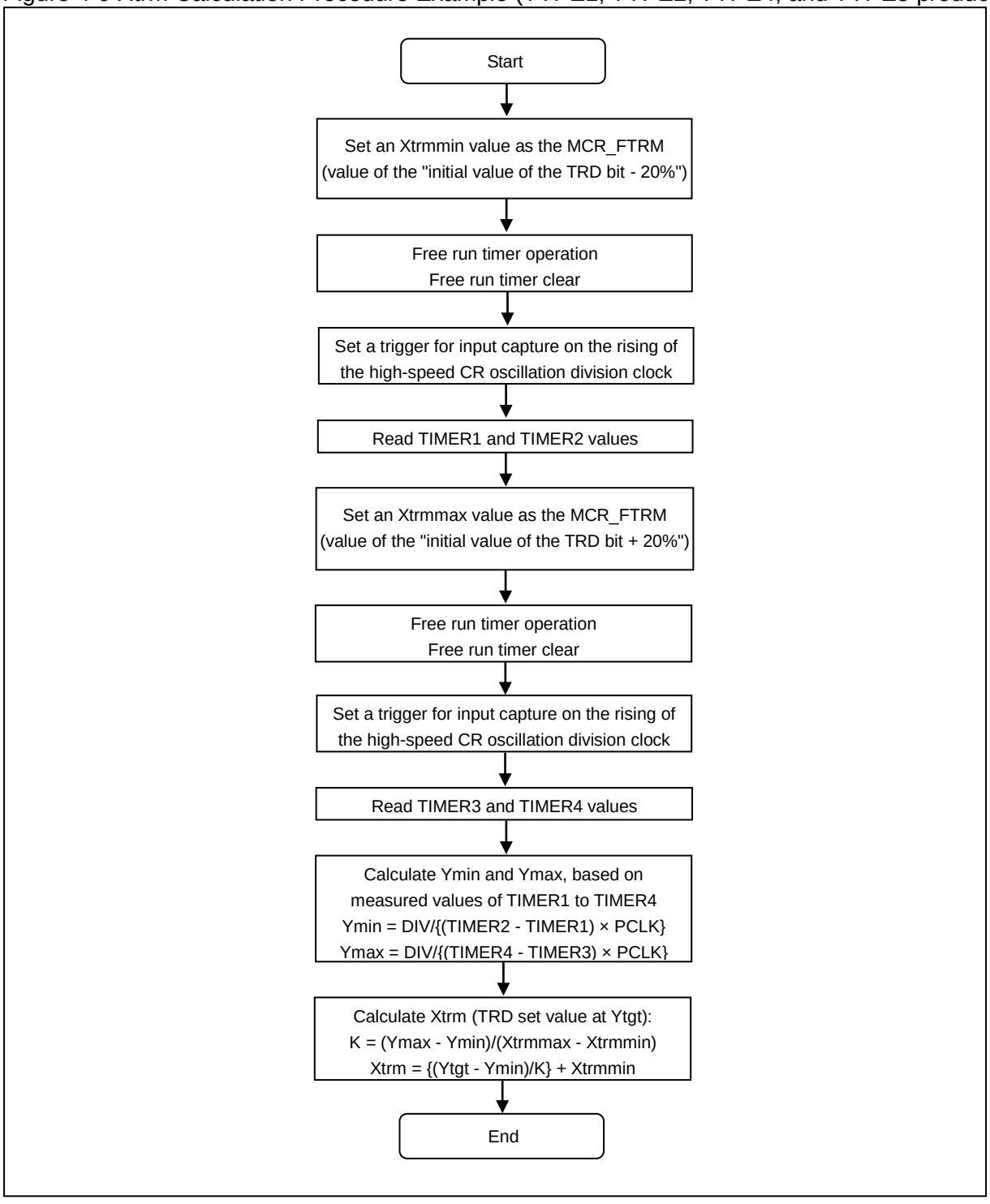

■ Xtrm calculation procedure example (TYPE6, TYPE8 to TYPE12 products)

Figure 4-10 shows an Xtrm calculation procedure example for TYPE6, TYPE8 to TYPE12 products. Perform frequency trimming in the two stages of coarse adjustment and fine adjustment.

Figure 4-10 Xtrm Calculation Procedure Example (TYPE6, TYPE8 to TYPE12 products)

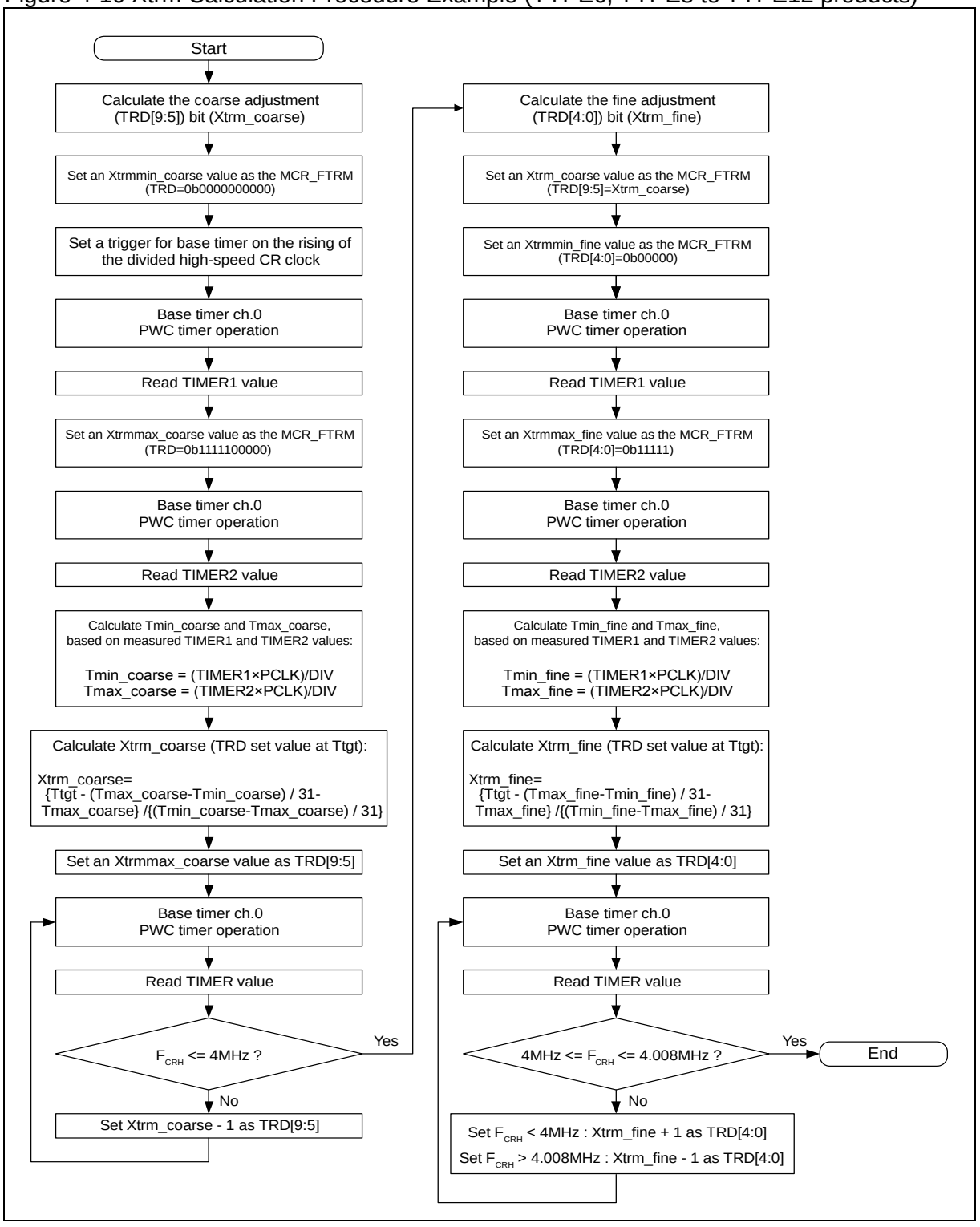

■ Procedure example of using "CR trimming" area storage data inside flash memory

Figure 4-11 shows a procedure example of reading trimming data stored in the "CR trimming" area inside the flash memory and setting it in the High-speed CR oscillation Frequency Trimming Register.

Figure 4-11 Procedure Example of Using "CR Trimming" Area Storage Data

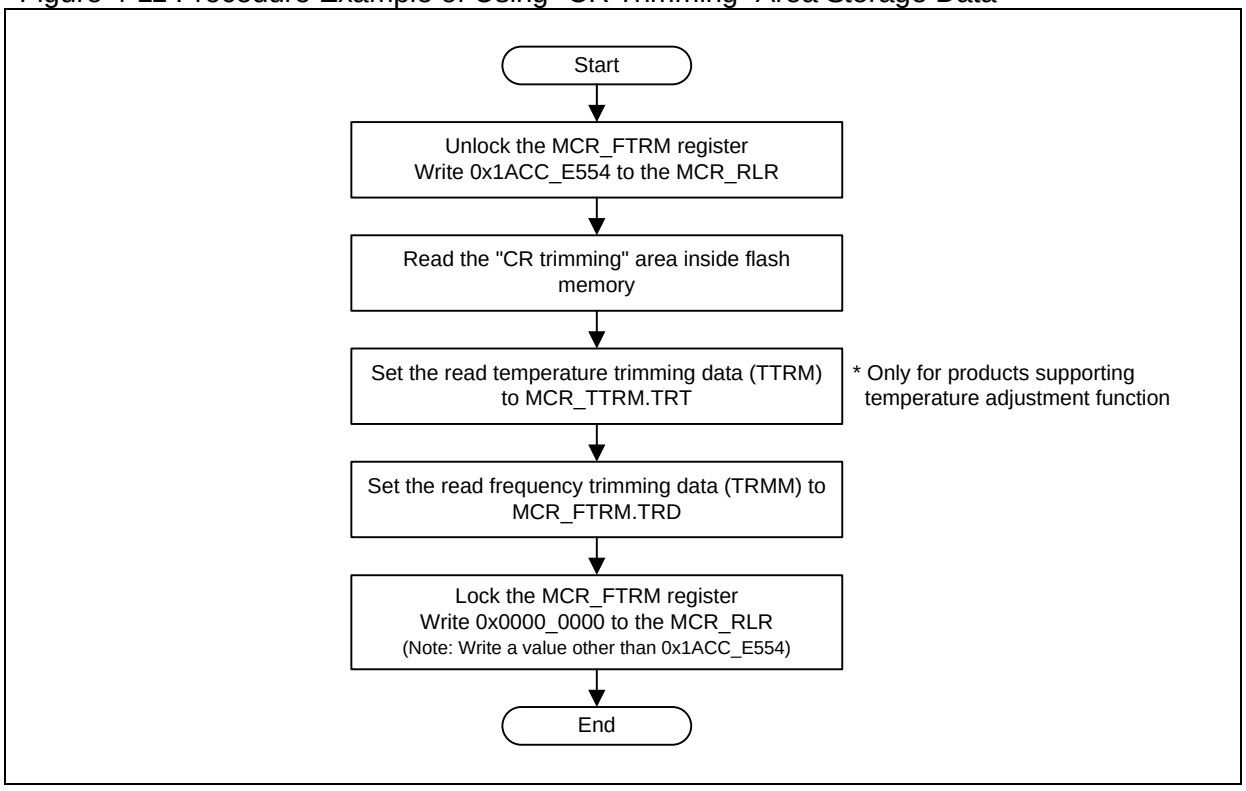

<Note>

For the address of the CR trimming area and the CR trimming data mirror register (CRTRMM), see "Flash Programming Manual" for the product used.

5. High-Speed CR Trimming Function Register List

The following lists and explains registers used for trimming function of the high-speed CR oscillator.

Table 5-1 lists the registers.

Table 5-1 Register list

Abbreviation	Register name	Reference
MCR_PSR	High-speed CR oscillation Frequency Division Setup Register	5.1
MCR_FTRM	High-speed CR oscillation Frequency Trimming Register	5.2
MCR_TTRM	High-speed CR oscillation Temperature Trimming Register	5.3
MCR_RLR	High-speed CR oscillation Register Write-Protect Register	5.4

5.1. High-speed CR oscillation Frequency Division Setup Register (MCR_PSR)

The MCR_PSR register sets the frequency division ratio of high-speed CR oscillation.
A divided clock can be input into input capture.
The functions of this register vary depending on the product TYPE.

■ Products other than TYPE3, TYPE7

● Register configuration

bit	7	6	5	4	3	2	1	0
Field	Reserved						CSR	
Attribute	-						R/W	
Initial value	-						01	

● Register functions

[bit7:2] Reserved: Reserved bits
"0b000000" is read from these bits.
Set these bits to "0b000000" when writing.

[bit1:0] CSR: High-speed CR oscillation frequency division ratio setting bits

bit1	bit0	Description
0	0	1/4
0	1	1/8 [Initial value]
1	0	1/16
1	1	1/32

■ TYPE3, TYPE7 products

● Register configuration

bit	7	6	5	4	3	2	1	0
Field	Reserved						CSR	
Attribute			-				R/W	
Initial value			-				001	

● Register functions

[bit7:3] Reserved : Reserved bits

"0b00000" is read from these bits.

Set these bits to "0b00000" when writing.

[bit2:0] CSR: High-speed CR oscillation frequency division ratio setting bits

bit2	bit1	bit0	Description
0	0	0	1/4
0	0	1	1/8 [Initial value]
0	1	0	1/16
0	1	1	1/32
1	0	0	1/64
1	0	1	1/128
1	1	0	1/256
1	1	1	1/512

5.2. High-speed CR oscillation Frequency Trimming Register (MCR_FTRM)

The MCR_FTRM register sets the frequency trimming value.
This section explains register configuration and register functions.
The functions of this register vary depending on product TYPE.

■ TYPE0 products

● Register configuration

bit	31															16
Field	Reserved															
Attribute	-															
Initial value	-															

bit	15	14	13	12	11	10	9	8	7	6	5	4	3	2	1	0
Field	Reserved						TRD[9:0]									
Attribute	-						R/W									
Initial value	-						0	1	1	0	0	0	0	0	0	0

● Register functions

[bit31:10] Reserved: Reserved bits
"0" is always read from these bits.
These bits have no effect when written.

[bit9:0] TRD[9:0] : Frequency trimming setup bits

bit9:5	Description
When write	These bits make coarse adjustment to the high-speed CR oscillator frequency. For values to be set, see "■ How to calculate the frequency trimming data" in "4. High-Speed CR Trimming Function Setup Procedure Example". The frequency fluctuates in steps of approximately 6% each time ±1 setting is made.
When read	A specified value is read. As an initial value, "0b01100" is read.

bit4:0	Description
When write	These bit smake fine adjustment to the high-speed CR oscillator frequency. For values to be set, see "■ How to calculate the frequency trimming data" in "4. High-Speed CR Trimming Function Setup Procedure Example". The frequency fluctuates in steps of approximately 0.2% each time ±1 setting is made.
When read	A specified value is read. As an initial value, "0b00000" is read.

<Notes>

- This register is not initialized by software reset.
- For values to be set to the TRD bits, see "■ How to calculate the frequency trimming data" in "4. High-Speed CR Trimming Function Setup Procedure Example".

■ TYPE3, TYPE7 products

● Register configuration

bit	31															16
Field	Reserved															
Attribute	-															
Initial value	-															

bit	15	14	13	12	11	10	9	8	7	6	5	4	3	2	1	0
Field	Reserved						TRD[9:0]									
Attribute	-						R/W									
Initial value	-						0110001110									

● Register functions

[bit31:10] Reserved: Reserved bits

"0" is always read from these bits.

These bits have no effect when written.

[bit9:0] TRD[9:0] : Frequency trimming setup bits

bit9:5	Description
When write	These bits make coarse adjustment to the high-speed CR oscillator frequency. For values to be set, see "■ How to calculate the frequency trimming data" in "4. High-Speed CR Trimming Function Setup Procedure Example". The frequency fluctuates in steps of approximately 6% each time ±1 setting is made.
When read	A specified value is read. As an initial value, "0b01100" is read.

bit4:0	Description
When write	These bits makefine adjustment to the high-speed CR oscillator frequency. For values to be set, see "■ How to calculate the frequency trimming data" in "4. High-Speed CR Trimming Function Setup Procedure Example". The frequency fluctuates in steps of approximately 0.4% each time ±1 setting is made.
When read	A specified value is read. As an initial value, "0b01110" is read.

<Notes>

- This register is not initialized by software reset.
- For values to be set to the TRD bits, see "■ How to calculate the frequency trimming data" in "4. High-Speed CR Trimming Function Setup Procedure Example".

■ TYPE1, TYPE2, TYPE4, TYPE5 products

● Register configuration

bit	31															16
Field	Reserved															
Attribute	-															
Initial value	-															

bit	15							8	7	6	5	4	3	2	1	0
Field	Reserved								TRD[7:0]							
Attribute	-								R/W							
Initial value	-								01111111							

● Register functions

[bit31:8] Reserved: Reserved bits

"0" is always read from these bits.

These bits have no effect when written.

[bit7:0] TRD[7:0]: Frequency trimming setup bits

bit7:0	Description
When write	These bits make adjustment to the high-speed CR oscillator frequency. For values to be set, see "■ How to calculate the frequency trimming data" in "4. High-Speed CR Trimming Function Setup Procedure Example". The frequency fluctuates in steps of approximately 0.4% each time ±1 setting is made.
When read	A specified value is read. As an initial value, 0b01111111 is read.

<Notes>

- This register is not initialized by software reset.
- For values to be set to the TRD bits, see "■ How to calculate the frequency trimming data" in "4. High-Speed CR Trimming Function Setup Procedure Example".

■ TYPE6, TYPE8 to TYPE12 products

● Register configuration

bit	31															16
Field	Reserved															
Attribute	-															
Initial value	-															

bit	15	14	13	12	11	10	9	8	7	6	5	4	3	2	1	0
Field	Reserved						TRD[9:0]									
Attribute	-						R/W									
Initial value	-						1000000000									

● Register functions

[bit31:10] Reserved: Reserved bits

"0" is always read from these bits.

These bits have no effect when written.

[bit9:0] TRD[9:0] : Frequency trimming setup bits

bit9:5	Description
When write	These bits makes coarse adjustment to the high-speed CR oscillator frequency. For values to be set, see "■ How to calculate the frequency trimming data" in "4. High-Speed CR Trimming Function Setup Procedure Example". The period fluctuates in steps of approximately 1% each time ±1 setting is made.
When read	A specified value is read. As an initial value, 0b10000 is read.

bit4:0	Description
When write	These bits make fine adjustment to the high-speed CR oscillator frequency. For values to be set, see "■ How to calculate the frequency trimming data" in "4. High-Speed CR Trimming Function Setup Procedure Example". The period fluctuates in steps of approximately 0.2% each time ±1 setting is made.
When read	A specified value is read. As an initial value, 0b00000 is read.

<Notes>

- This register is not initialized by software reset.
- For values to be set to the TRD bits, see "■ How to calculate the frequency trimming data" in "4. High-Speed CR Trimming Function Setup Procedure Example".

5.3. High-Speed CR Oscillation Temperature Trimming Register (MCR_TTRM)

The MCR_TTRM register sets the temperature trimming value.
This section explains register configuration and register functions.
This register is provided only for product TYPEs supporting temperature adjustment.
For the supporting product TYPEs, see Table 1-2.

● Register configuration

bit	31															16
Field	Reserved															
Attribute	-															
Initial value	-															

bit	15										5	4				0
Field	Reserved											TRT[4:0]				
Attribute	-											R/W				
Initial value	-											01111				

● Register functions

[bit31:5] Reserved: Reserved bits
"0" is always read from these bits.
These bits have no effect when written.

[bit4:0] TRT[4:0]: Temperature trimming setup bits

bit4:0	Description
When write	These bits make adjustment to the high-speed CR oscillator frequency fluctuation due to temperature. For values to be set, see the values in the TTRMM bit of the CR trimming data mirror register (CRTRMM). For the CR trimming data mirror register (CRTRMM), see “FLASH PROGRAMMING MANUAL” of product used.
When read	A specified value is read. As an initial value, 0b01111 is read.

<Notes>

- This register is not initialized by software reset.
- Before obtaining the frequency trimming data, be sure to set this register.

5.4. High-Speed CR Oscillation Register Write-Protect Register (MCR_RLR)

The MCR_RLR register controls the write-protect state of the frequency trimming register (MCR_FTRM)/temperature trimming register (MCR_TTRM).

■ Register configuration

bit	31															16
Field	TRMLCK[31:16]															
Attribute	R/W															
Initial value	0x0000															

bit	15															0
Field	TRMLCK[15:0]															
Attribute	R/W															
Initial value	0x0001															

■ Register functions

[bit31:0] TRMLCK[31:0] : Register write-protect bits

bit31:0	Description
When read	When 0x00000000 is read, the MCR_FTRM/MCR_TTRM registers are currently unlocked. When 0x00000001 is read, the MCR_FTRM/MCR_TTRM registers are currently locked.
Writing a value other than 0x1ACCE554	Locks the MCR_FTRM/MCR_TTRM registers.
Writing 0x1ACCE554	Unlocks the MCR_FTRM/MCR_TTRM registers.

<Note>

This register is not initialized by software reset.

6. High-Speed CR Trimming Function Usage Precautions

This section explains the precautions for using the high-speed CR trimming function.

- Low-speed CR oscillator
  This trimming function is only enabled for the high-speed CR oscillator.
  It cannot apply to the low-speed CR oscillator.

- Data stored in the "CR trimming" area
  The "CR trimming" area stores the factory preset frequency/temperature trimming data. For the address of the "CR trimming" area, see "Flash Programming Manual" for the product used.
  When erasing flash memory, the “CR trimming” area is also erased at the same time. To preserve the data in the "CR trimming" area, save the data in the "CR trimming" area to the different device (ex. RAM) before erasing the flash memory.
  Or, erase the data in area other than the "CR trimming" area.

- Oscilation frequency accuracy of High-speed CR Oscilator supporting temperature adjustment
  For the products supporting temperature adjustment, the accuracy of High-speed CR oscillator cannot be guarrnteed if the settings of High-speed CR Oscillation Temperature Trimming Register (MCR_TTRM) and High-speed CR Oscillation Frequency Trimming Register (MCR_TTRM) are not implemented.
  So, be sure to make the settings of the registers.

- How to use input capture
  For information about how to use input capture, see Chapters "Multi-Function Timer" in "Timer Part" and "I/O Port".

- How to use base timer
  For information about how to use base timer, see Chapters "Base Timer" in "Timer Part" and "I/O Port".

- FCS (Anomalous Frequency Detection)
  For FCS function (anomalous frequency detection), see Chapter "Clock supervisor". Do not perform CR trimming after the FCS function is enabled.

CHAPTER 2-3: Low-Speed CR Prescaler

This chapter shows the functions and operation of low-speed CR Prescaler.

1. Low-speed CR Prescaler Overview
2. Low-speed CR Prescaler Configuration
3. Low-speed CR Prescaler Operation and Setup Procedure Example
4. Low-speed CR Prescaler Register

1. Low-speed CR Prescaler Overview

This section shows the overview of low-speed CR prescaler.

■ Low-speed CR Prescaler

By setting the low-speed CR prescaler load register(LCR_PRSLD), the low-speed CR prescaler divides low-speed CR and generates low-speed CR clock(CLKLC).
This macro can correct the accuracy of low-speed CR. For the correcting method, see the example of correcting low-speed CR.

2. Low-speed CR Prescaler Configuration

This section shows the block diagram of low-speed CR prescaler.

■ Block Diagram of Low-speed CR Prescaler

For the block diagram of low-speed CR prescaler, see Figure 2-1.

Figure 2-1 Block Diagram of Low-speed CR Prescaler

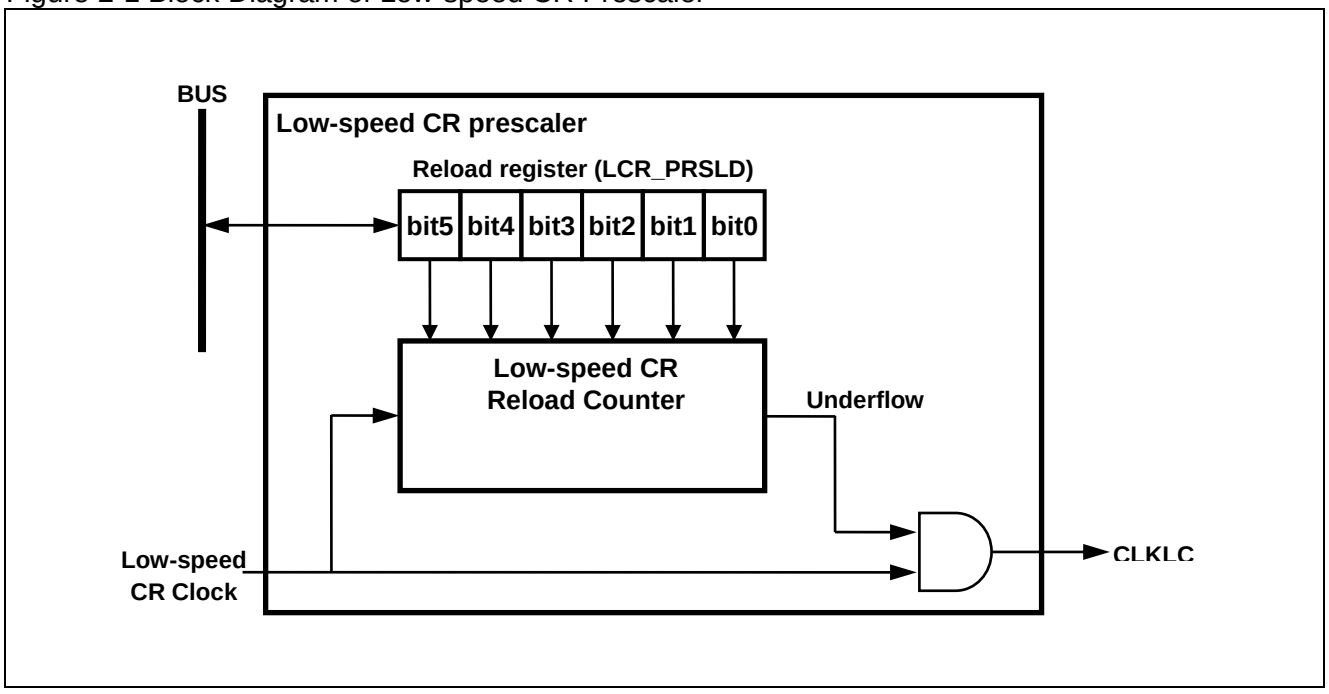

- **Low-speed CR Prescaler Load Register (LCR_PRSLD)**

  Sets the division ratio (reload value) of Low-speed CR Prescaler.

- **Low-speed CR Reload Counter**

  This is the down counter which generates the Low-speed CR Division Clock (CLKLC).

3. Low-speed CR Prescaler Operation and Setup Procedure Example

This section explains the operation of Low-speed CR Prescaler. This section also shows the example of setup procedures.

■ Setup Procedures of Low-speed CR Prescaler

The Low-speed CR is asynchronous with the peripheral clock (PCLK).
For writing to the Low-speed CR Prescaler Reload Register, the peripheral clock is used. Therefore, if the setting change of the Low-speed CR Prescaler Load Register and the reload of the reload counter occur simultaneously, a value reloaded to the reload counter is not guaranteed.
So, execute the rewriting of the Low-speed CR Prescaler Reload Register conforming to the following procedures.

● For Switching the division clock

The initial value of the Low-speed CR Prescaler Reload Register(LCR-PRSLD) is “0”.
Thus, for changing the value from the initial value, these procedures are unnecessary.

1. Set "0" to the Low-speed CR Prescaler Reload Register (LCR_PRSLD).
2. Wait until the value of the Low-speed CR Prescaler Reload Register (LCR_PRSLD) is reloaded to the reload counter. The wait time is obtained by calculating the following formula:
   Low-speed CR cycle (50 kHz: 20 µs) × "the set value before changed to "0" in Item 1."
3. Write new setup value to the Low-speed CR Prescaler Reload Register (LCR_PRSLD).

For wait time at setup change, see Table 3-1.

Table 3-1 Setup Wait Time

Reload Value before Setup	Setup Value	Wait Time
0	0	Not exists.
1	0	20 µs (20 µs × 1)
2	0	40 µs (20 µs × 2)
3	0	60 µs (20 µs × 3)
:	:	:
60	0	1200 µs (20 µs × 60)
61	0	1220 µs (20 µs × 61)
62	0	1240 µs (20 µs × 62)
63	0	1260 µs (20 µs × 63)

<Notes>

- The division clock cannot be stopped.
- The setting of the Low-speed CR Prescaler Reload Register (LCR_PRSLD) is executed at the underflow of the Low-speed CR Reload Counter.

■ Operation of Low-speed CR Prescaler

For the operation of the Low-speed CR Prescaler, see Figure 3-1.

Figure 3-1 Low-speed CR Prescaler Operation

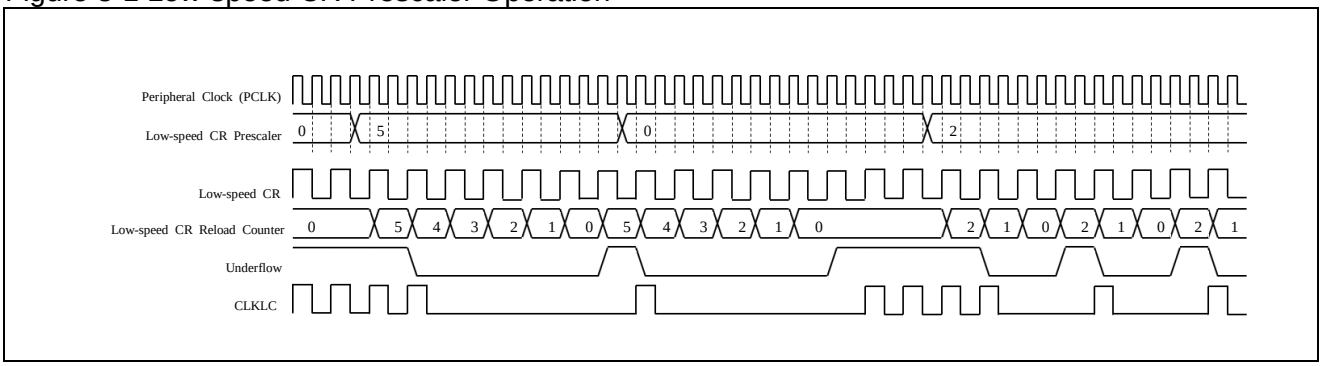

1. Sets the Low-speed CR Prescaler Load Register (LCR_PRSLD) in synchronization with the peripheral clock (PCLK)
2. Retrieves the value of the Low-speed CR Prescaler Load Register (LCR_PRSLD) at the moment the Low-speed CR Reload Counter indicates "0".
3. Outputs the Low-speed CR (CLKLC) at the moment when the Low-speed CR Reload Counter underflow occurs.

■ Low-speed CR Correction Example

For the correction example of the Low-speed C, see Figure 3-2.

Figure 3-2 Low-speed CR Correction Example

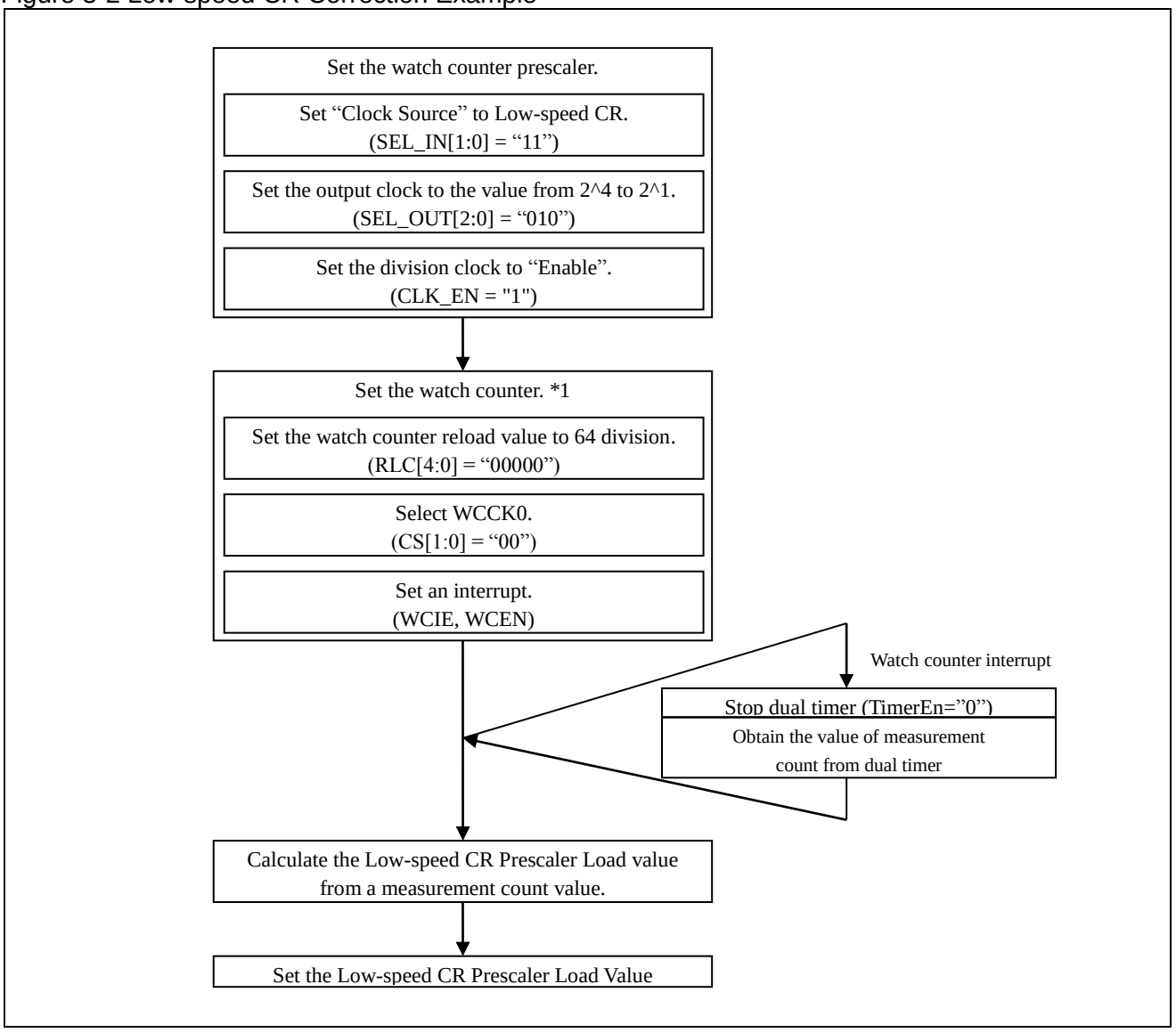

*1 : Above is the example by using dual timer. It is possible to measure by using Base timer or MFT.

4. Low-speed CR Prescaler Register

This section shows the list of the Low-speed CR Prescaler Register.

■ Low-speed CR Prescaler Register

Table 4-1 List of Low-speed CR Prescaler Register

Abbreviation	Register name	Reference
LCR_PRSLD	Low-speed CR Prescaler Control Register	4.1

4.1. Low-speed CR Prescaler Control Register (LCR_PRSLD)

The Low-speed CR Prescaler Control Register is used to set the division ratio of low-speed CR.

● Register configuration

bit	7	6	5	4	3	2	1	0
Field	Reserved		LCR_PRSLD[5:0]					
Attribute	-		R/W					
Initial value	-		000000					

● Register functions

[bit7:6] Reserved: Reserved bits

Always “0” is read.

They have no effect in write mode.

[bit5:0] LCR_PRSLD: Low-speed CR Prescaler Load

At writing, sets the division ratio of the Low-speed CR Prescaler (the reload value of a reload counter) .

At reading, the set value is read.

<Note>

This register is not initialized with software reset.

CHAPTER 3: Clock supervisor

This chapter explains the clock supervisor functions.

1. Overview
2. Configurations and Block Diagrams
3. Explanation of Operations
4. Setup Procedure Examples
5. Operation Examples
6. Registers
7. Usage Precautions

1. Overview

This section provides an overview of the clock supervisor functions.

The clock supervisor includes the following two types of functions.

- **Clock failure detection (CSV: Clock failure detection by clock Supervisor)**
  The clock failure detection monitors the main and sub clocks. If a rising edge of the monitored clock is not detected within the specified period, this function determines that the oscillator has failed, and outputs a system reset request.
- **Anomalous frequency detection (FCS: anomalous Frequency detection by Clock Supervisor)**
  The anomalous frequency detection monitors frequency of the main clock. Within the specified period between an edge and the next edge of the divided clock of high-speed CR, this function counts up the internal counter value using the main clock. If the count value reaches out of the set window range, the function determines that the main clock frequency is anomalous, and outputs an interrupt request to the CPU or a system reset request.

2. Configurations and Block Diagrams

This section explains the block diagrams of the clock supervisor functions.

■ Clock failure detection

Figure 2-1 shows the block diagram of the clock failure detection.

Figure 2-1 Clock Failure Detection Block Diagram

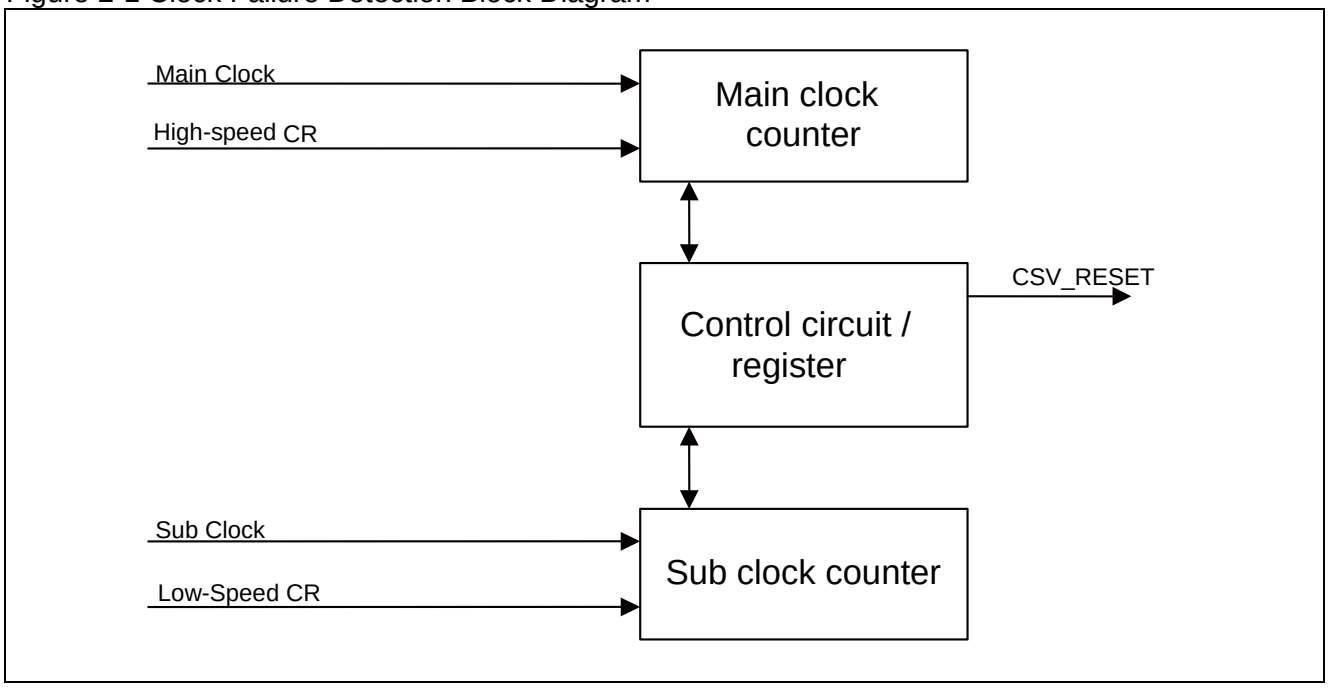

The clock failure detection consists of the following three types of blocks.

● Control circuit/register

- This block includes a circuit controlling the clock failure detection,
- Also includes setup registers enabling/disabling the clock failure detection.

● Main clock counter

A counter that monitors the main clock with the high-speed CR clock.

● Sub clock counter

A counter that monitors the sub clock with the low-speed CR clock.

■ Anomalous frequency detection

Figure 2-2 shows the block diagram of the anomalous frequency detection.

Figure 2-2 Anomalous Frequency Detection Block Diagram

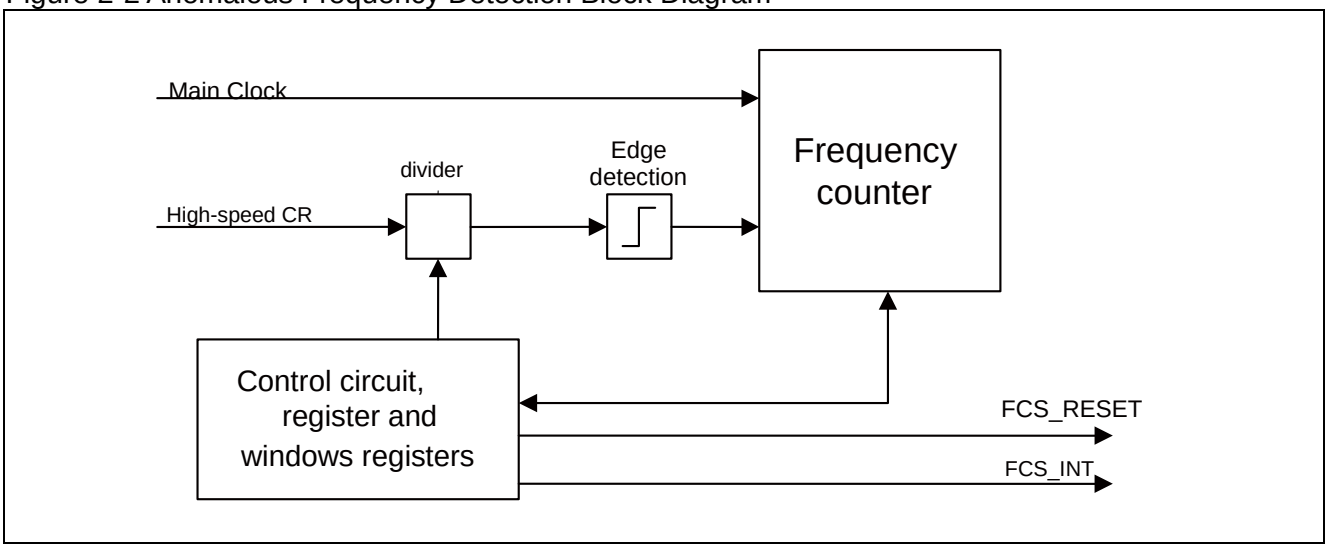

The anomalous frequency detection consists of the following three types of blocks.

● Control circuit/register and window registers

- This block includes a circuit controlling the anomalous frequency detection.
- Also includes setup registers enabling/disabling the anomalous frequency detection.
- Also includes window registers defining the frequency range for measurements.

● Frequency counter

A counter based on the main clock.

● Divider/edge detection

- This block divides the high-speed CR.
- Also detects rising edges of the divided clock of high-speed CR.

3. Explanation of Operations

This section explains the operations of the clock supervisor functions.

■ Clock failure detection function

The clock failure detection function monitors the main and sub clocks. If a rising edge of the monitored clock is not detected within the specified period, this function determines that the oscillator has failed, and outputs a system reset request.

- This reset request is referred to as the CSV reset request.
- CSV function monitors each of the main and sub clocks independently.
- It stops monitoring when the main and sub oscillators stop oscillating.
- It stops monitoring while waiting for oscillation stabilization wait time.
- When the oscillation stabilization wait time of main and sub oscillators ends, CSV function is automatically enabled.

<Notes>

- Each of the main and sub clock failure detection function can be enabled/disabled independently using the CSV control register (CSV_CTL).
- The main clock is monitored with the high-speed CR clock, and the sub clock is monitored with the low-speed CR clock. When a rising edge is not detected within 32 clocks of high-speed CR for the main clock, or within 32 clocks of low-speed CR for the sub clock, this function determines that the oscillator has failed.

■ Anomalous frequency detection function

The anomalous frequency detection function monitors the main clock.

Within the specified period between a rising edge and the next rising edge of the divided clock of high-speed CR, this function counts up the internal counter using the main clock. If the count value reaches out of the set window range, the function determines that the main clock frequency is anomalous, and outputs an interrupt request or a system reset request to the CPU.

- This interrupt request is referred to as the FCS interrupt request, and reset request as the FCS reset request.
- The FCS function only monitors frequency of the main clock.
- It stops monitoring when the main oscillator stops oscillating.
- It stops monitoring while waiting for oscillation stabilization wait time.
- The FCS function is started with software, a user program.

<Notes>

- If the FCS reset is enabled:
  An interrupt request occurs the first time a counter value deviates from the set window. If the interrupt request has not been cleared, and the counter value falls out of the specified window, a system reset request is output.
  If the FCS reset is not enabled, the reset request is masked.
- The counter value, if it goes out of the specified window, is stored in the frequency detection counter register (FCSWD_CTL).

4. Setup Procedure Examples

This section explains examples of setting up the clock supervisor functions.

■ Example of clock failure detection function setup procedure

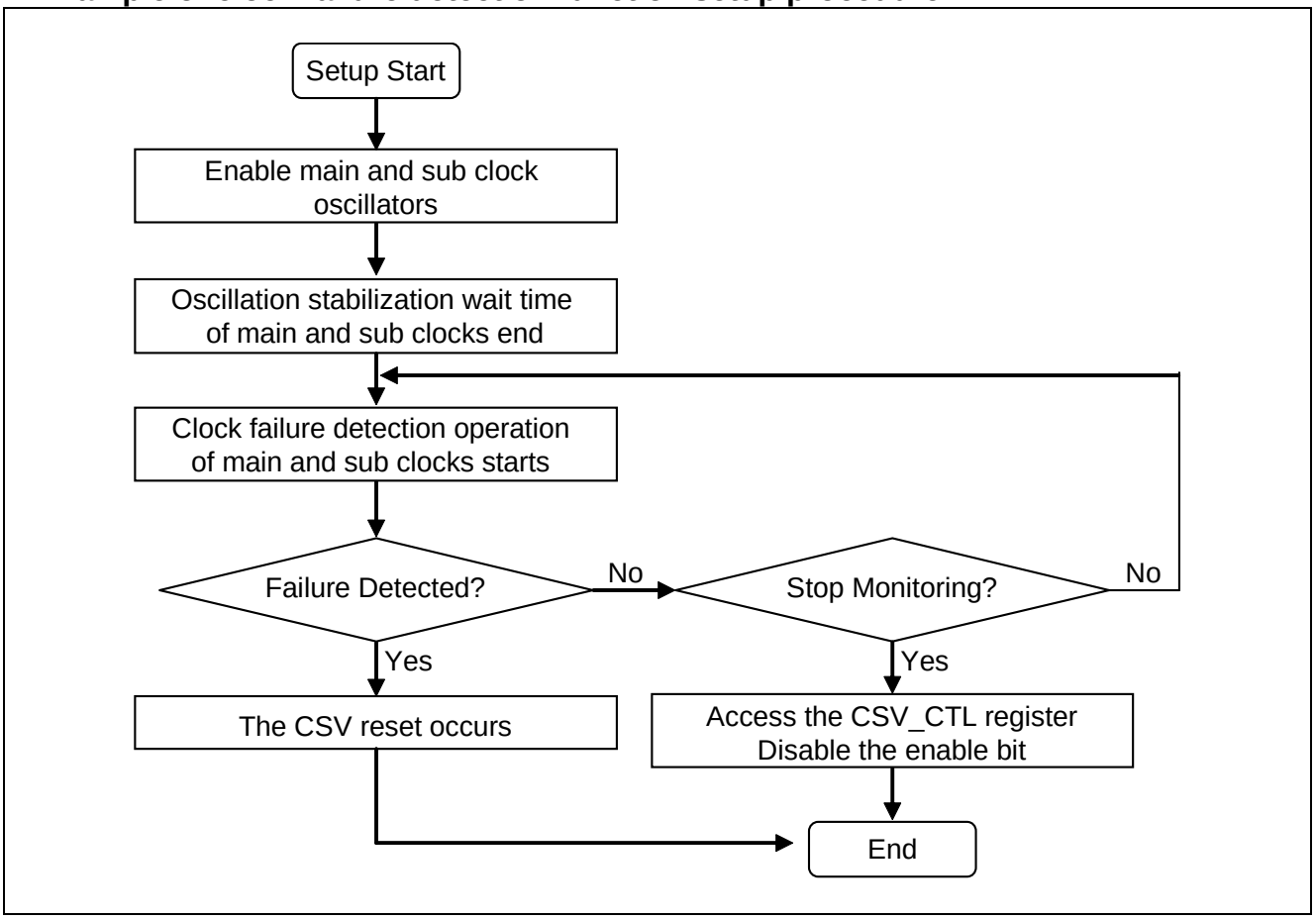

■ Example of Anomalous frequency detection function setup procedure

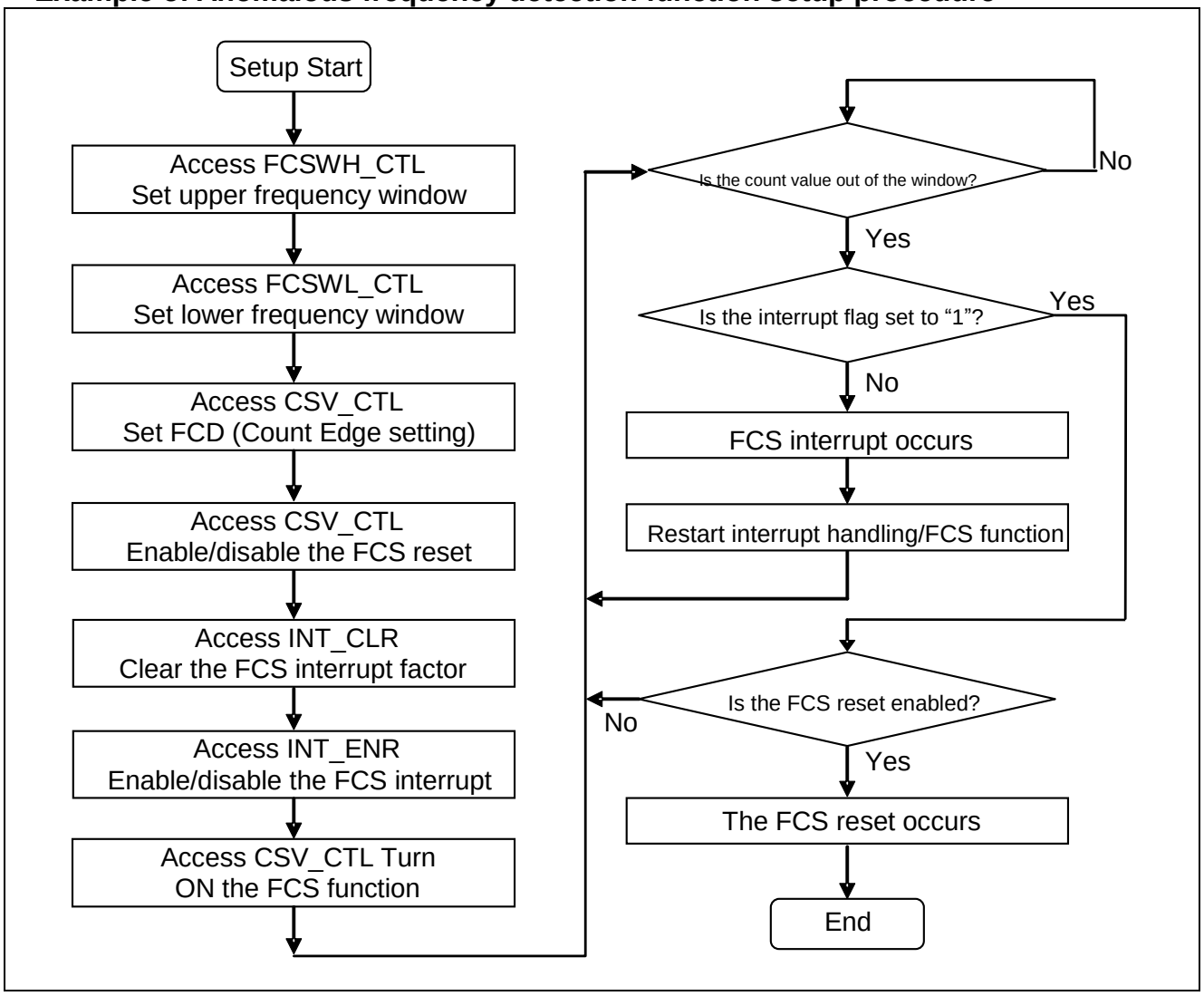

5. Operation Examples

This section explains examples of clock supervisor operations.

■ Clock failure detection

Figure 5-1 provides an example of clock failure detection operation.

Figure 5-1 Example of clock failure detection operation

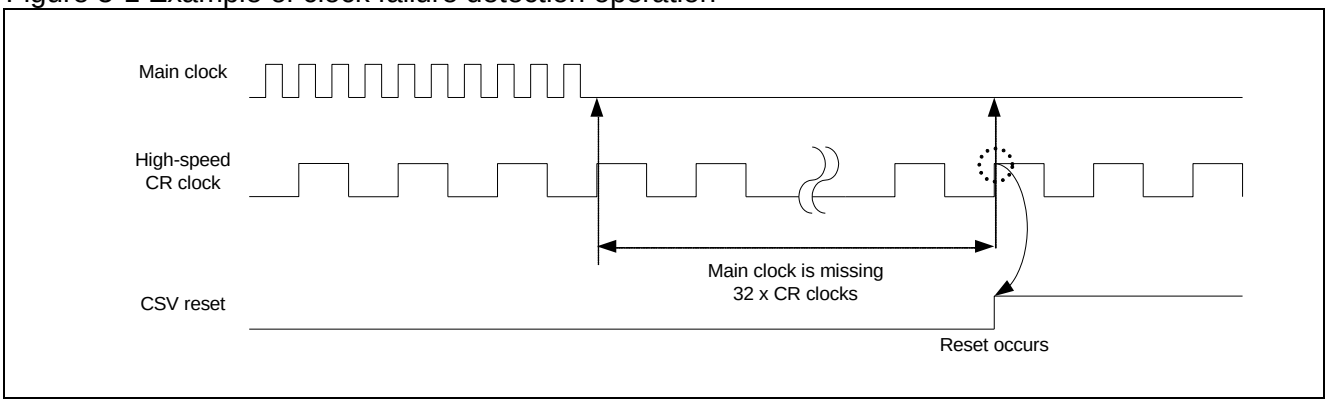

1. The main clock stops due to failure.
2. The function counts up clocks using the high-speed CR clock.
3. If the main clock keeps stopping during 32 clocks of high-speed CR, the function determines that the clock has failed and issues the CSV reset.

   Note: In case of the sub clock monitoring, the function determines that the sub clock has failed if it keeps stopping during 32 clocks of low-speed CR.

Figure 5-2 provides an example of the clock failure detection operation in stop mode.

Figure 5-2 Example of clock failure detection operation in stop mode

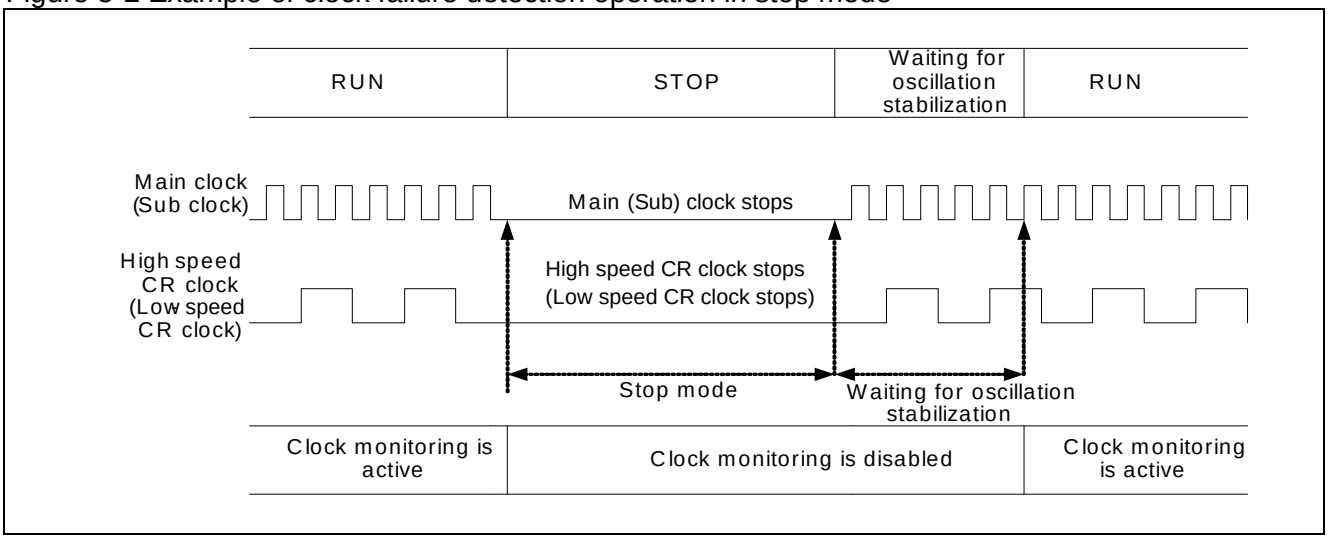

1. In stop mode, the main clock and high-speed CR clock stop.
   Meanwhile, the clock monitoring function also stops.
2. Upon the release of stop mode, oscillation of main clock and high-speed CR clock restart, waiting for oscillation stabilization. Meanwhile, the clock monitoring function keeps stopping.
3. When the oscillation stabilization wait time ends, the clock monitoring restarts.

■ Anomalous frequency detection

Figure 5-3 provides an example of anomalous frequency detection function operation.

Figure 5-3 Example of anomalous frequency detection function operation

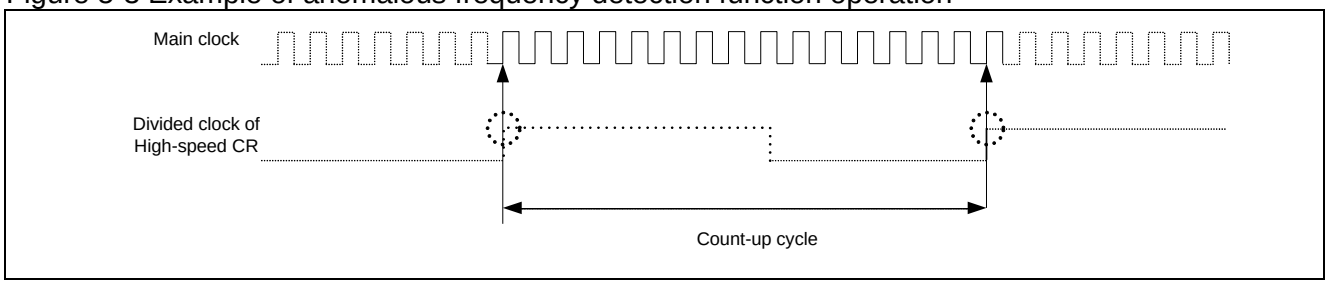

1. This function detects rising edges of the divided clock of high-speed CR.
2. After detecting edges, it counts up clocks using the main clock.
3. It keeps counting up until it detects the next rising edge of the divided clock of high-speed CR.
4. Let "α" be the count value with the main clock.
   Also let A denote the lower window value, and B the upper window value. Compare the count value α with those window values and if expression
   $A \leq \alpha \leq B$
   holds true, then the frequency is considered to be normal.
   If the count value α is out of the range, i.e., either
   $\alpha < A$, or $B < \alpha$
   is true, then the frequency is considered to be anomalous, and an interrupt occurs.
   If the interrupt flag has not been cleared after the interrupt and an anomalous frequency is detected again, then the function issues a reset depending on the setting.

■ Example of anomalous frequency detection function window setting

The anomalous frequency detection counts up between edges of the divided clock of high-speed CR. The measurement interval is also affected by the accuracy of CR. When you configure the window register value, therefore, the CR accuracy must be considered for the value.
For frequency accuracy of the CR oscillator, check the relevant "Data Sheet".

● Calculation method

The count value range of anomalous frequency detection must be added the CR accuracy, then, the window register value is set. The count range expression must be used as follows.

$$\text{Count value} = \left[\frac{1}{\text{Frequency of divided clock of CR} \times \left(1 \pm \frac{\text{CR accuracy}}{100} \right)} \right] \times \text{Frequency of main clock}$$

The count value by main clock of frequency L [Hz] can be calculated using the divide-by-Y CR oscillator clock of ±Z% accuracy with frequency K [Hz].

Count value A (positive CR frequency accuracy) = 1/[(K/Y) × (1 + Z/100)] × L
Count value B (negative CR frequency accuracy) = 1/[(K/Y) × (1 - Z/100)] × L

Those expressions lead the count value within the range A to B added internal CR accuracy.
Set the value smaller than count value A for the lower limit of the window, and larger than count value B for the upper limit.

The window setting is determined by the value allowed for frequency fluctuation of main oscillation defined by the user.

● Example calculation

The count value by main clock of frequency 4 MHz is calculated using the divide-by-1024 CR oscillator clock of ±5% accuracy with frequency 4 MHz.

Count value A (positive CR frequency accuracy)

$$\text{Count value A} = \left[\frac{1}{\frac{4\times10^6}{1024} \times \left(1 + \frac{5}{100} \right)} \right] \times 4\times10^6 \approx 975$$

Count value B (negative CR frequency accuracy)

$$\text{Count value B} = \left[\frac{1}{\frac{4\times10^6}{1024} \times \left(1 - \frac{5}{100} \right)} \right] \times 4\times10^6 \approx 1078$$

Those expressions yield the count value within the range 975 to 1078 including the high-speed CR error. If the window setting value is 5%, window setting value is as follows.

Window lower limit = 975 × 0.95(-5%) = 926.25 ≈ 3.43 MHz
Window upper limit = 1078 × 1.05(+5%) = 1131.9 ≈ 4.64 MHz

Thus, you can recognize that a main clock frequency out of the 3.4 MHz to 4.6 MHz range is anomalous. Table 5-1 provides an example of the window settings.

Table 5-1 Example of window settings

Divided clock of High-speed CR	Main clock	High-speed CR error	Count value including high-speed CR error	Lower limit of window set value	Upper limit of window set value
Divide-by-1024 clocks of CR:4 MHz	4 MHz	±5%	975 (≈ 3.61 MHz) - 1078 (≈ 4.42 MHz)	926 (≈ 3.43 MHz)	1131 (≈ 4.64 MHz)

6. Registers

This section explains the register list of the clock supervisor functions.

■ Register list

Table 6-1 shows the register list.

Table 6-1 Register list

Abbreviation	Register name	Reference
CSV_CTL	CSV control register	6.1
CSV_STR	CSV status register	6.2
FCSWH_CTL	Frequency detection window setting register (Upper)	6.3
FCSWL_CTL	Frequency detection window setting register (Lower)	6.4
FCSWD_CTL	Frequency detection counter register	6.5

6.1. CSV control register (CSV_CTL)

The CSV_CTL register configures the control of CSV function.

■ Register configuration

bit	15	14	13	12	11	10	9	8
Field	Reserved		FCD		Reserved		FCSRE	FCSDE
Attribute	-		R/W		-		R/W	R/W
Initial value	0		111		00		0	0

bit	7	6	5	4	3	2	1	0
Field	Reserved						SCSVE	MCSVE
Attribute	-						R/W	R/W
Initial value	000000						1	1

■ Register functions

[bit15] Reserved : Reserved bit

"0" is read from this bit.

Set this bit to "0" when writing.

[bit14:12] FCD: FCS count cycle setting bits

Process	Description
When 000 is written	Setting is prohibited
When 001 is written	
When 010 is written	
When 011 is written	
When 100 is written	
When 101 is written	1/256 frequency of high-speed CR oscillation
When 110 is written	1/512 frequency of high-speed CR oscillation
When 111 is written	1/1024 frequency of high-speed CR oscillation [Initial value]
When read	The register value is read.

[bit11:10] Reserved : Reserved bits

"0b00" is read from these bits.

Set these bits to "0b00" when writing.

[bit9] FCSRE: FCS reset output enable bit

Process	Description
When 0 is written	The FCS reset is disabled [Initial value]
When 1 is written	The FCS reset is enabled
When read	The register value is read.

[bit8] FCSDE: FCS function enable bit

Process	Description
When 0 is written	The FCS function is disabled [Initial value]
When 1 is written	The FCS function is enabled.
When read	The register value is read.

[bit7:2] Reserved : Reserved bits

"0b000000" is read from these bits.

Set these bits to "0b000000" when writing.

[bit1] SCSVE: Sub CSV function enable bit

Process	Description
When 0 is written	The sub CSV function is disabled
When 1 is written	The sub CSV function is enabled. [Initial value]
When read	The register value is read.

[bit0] MCSVE: Main CSV function enable bit

Process	Description
When 0 is written	The main CSV function is disabled
When 1 is written	The main CSV function is enabled. [Initial value]
When read	The register value is read.

<Note>

This register is not initialized by software reset.

6.2. CSV status register (CSV_STR)

The CSV_STR register indicates the status of CSV function.

■ Register configuration

bit	7	6	5	4	3	2	1	0
Field	Reserved						SCMF	MCMF
Attribute	-						R	R
Initial value	000000						0	0

■ Register functions

[bit7:2] Reserved : Reserved bits

"0b000000" is read from these bits.

Set these bits to "0b000000" when writing.

[bit1] SCMF : Sub clock failure detection flag

Process	Description
When written	No effect
When 0 is read	No sub clock failure has been detected. [Initial value]
When 1 is read	A sub clock failure has been detected.

[bit0] MCMF : Main clock failure detection flag

Process	Description
When written	No effect
When 0 is read	No main clock failure has been detected. [Initial value]
When 1 is read	A main clock failure has been detected.

<Note>

This register is cleared when being read.

6.3. Frequency detection window setting register (Upper) (FCSWH_CTL)

The FCSWH_CTL register configures the frequency detection window setting register (Upper).

■ Register configuration

bit	15	0
Field	FWH	
Attribute	R/W	
Initial value	0xFFFF	

■ Register functions

[bit15:0] FWH: Frequency detection window setting bits (Upper)

Process	Description
When written	Any value can be written to these bits.
When read	The register value is read.

<Notes>

- Set a value larger than the value set in FCSWL_CTL (Frequency detection window setting register (Lower)).
- This register is not initialized by software reset.

6.4. Frequency detection window setting register (Lower) (FCSWL_CTL)

The FCSWL_CTL register configures the frequency detection window setting register (Lower).

■ Register configuration

bit	15	0
Field	FWL	
Attribute	R/W	
Initial value	0x0000	

■ Register functions

[bit15:0] FWL: Frequency detection window setting bits (Lower)

Process	Description
When written	Any value can be written to these bits.
When read	The register value is read.

<Notes>

- Set a value smaller than the value set in FCSWH_CTL (Frequency detection window setting register (Upper)).
- This register is not initialized by software reset.

6.5. Frequency detection counter register (FCSWD_CTL)

The FCSWD_CTL register indicates the counter value of frequency detection using the main clock.

■ Register configuration

bit	15	0
Field	FWD	
Attribute	R	
Initial value	0x0000	

■ Register functions

[bit15:0] FWD: Frequency detection count data

Process	Description
When written	No effect on operation
When read	The count value is read.

<Notes>

- This register retains the count value when detecting an error.
- This register is not initialized by software reset.

7. Usage Precautions

This section explains the precautions for using the clock supervisor functions.

- For details on enabling and clearing the frequency detection interrupt sources, see Chapter "Clock".

- For details on clock failure detection and anomalous frequency detection reset sources, see Chapter "Resets".

- Operation after the occurrence of a reset
  After the occurrence of a reset triggered by clock failure detection, clock mode returns to high-speed CR.
  Do not select the faulty clock again.

- The high-speed CR clock for use of the frequency detection
  The frequency failure detection is affected by the frequency accuracy of high-speed CR itself.
  When you configure frequency window, therefore, the accuracy of high-speed CR must be considered for the window value. Do not trim the high-speed CR clock after the anomalous frequency detection has been enabled.

- The order of the anomalous frequency detection settings before using
  Before enabling FCS (FCSDE=1), specify the count cycle (FCD), reset enable (FCSRE), and frequency window (FWH/FWL) settings.
  If you want to change any of FCD/FCSRE/FWH/FWL after FCS has been enabled, stop the FCS function before changing the setting. Do not change the setting while FCS is enabled.

- The enable settings of the anomalous frequency detection before using
  Depending on the setting of the FCSRE bit in the CSV control register (CSV_CTL), operation during anomalous frequency detection varies. Table 7-1 shows the setting list.

Table 7-1 List of the FCS function and FCSRE bit settings

	FCSRE=0	FCSRE=1
FCSDE=0	Stops FCS function	Stops FCS function
FCSDE=1	Enables FCS function Generates an interrupt upon error detection	Enables FCS function An interrupt occurs upon the first error detection A reset occurs upon the second error detection

- Interrupt settings for the frequency detection and main timer mode
  The internal bus clock stops while the clock mode is in main timer mode. In this mode, an interrupt does not occur even if an error is detected while FCSRE is set to "0".
  In main timer mode, therefore, do not set FCSRE bit to "0". If FCSRE bit is set to "1", a reset occurs upon the second error detection.

- The settings for CSV OFF and external reset.
  When CSV function is set to OFF, the CSV reset is not generated if the clock failure occurs. The external reset (INITX) is not also accepted if the clock failure occurs. So, it is recommended not to turn OFF the CSV function, if you do not have special reason.

CHAPTER 4: Resets

This chapter explains the function and operation of the resets.

1. Overview
2. Configuration
3. Explanation of Operations
4. Register

1. Overview

This family has the following reset factors and issues a reset to initialize a device upon accepting a reset factor.

- Power-on reset
- INITX pin input
- External power supply/low-voltage detection reset
- Software watchdog reset
- Hardware watchdog reset
- Clock failure detection reset
- Anomalous frequency detection reset
- Software reset
- TRSTX pin input
- Deep standby transition reset

2. Configuration

This section explains configuration of reset circuit.

■ Block Diagram of Resets

Figure 2-1 Block Diagram of Resets

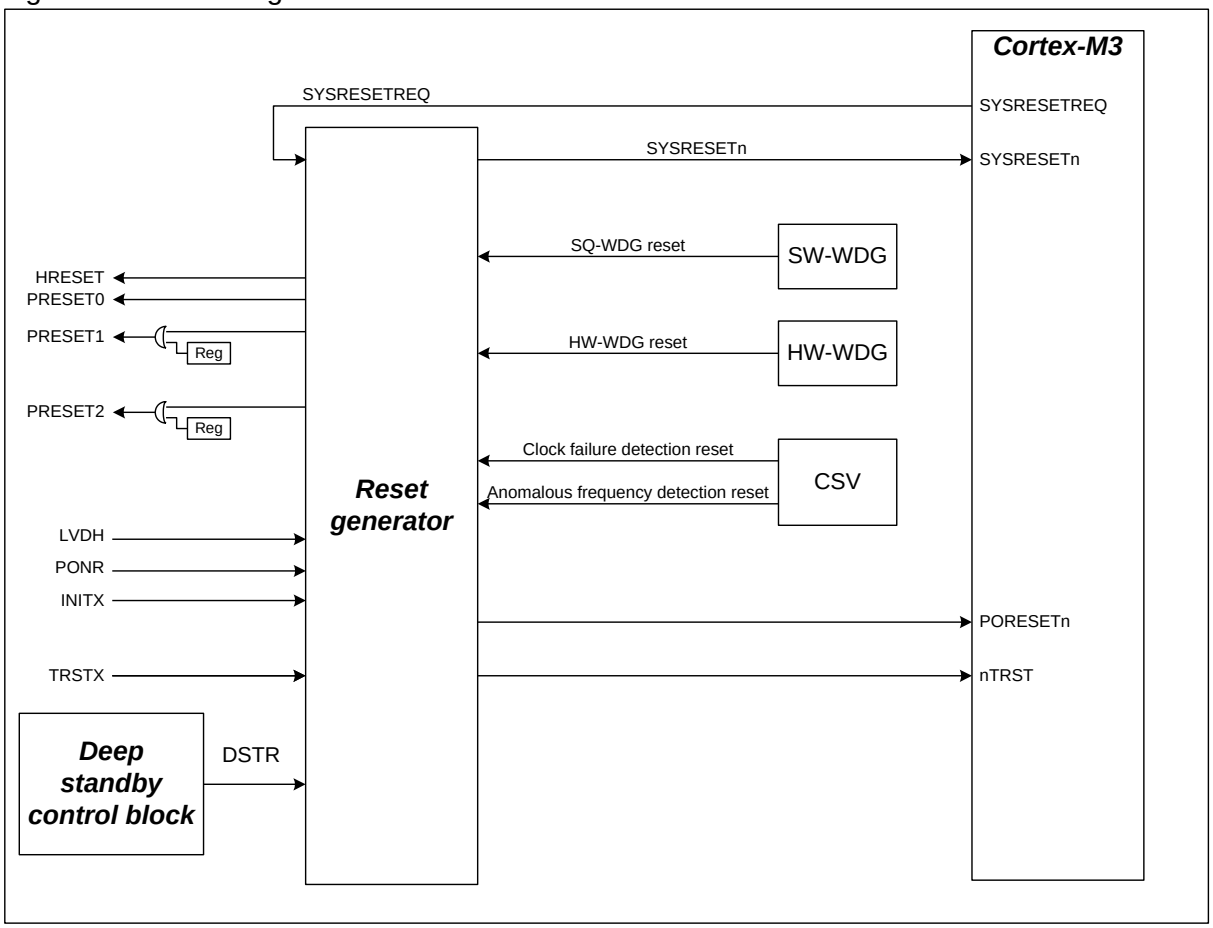

PONR: Power-on reset
INITX: INITX pin input reset
LVDH: Low-voltage detection reset
TRSTX: TRSTX pin input reset
HRESET: AHB bus reset (a bus reset issued by all reset factors)
PRESET0, 1, 2: APB0, APB1, APB2 bus resets (bus resets issued by all reset factors)
SW-WDG reset: Software watchdog reset
HW-WDG reset: Hardware watchdog reset
CSV reset: Clock failure detection reset
FCS reset: Anomalous frequency detection reset
PORESETn: Power-on reset that is input to Cortex-M3
SYSRESETn: System reset that is input to Cortex-M3
SYSRESETREQ: "SYSRESETREQ bit" signal of Cortex-M3 internal reset control register
nTRST: SWJ-DP reset
DSTR: Deep standby transition reset

3. Explanation of Operations

This section explains the operations of the resets of this family.

3.1 Reset Factors

3.2 Resetting Inside the Device

3.3 Reset Sequence

3.4 Operations After Resets are Cleared

3.1. Reset Factors

This section explains reset factors.

■ Power-On Reset (PONR)

A reset that is generated at power-up.

Generated by	This signal is generated by detecting a rising edge of the power supply.
Cleared by	This signal is automatically cleared after issuing a reset.
Initialization target	Initializes all register settings and hardware.
Flag	bit0 (PONR) of reset factor register (RST_STR) = 1

■ INITX Pin Input Reset (INITX)

A reset that is externally input from a device.

Generated by	This signal is generated by inputting a low level to INITX pin.
Cleared by	This signal is cleared by inputting a high level to INITX pin.
Initialization target	Initializes all register settings and hardware except the debug circuit and deep standby control block. Note: The following registers are not initialized. · Reset factor register (RST_STR) · bit15 to bit8 of low-voltage detection voltage setting register (LVD_CTL) (TYPE3, TYPE6, TYPE7, TYPE8 to TYPE12 products) · Deep standby return factor register 1 and 2 (WRFSR, WIFSR) · Deep Standby RAM Retention Register (DSRAMR) · Backup registers from 01 to 16 (BUR01 to BUR16) · The part of RTC register
Flag	bit1 (INITX) of reset factor register (RST_STR) = 1

* The content of the on-chip SRAM is retained if a reset is asynchronously input from the INITX pin.

■ Low-voltage Detection Reset, External Voltage Monitoring (LVDH)

A reset that is input from a low-voltage detection circuit when a decrease in the external voltage is detected.

● Products other than TYPE3, TYPE7

Generated by	This signal is generated when an external voltage is lowered than a specified level.
Cleared by	This signal is cleared when an external voltage is more than a specified level.
Initialization target	Initializes all register settings and hardware.
Flag	bit0 (PONR) of reset factor register (RST_STR) = 1

● TYPE3, TYPE7 products

Generated by	This signal is generated when an external voltage is lowered than a specified level.
Cleared by	This signal is cleared when an external voltage is more than a specified level.
Initialization target	When SVHR = 0001 Initializes all register settings and hardware. When SVHR = 0100 Initializes all register settings and hardware. Note: The following registers are not initialized. · bit15 to bit8 of low-voltage detection voltage setting register (LVD_CTL) · Deep standby return factor register 1 and 2 (WRFSR, WIFSR) · Backup registers from 01 to 16 (BUR01 to BUR16)
Flag	When SVHR = 0001 bit0 (PONR) of reset factor register (RST_STR) = 1 When SVHR = 0100 bit3 (LVDH) of reset factor register (RST_STR) = 1

■ Software Watchdog Reset (SWDGR)

A reset that is input from the software watchdog timer.

Generated by	This signal is generated when the software watchdog timer underflows.
Cleared by	This signal is automatically cleared after issuing a reset.
Initialization target	Initializes all register settings and hardware except the debug circuit, hardware watchdog timer (including control registers), deep standby control block, and RTC (some registers). Note: The following registers are not initialized. · Reset factor register (RST_STR) · bit15 to bit8 of low-voltage detection voltage setting register (LVD_CTL) (TYPE3, TYPE6, TYPE7, TYPE8 to TYPE12 products) · Deep standby return factor register 1 and 2 (WRFSR, WIFSR) · Deep Standby RAM Retention Register (DSRAMR) · Backup registers from 01 to 16 (BUR01 to BUR16) · The part of RTC register
Flag	bit4 (SWDT) of reset factor register (RST_STR)= 1

■ Hardware Watchdog Reset (HWDGR)

A reset that is input from the hardware watchdog timer.

Generated by	This signal is generated when the hardware watchdog timer underflows.
Cleared by	This signal is automatically cleared after issuing a reset.
Initialization target	Initializes all register settings and hardware except the debug circuit and deep standby control block. Note: The following registers are not initialized. · Reset factor register (RST_STR) · bit15 to bit8 of low-voltage detection voltage setting register (LVD_CTL) (TYPE3, TYPE6, TYPE7, TYPE8 to TYPE12 products) · Deep standby return factor register 1 and 2 (WRFSR, WIFSR) · Deep Standby RAM Retention Register (DSRAMR) · Backup registers from 01 to 16 (BUR01 to BUR16) · The part of RTC register
Flag	bit5 (HWDT) of reset factor register (RST_STR) = 1

■ Clock Failure Detection Reset (CSVR)

A reset that is input when the main or sub crystal oscillator being monitored fails.

Generated by	This signal is generated when a clock failure is detected in the main or sub crystal oscillator.
Cleared by	This signal is automatically cleared after issuing a reset.
Initialization target	Initializes all register settings and hardware except the debug circuit and clock failure detection circuit (some registers) and deep standby control block. Note: The following registers are not initialized. · Reset factor register (RST_STR) · bit15 to bit8 of low-voltage detection voltage setting register (LVD_CTL) (TYPE3, TYPE6, TYPE7, TYPE8 to TYPE12 products) · Deep standby return factor register 1 and 2 (WRFSR, WIFSR) · Deep Standby RAM Retention Register (DSRAMR) · Backup registers from 01 to 16 (BUR01 to BUR16) · The part of RTC register
Flag	bit6 (CSVR) of reset factor register (RST_STR) = 1 bit1 (SCMF) or bit0 (MCMF) of CSV status register (CSV_STR) = 1 Note: For details on the CSV_STR, see Chapter "Clock supervisor".

■ Anomalous Frequency Detection Reset (FCSR)

A reset that is input when an anomalous frequency is detected in the main crystal oscillator.

Generated by	This signal is generated when the frequency of the main crystal oscillator is outside of any given setting.
Cleared by	This signal is automatically cleared after issuing a reset.
Initialization target	Initializes all register settings and hardware except the debug circuit, anomalous frequency detection (some registers), deep standby control block, and RTC (some registers). Note: The following registers are not initialized. · Reset factor register (RST_STR) · bit15 to bit8 of low-voltage detection voltage setting register (LVD_CTL) (TYPE3, TYPE6, TYPE7, TYPE8 to TYPE12 products) · Deep standby return factor register 1 and 2 (WRFSR, WIFSR) · Deep Standby RAM Retention Register (DSRAMR) · Backup registers from 01 to 16 (BUR01 to BUR16) · The part of RTC register
Flag	bit7 (FCSR) of reset factor register (RST_STR) = 1

■ Software Reset (SRST)

A reset that is generated when an access to the reset control register occurs.

Generated by	This signal is generated by a write to the Cortex-M3 internal reset control register (SYSRESETREQ bit).
Cleared by	This signal is automatically cleared after issuing a reset.
Initialization target	Initializes all register settings and hardware except the following: Functions and registers that are not initialized by a software reset · Debug circuit · Deep standby control block · RTC · All registers related to clock control · Part of registers that control software and hardware watchdog timers · Part of registers in the clock failure detection circuit · Part of registers that detect an anomalous frequency · Part of registers for CR trimming · Reset factor register (RST_STR) · bit15 to bit8 of low-voltage detection voltage setting register (LVD_CTL) (TYPE3, TYPE6, TYPE7, TYPE8 to TYPE12 products) · RTC mode control register (PMD_CTL) · Deep standby return factor register 1 and 2 (WRFSR, WIFSR) · Deep Standby RAM Retention Register (DSRAMR) · Backup registers from 01 to 16 (BUR01 to BUR16)
Flag	bit8 (SRST) of reset factor register (RST_STR) = 1

■ Deep standby transition reset (DSTR)

This reset occurs when transiting to deep standby mode.

Generated by	This signal is generated by transiting to deep standby mode
Cleared by	This signal is cleared by returning from deep standby mode
Initialization target	Initializes all register settings and hardware except the following: Functions and registers that are not initialized by a deep standby transition reset. · Deep standby control block · RTC · HDMI-CEC/ Remote Control Reception · Some registers of GPIO · Low-voltage detection circuit register · RTC mode control register (PMD_CTL) · Deep standby return factor register 1 and 2 (WRFSR, WIFSR) · Deep standby return permit register (WIER) · WKUP pin input level register (WILVR) · Deep Standby RAM Retention Register (DSRAMR) · Backup registers from 01 to 16 (BUR01 to BUR16)
Flag	The bit of either deep standby return factor register 1 or 2 (WRFSR, WIFSR) is "1". Note: The bit that becomes "1" differs by return factors.

<Notes>

- For Cortex-M3 internal reset control register (SYSRESETREQ) that controls the software reset, see "Chapter 3, System Control", in "Cortex-M3 Technical Reference Manual".
- The reset factor register that can determine the occurrence of each reset factor is initialized only by power-on reset.
- For the details on initialize target of RTC, see the chapter "REAL-TIME CLOCK" in "Timer Part".

3.2. Resetting Inside the Device

This section explains the internal reset signals of this device.

Resets that are internally connected to the device are divided into resets that are input to the Cortex-M3 core and resets that are input to peripheral circuits.

3.2.1 Resets to Cortex-M3

3.2.2 Resets to Peripheral Circuit

3.2.1. Resets to Cortex-M3

The device has three reset inputs to the Cortex-M3: PORESETn, SYSRESETn, and nTRST. The following provides reset factors for these three reset inputs.

■ Power-on reset PORESETn

Reset factors	· Power-on reset (PONR) · Low-voltage detection reset (LVDH) · Deep standby transition reset (DSTR)

■ System reset SYSRESETn

Reset factors	· Power-on reset (PONR) · Low-voltage detection reset (LVDH) · INITX pin input (INITX) · Software watchdog reset (SWDGR) · Hardware watchdog reset (HWDGR) · Clock Failure Detection reset (CSVR) · Anomalous frequency detection reset (FCSR) · Software reset (SRST) · Deep standby transition reset (DSTR)

■ SWJ-DP Reset nTRST

Reset factors	· Power-on reset (PONR) · Low-voltage detection reset (LVDH) · TRSTX pin input (TRSTX) · Deep standby transition reset (DSTR)

3.2.2. Resets to Peripheral Circuit

The bus resets (HRESET, PRESET0, PRESET1, and PRESET2) that are input to the peripheral circuit are basically generated by all reset factors. Resetting of PRESET1 and PRESET2 can be controlled by register settings.

The following provides reset factors for the bus resets.

■ Resets to Peripheral Circuit

● HRESET and PRESET0

Reset factors	· Power-on reset (PONR) · Low-voltage detection reset (LVDH) · INITX pin input (INITX) · Software watchdog reset (SWDGR) · Hardware watchdog reset (HWDGR) · Clock Failure Detection reset (CSVR) · Anomalous frequency detection reset (FCSR) · Software reset (SRST) · Deep standby transition reset (DSTR)

● PRESET1 and PRESET2

Reset factors	· Power-on reset (PONR) · Low-voltage detection reset (LVDH) · INITX pin input (INITX) · Software watchdog reset (SWDGR) · Hardware watchdog reset (HWDGR) · Clock Failure Detection reset (CSVR) · Anomalous frequency detection reset (FCSR) · Software reset (SRST) · APB bus resets (APBC1_PSR and APBC2_PSR) · Deep standby transition reset (DSTR)

<Notes>

- The peripheral circuit is essentially initialized with all reset factors. Depending on the specifications of the peripheral circuit, there are registers that are initialized only with specific causes. For the initialization conditions for registers, see the initialization conditions for the registers described in the relevant chapter.
- For details on APB bus resets (APBC1_PSR and APBC2_PSR), see Chapter "Clock".

3.3. Reset Sequence

This family initiates the program and hardware operations starting with the initial state when a reset factor is cleared.
This family of operations starting with the reset and ending with the initiation of the operations is called a reset sequence.
The following explains a reset sequence.

■ State Transition Diagram for Resets

The following diagram shows a transition of reset states. The detailed operations are given in the following sections "3.4 Operations After Resets are Cleared".

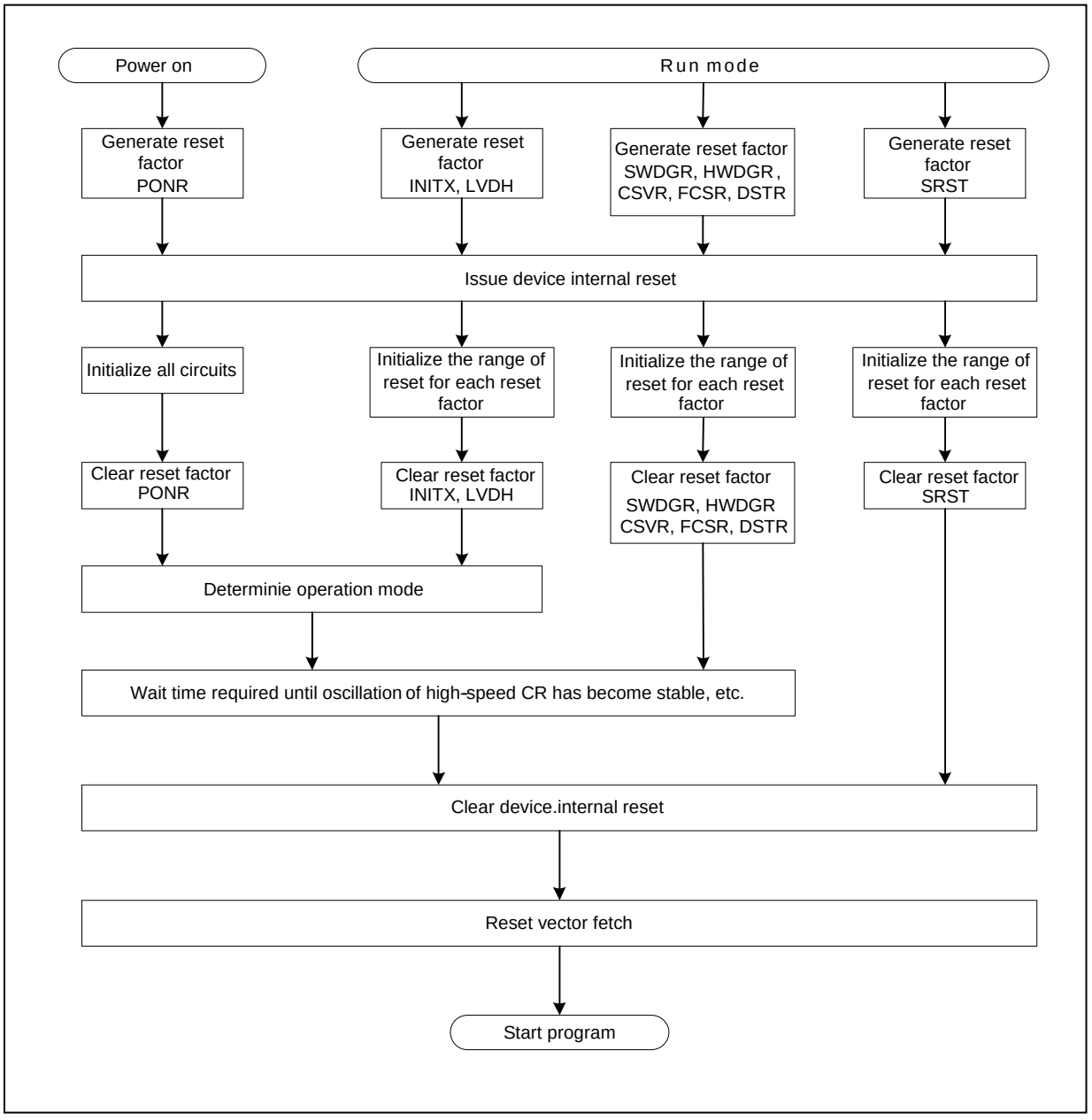

1. Capturing reset factors
   Reset factors are captured and retained until a reset is issued to the device.

2. Issuing resets
   When a reset is ready to be issued, a device internal reset is issued.

3. Clearing resets
   When a reset factor is cleared, a device internal reset is extended for the amount of time required to clear the reset (for example, a wait time required until oscillation of a high-speed CR has become stable). When the extended period of time has expired, the reset is cleared.

4. Determining operation mode
   The operation mode defined by MD0 and MD1 is determined as PONR, LVDH or INITX is cleared and notified to each piece of the hardware. Any other reset factors do not cause the operation mode to change.

5. Reset vector fetch
   After a device internal reset is cleared, the CPU starts fetching a reset vector. The CPU fetches the obtained reset vector into the program counter and starts programmed operations.

3.4. Operations After Resets are Cleared

■ PONR, LVDH, INITX, HWDGR, SWDGR, CSVR, FCSR, DSTR

Figure 3-1 provides an example of the operation waveform after a cause of INITX pin input reset has been cleared.

Figure 3-1 Operation Waveform Example after INITX Pin Input Reset has been Cleared

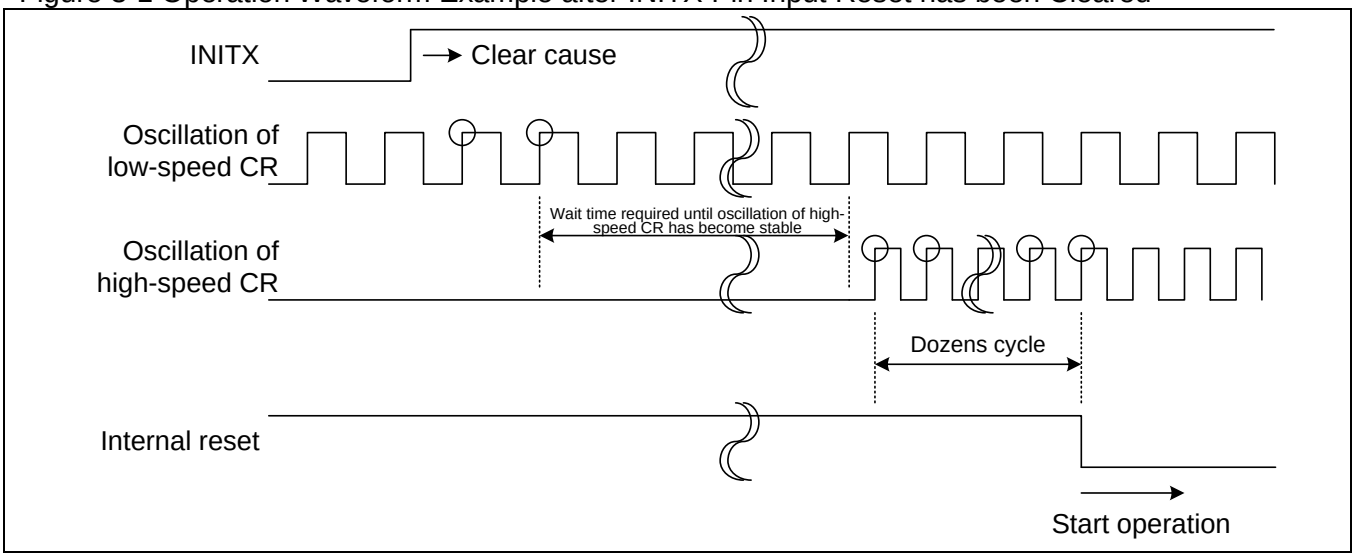

■ SRST

Figure 3-2 shows an example of the operation waveform after a software reset has been cleared.

Figure 3-2 Operation Waveform Example after a Software Reset has been Cleared

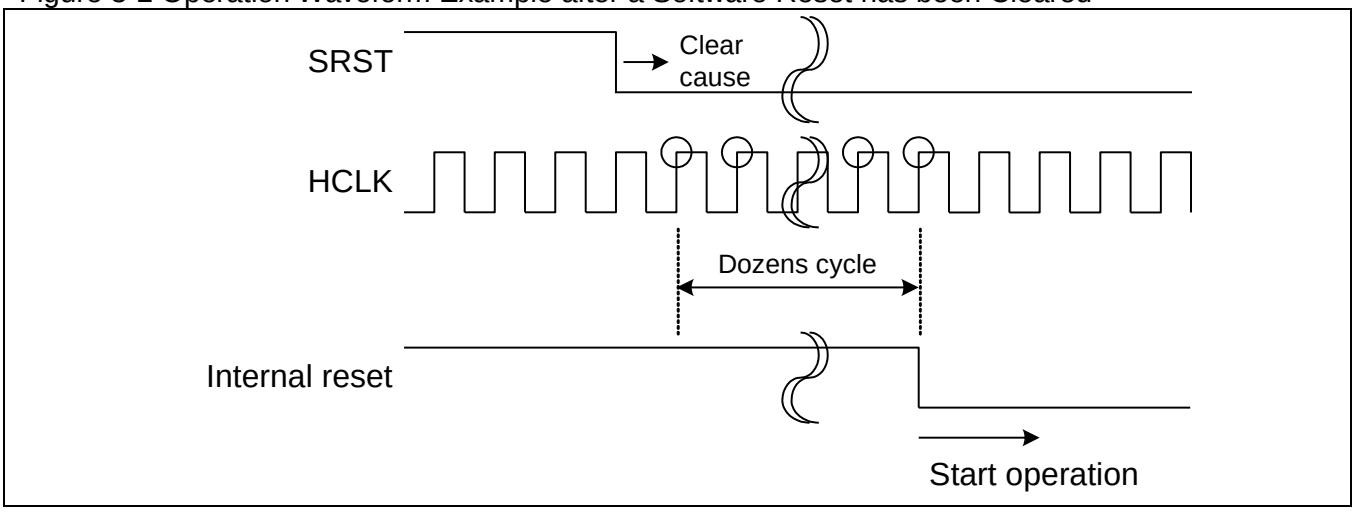

4. Register

This section explains the configuration and functions of the register.

■ Register list

Abbreviation	Register name	Reference
RST_STR	Reset factor register	4.1

4.1. Reset Factor Register (RST_STR)

The reset factor register shows causes of resets that have just occurred. All bits of the RST_STR are initialized by a power-on reset, a low-voltage detection reset or a deep standby transition reset. It is not initialized by any other reset. All bits of the RST_STR are cleared to “0” by reading this register. After initializing, until it has been read, this register stores all reset factors that have been generated.

■Products other than TYPE3, TYPE7

bit	15	14	13	12	11	10	9	8
Field	Reserved							SRST
Attribute				-				R
Initial value				-				0

bit	7	6	5	4	3	2	1	0
Field	FCSR	CSVR	HWDT	SWDT	Reserved		INITX	PONR
Attribute	R	R	R	R	-		R	R
Initial value	0	0	0	0	-		0	1

Note: The initial value shows the value is initialized by a power-on reset, a low-voltage detection reset or a deep standby transition reset.

■TYPE3, TYPE7 products

bit	15	14	13	12	11	10	9	8
Field	Reserved							SRST
Attribute				-				R
Initial value				-				0

bit	7	6	5	4	3	2	1	0
Field	FCSR	CSVR	HWDT	SWDT	LVDH	Reserved	INITX	PONR
Attribute	R	R	R	R	R	-	R	R
Initial value	0	0	0	0	0	-	0	1

Note: The initial value shows the value is initialized by a power-on reset, a low-voltage detection reset or a deep standby transition reset.

[bit15:9] Reserved: Reserved bits

The read value is undefined.

These bits have no effect when written.

[bit8] SRST: Software reset flag

Indicates a reset that is generated by writing "1" to Cortex-M3 internal reset control register (SYSRESETREQ bit). When a software reset is generated, SRST is enabled (SRST = 1).

Value	Description
0	A software reset has not been issued.
1	A software reset has been issued.

[bit7] FCSR: Flag for anomalous frequency detection reset

Indicates a reset when an anomalous frequency is detected in the main oscillation.
When the frequency of the main oscillation is outside of a given setting, a reset is issued and FCSR is enabled (FCSR = 1).

Value	Description
0	An anomalous frequency detection reset has not been issued.
1	An anomalous frequency detection reset has been issued.

[bit6] CSVR: Clock failure detection reset flag

Indicates a reset when a failure is detected in the main or sub oscillation.
If a stop is detected, a reset is issued and CSVR is enabled (CSVR = 1).

Value	Description
0	A clock failure detection reset has not been issued.
1	A clock failure detection reset has been issued.

Note: Please refer to another chapter "Clock supervisor" for the method of judging whether the main oscillation or the sub oscillation broke down.

[bit5] HWDT: Hardware watchdog reset flag

Indicates a reset from the hardware watchdog timer.
If the timer underflows, a reset is issued and HWDT is enabled (HWDT = 1).

Value	Description
0	A hardware watchdog reset has not been issued.
1	A hardware watchdog reset has been issued.

[bit4] SWDT: Software watchdog reset flag

Indicates a reset from the software watchdog timer.
If the timer overflows, a reset is issued and SWDT is enabled (SWDT = 1).

Value	Description
0	A software watchdog reset has not been issued.
1	A software watchdog reset has been issued.

● Products other than TYPE3, TYPE7

[bit3] Reserved: Reserved bit

The read value is undefined.
This bit has no effect when written.

● TYPE3, TYPE7 products

[bit3] LVDH: Low-voltage detection reset flag

Indicates a reset in low-voltage detection (when SVHR = 0100).

If low-voltage is detected, a reset is issued and LVDH is enabled (LVDH = 1).

Value	Description
0	A low-voltage detection reset (when SVHR = 0100) has not been issued.
1	A low-voltage detection reset (when SVHR = 0100) has been issued.

● All products

[bit2] Reserved: Reserved bit

The read value is undefined.

This bit has no effect when written.

[bit1] INITX: INITX pin input reset flag

Indicates a reset that is externally input.

If a reset is externally input, INITX is enabled (INITX = 1).

Value	Description
0	An INITX pin input reset has not been issued.
1	An INITX pin input reset has been issued.

● TYPE0 to TYPE2, TYPE4, TYPE5 products

[bit0] PONR: Power-on reset/low-voltage detection reset flag

Indicates a reset at power-on and when a low-voltage is detected.

If a rising edge of power supply or a low-voltage is detected, a reset is issued and PONR is enabled (PONR = 1).

Value	Description
0	A power-on reset or low-voltage detection reset has not been issued.
1	A power-on reset or low-voltage detection reset has been issued.

● TYPE6, TYPE8 to TYPE12 products

[bit0] PONR: Power-on reset/low-voltage detection reset flag

Indicates a reset when the power supply is turned on and when low voltage is detected and deep standby transition reset.

If the power is on, low voltage is detected, or transition is made to deep standby mode, a reset is issued and PONR is enabled (PONR = 1).

Value	Description
0	Power-on reset, low-voltage reset, or deep standby transition reset has not been issued.
1	Power-on reset, low-voltage reset, or deep standby transition reset has been issued.

● TYPE3, TYPE7 products

[bit0] PONR: Power-on reset/low-voltage detection reset flag

Indicates a reset (SVHR = 0001) when the power supply is turned on and when low voltage is detected and deep standby transition reset.

If the power is on, low voltage is detected, or transition is made to deep standby mode, a reset is issued and PONR is enabled (PONR = 1).

Value	Description
0	Power-on reset, low-voltage reset (when SVHR = 0001), or deep standby transition reset has not been issued.
1	Power-on reset, low-voltage reset (when SVHR = 0001), or deep standby transition reset has been issued.

<Notes>

- TYPE0 to TYPE2, TYPE4, TYPE5 products
  - This register is initialized by a power-on reset or low-voltage detection reset. It is not initialized by any other reset factors. Reading the register clears all bits.
  .
- TYPE6, TYPE8 to TYPE12 products
  - This register is initialized by Power-on reset, low-voltage detection reset, and deep standby transition reset. It is not initialized by other reset factors. Also, reading the register clears all bits.
  .
- TYPE3, TYPE7 products
  - This register is initialized by Power-on reset, low-voltage detection reset (when SVHR = 0001), and deep standby transition reset. It is not initialized by other reset factors. Also, reading the register clears all bits.
  .
- Determine whether it is a return from deep standby mode or not by deep standby return factor registers 1 and 2 (WRFSR and WIFSR). For details, see "8.5 Deep standby return factor register 1(WRFSR)" and "8.6 Deep standby return factor register 2(WIFSR)" in Chapter "Low Power Consumption Mode".

CHAPTER 5-1: Low-voltage Detection Configuration

This chapter describes the configuration for low-voltage detection.

1. Configuration

1. Configuration

For the configuration of low-voltage detection, see the descriptions of related chapters shown below.

■ Reference chapter of the Low-voltage detection

Table 1-1 Correspondence table for Low-voltage detection chapter

Product TYPE	Reference
TYPE0 to TYPE2, TYPE4, TYPE5	Chapter "Low-voltage Detection Configuration (A)"
TYPE3,TYPE7	Chapter "Low-voltage Detection Configuration (B)"
TYPE6, TYPE8 to TYPE12	Chapter "Low-voltage Detection Configuration (C)"

CHAPTER 5-2: Low-voltage Detection (A)

This chapter explains the functions and operations of the Low-voltage Detection Circuit (A).

1. Overview
2. Configuration
3. Explanation of Operations
4. Setup Procedure Examples
5. Registers

1. Overview

The Low-voltage Detection Circuit monitors the power supply voltage, and generates reset and interrupt signals when the power supply voltage falls below the detection voltage.

■ Overview of Low-voltage Detection Circuit

● Operations of Low-voltage Reset Circuit

- This circuit monitors the power supply voltage (VCC) and generates a reset signal when the power supply voltage falls below the specified voltage.
- This circuit always monitors the power supply voltage.
- This circuit monitors the power supply voltage even in standby modes and deep standby modes.
- This circuit generates a reset signal when the reduction of the power supply voltage is detected in standby modes and deep standby modes.

● Operations of Low-voltage Interrupt Circuit

- This circuit monitors the power supply voltage (VCC) and generates an interrupt signal when the power supply voltage falls below the specified voltage.
- This circuit allows selection of whether to enable or stop operations. The initial value is set to disable.
- This circuit allows specification of the detection voltage.
- This circuit can monitor the power supply voltage even in standby modes and deep standby modes.
- This circuit returns from standby modes and deep standby modes when the reduction of the power supply voltage is detected in those modes

<Notes>

- If a low-voltage detection interrupt is enabled or the detection voltage is specified for a low-voltage detection interrupt, this circuit starts VCC voltage monitoring after the stabilization wait time of the Low-voltage Detection Circuit has lapsed.
  For the stabilization wait time of the Low-voltage Detection Circuit, see "Data Sheet" of the product used.
- This circuit does not conduct monitoring the power supply voltage if PCLK2 is gated by TIMER mode, RTC mode, STOP mode, Deep standby RTC mode, Deep standby STOP mode, or APB2 Prescaler Register (APBC2_PSR) while waiting for the stabilization of the Low-voltage Detection Circuit. After the status flag is read and the stabilization wait time has lapsed, change to the desired mode.
- The Low-voltage Detection Voltage Control Register (LVD_CTL) is write-protected to prevent a writing error. To release write protection mode, write 0x1ACCE553 to the Low-voltage Detection Voltage Protection Register (LVD_RLR).

2. Configuration

This section shows the block diagram of the Low-voltage Detection Circuit.

■ Block diagram of Low-voltage Detection Circuit

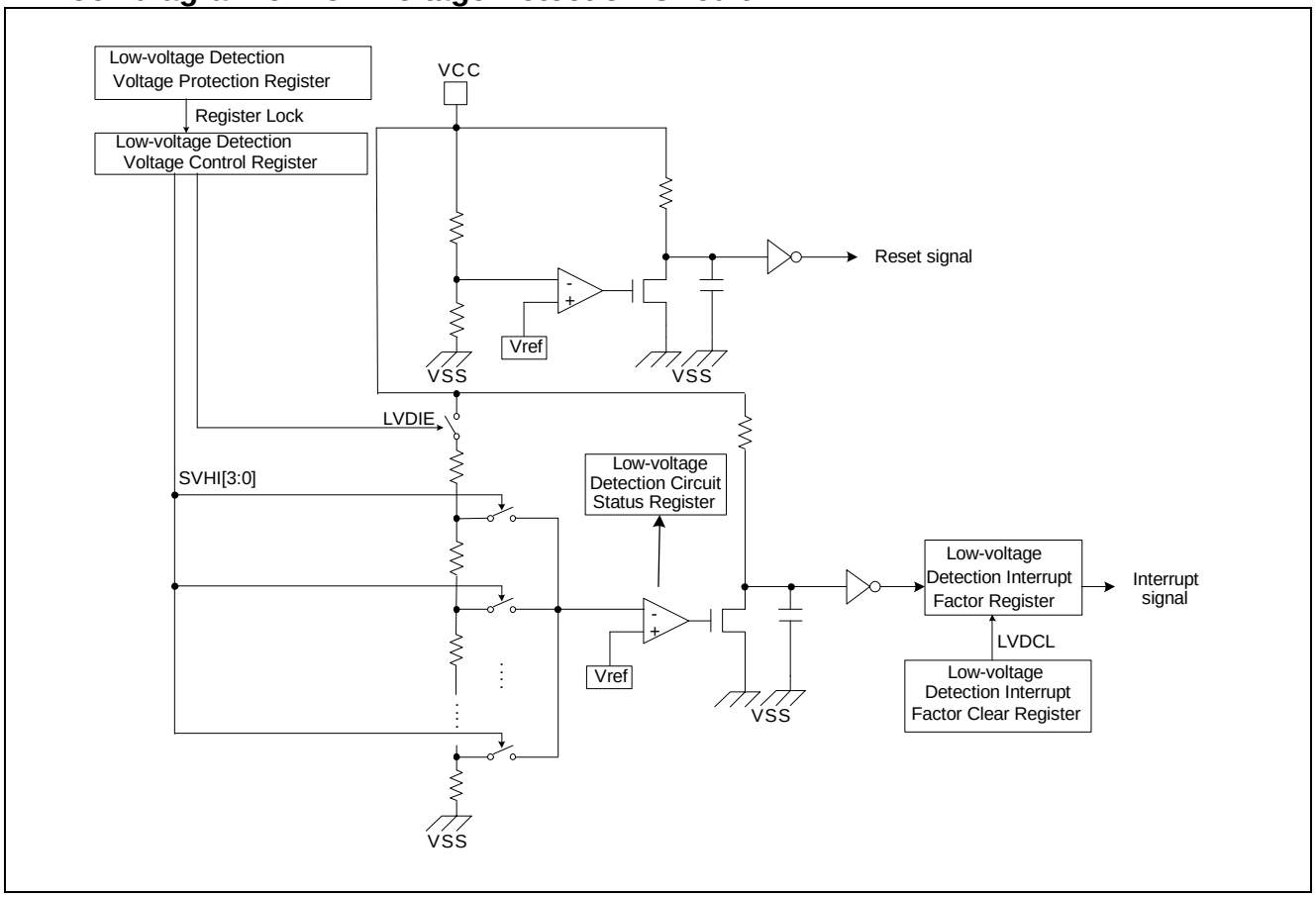

- **Low-voltage Detection Voltage Control Register (LVD_CTL)**
  This register controls whether to enable monitoring the power supply voltage for a low-voltage detection interrupt and specifies the detection voltage for a low-voltage detection interrupt.
- **Low-voltage Detection Voltage Protection Register (LVD_RLR)**
  This register write-protects the Low-voltage Detection Voltage Control Register.
- **Low-voltage Detection Interrupt Factor Register (LVD_STR)**
  This register holds a low-voltage detection interrupt factor.
- **Low-voltage Detection Interrupt Factor Clear Register (LVD_CLR)**
  This register clears a low-voltage detection interrupt factor.
- **Low-voltage Detection Circuit Status Register (LVD_STR2)**
  This register checks the operation status of a low-voltage detection interrupt circuit.

■ Pins of Low-voltage Detection Circuit

The following shows the pins used in the Low-voltage Detection Circuit.

- VCC pin
  The Low-voltage Detection Circuit monitors the power supply voltage of this pin.
- VSS pin
  This pin is a GND pin used as a basis to detect the power supply voltage.

3. Explanation of Operations

This section explains the operations of the Low-Voltage Detection Reset Circuit and the Low-voltage Detection Interrupt Circuit.

■ Operations of Low-Voltage Detection Reset Circuit

● Operations

The Low-Voltage Detection Reset Circuit always enters a monitoring state after power-on. This circuit generates a reset signal when the power supply voltage (VCC) falls below the detection voltage. A reset is released when the power supply voltage exceeds the release voltage.

This circuit is available in standby modes (SLEEP mode, TIMER mode, RTC mode, STOP mode) and deep standby modes (Deep standby RTC mode, Deep standby STOP mode).

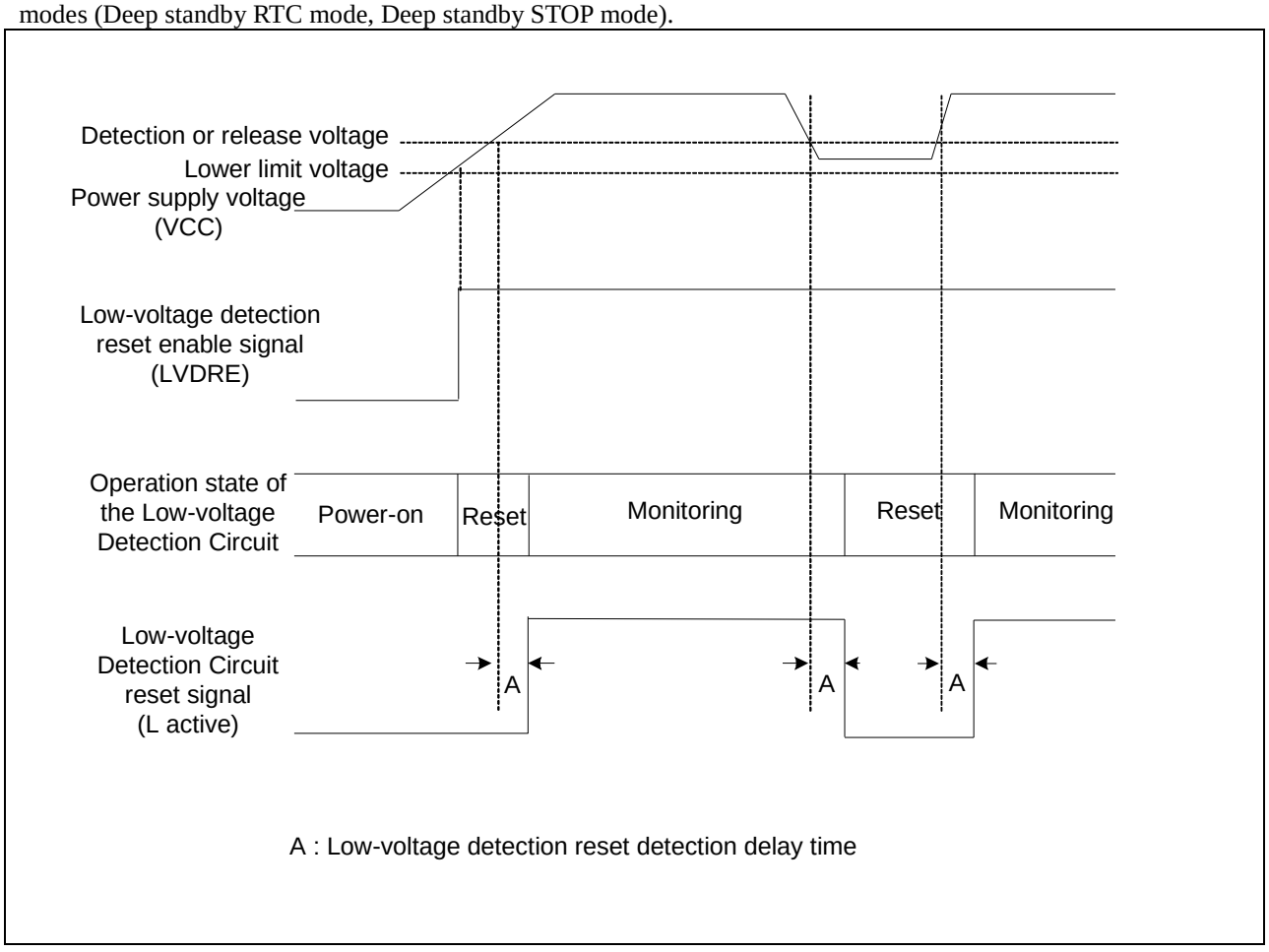

A : Low-voltage detection reset detection delay time

<Note>

For the hysteresis of detection / release voltage of the Low-voltage Detection Circuit, see "Data Sheet" of the product used.

■ Operations of Low-voltage Detection Interrupt Circuit

● Operations

The Low-voltage Detection Interrupt Circuit monitors the power supply voltage (VCC) and generates an interrupt signal when the power supply voltage falls below the specified voltage.
An interrupt request is enabled when "1" is set to the LVDIE bit of the Low-voltage Detection Voltage Control Register. The initial value is set to Not Enable. The interrupt detection voltage can be set by the SVHI bit of the Low-voltage Detection Voltage Control Register. When an interrupt request is enabled and the interrupt detection voltage is specified, the status flag LVDIRDY bit is set to "1" and this circuit starts monitoring the power supply voltage after the stabilization wait time of the Low-voltage Detection Circuit has lapsed.
This circuit is available in standby modes (SLEEP mode, TIMER mode, RTC mode, STOP mode) and deep standby modes (Deep standby RTC mode, Deep standby STOP mode). It is also applicable when the CPU returns from those modes.

● Low-voltage detection interrupt request

When the power supply voltage (VCC) falls below the specified voltage while a low-voltage detection interrupt is effective, "1" is set to the LVDIR bit of the Low-voltage Detection Interrupt Factor Register (LVD_STR) to generate an interrupt request signal.
An interrupt request can be checked by reading the LVDIR bit.

● Canceling a low-voltage detection interrupt request

To cancel a low-voltage detection interrupt request, write "0" to the LVDCL bit of the Low-voltage Detection Interrupt Factor Clear Register (LVD_CLR). This clears a low-voltage detection interrupt factor and cancels a low-voltage detection interrupt request.

Even when the power supply voltage is below the specified detection voltage, an interrupt request is canceled when "0" is written to the LVDCL bit.

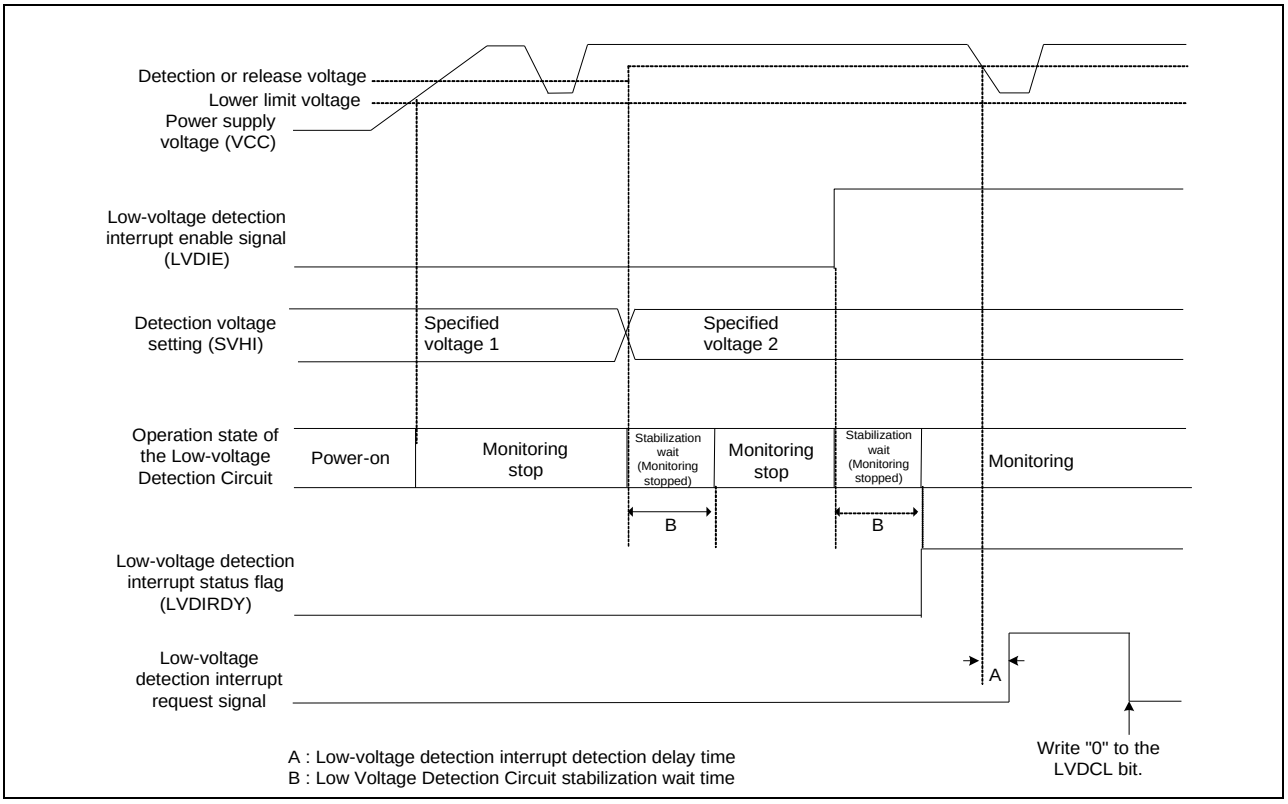

<Note>

- This circuit does not conduct monitoring the power supply voltage if PCLK2 is gated by TIMER mode, RTC mode, STOP mode, Deep standby RTC mode, Deep standby STOP mode, or APB2 Prescaler Register (APBC2_PSR) while waiting for the stabilization of the Low-voltage Detection Circuit. After checking that the status flag LVDIRDY is set to "1", change to the desired mode.
- For the hysteresis of detection / release voltage of the Low-voltage Detection Circuit, see Data Sheet of the product used.

4. Setup Procedure Examples

This section explains the procedures to set up the Low-voltage Detection Circuit, giving examples.

Figure 4-1 Example of Low-voltage detection interrupt setting

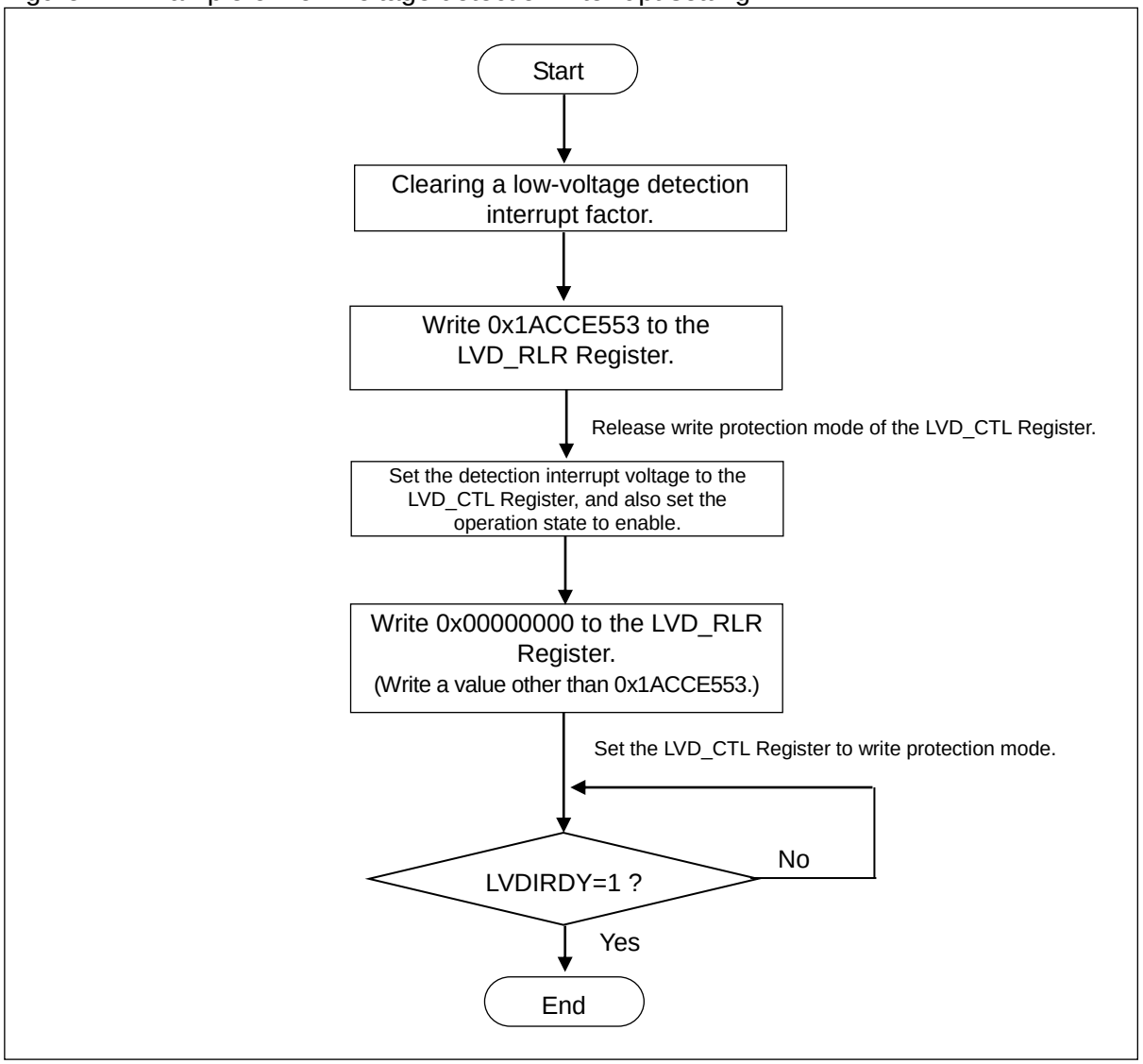

5. Registers

This section explains the configuration and functions of the registers used in the Low-voltage Detection Circuit.

■ List of Low-voltage Detection Circuit Registers

Table 5-1 List of Low-voltage Detection Circuit Registers

Abbreviation	Register name	Reference
LVD_CTL	Low-voltage Detection Voltage Control Register	5.1
LVD_STR	Low-voltage Detection Interrupt Factor Register	5.2
LVD_CLR	Low-voltage Detection Interrupt Factor Clear Register	5.3
LVD_RLR	Low-voltage Detection Voltage Protection Register	5.4
LVD_STR2	Low-voltage Detection Circuit Status Register	5.5

5.1. Low-voltage Detection Voltage Control Register (LVD_CTL)

The Low-voltage Detection Voltage Control Register (LVD_CTL) controls whether to enable monitoring the power supply voltage for a low-voltage detection interrupt and specifies the detection voltage for a low-voltage detection interrupt.

bit	7	6	5	4	3	2	1	0
Field	LVDIE	Reserved	SVHI				Reserved	
Attribute	R/W	-	R/W				-	
Initial value	0	1	0000				00	

[bit7] LVDIE: Low-voltage detection interrupt enable bit

This bit is used to enable monitoring the power supply voltage of a low-voltage detection interrupt. When not enabling monitoring the power supply voltage, the Low-voltage Detection Interrupt Circuit is stopped.

Value	Description
0	Does not enable the generation of a low-voltage detection interrupt. [Initial value]
1	Enables the generation of a low-voltage detection interrupt.

[bit6] Reserved: Reserved bit

The read value is undefined.
Set "1" to this bit.

[bit5:2] SVHI: Low-voltage detection interrupt voltage setting bits

These bits are used to specify the detection voltage of a low-voltage detection interrupt.

Value	Description
0000	Set the low-voltage detection interrupt voltage in the vicinity of 2.8V. [Initial value]
0001	Set the low-voltage detection interrupt voltage in the vicinity of 3.0V.
0010	Set the low-voltage detection interrupt voltage in the vicinity of 3.2V.
0011	Set the low-voltage detection interrupt voltage in the vicinity of 3.6V.
0100	Set the low-voltage detection interrupt voltage in the vicinity of 3.7V.
0101	Setting is prohibited.
0110	Setting is prohibited.
0111	Set the low-voltage detection interrupt voltage in the vicinity of 4.0V.
1000	Set the low-voltage detection interrupt voltage in the vicinity of 4.1V.
1001	Set the low-voltage detection interrupt voltage in the vicinity of 4.2V.
Others	Setting is prohibited.

[bit1:0] Reserved: Reserved bits
The read value is always "0".
These bits have no effect in write mode.

<Notes>

- The low-voltage detection interrupt enable bit (LVDIE) must be enabled after "0" was written to the LVDCL bit of the Low-voltage Detection Interrupt Clear Register (LVD_CLR) to clear the low-voltage detection interrupt factor (LVDIR).
- When the low-voltage detection interrupt enable bit (LVDIE) is not enabled, the Low-voltage Detection Circuit for detecting a low-voltage interrupt is stopped. Therefore, the low-voltage detection interrupt factor bit (LVDIR) is not set.
- The Low-voltage Detection Voltage Control Register (LVD_CTL) is write-protected in the initial state, which makes writing invalid unless write protection mode is released. To write the LVD_CTL Register, set 0x1ACCE553 to the Low-voltage Detection Voltage Protection Register (LVD_RLR) to release write protection mode.
- This register is not initialized by the deep standby transition reset.
- In the case of disabling the CPU returning from a deep standby mode due to the low-voltage detection interrupt, set the WLVDE bit of the Deep Standby Return Enable Register (WIER) and the low-voltage detection interrupt enable bit (LVDIE) to 0, respectively.
- For the accuracy of detection / release voltage of the Low-voltage Detection Circuit, see Data Sheet of the product used.

5.2. Low-voltage Detection Interrupt Factor Register (LVD_STR)

The Low-voltage Detection Interrupt Factor Register (LVD_STR) holds a low-voltage detection interrupt factor.

bit	7	6	5	4	3	2	1	0
Field	LVDIR	Reserved						
Attribute	R	-						
Initial value	0	0000000						

[bit7] LVDIR: Low-voltage detection interrupt factor bit

Value	Description
0	A low-voltage detection interrupt request is not detected. [Initial value]
1	A low-voltage detection interrupt request has been detected.

[bit6:0] Reserved: Reserved bits

The read value is always "0".
These bits have no effect when written.

<Note>

This register is not initialized by the deep standby transition reset.

5.3. Low-voltage Detection Interrupt Factor Clear Register (LVD_CLR)

The Low-voltage Detection Interrupt Factor Clear Register (LVD_CLR) clears a low-voltage detection interrupt factor.

bit	7	6	5	4	3	2	1	0
Field	LVDCL	Reserved						
Attribute	R/W	-						
Initial value	1	0000000						

[bit7] LVDCL: Low-voltage detection interrupt factor clear bit

Value	Description
0	Clears the low-voltage detection interrupt bit of the Low-voltage Detection Interrupt Factor Register (LVD_STR) to "0".
1	Has no effect in write mode. [Initial value]

"1" is always set in read mode.

[bit6:0] Reserved: Reserved bits

The read value is always "0".

These bits have no effect when written.

<Note>

This register is not initialized by the deep standby transition reset.

5.4. Low-voltage Detection Voltage Protection Register (LVD_RLR)

The Low-voltage Detection Voltage Protection Register (LVD_RLR) write-protects the Low-voltage Detection Voltage Control Register (LVD_CTL).

bit	31	30	29	28	27	26	25	24	23	22	21	20	19	18	17	16
Field	LVDLCK[31:16]															
Attribute	R/W															
Initial value	0x0000															

bit	15	14	13	12	11	10	9	8	7	6	5	4	3	2	1	0
Field	LVDLCK[15:0]															
Attribute	R/W															
Initial value	0x0001															

[bit31:0] LVDLCK[31:0]: Low-voltage Detection Voltage Control Register protection bits

- Setting 0x1ACCE553 enables writing the Low-voltage Detection Voltage Control Register (releases write protection mode).
- Setting a value other than 0x1ACCE553 disables writing the Low-voltage Detection Voltage Control Register (enables write protection mode).
- When the Low-voltage Detection Voltage Control Register is not set in write protection mode, 0x00000000 is read.
- When the Low-voltage Detection Voltage Control Register is set in write protection mode, 0x00000001 is read.

<Notes>

- The Low-voltage Detection Voltage Control Register (LVD_CTL) is write-protected in the initial state. To write the LVD_CTL Register, set 0x1ACCE553 to the Low-voltage Detection Voltage Protection Register (LVD_RLR) to release write protection mode.
- To enable write protection mode of the LVD_CTL register, set a value other than 0x1ACCE553 to the Low-voltage Detection Voltage Protection Register (LVD_RLR).
- Once write protection mode is released for the LVD_CTL Register, it remains released until a value other than 0x1ACCE553 is written to the LVD_RLR Register.
- This register is not initialized by the deep standby transition reset.

5.5. Low-voltage Detection Circuit Status Register (LVD_STR2)

The Low-voltage Detection Circuit Status Register (LVD_STR2) checks the operation status of a low-voltage detection interrupt.

bit	7	6	5	4	3	2	1	0
Field	LVDIRDY	Reserved						
Attribute	R	-						
Initial value	0	-						

[bit7] LVDIRDY : Low-voltage detection interrupt status flag

Value	Description
0	Stabilization wait state or monitoring stop state [Initial value]
1	Monitoring state

This bit has no effect in write mode.

[bit6:0] Reserved: Reserved bits

The read value is undefined

These bits have no effect when written.

<Note>

This register is not initialized by the deep standby transition reset.

CHAPTER 5-3: Low-voltage Detection (B)

This chapter explains the functions and operations of the Low-voltage Detection Circuit.

1. Overview
2. Configuration
3. Explanation of Operations
4. Setup Procedure Examples
5. Registers
6. Usage Precautions

1. Overview

The Low-voltage Detection Circuit monitors the power supply voltage, and generates reset and interrupt signals when the power supply voltage falls below the detection voltage.

■ Overview of Low-voltage Detection Circuit

● Operations of Low-voltage Reset Circuit

- This circuit monitors the power supply voltage (VCC) and generates a reset signal when the power supply voltage falls below the specified value.
- This circuit allows selection of whether to enable or stop operations. The initial state is operating.
- This circuit allows specification of the detection voltage.
- This circuit monitors the power supply voltage even in standby modes and deep standby modes.
- This circuit generates a reset signal when the reduction of the power supply voltage is detected in standby modes and deep standby modes.

● Operations of Low-voltage Interrupt Circuit

- This circuit monitors the power supply voltage (VCC) and generates an interrupt signal when the power supply voltage falls below the specified value.
- This circuit allows selection of whether to enable or stop operations. The initial state is set to disable.
- This circuit allows specification of the detection voltage.
- This circuit can be set to low-power mode.
- This circuit can monitor the power supply voltage even in standby modes and deep standby modes.
- This circuit returns from standby mode and deep standby modes when the reduction of the power supply voltage is detected in the standby mode and deep standby modes.

<Notes>

- If a low-voltage detection interrupt is enabled or the detection voltage is specified for a low-voltage detection interrupt, this circuit starts VCC voltage monitoring after the stabilization wait time of the Low-voltage Detection Circuit has lapsed.
  For the stabilization wait time of the Low-voltage Detection Circuit, refer to "Data Sheet" of the product used.
- This circuit does not conduct monitoring the power supply voltage if PCLK2 is stopped by TIMER mode, RTC mode, STOP mode, Deep standby RTC mode, Deep standby STOP mode, or APB2 Prescaler Register (APBC2_PSR) while waiting for the stabilization of the Low-voltage Detection Circuit. After the status flag is read and the stabilization wait time has lapsed, change to the desired mode.
- The Low-voltage Detection Voltage Control Register (LVD_CTL) is write-protected to prevent a writing error. To release write protection mode, write 0x1ACCE553 to the Low-voltage Detection Voltage Protection Register (LVD_RLR).

2. Configuration

This section shows the block diagram of the Low-voltage Detection Circuit.

■ Block diagram of Low-voltage Detection Circuit

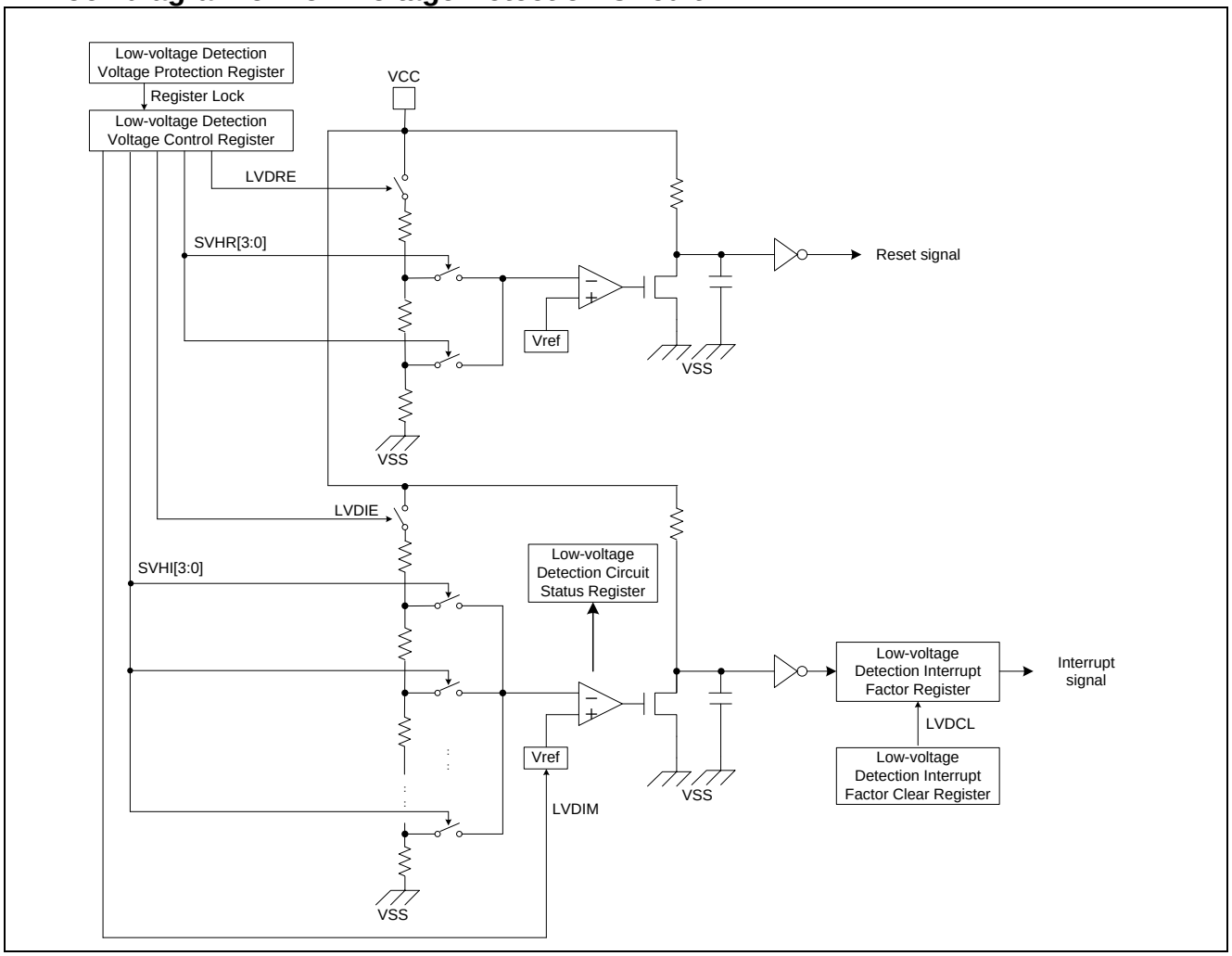

- **Low-voltage Detection Voltage Control Register (LVD_CTL)**
  This register controls whether to enable monitoring the power supply voltage for a low-voltage detection reset and low-voltage detection interrupt, specifies the detection voltage for a low-voltage detection reset and low-voltage detection interrupt, and sets the low-power mode of a low-voltage detection interrupt.
- **Low-voltage Detection Voltage Protection Register (LVD_RLR)**
  This register write-protects the Low-voltage Detection Voltage Control Register.
- **Low-voltage Detection Interrupt Factor Register (LVD_STR)**
  This register holds a low-voltage detection interrupt factor.
- **Low-voltage Detection Interrupt Factor Clear Register (LVD_CLR)**
  This register clears a low-voltage detection interrupt factor.

● Low-voltage Detection Circuit Status Register (LVD_STR2)

This register checks the operation status of a low-voltage detection interrupt circuit.

■ Pins of Low-voltage Detection Circuit

The following shows the pins used in the Low-voltage Detection Circuit.

- VCC pin
  The Low-voltage Detection Circuit monitors the power supply voltage of this pin.
- VSS pin
  This pin is a GND pin used as a basis to detect the power supply.

3. Explanation of Operations

This section explains the operations of the Low-Voltage Detection Reset Circuit and the Low-voltage Detection Interrupt Circuit.

■ Operations of Low-Voltage Detection Reset Circuit

● Explanation of Circuit Operation

The Low-Voltage Detection Reset Circuit enters a monitoring state after power-on. This circuit generates a reset signal when the specified power supply voltage (VCC) falls below the detection voltage. A reset is released when the power supply voltage exceeds the release voltage.

Reset operation is valid only when LVDRE bit of Low-voltage Detection Voltage Control Register (LVD_CTL) is "1". Detection voltage of the reset can be set by SVHR bit of Low-voltage Detection Voltage Control Register (LVD_CTL). When reset enable and reset detection voltage are set, Low-voltage detection reset status flag (LVDRRDY) of Low-voltage Detection Circuit Status Register (LVD_STR2) becomes "1" and starts power supply voltage monitoring after the stabilization wait period for the low-voltage detection circuit lapses.

This circuit is available in standby modes (SLEEP mode, TIMER mode, RTC mode, STOP mode) and deep standby modes (Deep standby RTC mode, Deep standby STOP mode).

If low-voltage detection interrupt is valid (LVDIE = 1) and it is in low power mode (LVDIM = 1), the operation of low-voltage detection reset stops while in low speed CR timer mode, sub timer mode, RTC mode, stop mode, deep standby RTC mode, and deep standby stop mode.

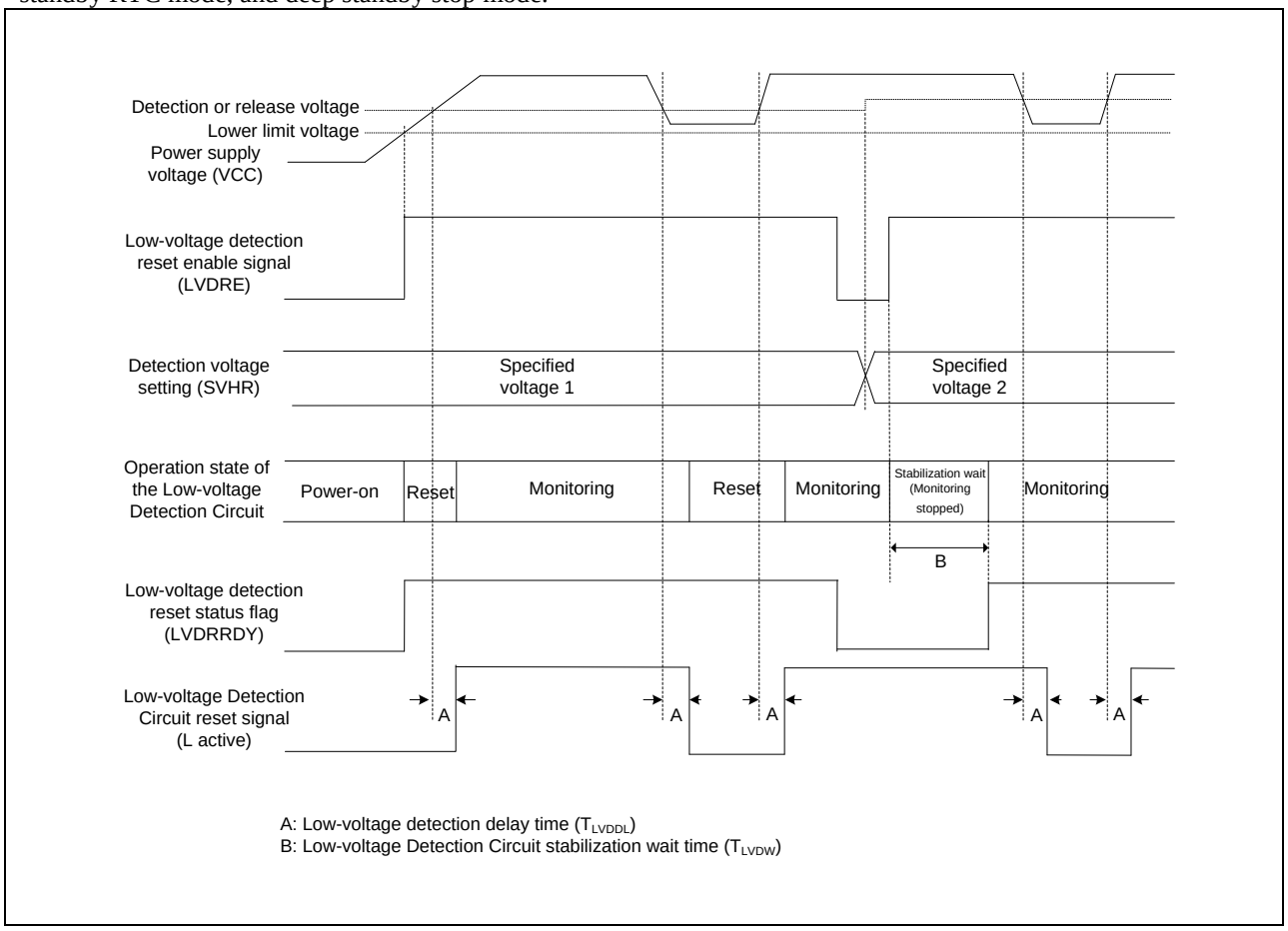

<Note>

For the hysteresis of detection / release voltage of the Low-voltage Detection Circuit, see "Data Sheet" of the product used.

■ Operations of Low-voltage Detection Interrupt Circuit

● Explanation of Circuit Operation

The Low-voltage Detection Interrupt Circuit monitors the power supply voltage (VCC) and generates an interrupt signal when the power supply voltage falls below the specified value.

An interrupt request is enabled when "1" is set to the LVDIE bit of the Low-voltage Detection Voltage Control Register (LVD_CTL). The initial value is set to Not Enable ("0"). The interrupt detection voltage can be set by the SVHI bit of the Low-voltage Detection Voltage Control Register (LVD_CTL). When an interrupt request is enabled and the interrupt detection voltage and the low-power mode selection are specified, Low-voltage detection interrupt status flag (LVDIRDY) of Low-voltage Detection Circuit Status Register (LVD_STR2) is set to "1" and this circuit starts monitoring the power supply voltage after the stabilization wait time of the Low-voltage Detection Circuit has lapsed.

This circuit is available in standby modes: SLEEP, TIMER, RTC, and STOP modes and deep standby modes: deep standby RTC mode and deep standby stop mode. It is also applicable when the CPU returns from standby mode and deep standby mode.

● Low-voltage detection interrupt request

When the power supply voltage (VCC) falls below the specified voltage while a low-voltage detection interrupt is effective, "1" is set to the LVDIR bit of the Low-voltage Detection Interrupt Factor Register (LVD_STR) to generate an interrupt request signal.

An interrupt request can be checked by reading the LVDIR bit.

● Canceling a low-voltage detection interrupt request

To cancel a low-voltage detection interrupt request, write "0" to the LVDCL bit of the Low-voltage Detection Interrupt Factor Clear Register (LVD_CLR). This clears a low-voltage detection interrupt factor and cancels a low-voltage detection interrupt request.

Even when the power supply voltage is below the specified detection voltage, an interrupt request is canceled when "0" is written to the LVDCL bit.

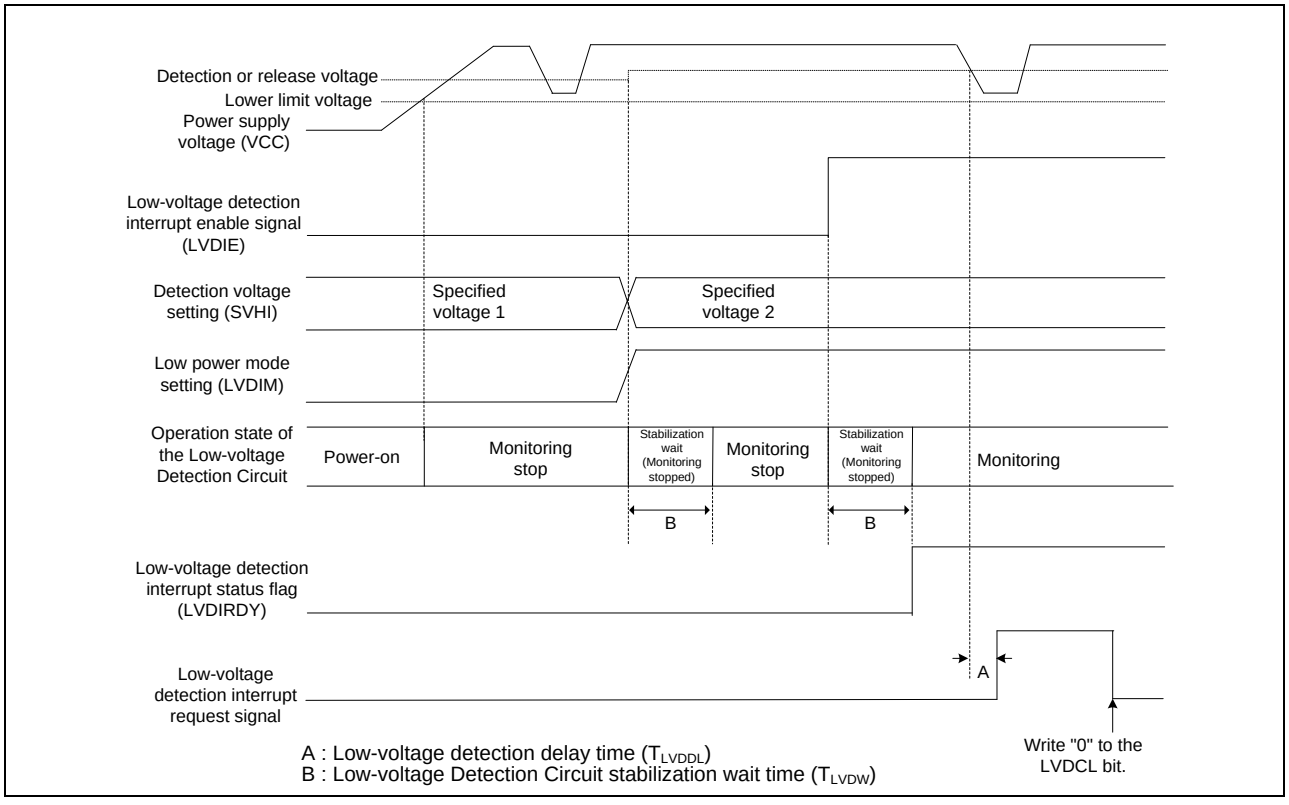

Low Power Mode

In low-speed CR timer mode, sub-timer mode, RCT mode, STOP mode, Deep standby DTC mode, and Deep standby STOP mode, the operation voltage of Low-voltage Detection interrupt can be reduced by selecting the Low-power mode. In other modes, the operation voltage is the same as that in Normal mode even by selecting the Low-power mode.

When LVDIE=1 and LVDIM=1of the Low-voltage Detection Voltage Control Register (LVD_CTL), in low-speed CR timer mode, sub-timer mode, RCT mode, STOP mode, Deep standby DTC mode, and Deep standby STOP mode, the operation of Low-voltage detection reset is disabled.

For the setting combination of Low-voltage detection reset and Low-voltage detection interrupt, see Table 3-1.

Table 3-1 Setting Combination of Low-voltage Detection Reset and Low-voltage Detection Interrupt

Operation Mode	LVDRE	LVDIE	LVDIM	Low-voltage Detection Reset	Low-voltage Detection Interrupt
Low-speed CR timer mode Sub-timer mode, RCT mode, STOP mode, Deep standby RTC mode Deep standby STOP mode	1	0	-	Enabled	Disabled
	1	1	0	Enabled	Normal mode operation
	0	1	0	Disabled	Normal mode operation
	-	1	1	Disabled	Low-power mode operation
Modes other than the above	1	0	-	Enabled	Disabled
	1	1	0	Enabled	Normal mode operation
	0	1	0	Disabled	Normal mode operation
	1	1	1	Enabled	Low-power mode operation*
	0	1	1	Disabled	Low-power mode operation*

*: The operation voltage is the same as that in Normal mode.

<Note>

- This circuit does not conduct monitoring the power supply voltage if PCLK2 is stopped by TIMER mode, RTC mode, STOP mode, Deep standby RTC mode, Deep standby STOP modes or APB2 Prescaler Register (APB2_PSR) while waiting for the stabilization of the Low-voltage Detection Circuit. After checking that Low-voltage detection interrupt status flag (LVDIRDY) of Low-voltage Detection Circuit Status Register (LVD_STR2) is set to "1", change to the desired mode.
- For the hysteresis of detection / release voltage of the Low-voltage Detection Circuit, see Data Sheet of the product used.

4. Setup Procedure Examples

This section explains the procedures to set up the Low-voltage Detection Circuit, giving examples.

Figure 4-1 Setting procedure example for low-voltage detection reset

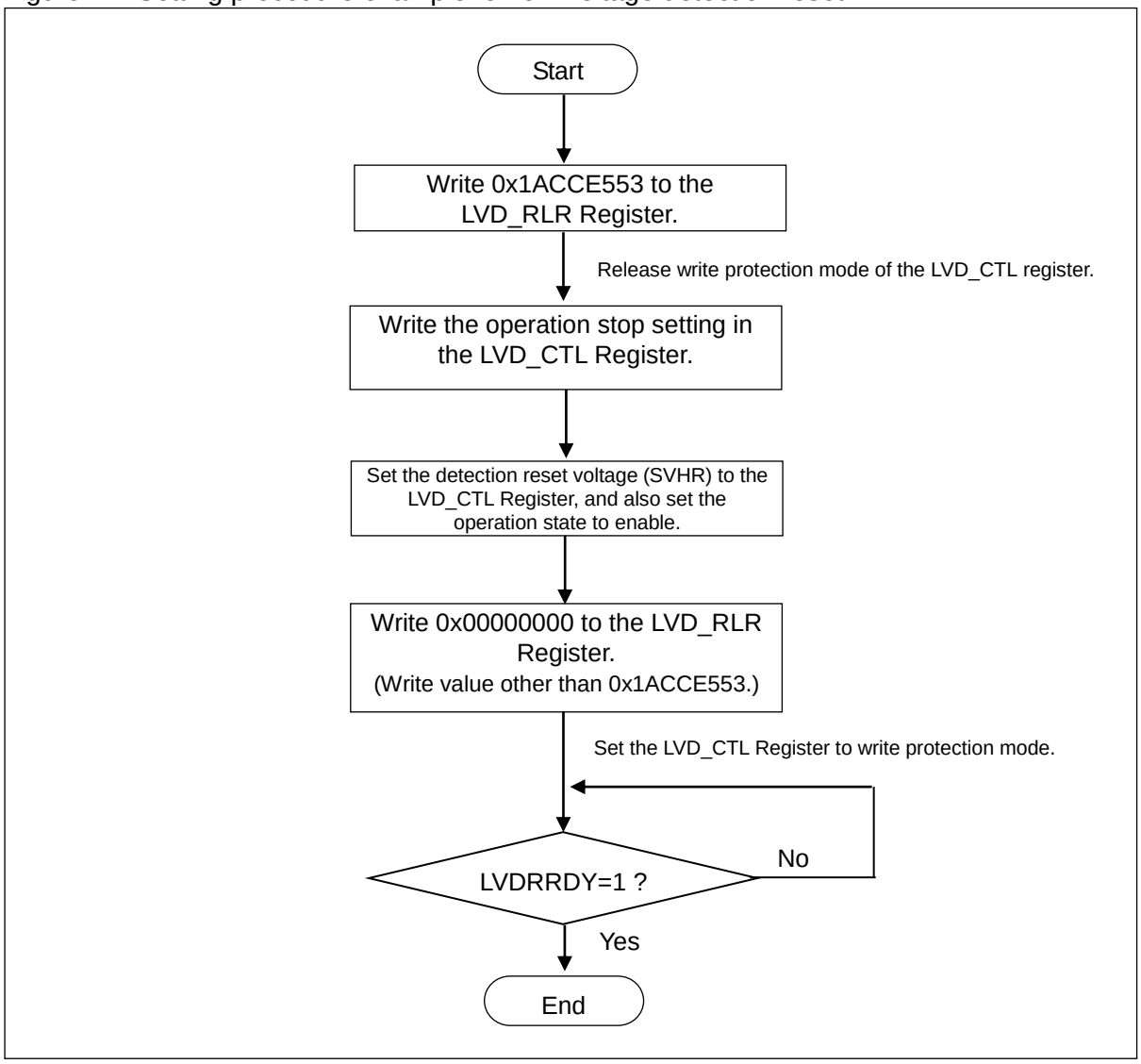

Figure 4-2 Setting procedure example for low-voltage detection interrupt

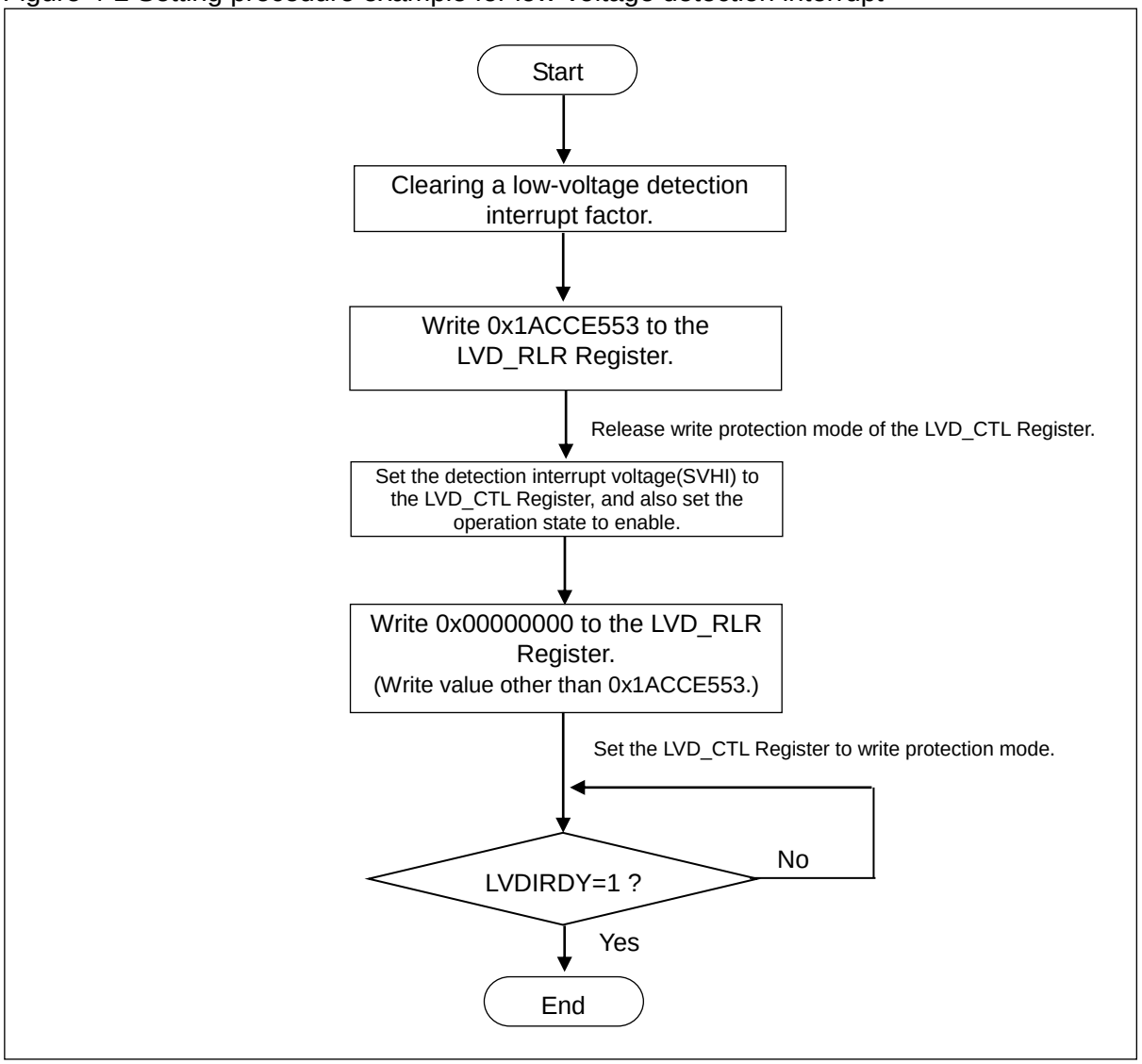

5. Registers

This section explains the configuration and functions of the registers used in the Low-voltage Detection Circuit.

■ List of Low-voltage Detection Circuit Registers

Table 5-1 List of Low-voltage Detection Circuit Register

Abbreviation	Register name	Reference
LVD_CTL	Low-voltage Detection Voltage Control Register	5.1
LVD_STR	Low-voltage Detection Interrupt Factor Register	5.2
LVD_CLR	Low-voltage Detection Interrupt Factor Clear Register	5.3
LVD_RLR	Low-voltage Detection Voltage Protection Register	5.4
LVD_STR2	Low-voltage Detection Circuit Status Register	5.5

5.1. Low-voltage Detection Voltage Control Register (LVD_CTL)

The Low-voltage Detection Voltage Control Register (LVD_CTL) controls whether to enable monitoring the power supply voltage for low-voltage detection reset and a low-voltage detection interrupt and specifies the detection voltage for low-voltage detection reset and a low-voltage detection interrupt and selects the mode of low voltage detection interrupt.

bit	15	14	13	12	11	10	9	8
Field	LVDRE	Reserved	SVHR				Reserved	
Attribute	R/W	-	R/W				-	
Initial value	1	0	0001				00	

bit	7	6	5	4	3	2	1	0
Field	LVDIE	Reserved	SVHI				LVDIM	Reserved
Attribute	R/W	-	R/W				R/W	-
Initial value	0	0	0000				0	0

[bit15] LVDRE: Low-voltage detection reset operation enable bit

This bit enables operation of power supply voltage monitoring of low-voltage detection reset. If it is not enabled, the low-voltage detection reset circuit stops operating.

Value	Description
0	Generation of low-voltage detection reset is not enabled.
1	Generation of low-voltage detection reset is enabled. [initial value]

[bit14] Reserved: Reserved bit

The read value is always "0".

This bit has no effect on the operation when written.

[bit13:10] SVHR: Low-voltage detection reset voltage setting bits

These bits set detection voltage of low-voltage detection reset.

Value	Description
0001	The voltage of low-voltage detection reset is set around 1.53 V. [Initial value]
0100	The voltage of low-voltage detection reset is set around 1.93 V.
Other than the above	Setting is prohibited.

[bit9:8] Reserved: Reserved bits

The read value is always "0".

These bits have no effect on the operation when written.

[bit7] LVDIE: Low-voltage detection interrupt enable bit

This bit is used to enable monitoring the power supply voltage of a low-voltage detection interrupt. When not enabling monitoring the power supply voltage, the Low-voltage Detection Interrupt Circuit is stopped.

Value	Description
0	Does not enable the generation of a low-voltage detection interrupt. [Initial value]
1	Enables the generation of a low-voltage detection interrupt.

[bit6] Reserved: Reserved bit

The read value is undefined.

This bit has no effect on the operation when written.

[bit5:2] SVHI: Low-voltage detection interrupt voltage setting bits

These bits are used to specify the detection voltage of a low-voltage detection interrupt.

Value	Description
0000	Set the low-voltage detection interrupt voltage in the vicinity of 2.0 V. [Initial value]
0001	Set the low-voltage detection interrupt voltage in the vicinity of 2.1 V.
0010	Set the low-voltage detection interrupt voltage in the vicinity of 2.2 V.
0011	Set the low-voltage detection interrupt voltage in the vicinity of 2.3 V.
0100	Set the low-voltage detection interrupt voltage in the vicinity of 2.4 V.
0101	Set the low-voltage detection interrupt voltage in the vicinity of 2.5 V.
0110	Set the low-voltage detection interrupt voltage in the vicinity of 2.6 V.
0111	Set the low-voltage detection interrupt voltage in the vicinity of 2.8 V.
1000	Set the low-voltage detection interrupt voltage in the vicinity of 3.0 V.
1001	Set the low-voltage detection interrupt voltage in the vicinity of 3.2 V.
1010	Set the low-voltage detection interrupt voltage in the vicinity of 3.6 V.
1011	Set the low-voltage detection interrupt voltage in the vicinity of 3.7 V.
1100	Set the low-voltage detection interrupt voltage in the vicinity of 4.0 V.
1101	Set the low-voltage detection interrupt voltage in the vicinity of 4.1 V.
1110	Set the low-voltage detection interrupt voltage in the vicinity of 4.2 V.
1111	Setting is prohibited.

[bit1] LVDIM: Low-voltage detection interrupt low power mode select bit

This bit selects low-voltage detection interrupt mode.

Value	Description
0	Normal mode [Initial value]
1	Low power mode

[bit0] Reserved: Reserved bit

The read value is always "0".

Set "0" to this bit.

<Notes>

- The low-voltage detection interrupt enable bit (LVDIE) must be enabled after "0" was written to the LVDCL bit of the Low-voltage Detection Interrupt Factor Clear Register (LVD_CLR) to clear the low-voltage detection interrupt factor bit (LVDIR).
- When the low-voltage detection interrupt enable bit (LVDIE) is not enabled, the Low-voltage Detection Circuit for detecting a low-voltage interrupt is stopped. Therefore, the low-voltage detection interrupt factor bit (LVDIR) is not set.
- The Low-voltage Detection Voltage Control Register (LVD_CTL) is write-protected in the initial state, which makes writing invalid unless write protection mode is released. To write the Low-voltage Detection Voltage Control Register (LVD_CTL), set 0x1ACCE553 to the Low-voltage Detection Voltage Protection Register (LVD_RLR) to release write protection mode.
- If the LVDIE bit is "1" and LVDIM is "1", operation of low-voltage detection reset stops while in low speed CR timer mode, sub timer mode, RTC mode, STOP mode, deep standby RTC mode, and deep standby STOP mode.
- bit15:8 of this register are initialized by power-on reset. They are not initialized by reset factors other than these resets.
- For the details on low-voltage detection interrupt, low-voltage detection reset detection, and release voltage, see the Data Sheet of product used.
- This register is not initialized by deep standby transition reset.
- In the case of disabling the CPU returning from a deep standby mode due to the low-voltage detection interrupt, set the WLVDE bit of the Deep Standby Return Enable Register (WIER) and the low-voltage detection interrupt enable bit (LVDIE) to 0, respectively.
- For the accuracy of detection / release voltage of the Low-voltage Detection Circuit, see Data Sheet of the product used.

5.2. Low-voltage Detection Interrupt Factor Register (LVD_STR)

The Low-voltage Detection Interrupt Factor Register (LVD_STR) holds a low-voltage detection interrupt factor.

bit	7	6	5	4	3	2	1	0
Field	LVDIR	Reserved						
Attribute	R	-						
Initial value	0	0000000						

[bit7] LVDIR: Low-voltage detection interrupt factor bit

Value	Description
0	A low-voltage detection interrupt request is not detected. [Initial value]
1	A low-voltage detection interrupt request has been detected.

[bit6:0] Reserved: Reserved bits

The read value is always "0".

These bits have no effect on the operation when written.

<Note>

This register is not initialized by deep standby transition reset.

5.3. Low-voltage Detection Interrupt Factor Clear Register (LVD_CLR)

The Low-voltage Detection Interrupt Factor Clear Register (LVD_CLR) clears a low-voltage detection interrupt factor.

bit	7	6	5	4	3	2	1	0
Field	LVDCL	Reserved						
Attribute	R/W	-						
Initial value	1	0000000						

[bit7] LVDCL: Low-voltage detection interrupt factor clear bit

Value	Description
0	Clears the low-voltage detection interrupt factor bit (LVDIR) of the Low-voltage Detection Interrupt Factor Register (LVD_STR) to "0".
1	Has no effect on the operation in write mode. [Initial value]

"1" is always set in read mode.

[bit6:0] Reserved: Reserved bits

The read value is always "0".

These bits have no effect on the operation when written.

<Note>

This register is not initialized by deep standby transition reset.

5.4. Low-voltage Detection Voltage Protection Register (LVD_RLR)

The Low-voltage Detection Voltage Protection Register (LVD_RLR) write-protects the Low-voltage Detection Voltage Control Register (LVD_CTL).

bit	31	30	29	28	27	26	25	24	23	22	21	20	19	18	17	16
Field	LVDLCK[31:16]															
Attribute	R/W															
Initial value	0x0000															

bit	15	14	13	12	11	10	9	8	7	6	5	4	3	2	1	0
Field	LVDLCK[15:0]															
Attribute	R/W															
Initial value	0x0001															

[bit31:0] LVDLCK[31:0]: Low-voltage Detection Voltage Control Register protection bits

- Setting 0x1ACCE553 enables writing the Low-voltage Detection Voltage Control Register (LVD_CTL) (releases write protection mode).
- Setting a value other than 0x1ACCE553 disables writing the Low-voltage Detection Voltage Control Register (LVD_CTL) (enables write protection mode).
- When the Low-voltage Detection Voltage Control Register (LVD_CTL) is not set in write protection mode, 0x00000000 is read.
- When the Low-voltage Detection Voltage Control Register (LVD_CTL) is set in write protection mode, 0x00000001 is read.

<Notes>

- The Low-voltage Detection Voltage Control Register (LVD_CTL) is write-protected in the initial state. To write the LVD_CTL Register, set 0x1ACCE553 to the Low-voltage Detection Voltage Protection Register (LVD_RLR) to release write protection mode.
- To enable write protection mode of the LVD_CTL register, set a value other than 0x1ACCE553 to the LVD_RLR register.
- Once write protection mode is released for the LVD_CTL Register, it remains released until a value other than 0x1ACCE553 is written to the LVD_RLR Register.
- This register is not initialized by deep standby transition reset.

5.5. Low-voltage Detection Circuit Status Register (LVD_STR2)

The Low-voltage Detection Circuit Status Register (LVD_STR2) checks the operation status of a low-voltage detection interrupt.

bit	7	6	5	4	3	2	1	0
Field	LVDIRDY	LVDRRDY	Reserved					
Attribute	R	R	-					
Initial value	0	1	000000					

[bit7] LVDIRDY: Low-voltage detection interrupt status flag

Value	Description
0	Stabilization wait state or monitoring stop state [Initial value]
1	Monitoring state

This bit has no effect on the operation in write mode.

[bit6] LVDRRDY: Low-voltage detection reset status flag

Value	Description
0	Stabilization wait state or monitoring stop state
1	Monitoring state [Initial value]

This bit has no effect on the operation in write mode.

[bit5:0] Reserved: Reserved bits

The read value is always "0".

These bits have no effect on the operation in write mode.

<Note>

This register is not initialized by deep standby transition reset.

6. Usage Precautions

This section explains the precautions for using the low-voltage detection circuit.

- Low-voltage detection interrupt factor bit at Standby mode transition.

  After clearing low-voltage detection interrupt factor bit (LVD_STR:LVDR), even if the power supply voltage is lower than the detection voltage, an interrupt factor is not generated unless the power supply voltage becomes higher than the release voltage once.
  But, after releasing LVDIR, the low-voltage detection circuit is sure to compare the voltage at the transition to Standby mode (timer mode, STOP mode, RTC mode, and Deep standby STOP mode) while the voltage is lower than the detection voltage.
  Therefore, by the standby mode transition, the low-voltage detection interrupt factor is set again, and the transit to the interrupt routine may be executed.

  For example, in the routine of low-voltage detection interrupt process, the interrupt factor is cleared and the interrupt routine is exited. Then, after transited to Stop mode, the low-voltage interrupt factor bit is set to execute the voltage comparison again. So, the repetition of interrupt process routine after exiting from STOP mode may be executed.

  When the power supply voltage is lower than the detection voltage after low-voltage interrupt detection, disable the low-voltage detection interrupt enable bit (LVDIE) and exit the interrupt routine to prevent the repeated occurrence of interrupts.

CHAPTER 5-4: Low-voltage Detection (C)

This chapter explains the functions and operations of the Low-voltage Detection Circuit(C).

1. Overview
2. Configuration
3. Explanation of Operations
4. Setup Procedure Examples
5. Registers
6. Usage Precautions

1. Overview

The Low-voltage Detection Circuit monitors the power supply voltage, and generates reset and interrupt signals when the power supply voltage falls below the detection voltage.

■ Overview of Low-voltage Detection Circuit

● Operations of Low-voltage Reset Circuit

- This circuit monitors the power supply voltage (VCC) and generates a reset signal when the power supply voltage falls below the specified value.
- This circuit allows selection of whether to enable or stop operations. The initial state is operating.
- This circuit allows specification of the detection voltage. However, when the low-voltage reset is generated, the set value is initialized. So, the release voltage becomes the initial value. If the power supply voltage is higher than the release voltage, the reset is released.
- This circuit monitors the power supply voltage even in standby modes and deep standby modes.
- This circuit generates a reset signal when the reduction of the power supply voltage is detected in standby modes and deep standby modes.

● Operations of Low-voltage Interrupt Circuit

- This circuit monitors the power supply voltage (VCC) and generates an interrupt signal when the power supply voltage falls below the specified value.
- This circuit allows selection of whether to enable or stop operations. The initial state is set to disable.
- This circuit allows specification of the detection voltage.
- This circuit can monitor the power supply voltage even in standby modes and deep standby modes.
- This circuit returns from standby mode and deep standby modes when the reduction of the power supply voltage is detected in the standby mode and deep standby modes.

<Notes>

- If a low-voltage detection interrupt is enabled or the detection voltage is specified for a low-voltage detection interrupt, this circuit starts VCC voltage monitoring after the stabilization wait time of the Low-voltage Detection Circuit has lapsed.
  For the stabilization wait time of the Low-voltage Detection Circuit, refer to "Data Sheet" of the product used.
- This circuit does not conduct monitoring the power supply voltage if PCLK2 is stopped by TIMER mode, RTC mode, STOP mode, Deep standby RTC mode, Deep standby STOP mode, or APB2 Prescaler Register (APBC2_PSR) while waiting for the stabilization of the Low-voltage Detection Circuit. After the status flag is read and the stabilization wait time has lapsed, change to the desired mode.
- The Low-voltage Detection Voltage Control Register (LVD_CTL) is write-protected to prevent a writing error. To release write protection mode, write 0x1ACCE553 to the Low-voltage Detection Voltage Protection Register (LVD_RLR).

2. Configuration

This section shows the block diagram of the Low-voltage Detection Circuit.

■ Block diagram of Low-voltage Detection Circuit

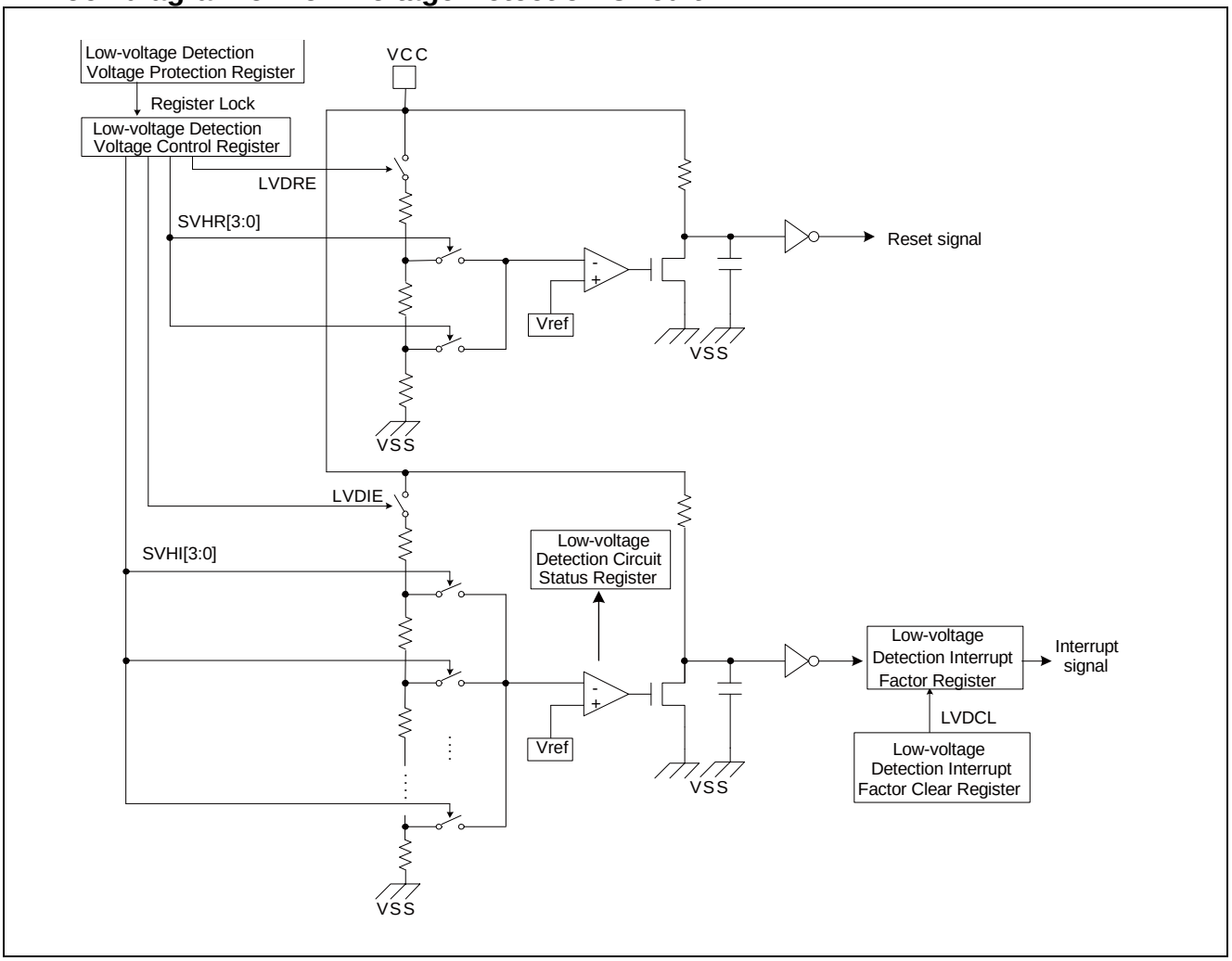

- **Low-voltage Detection Voltage Control Register (LVD_CTL)**
  This register controls whether to enable monitoring the power supply voltage for a low-voltage detection reset and low-voltage detection interrupt, and specifies the detection voltage for a low-voltage detection reset and low-voltage detection interrupt.
- **Low-voltage Detection Voltage Protection Register (LVD_RLR)**
  This register write-protects the Low-voltage Detection Voltage Control Register.
- **Low-voltage Detection Interrupt Factor Register (LVD_STR)**
  This register holds a low-voltage detection interrupt factor.
- **Low-voltage Detection Interrupt Factor Clear Register (LVD_CLR)**
  This register clears a low-voltage detection interrupt factor.

● Low-voltage Detection Circuit Status Register (LVD_STR2)

This register checks the operation status of a low-voltage detection interrupt circuit.

■ Pins of Low-voltage Detection Circuit

The following shows the pins used in the Low-voltage Detection Circuit.

- VCC pin
  The Low-voltage Detection Circuit monitors the power supply voltage of this pin.
- VSS pin
  This pin is a GND pin used as a basis to detect the power supply.

3. Explanation of Operations

This section explains the operations of the Low-Voltage Detection Reset Circuit and the Low-voltage Detection Interrupt Circuit.

■ Operations of Low-Voltage Detection Reset Circuit

● Explanation of Circuit Operation

The Low-Voltage Detection Reset Circuit enters a monitoring state after power-on. This circuit generates a reset signal when the specified power supply voltage (VCC) falls below the detection voltage. A reset is released when the power supply voltage exceeds the release voltage.

Reset operation is valid only when LVDRE bit of Low-voltage Detection Voltage Control Register (LVD_CTL) is "1". Detection voltage of the reset can be set by SVHR bit of Low-voltage Detection Voltage Control Register (LVD_CTL). However, SVHR bit is initialized by the low-voltage detection reset. So, the release voltage becomes the initial value. If the power supply voltage is higher than the release voltage, the reset is released. When reset enable and reset detection voltage are set, Low-voltage detection reset status flag (LVDRRDY) of Low-voltage Detection Circuit Status Register (LVD_STR2) becomes "1" and starts power supply voltage monitoring after the stabilization wait period for the low-voltage detection circuit lapses.

This circuit is available in standby modes (SLEEP mode, TIMER mode, RTC mode, STOP mode) and deep standby modes (Deep standby RTC mode, Deep standby STOP mode).

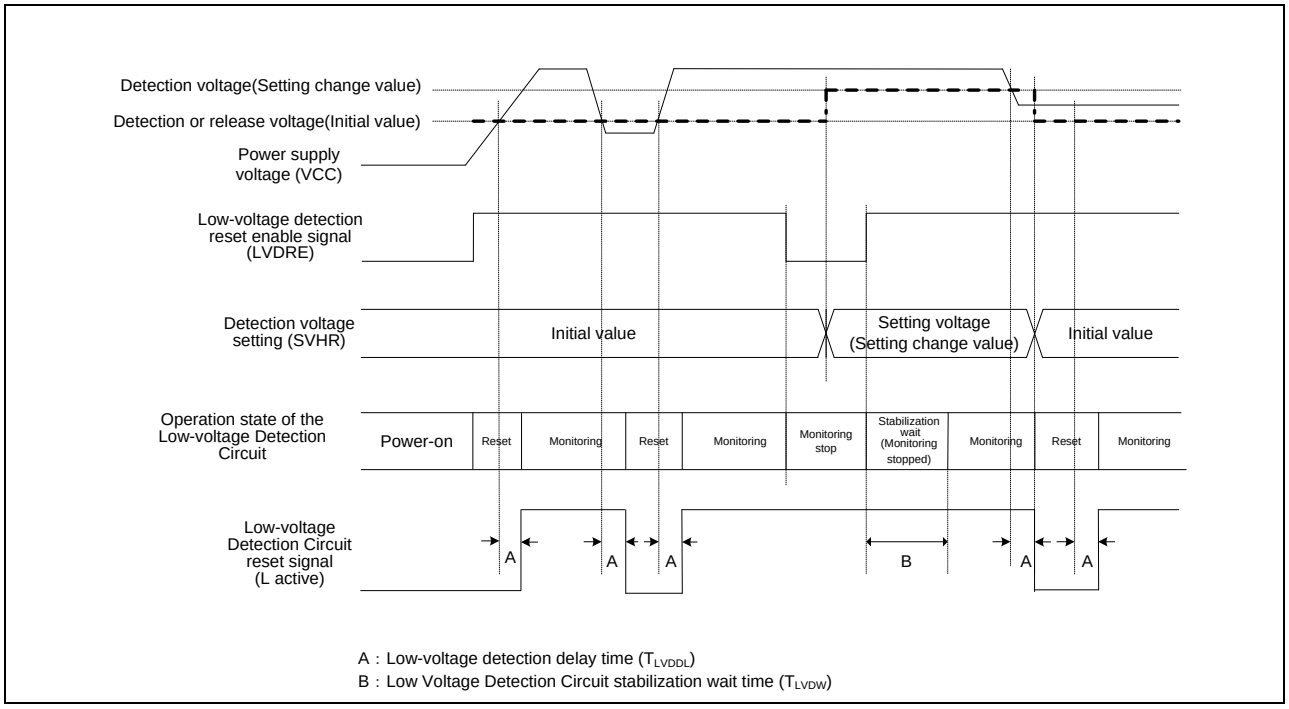

<Note>

For the hysteresis of detection / release voltage of the Low-voltage Detection Circuit, see "Data Sheet" of the product used.

■ Operations of Low-voltage Detection Interrupt Circuit

● Explanation of Circuit Operation

The Low-voltage Detection Interrupt Circuit monitors the power supply voltage (VCC) and generates an interrupt signal when the power supply voltage falls below the specified value.
An interrupt request is enabled when "1" is set to the LVDIE bit of the Low-voltage Detection Voltage Control Register (LVD_CTL). The initial value is set to Not Enable ("0"). The interrupt detection voltage can be set by the SVHI bit of the Low-voltage Detection Voltage Control Register (LVD_CTL). When an interrupt request is enabled and the interrupt detection voltage is specified, Low-voltage detection interrupt status flag (LVDIRDY) of Low-voltage Detection Circuit Status Register (LVD_STR2) is set to "1" and this circuit starts monitoring the power supply voltage after the stabilization wait time of the Low-voltage Detection Circuit has lapsed.
This circuit is available in standby modes (SLEEP mode, TIMER mode, RTC mode, STOP mode) and deep standby modes (Deep standby RTC mode, Deep standby STOP mode). It is also applicable when the CPU returns from those modes.

● Low-voltage detection interrupt request

When the power supply voltage (VCC) falls below the specified voltage while a low-voltage detection interrupt is effective, "1" is set to the LVDIR bit of the Low-voltage Detection Interrupt Factor Register (LVD_STR) to generate an interrupt request signal.
An interrupt request can be checked by reading the LVDIR bit.

● Canceling a low-voltage detection interrupt request

To cancel a low-voltage detection interrupt request, write "0" to the LVDCL bit of the Low-voltage Detection Interrupt Factor Clear Register (LVD_CLR). This clears a low-voltage detection interrupt factor and cancels a low-voltage detection interrupt request.
Even when the power supply voltage is below the specified detection voltage, an interrupt request is canceled when "0" is written to the LVDCL bit.

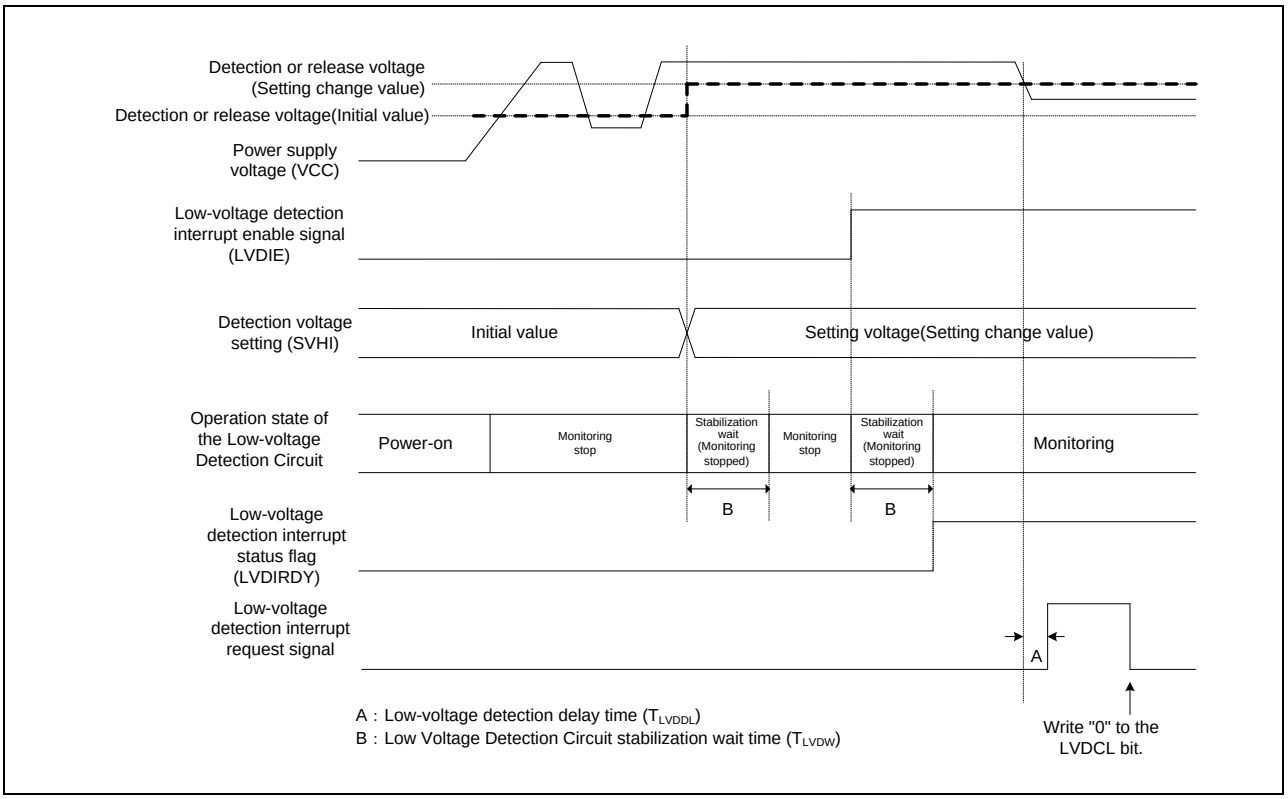

<Note>

- This circuit does not conduct monitoring the power supply voltage if PCLK2 is stopped by TIMER mode, RTC mode, STOP mode, Deep standby RTC mode, Deep standby STOP mode or APB2 Prescaler Register (APB2_PSR) while waiting for the stabilization of the Low-voltage Detection Circuit. After checking that Low-voltage detection interrupt status flag (LVDIRDY) of Low-voltage Detection Circuit Status Register (LVD_STR2) is set to "1", change to the desired mode.
- For the hysteresis of detection / release voltage of the Low-voltage Detection Circuit, see Data Sheet of the product used.

4. Setup Procedure Examples

This section explains the procedures to set up the Low-voltage Detection Circuit, giving examples.

Figure 4-1 Setting procedure example for low-voltage detection reset

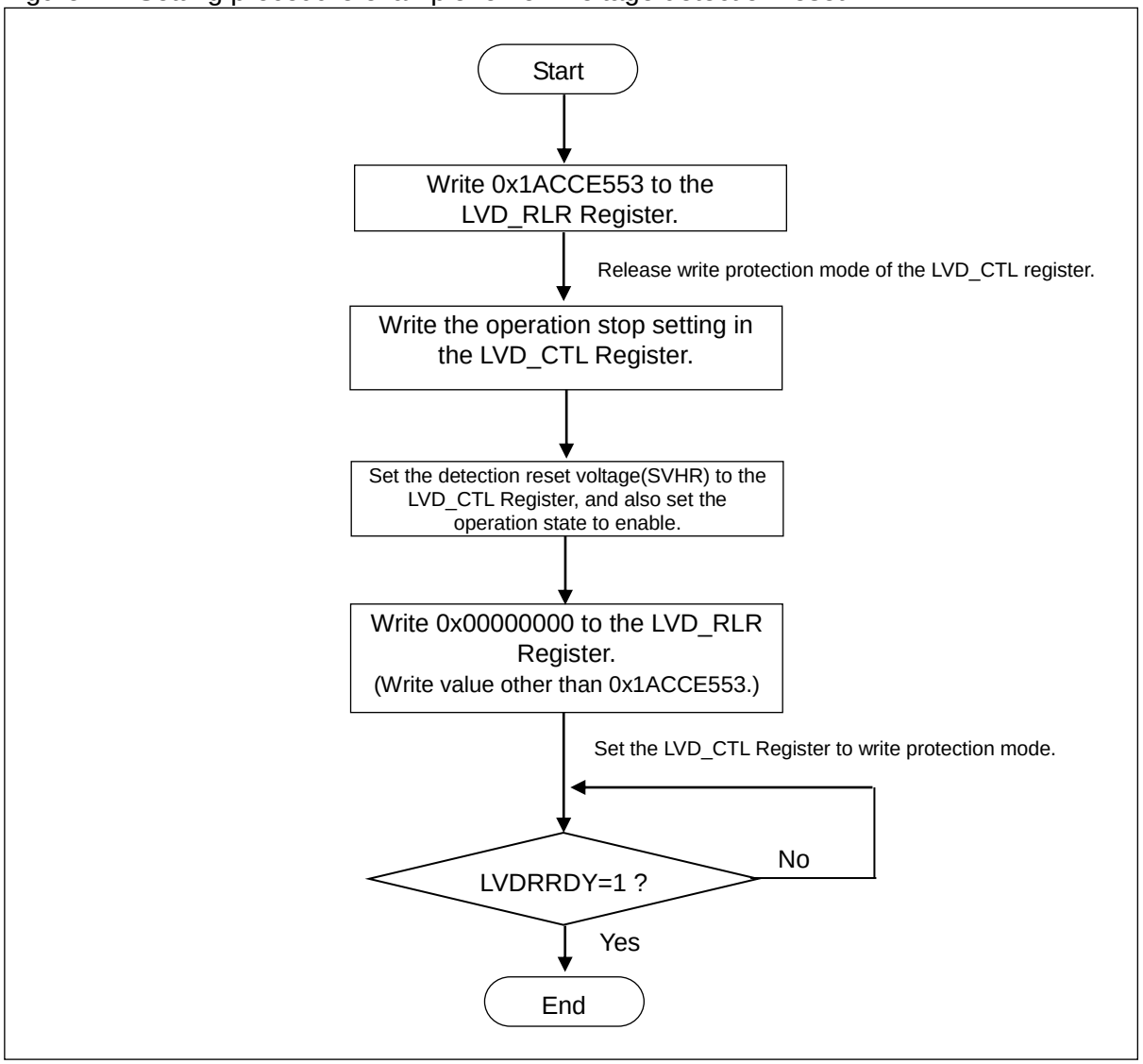

Figure 4-2 Setting procedure example for low-voltage detection interrupt

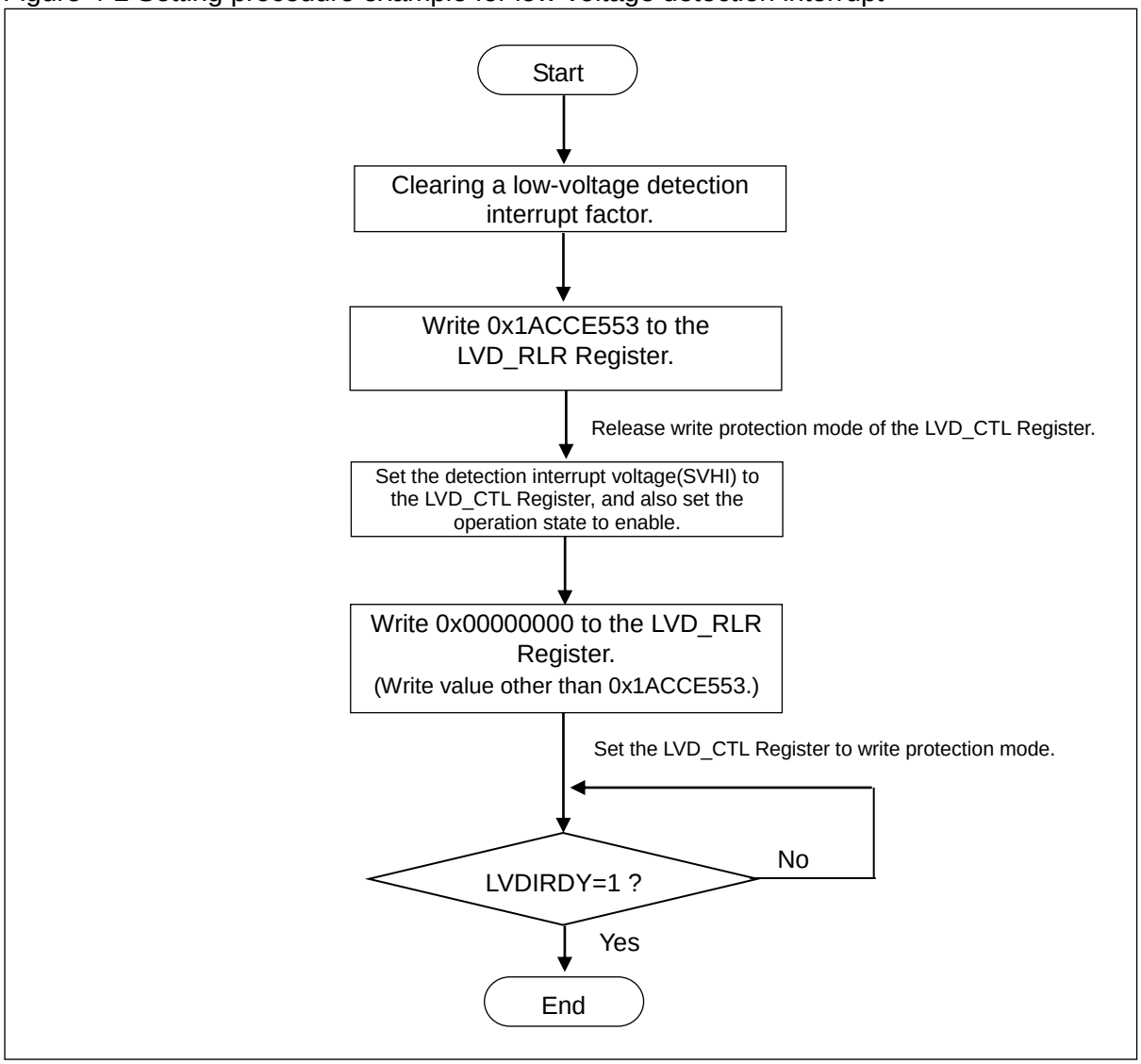

5. Registers

This section explains the configuration and functions of the registers used in the Low-voltage Detection Circuit.

■ List of Low-voltage Detection Circuit Registers

Table 5-1 List of Low-voltage Detection Circuit Register

Abbreviation	Register name	Reference
LVD_CTL	Low-voltage Detection Voltage Control Register	5.1
LVD_STR	Low-voltage Detection Interrupt Factor Register	5.2
LVD_CLR	Low-voltage Detection Interrupt Factor Clear Register	5.3
LVD_RLR	Low-voltage Detection Voltage Protection Register	5.4
LVD_STR2	Low-voltage Detection Circuit Status Register	5.5

5.1. Low-voltage Detection Voltage Control Register (LVD_CTL)

The Low-voltage Detection Voltage Control Register (LVD_CTL) controls whether to enable monitoring the power supply voltage for low-voltage detection reset and a low-voltage detection interrupt and specifies the detection voltage for low-voltage detection reset and a low-voltage detection interrupt. The setting of SVHR and SHVI differ by product TYPE.

■ TYPE6 and TYPE8 products

bit	15	14	13	12	11	10	9	8
Field	LVDRE	SVHR					Reserved	
Attribute	R/W	R/W					-	
Initial value	1	00000					00	

bit	7	6	5	4	3	2	1	0
Field	LVDIE	SVHI					Reserved	
Attribute	R/W	R/W					-	
Initial value	0	00100					00	

■ TYPE9 to TYPE12 products

bit	15	14	13	12	11	10	9	8
Field	LVDRE	SVHR					Reserved	
Attribute	R/W	R/W					-	
Initial value	1	00000					00	

bit	7	6	5	4	3	2	1	0
Field	LVDIE	SVHI					Reserved	
Attribute	R/W	R/W					-	
Initial value	0	00011					00	

[bit15] LVDRE: Low-voltage detection reset operation enable bit

This bit enables operation of power supply voltage monitoring of low-voltage detection reset. If it is not enabled, the low-voltage detection reset circuit stops operating.

Value	Description
0	Generation of low-voltage detection reset is not enabled.
1	Generation of low-voltage detection reset is enabled. [initial value]

[bit14:10] SVHR: Low-voltage detection reset voltage setting bits

These bits set detection voltage of low-voltage detection reset.

- TYPE6 and TYPE8 products

Value	Description
00000	Set the low-voltage detection reset voltage in the vicinity of 1.50 V. [Initial value]
00001	Set the low-voltage detection reset voltage in the vicinity of 1.55 V.
00010	Set the low-voltage detection reset voltage in the vicinity of 1.60 V.
00011	Set the low-voltage detection reset voltage in the vicinity of 1.65 V.
00100	Set the low-voltage detection reset voltage in the vicinity of 1.70 V.
00101	Set the low-voltage detection reset voltage in the vicinity of 1.75 V.
00110	Set the low-voltage detection reset voltage in the vicinity of 1.80 V.
00111	Set the low-voltage detection reset voltage in the vicinity of 1.85 V.
01000	Set the low-voltage detection reset voltage in the vicinity of 1.90 V.
01001	Set the low-voltage detection reset voltage in the vicinity of 1.95 V.
01010	Set the low-voltage detection reset voltage in the vicinity of 2.00 V.
01011	Set the low-voltage detection reset voltage in the vicinity of 2.05 V.
01100	Set the low-voltage detection reset voltage in the vicinity of 2.50 V.
01101	Set the low-voltage detection reset voltage in the vicinity of 2.60 V.
01110	Set the low-voltage detection reset voltage in the vicinity of 2.70 V.
01111	Set the low-voltage detection reset voltage in the vicinity of 2.80 V.
10000	Set the low-voltage detection reset voltage in the vicinity of 2.90 V.
10001	Set the low-voltage detection reset voltage in the vicinity of 3.00 V.
10010	Set the low-voltage detection reset voltage in the vicinity of 3.10 V.
10011	Set the low-voltage detection reset voltage in the vicinity of 3.20 V.
Others	Setting is prohibited.

- TYPE9 to TYPE12 products

Value	Description
00000	Set the low-voltage detection reset voltage in the vicinity of 2.45 V. [Initial value]
00001	Set the low-voltage detection reset voltage in the vicinity of 2.60 V.
00010	Set the low-voltage detection reset voltage in the vicinity of 2.70 V.
00011	Set the low-voltage detection reset voltage in the vicinity of 2.80 V.
00100	Set the low-voltage detection reset voltage in the vicinity of 3.00 V.
00101	Set the low-voltage detection reset voltage in the vicinity of 3.20 V.
00110	Set the low-voltage detection reset voltage in the vicinity of 3.60 V.
00111	Set the low-voltage detection reset voltage in the vicinity of 3.70 V.
01000	Set the low-voltage detection reset voltage in the vicinity of 4.00 V.
01001	Set the low-voltage detection reset voltage in the vicinity of 4.10 V.
01010	Set the low-voltage detection reset voltage in the vicinity of 4.20 V.
Others	Setting is prohibited.

[bit9:8] Reserved: Reserved bits

The read value is always "0".
These bits have no effect on the operation when written.

[bit7] LVDIE: Low-voltage detection interrupt enable bit

This bit is used to enable monitoring the power supply voltage of a low-voltage detection interrupt. When not enabling monitoring the power supply voltage, the Low-voltage Detection Interrupt Circuit is stopped.

Value	Description
0	Does not enable the generation of a low-voltage detection interrupt. [Initial value]
1	Enables the generation of a low-voltage detection interrupt.

[bit6:2] SVHI: Low-voltage detection interrupt voltage setting bits

These bits are used to specify the detection voltage of a low-voltage detection interrupt.

· TYPE6 and TYPE8 products

Value	Description
00100	Set the low-voltage detection interrupt voltage in the vicinity of 1.70 V. [Initial value]
00101	Set the low-voltage detection interrupt voltage in the vicinity of 1.75 V.
00110	Set the low-voltage detection interrupt voltage in the vicinity of 1.80 V.
00111	Set the low-voltage detection interrupt voltage in the vicinity of 1.85 V.
01000	Set the low-voltage detection interrupt voltage in the vicinity of 1.90 V.
01001	Set the low-voltage detection interrupt voltage in the vicinity of 1.95 V.
01010	Set the low-voltage detection interrupt voltage in the vicinity of 2.00 V.
01011	Set the low-voltage detection interrupt voltage in the vicinity of 2.05 V.
01100	Set the low-voltage detection interrupt voltage in the vicinity of 2.50 V.
01101	Set the low-voltage detection interrupt voltage in the vicinity of 2.60 V.
01110	Set the low-voltage detection interrupt voltage in the vicinity of 2.70 V.
01111	Set the low-voltage detection interrupt voltage in the vicinity of 2.80 V.
10000	Set the low-voltage detection interrupt voltage in the vicinity of 2.90 V.
10001	Set the low-voltage detection interrupt voltage in the vicinity of 3.00 V.
10010	Set the low-voltage detection interrupt voltage in the vicinity of 3.10 V.
10011	Set the low-voltage detection interrupt voltage in the vicinity of 3.20 V.
Others	Setting is prohibited.

· TYPE9 to TYPE12 products

Value	Description
00011	Set the low-voltage detection interrupt voltage in the vicinity of 2.80 V. [Initial value]
00100	Set the low-voltage detection interrupt voltage in the vicinity of 3.00 V.
00101	Set the low-voltage detection interrupt voltage in the vicinity of 3.20 V.
00110	Set the low-voltage detection interrupt voltage in the vicinity of 3.60 V.
00111	Set the low-voltage detection interrupt voltage in the vicinity of 3.70 V.
01000	Set the low-voltage detection interrupt voltage in the vicinity of 4.00 V.
01001	Set the low-voltage detection interrupt voltage in the vicinity of 4.10 V.
01010	Set the low-voltage detection interrupt voltage in the vicinity of 4.20 V.
Others	Setting is prohibited.

[bit1:0] Reserved: Reserved bits

The read value is always "0".

These bits have no effect on the operation when written.

<Notes>

- The low-voltage detection interrupt enable bit (LVDIE) must be enabled after "0" was written to the LVDCL bit of the Low-voltage Detection Interrupt Factor Clear Register (LVD_CLR) to clear the low-voltage detection interrupt factor bit (LVDIR).
- When the low-voltage detection interrupt enable bit (LVDIE) is not enabled, the Low-voltage Detection Circuit for detecting a low-voltage interrupt is stopped. Therefore, the low-voltage detection interrupt factor bit (LVDIR) is not set.
- The Low-voltage Detection Voltage Control Register (LVD_CTL) is write-protected in the initial state, which makes writing invalid unless write protection mode is released. To write the Low-voltage Detection Voltage Control Register (LVD_CTL), set 0x1ACCE553 to the Low-voltage Detection Voltage Protection Register (LVD_RLR) to release write protection mode.
- This register is initialized by power-on reset and low-voltage detection reset. It is not initialized by reset factor other than these resets.
- After the setting value of low-voltage detection reset voltage is changed, as the setting value is initialized by the low-voltage detection reset, the released voltage becomes the initial value. At that time, if the power supply voltage is higher than the released voltage, the reset is released. For the initial values of the detection voltage and the released voltage, see the data sheet of the product used.
- This register is not initialized by deep standby transition reset.
- In the case of disabling the CPU returning from a deep standby mode due to the low-voltage detection interrupt, set the WLVDE bit of the Deep Standby Return Enable Register (WIER) and the low-voltage detection interrupt enable bit (LVDIE) to 0, respectively.
- For the accuracy of detection / release voltage of the Low-voltage Detection Circuit, see Data Sheet of the product used.

5.2. Low-voltage Detection Interrupt Factor Register (LVD_STR)

The Low-voltage Detection Interrupt Factor Register (LVD_STR) holds a low-voltage detection interrupt factor.

bit	7	6	5	4	3	2	1	0
Field	LVDIR	Reserved						
Attribute	R	-						
Initial value	0	0000000						

[bit7] LVDIR: Low-voltage detection interrupt factor bit

Value	Description
0	A low-voltage detection interrupt request is not detected. [Initial value]
1	A low-voltage detection interrupt request has been detected.

[bit6:0] Reserved: Reserved bits

The read value is always "0".

These bits have no effect on the operation when written.

<Note>

This register is not initialized by deep standby transition reset.

5.3. Low-voltage Detection Interrupt Factor Clear Register (LVD_CLR)

The Low-voltage Detection Interrupt Factor Clear Register (LVD_CLR) clears a low-voltage detection interrupt factor.

bit	7	6	5	4	3	2	1	0
Field	LVDCL	Reserved						
Attribute	R/W	-						
Initial value	1	0000000						

[bit7] LVDCL: Low-voltage detection interrupt factor clear bit

Value	Description
0	Clears the low-voltage detection interrupt factor bit (LVDIR) of the Low-voltage Detection Interrupt Factor Register (LVD_STR) to "0".
1	Has no effect on the operation in write mode. [Initial value]

"1" is always set in read mode.

[bit6:0] Reserved: Reserved bits

The read value is always "0".

These bits have no effect on the operation when written.

<Note>

This register is not initialized by deep standby transition reset.

5.4. Low-voltage Detection Voltage Protection Register (LVD_RLR)

The Low-voltage Detection Voltage Protection Register (LVD_RLR) write-protects the Low-voltage Detection Voltage Control Register (LVD_CTL).

bit	31	30	29	28	27	26	25	24	23	22	21	20	19	18	17	16
Field	LVDLCK[31:16]															
Attribute	R/W															
Initial value	0x0000															

bit	15	14	13	12	11	10	9	8	7	6	5	4	3	2	1	0
Field	LVDLCK[15:0]															
Attribute	R/W															
Initial value	0x0001															

[bit31:0] LVDLCK[31:0]: Low-voltage Detection Voltage Control Register protection bits

- Setting 0x1ACCE553 enables writing the Low-voltage Detection Voltage Control Register (LVD_CTL) (releases write protection mode).
- Setting a value other than 0x1ACCE553 disables writing the Low-voltage Detection Voltage Control Register (LVD_CTL) (enables write protection mode).
- When the Low-voltage Detection Voltage Control Register (LVD_CTL) is not set in write protection mode, 0x00000000 is read.
- When the Low-voltage Detection Voltage Control Register (LVD_CTL) is set in write protection mode, 0x00000001 is read.

<Notes>

- The Low-voltage Detection Voltage Control Register (LVD_CTL) is write-protected in the initial state. To write the LVD_CTL Register, set 0x1ACCE553 to the Low-voltage Detection Voltage Protection Register (LVD_RLR) to release write protection mode.
- To enable write protection mode of the LVD_CTL register, set a value other than 0x1ACCE553 to the LVD_RLR register.
- Once write protection mode is released for the LVD_CTL Register, it remains released until a value other than 0x1ACCE553 is written to the LVD_RLR Register.
- This register is not initialized by deep standby transition reset.

5.5. Low-voltage Detection Circuit Status Register (LVD_STR2)

The Low-voltage Detection Circuit Status Register (LVD_STR2) checks the operation status of a low-voltage detection interrupt.

bit	7	6	5	4	3	2	1	0
Field	LVDIRDY	LVDRRDY	Reserved					
Attribute	R	R	-					
Initial value	0	1	000000					

[bit7] LVDIRDY: Low-voltage detection interrupt status flag

Value	Description
0	Stabilization wait state or monitoring stop state [Initial value]
1	Monitoring state

This bit has no effect on the operation in write mode.

[bit6] LVDRRDY: Low-voltage detection reset status flag

Value	Description
0	Stabilization wait state or monitoring stop state
1	Monitoring state [Initial value]

This bit has no effect on the operation in write mode.

[bit5:0] Reserved: Reserved bits

The read value is always "0".

These bits have no effect on the operation when written.

<Note>

This register is not initialized by deep standby transition reset.

6. Usage Precautions

This section explains the precautions for using Low-voltage Detection Circuit.

- Low-voltage detection interrupt factor bit at STOP mode transition

  Even if the power supply voltage is not greater than the detection voltage after clearing the Low-voltage Detection Interrupt factor bit (LVD_STRLVDIR), the interrupt factor will not be enabled again unless the power supply voltage becomes greater than the released voltage once.
  But, the voltage comparison is executed by the Low-voltage Detection Circuit without fail when the transition to the STOP mode is executed while the power supply voltage is not greater than the detection voltage after clearing LVDIR. So, the Low-voltage detection interrupt factor is set again by the transition to STOP mode and the process could go to the interrupt routine.

  For example, in case of the transition to STOP mode in the interrupt routine of the Low-voltage detection, after clearing the interrupt factor and finishing the interrupt routine, the interrupt factor bit is set soon again and the interrupt routine might be repeated.

  To prevent the occurrence of repeated interrupts when the voltage is not greater than the detection voltage after the detection of the low-voltage interrupt, disable the Low-voltage detection interrupt enable bit (LVDIE) and get out of the routine.

- Setup of Detection Voltage of Low-voltage Detection Reset

When the Low-voltage detection reset is generated after setting the detection voltage of Low-voltage detection reset voltage, the detection voltage setting value is initialized. When the power supply voltage is higher than the initial setup value as in the case where the power supply voltage lowers slowly, the reset is released. But, as the program is returned to the beginning by the reset, set the detection voltage again. As the power supply voltage is already lower than the detection voltage, the Low-voltage detection reset is set again.

That is to say, the loop of the detection voltage change, reset, initialization (returned to the beginning), the detection voltage change, and reset could be repeated according to the power supply voltage change and program description.

The following measures can be taken to prevent the loop of the Low-voltage detection reset when the power supply voltage is not greater than the detection voltage:

- For the setting value of the Low-voltage detection reset, only the initial value is used.
- Set the Low-voltage detection interrupt before the Low-voltage detection reset. Confirm whether an interrupt flag is set at the beginning of the program and change the setting value of the Low-voltage reset detection voltage, if required.

CHAPTER 6: Low Power Consumption Mode

This chapter explains the functions and operations of low power consumption mode.

1. Overview of Low Power Consumption Mode
2. Configuration of CPU Operation Modes
3. Operations of Standby Modes
4. Standby Mode Setting Procedure Examples
5. Description of Deep Standby Mode Operation
6. Deep Standby Mode Setting Procedure Examples
7. Deep Standby Return Factor Determination Procedure
8. List of Low Power Consumption Mode Registers
9. Usage Precautions

1. Overview of Low Power Consumption Mode

To reduce the power consumption, the system provides low power consumption mode, which enables the use of the standby mode of SLEEP, TIMER, RTC and STOP modes and the deep standby mode of deep standby RTC and deep standby STOP modes.

■ Overview of CPU operation modes

CPU operation modes are classified into the following types.

● Run modes

- High speed CR run mode
- Main run mode
- PLL run mode
- Low speed CR run mode
- Sub run mode

● Standby modes

- Sleep modes
  - High speed CR sleep mode
  - Main sleep mode
  - PLL sleep mode
  - Low speed CR sleep mode
  - Sub sleep mode
- Timer modes
  - High speed CR timer mode
  - Main timer mode
  - PLL timer mode
  - Low speed CR timer mode
  - Sub timer mode
- RTC mode
- STOP mode

● Deep Standby modes

- Deep Standby RTC mode
- Deep Standby STOP mode

■ Table of low power consumption modes equipped in each TYPE

Table 1-1 Table of Low Power Consumption Mode

		TYPE0 to TYPE2, TYPE4	TYPE3, TYPE7	TYPE5, TYPE6, TYPE8, TYPE9 TYPE12	TYPE10, TYPE11
Standby modes	SLEEP modes	○	○	○	○
	TIMER mode	○	○	○	○
	RTC mode	-	○	○	○
	STOP mode	○	○	○	○
Deep standby modes	Deep standby RTC mode	-	○	○	-
	Deep standby RTC mode (On-chip SRAM retention)	-	-	○	-
	Deep standby STOP mode	-	○	○	-
	Deep standby STOP mode (On-chip SRAM retention)	-	-	○	-

Table 1-2 Table of Low Power Consumption Registers

	TYPE0 to TYPE5	TYPE6, TYPE8 to TYPE12	TYPE7
Sub oscillation circuit voltage control register (REG_CTL)	-	○	-
Sub clock control register (RCK_CTL)	-	○	○

■ Overview of RUN mode

RUN mode is defined with a clock selected as a master clock. The base clocks, which are obtained by dividing the master clock frequency, are supplied to CPU clock, AHB bus clock, and APB bus clock to run the CPU, buses, and most peripherals.

The source clock frequency can be changed dynamically. When not using the main clock or sub clock, the oscillator of main clock or sub clock can be stopped.

RUN mode is divided into the following modes depending on the clock selected as a master clock.

● High speed CR run mode

In this mode, the high speed CR clock is used as a master clock. The status of main PLL clock or main clock or sub clock varies depending on the setting of the PLLE or MOSCE or SOSCE bit. The low speed CR oscillator is always set to the active state. It changes to this mode after a reset has been released.

● Main run mode

In this mode, the main clock is used as a master clock. The status of the main PLL clock or sub clock varies depending on the setting of the PLLE or SOSCE bit. The high and low speed CR oscillators are always set to the active state.

● PLL run mode

In this mode, the main PLL clock obtained by multiplying the main clock or high speed CR clock is used as a master clock. The status of the main clock or sub clock varies depending on the setting of the MOSCE or SOSCE bit. The high and low speed CR oscillators are always set to the active state.

● Low speed CR run mode

In this mode, the low speed CR clock is used as a master clock. The status of the sub clock varies depending on the setting of the SOSCE bit. The high speed CR oscillator is stopped. The high speed CR clock and main clock, and main PLL clock are not available in this mode.

● Sub run mode

In this mode, the sub clock is used as a master clock. The low speed CR oscillator is always set to the active state. The high speed CR oscillator is stopped. The high speed CR clock and main clock, and main PLL clock are not available in this mode.

■ Overview of SLEEP mode

SLEEP mode is classified as one of standby modes. SLEEP mode is used to stop CPU clocks. This causes the CPU to be stopped, reducing the power consumption. The resources connected to the AHB and APB bus clocks continue operations.

SLEEP mode is divided into the following modes depending on a master clock at the transition to SLEEP mode.

● High speed CR sleep mode

When the high speed CR clock is selected as a master clock, the system changes to high speed CR sleep mode if the transition to SLEEP mode is requested. The status of the main PLL clock, main clock or sub clock varies depending on the setting of the PLLE, MOSCE or SOSCE bit. The low speed CR oscillator is always set to the active state.

● Main sleep mode

When the main clock is selected as a master clock, the system changes to main sleep mode if the transition to SLEEP mode is requested. The status of the main PLL clock or sub clock varies depending on the setting of the PLLE or SOSCE bit. The high speed CR oscillator and low speed CR oscillator are always set to the active state.

● PLL sleep mode

When the main PLL clock is selected as a master clock, the system changes to PLL sleep mode if the transition to SLEEP mode is requested. The status of the main clock or sub clock varies depending on the setting of the MOSCE or SOSCE bit. The high speed CR oscillator and low speed CR oscillator are always set to the active state.

● Low speed CR sleep mode

When the low speed CR clock is selected as a master clock, the system changes to low speed CR sleep mode if the transition to SLEEP mode is requested. The status of the sub clock varies depending on the setting of the SOSCE bit. The high speed CR oscillator is stopped. The high speed CR clock and main clock, and main PLL clock are not available in this mode.

● Sub sleep mode

When the sub clock is selected as a master clock, the system changes to sub sleep mode if the transition to SLEEP mode is requested. In this mode, the low speed CR oscillator is always set to the active state. The high speed CR oscillator is stopped. The high speed CR oscillator and main clock, and main PLL clock are not available in this mode.

■ Overview of TIMER mode

TIMER mode is classified as one of standby modes. TIMER mode is used to stop supplying a base clock. This causes the CPU clock, AHB bus clock, and all APB bus clocks to be stopped, reducing the power consumption. In this case, all functions are stopped, excluding the oscillators, PLL, hardware watchdog timer, watch counter, RTC, clock failure detector, and Low Voltage Detection Circuit.

TIMER mode is divided into the following modes depending on a master clock at the transition to TIMER mode.

● High speed CR timer mode

When the high speed CR clock is selected as a master clock, the system changes to high speed CR timer mode if the transition to TIMER mode is requested. The status of the main PLL clock, main clock or sub clock varies depending on the setting of the PLLE, MOSCE or SOSCE bit. The low speed CR oscillator is always set to the active state.

● Main timer mode

When the main clock is selected as a master clock, the system changes to main timer mode if the transition to TIMER mode is requested. The statuses of the main PLL clock and sub clock varies depending on the setting of the PLLE and SOSCE bit respectively. The high speed CR oscillator and low speed CR oscillator are always set to the active state.

● PLL timer mode

When the main PLL clock is selected as a master clock, the system changes to PLL timer mode if the transition to TIMER mode is requested. The status of the main clock or sub clock varies depending on the setting of the MOSCE or SOSCE bit. The high speed CR oscillator and low speed CR oscillator are always set to the active state.

● Low speed CR timer mode

When the low speed CR clock is selected as a master clock, the system changes to low speed CR timer mode if the transition to TIMER mode is requested. The status of the sub clock varies depending on the setting of the SOSCE bit. The high speed CR oscillator is stopped. The high speed CR clock and main clock, and main PLL clock are not available in this mode.

● Sub timer mode

When the sub clock is selected as a master clock, the system changes to sub timer mode if the transition to TIMER mode is requested. The sub clock and low speed CR clock are always set to the active state. The high speed CR oscillator is stopped. The high speed CR oscillator and main clock, and main PLL clock are not available in this mode.

■ Overview of RTC mode

RTC mode is classified as one of the standby modes. RTC mode stops oscillation other than that of the sub clock. All the functions except for watch counter, RTC, and low voltage detection circuit will be stopped.

■ Overview of STOP mode

STOP mode is classified as one of standby modes. STOP mode is used to stop all oscillating operations. Enabling this mode stops all functions, excluding the Low Voltage Detection Circuit.

■ Overview of deep standby RTC mode

Deep standby RTC mode is classified as one of the deep standby modes. Deep standby RTC mode stops oscillation other than that of the sub clock. All the functions except for the RTC and low voltage detection circuit will be stopped. It turns off CPUs, on-chip Flash memory, on-chip SRAM*, and peripheral functions inside the chip other than GPIO, RTC, low voltage detection circuit.

■ Overview of deep standby stop mode

Deep standby stop mode is classified as one of the deep standby modes. Deep standby stop mode stops all oscillations. All the functions except for the low voltage detection circuit will be stopped. It turns off CPUs, on-chip Flash memory, on-chip SRAM*, and peripheral functions inside the chip other than GPIO, RTC, low voltage detection circuit.

*: Some product TYPE can retain the data in on-chip SRAM even in the deep standby modes.
In the setting to retain on-chip SRAM data, the power of on-chip SRAM is ON.
For the corresponding product TYPE, see Table 1-1.

■ Relationships between CPU operation modes and consumption current values

Figure 1-1 shows the relationships between CPU operation modes and consumption current values.

Figure 1-1 Relationships between CPU operation modes and consumption current values

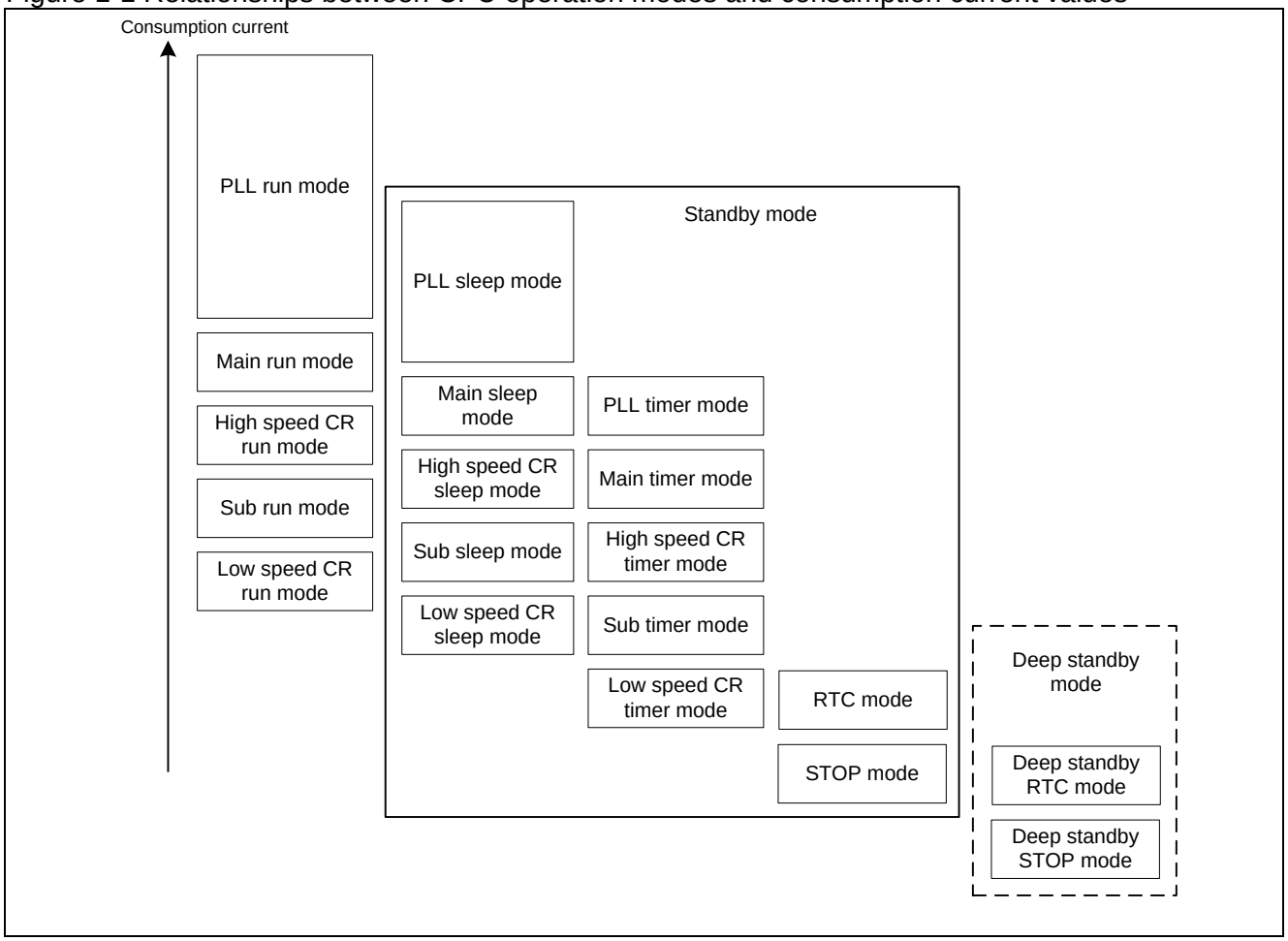

<Note>

Figure 1-1 shows only an overview of the magnitude relationship among consumption currents of each mode. The actual consumption current values vary depending on the oscillator and PLL starting conditions in each mode or the clock configuration of the selected frequency and other elements.

2. Configuration of CPU Operation Modes

This section explains the configuration of CPU operation modes.

■ CPU operation mode transition diagram

Figure 2-1 shows the CPU operation mode transition diagram.

Figure 2-1 CPU operation mode transition diagram

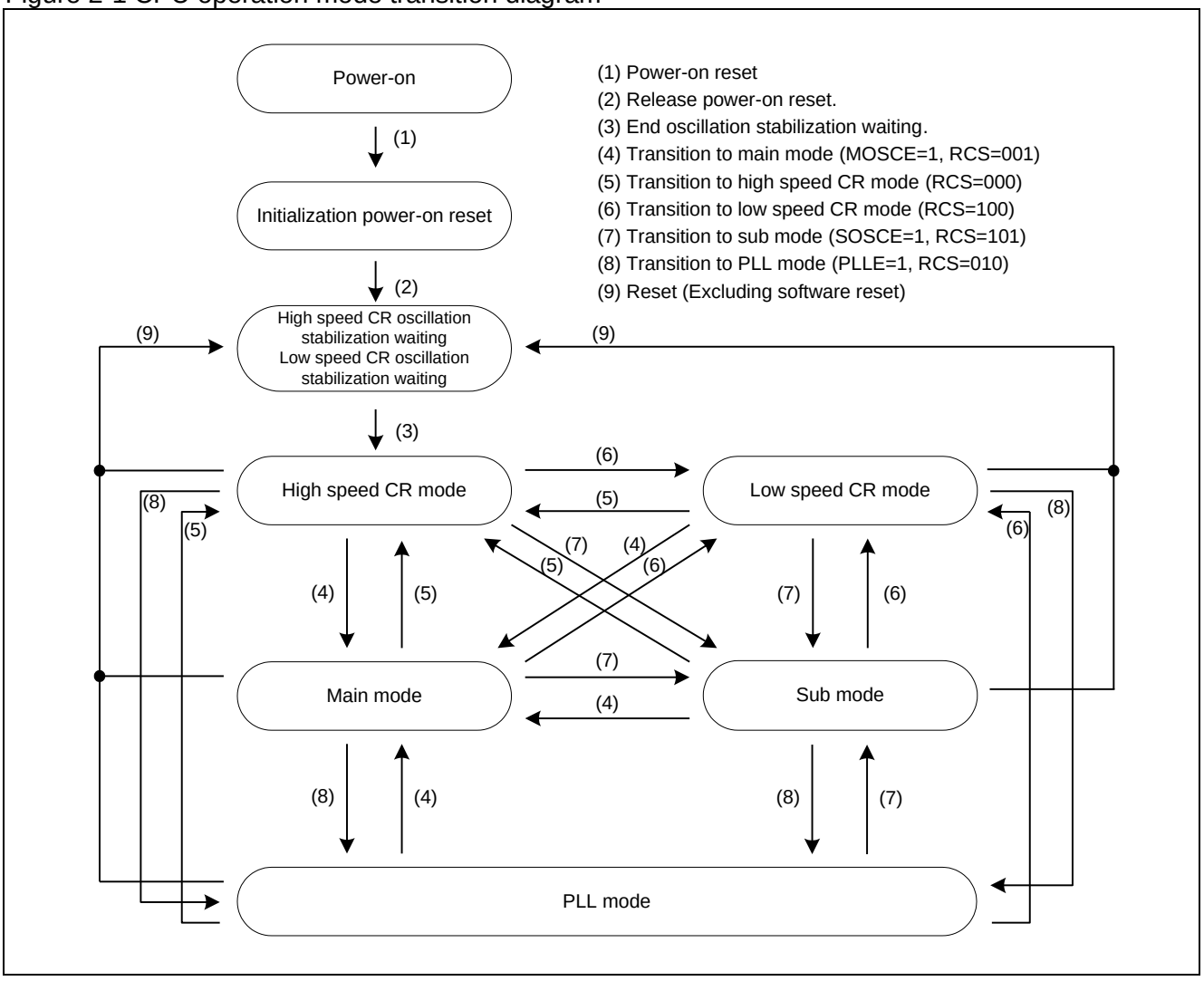

- **High speed CR mode**
  In this mode, the high speed CR clock is used as a master clock.
- **Main mode**
  In this mode, the main clock is used as a master clock.
- **Low speed CR mode**
  In this mode, the low speed CR clock is used as a master clock.
- **Sub mode**
  In this mode, the sub clock is used as a master clock.

- **PLL mode**

  In this mode, the main PLL clock is used as a master clock.

■ High speed CR mode transition diagram

In high speed CR mode, the high speed CR clock is used as a master clock.

Figure 2-2 High speed CR mode transition diagram

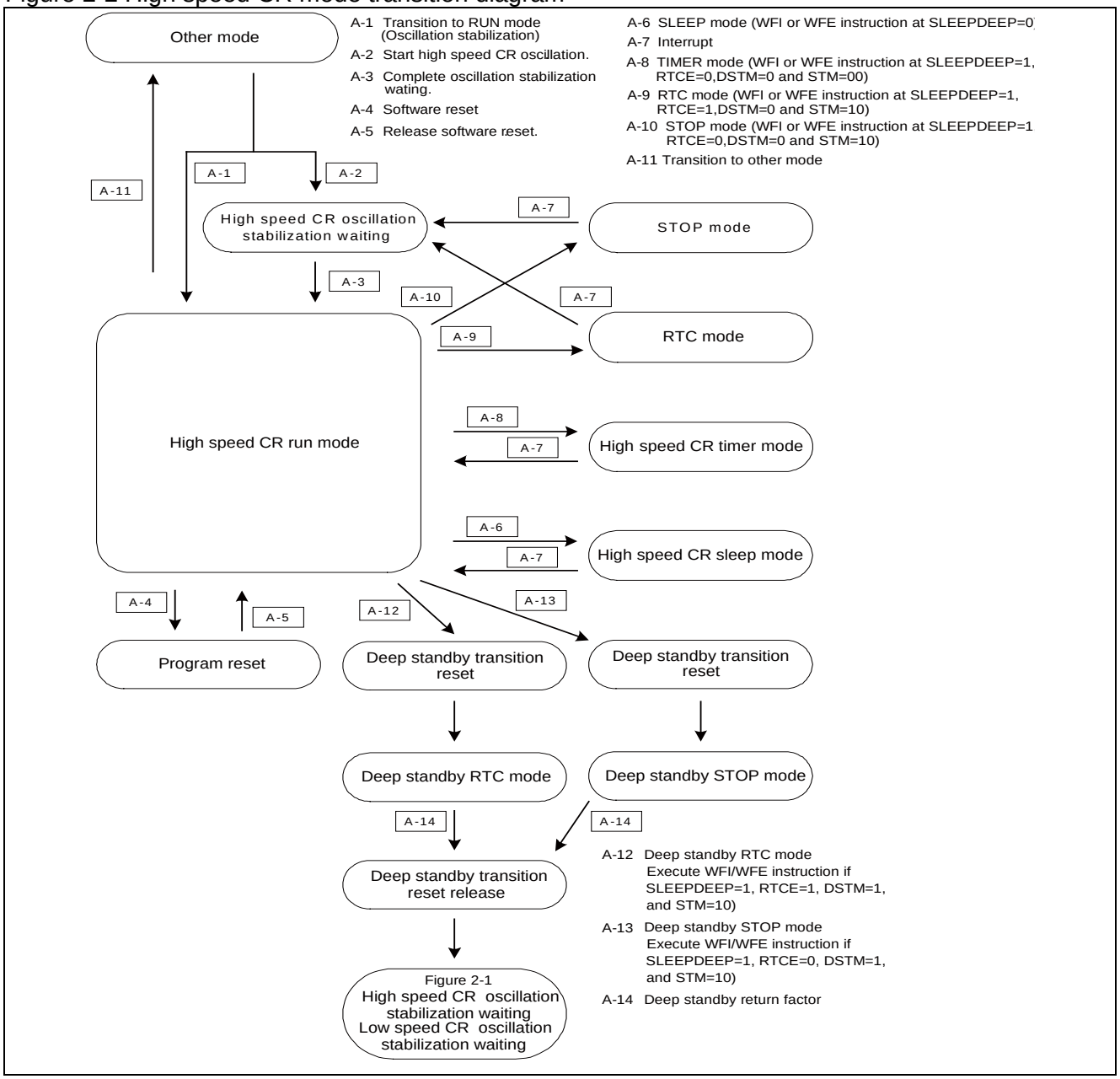

<Note>

There are products that do not equip RTC mode, deep standby RTC mode, and deep standby STOP mode. See Table 1-1 (table of low power consumption modes).

■ Main mode transition diagram

In main mode, the main clock is used as a master clock.

Figure 2-3 Main mode transition diagram

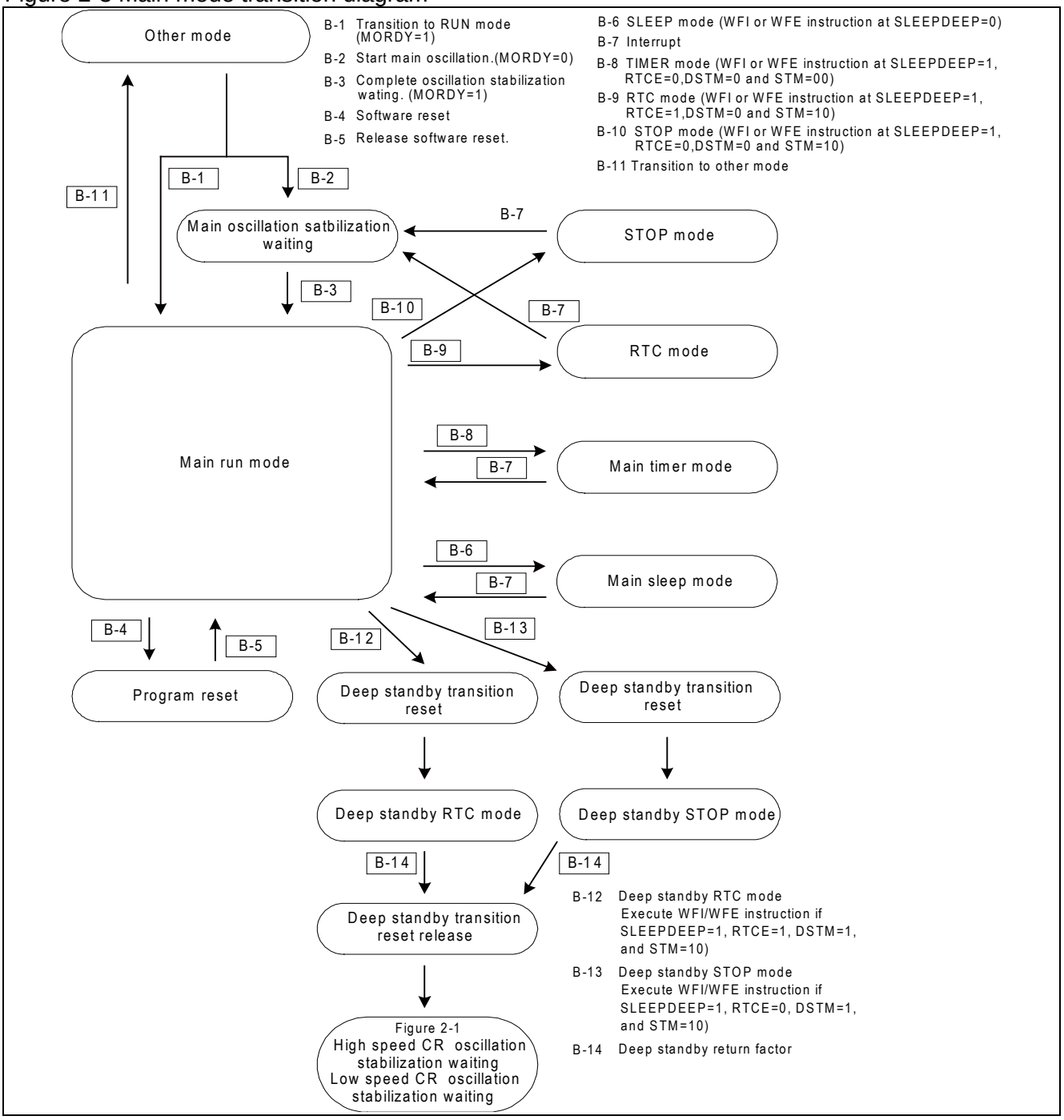

<Note>

There are products that do not equip RTC mode, deep standby RTC mode, and deep standby STOP mode. See Table 1-1 (table of low power consumption modes).

■ Low speed CR mode transition diagram

In low speed CR mode, the low speed CR clock is used as a master clock.

Figure 2-4 Low speed CR mode transition diagram

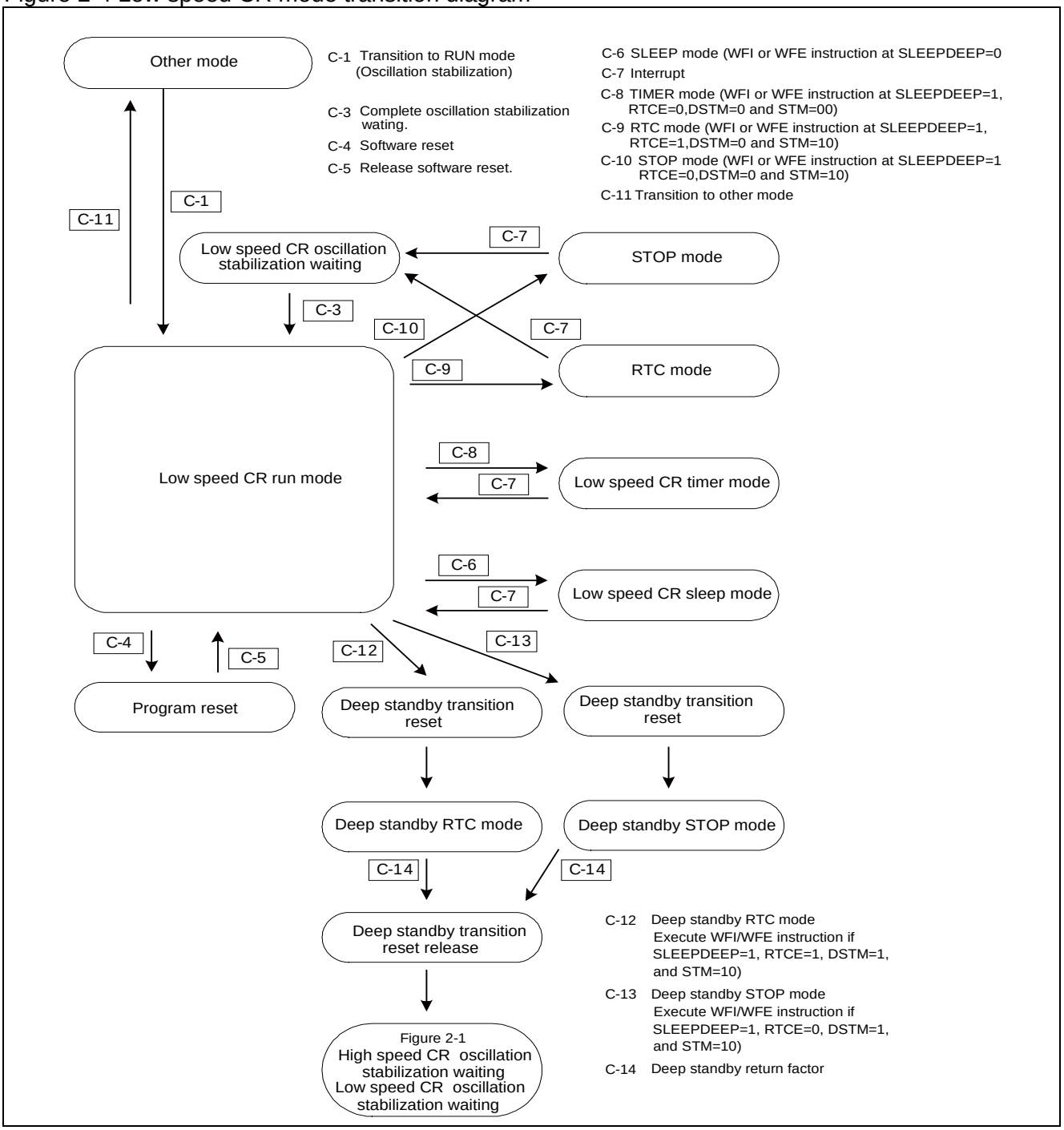

<Note>

There are products that do not equip RTC mode, deep standby RTC mode, and deep standby STOP mode. See Table 1-1 (table of low power consumption modes).

■ Sub mode transition diagram

In sub mode, the sub clock is used as a master clock.

Figure 2-5 Sub mode transition diagram

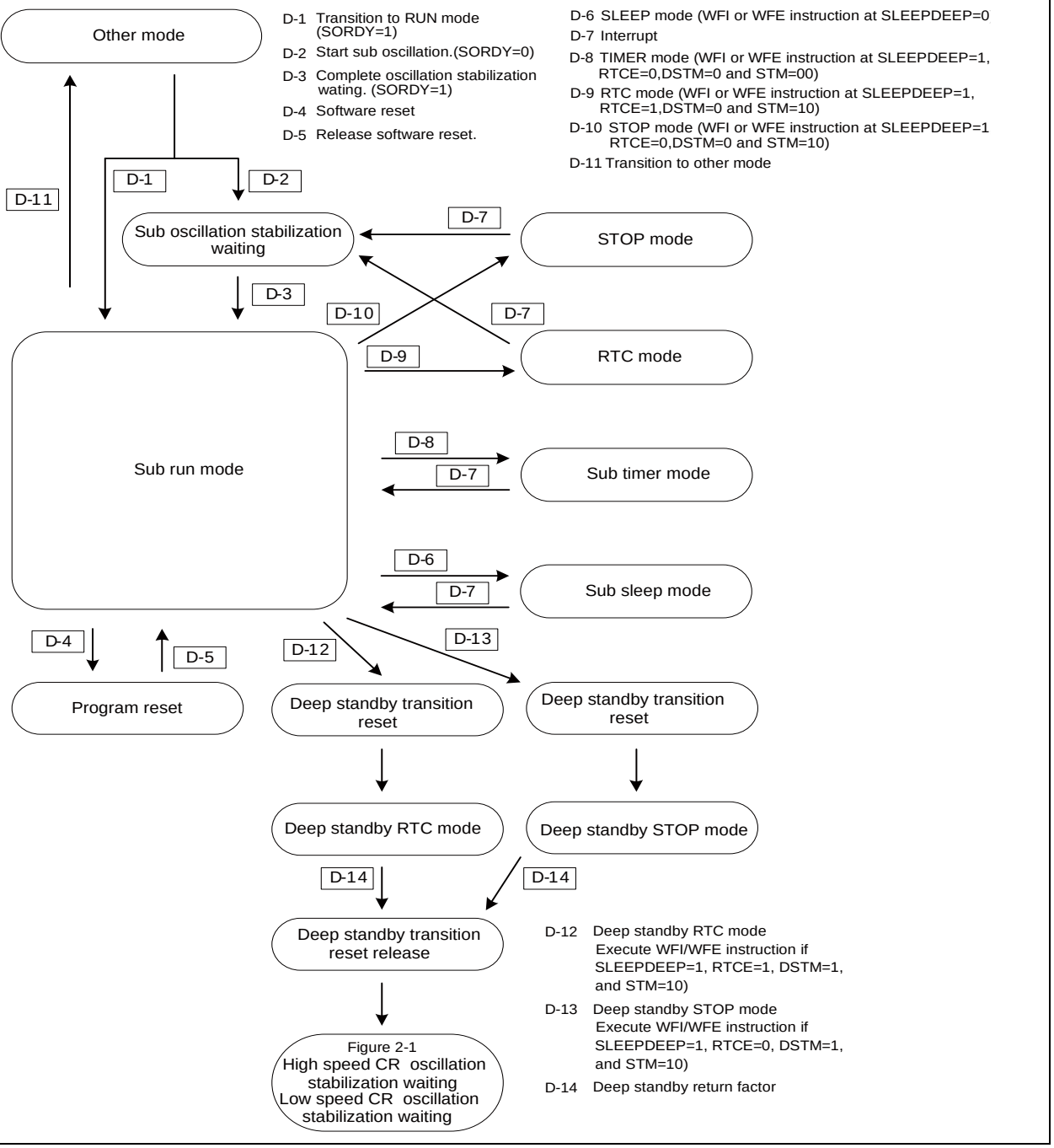

<Note>

There are products that do not equip RTC mode, deep standby RTC mode, and deep standby STOP mode. See Table 1-1 (table of low power consumption modes).

■ PLL mode transition diagram

In PLL mode, the main PLL clock is used as a master clock.

Figure 2-6 PLL mode transition diagram

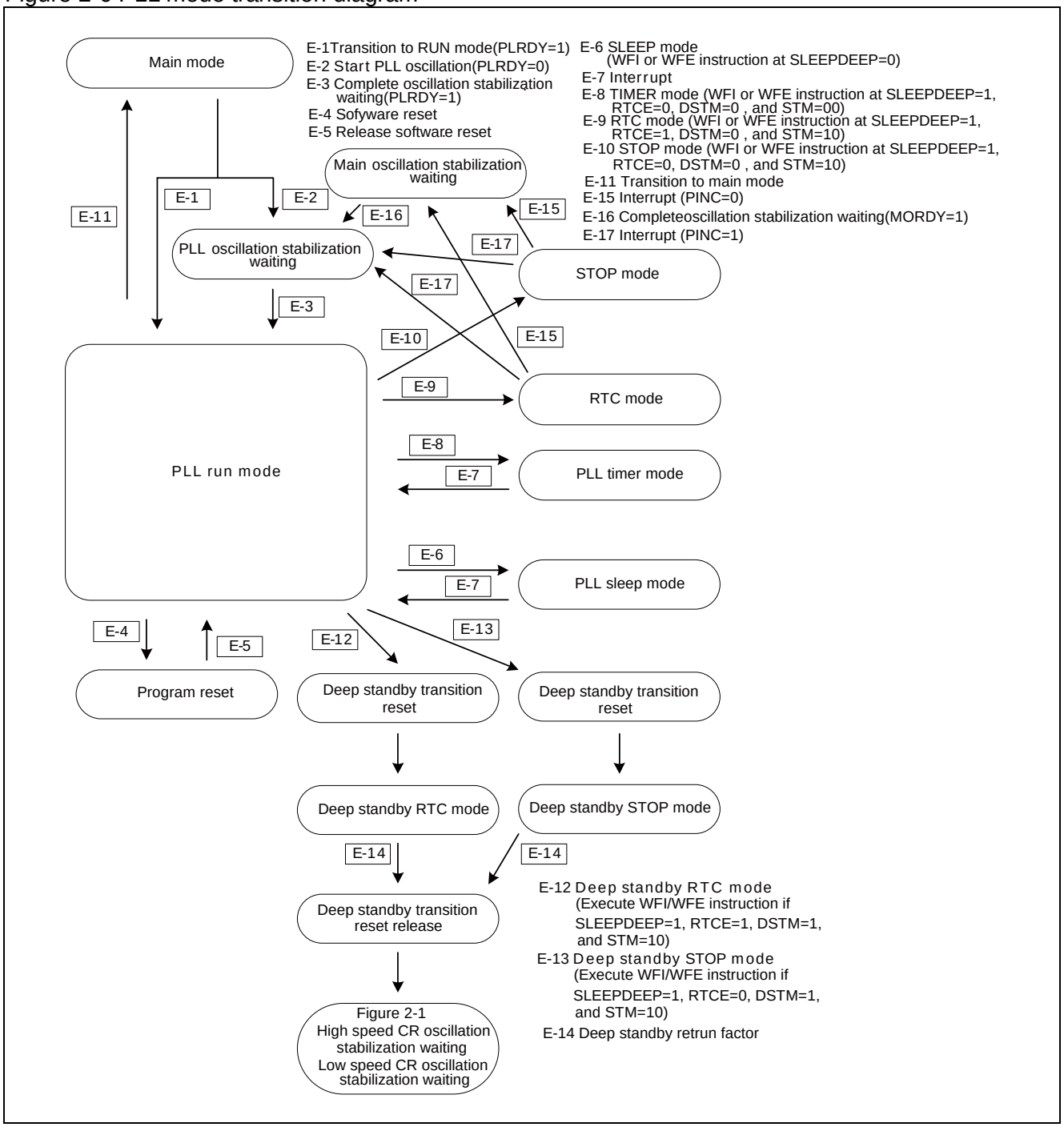

<Note>

There are products that do not equip RTC mode, deep standby RTC mode, and deep standby STOP mode. See Table 1-1 (table of low power consumption modes).

MOSCE:	MOSCE bit of System Clock Mode Control Register (SCM_CTL)
SOSCE:	SOSCE bit of System Clock Mode Control Register (SCM_CTL)
PLLE:	PLLE bit of System Clock Mode Control Register (SCM_CTL)
RCS:	RCS bit of System Clock Mode Control Register (SCM_CTL)
MORDY:	MORDY bit of System Clock Mode Status Register (SCM_STR)
SORDY:	SORDY bit of System Clock Mode Status Register (SCM_STR)
PLRDY:	PLRDY bit of System Clock Mode Status Register (SCM_STR)
PINC:	PINC bit of PLL Clock Stabilization Wait Time Setup Register (PSW_TMR)

* For the SCM_CTL, SCM_STR and PSW_TMR Registers, refer to Chapter "Clock".

<Note>

To return from low speed CR timer mode, sub timer mode, RTC mode, STOP mode, Deep standby RTC mode, or Deep standby STOP mode, the voltage stabilization wait time (a few hundred μs) for the operation mode transition of the built-in regulator is ensured. After the wait time has lapsed, the system performs operations to return to each RUN mode.

3. Operations of Standby Modes

This section explains operations of standby modes.
Standby modes are classified into four types: SLEEP modes (high speed CR sleep, main sleep, PLL sleep, low speed CR sleep, and sub sleep), TIMER modes (high speed CR timer, main timer, PLL timer, low speed CR timer, and sub timer), RTC mode and STOP mode.

■ Clock operation states in standby modes

The table below shows the states of the oscillator clock, CPU clock, AHB bus clock, and APB bus clock in SLEEP, TIMER, RTC and STOP modes.

Table 3-1 Clock operation states in SLEEP modes

	SLEEP modes				
	High speed CR sleep mode	Main sleep mode	PLL sleep mode	Low speed CR sleep mode	Sub sleep mode
High speed CR clock	Operating	Operating	Operating	Stopped	Stopped
Main clock	Varies depending on the setting of the MOSCE bit.	Operating	Varies depending on the setting of the MOSCE bit and the PINC bit.	Stopped	Stopped
Main PLL clock	Varies depending on the setting of the MOSCE bit and the PLLE bit.	Varies depending on the setting of the PLLE bit.	Operating	Stopped	Stopped
Low speed CR clock	Operating	Operating	Operating	Operating	Operating
Sub clock	Varies depending on the setting of the SOSCE bit.	Varies depending on the setting of the SOSCE bit.	Varies depending on the setting of the SOSCE bit.	Varies depending on the setting of the SOSCE bit.	Operating
USB PLL clock	Varies depending on the setting of the MOSCE bit and the UPLLEN bit.	Varies depending on the setting of the UPLLEN bit.	Varies depending on the setting of the UPLLEN bit.	Stopped	Stopped
CPU clock	Stopped				
AHB bus clock	High speed CR clock	Main clock	PLL clock	Low speed CR clock	Sub clock
APB0 bus clock	High speed CR clock	Main clock	PLL clock	Low speed CR clock	Sub clock
APB1 bus clock	High speed CR clock	Main clock	PLL clock	Low speed CR clock	Sub clock
	* Whether or not operation is enabled is determined depending on the setting of the APBC1EN bit.				
APB2 bus clock	High speed CR clock	Main clock	PLL clock	Low speed CR clock	Sub clock
	* Whether or not operation is enabled is determined depending on the setting of the APBC2EN bit.				

Table 3-2 Clock operation states in TIMER modes

	TIMER modes				
	High speed CR timer mode	Main timer mode	PLL timer mode	Low speed CR timer mode	Sub timer mode
High speed CR clock	Operating	Operating	Operating	Stopped	Stopped
Main clock	Varies depending on the setting of the MOSCE bit.	Operating	Varies depending on the setting of the MOSCE bit and the PINC bit.	Stopped	Stopped
Main PLL clock	Varies depending on the setting of the MOSCE bit and the PLLE bit.	Varies depending on the setting of the PLLE bit.	Operating	Stopped	Stopped
Low speed CR clock	Operating	Operating	Operating	Operating	Operating
Sub clock	Varies depending on the setting of the SOSCE bit.	Varies depending on the setting of the SOSCE bit.	Varies depending on the setting of the SOSCE bit.	Varies depending on the setting of the SOSCE bit.	Operating
USB PLL clock	Stopped	Stopped	Stopped	Stopped	Stopped
CPU clock	Stopped				
AHB bus clock	Stopped				
APB0 bus clock	Stopped				
APB1 bus clock	Stopped				
APB2 bus clock	Stopped				

Table 3-3 Clock operation state in RTC mode and STOP mode

	RTC mode	STOP mode
High speed CR clock	Stopped	Stopped
Main clock		
Main PLL clock		
Low speed CR clock		
Sub clock	Operating	
USB PLL clock	Stopped	
CPU clock		
AHB bus clock		
APB0 bus clock		
APB1 bus clock		
APB2 bus clock		

MOSCE: MOSCE bit of System Clock Mode Control Register (SCM_CTL)
SOSCE: SOSCE bit of System Clock Mode Control Register (SCM_CTL)
PLLE: PLLE bit of System Clock Mode Control Register (SCM_CTL)
UPLLEN: UPLLEN bit of USB-PLL Control Register1 (UPCR1)
APBC1EN: APBC1EN bit of Peripheral Bus Clock Frequency Division Register (APBC1_PSR)
APBC2EN: APBC2EN bit of Peripheral Bus Clock Frequency Division Register (APBC2_PSR)

*: For the SCM_CTL, APBC1_PSR, and APBC2_PSR Registers, refer to Chapter "Clock".
For the UPCR1 Registers, refer to Chapter "USB Clock Generation" in "Communication Macro Part".

■ Return factors from standby modes

The table below shows the factors by which the system returns from the SLEEP, TIMER, RTC and STOP modes.

Table 3-4 Return factors from standby modes

	SLEEP mode	TIMER mode	RTC mode	STOP mode
Return factors by reset	・ INITX pin input reset ・ Low-voltage detection reset ・ Software watchdog reset ・ Hardware watchdog reset ・ Clock failure detection reset ・ Anomalous frequency detection reset	・ INITX pin input reset ・ Low-voltage detection reset ・ Hardware watchdog reset ・ Clock failure detection reset ・ Anomalous frequency detection reset(Main Timer Mode, PLL Timer Mode)	・ INITX pin input reset ・ Low-voltage detection reset	・ INITX pin input reset ・ Low-voltage detection reset
Return factors by interrupt	・ Effective interrupt from each peripheral	・ NMI interrupt ・ External interrupt ・ Hardware watchdog timer interrupt ・ USB wake up interrupt ・ Watch counter interrupt ・ RTC interrupt ・ HDMI-CEC Reception*/ Remote Control Reception interrupt ・ Low voltage detection interrupt	・ NMI interrupt ・ External interrupt ・ USB wake up interrupt ・ RTC interrupt ・ HDMI-CEC Reception*/ Remote Control Reception interrupt ・ Low voltage detection interrupt	・ NMI interrupt ・ External interrupt ・ USB wake up interrupt ・ Low voltage detection interrupt

*: HDMI-CEC transmission interrupt is not a return factor.

3.1. Operations of SLEEP Mode

SLEEP mode is classified as one of standby modes. Enabling SLEEP mode stops CPU clocks, reducing the power consumption.

■ Functions of SLEEP mode

● CPU and on-chip memory

In SLEEP mode, the clock supplied to the CPU is stopped. AHB bus clock continues to operate. On-chip memory keeps operating and retains the data.

● Peripherals

The APB0 bus clock is still active in SLEEP mode. The states of the APB1 and APB2 bus clocks vary depending on the APBC1EN bit and APBC2EN bit settings. Peripherals are operated in the state that is set at transition.

● Watch counter and RTC

Watch counter and RTC remain unaffected by SLEEP mode. They continue to operate according to the setting before transiting to SLEEP mode.

● Oscillator clocks

Table 3-1 shows the status of each oscillator clock.

● Reset and interrupt

Reset and interrupt are available to return from SLEEP mode.

● External bus

The external bus is still active in SLEEP mode.

● Status of pin

All pin settings are held in SLEEP mode.

■ SLEEP mode setting procedure

Execute the following steps to transit to SLEEP mode.

1. Set "0" to the SLEEPDEEP bit of the Cortex-M3 System Control Register.
2. Execute the WFI or WFE instruction.
   The system transits to the appropriate SLEEP mode according to the current clock mode indicated in the RCM[2:0] bits of the System Clock Mode Status Register (SCM_STR).

For the System Clock Mode Status Register (SCM_STR), refer to Chapter "Clock".

■ Return from SLEEP mode

The CPU returns from SLEEP mode in one of the following cases.

● Return by reset

If a reset (INITX pin input reset, low-voltage detection reset, software watchdog reset, hardware watchdog reset, clock supervisor reset, or anomalous frequency detection reset) occurs, the CPU changes to high speed CR run mode regardless of clock mode.

● Return by interrupt

If an effective interrupt is received from a peripheral in SLEEP mode, the CPU returns from SLEEP mode and changes to RUN mode to fit clock mode indicated in the RCM[2:0] bits of the System Clock Mode Status Register (SCM_STR).

Table 3-5 Operation modes after the CPU returned from SLEEP mode by interrupt

	Status of master clock before transition to SLEEP mode				
	RCM=000 (High speed CR oscillator)	RCM=001 (Main oscillator)	RCM=010 (PLL oscillator)	RCM=100 (Low speed CR oscillator)	RCM=101 (Sub oscillator)
Operation modes after return by interrupt	High speed CR run mode	Main run mode	PLL run mode	Low speed CR run mode	Sub run mode

RCM: RCM[2:0] bits of System Clock Mode Status Register (SCM_STR)

* For the SCM_CTL and SCM_STR Registers, refer to Chapter "Clock".

● Waiting for oscillation stabilization at return

When the CPU returns by reset, it waits for the stabilization of high and low speed CR clock oscillations. If the CPU returns by interrupt, it does not need to wait for oscillation to stabilize.

3.2. Operations of TIMER Mode

TIMER mode is used to stop supplying a base clock. This causes the CPU clock, AHB bus clock, and all APB bus clocks to be stopped, leading to the further reduction of power consumption. In this case, all functions are stopped, excluding the oscillators, PLL, hardware watchdog timer, watch counter, RTC clock failure detector, and Low Voltage Detection Circuit.

■ Functions of TIMER mode

● CPU and on-chip memory

In TIMER mode, the CPU clock supplied to the CPU and AHB bus clock supplied to the on-chip memory and DMA controller are stopped. However, the contents of on-chip memory are retained. Also, the debug function is stopped.

● Peripherals

In TIMER mode, all APB clocks are stopped, and all resources, excluding the hardware watchdog timer, watch counter, RTC, clock supervisor, and Low Voltage Detection Circuit, are stopped in the last state.

● Watch counter and RTC

Watch counter and RTC remain unaffected by TIMER mode. They continue to operate according to the setting before transiting to TIMER mode.

● Oscillator clocks

Table 3-2 shows the status of each oscillator clock.

● Reset and interrupt

Reset and interrupt are available to return from TIMER mode.

● External bus

The external bus is stopped in TIMER mode.

● Status of pin

The system can control whether to retain the state just before the external pin changes to TIMER mode or change to high impedance status depending on the setting of the SPL bit in the Standby Mode Control Register (STB_CTL).

■ TIMER mode setting procedure

Execute the following steps to transit to TIMER mode.

1. Set "0" in RTCE bit of RTC Mode Control Register (PMD_CTL).
2. Write "0x1ACC" to the KEY bit and "0" to DSTM bit and "0b00" to the STM bit of the Standby Mode Control Register (STB_CTL). Use the SPL bit to set the status of each pin in TIMER mode.
3. Set "1" to the SLEEPDEEP bit of the Cortex-M3 System Control Register.
4. Execute the WFI or WFE instruction.
   The system transits to the appropriate TIMER mode according to the current clock mode indicated in the RCM[2:0] bits of the System Clock Mode Status Register (SCM_STR).

<Note>

RTCE bit and DSTM bit are not in the products that do not equip RTC mode, deep standby RTC mode, and deep standby STOP mode. See Table 1-1.

■ Return from TIMER mode

The CPU returns from TIMER mode in one of the following cases.

● Return by reset

If a reset (INITX pin input reset, low-voltage detection reset, hardware watchdog reset, clock supervisor reset, or anomalous frequency detection reset (main timer mode, PLL timer mode) occurs, the CPU changes to high speed CR run mode regardless of clock mode.

Software watchdog reset is not available in this mode; therefore, the CPU cannot return by this reset.

● Return by interrupt

If an effective NMI interrupt, external interrupt, hardware watchdog timer interrupt, USB wake up interrupt, watch counter interrupt, RTC interrupt, low voltage detection interrupt request is received in TIMER mode, the CPU returns from TIMER mode and changes to RUN mode to fit clock mode indicated in the RCM[2:0] bits of SCM_STR register.

Table 3-6 Operation modes after the CPU returned from TIMER mode by interrupt

	Status of master clock before transition to TIMER mode				
	RCM=000 (High speed CR oscillator)	RCM=001 (Main oscillator)	RCM=010 (PLL oscillator)	RCM=100 (Low speed CR oscillator)	RCM=101 (Sub oscillator)
Operation modes after return by interrupt	High speed CR run mode	Main run mode	PLL run mode	Low speed CR run mode	Sub run mode

● Waiting for oscillation stabilization at return

When the CPU returns by reset, it waits for the stabilization of high and low speed CR clock oscillations. If the CPU returns by interrupt, it does not need to wait for oscillation to stabilize.

● Waiting for the stabilization of the built-in regulator voltage at return

To return from low speed CR timer mode or sub timer mode by reset or interrupt, the voltage stabilization wait time (a few hundred μs) for the operation mode transition of the built-in regulator is ensured automatically. After the wait time has lapsed, return operations are performed.

<Notes>

- When an interrupt priority used for return is not set at a level to return the CPU, clock will be returned with the interrupt but the CPU remains stop state without returning. In order to do this, be sure to set the interrupt priority at a level which CPU is able to return.
- Before transiting to the timer mode, ensure that causes returning from timer modes in Table 3-4 are not set. If these interrupt causes are set, clear them.
- If the transition to TIMER mode is made during debugging, as the clock to the CPU stops, a return to RUN mode cannot be performed by the ICE. Use a return by reset or interrupt.
- In case of transiting to the Low speed CR timer mode or Sub timer mode, ensure that the flash memory automatic algorithm is terminated before executing transition.

3.3. Operation of RTC Mode

RTC mode stops oscillation other than that of the sub clock. All the functions except for the watch counter, RTC, and low voltage detection circuit will be stopped.

■ Functions of RTC mode

● CPU and on-chip memory

In RTC mode, the CPU clock supplied to the CPU and AHB bus clock supplied to the on-chip memory and DMA controller are stopped. However, the contents of on-chip memory are retained. Also, the debug function is stopped.

● Peripheral functions

In RTC mode, all APB bus clocks are stopped, and all resources, excluding the watch counter, RTC, and Low-voltage Detection Circuit, are stopped keeping the last state.

● Watch counter and RTC

Watch counter remains unaffected by RTC mode. It continues to operate according to the setting before transiting to RTC mode and it cannot be returned from RTC mode by the Watch counter interrupt.
RTC remains unaffected by RTC mode. It continues to operate according to the setting before transiting to RTC mode

● Oscillation clocks

Table 3-3 shows the status of each oscillation clock.

● Reset and interrupt

Reset and interrupt can be used to return from RTC mode.

● External bus

The external bus is stopped in RTC mode.

● Status of pin

The system can control whether to retain the status just before the external pin changes to RTC mode or changes to the high impedance status depending on the setting of the SPL bit in the Standby Mode Control Register (STB_CTL).

■ RTC mode setting procedure

Execute the following steps to transit to RTC mode.

1. Set "1" in RTCE bit of RTC mode control register (PMD_CTL) while SORDY bit of System Clock Mode Status Register (SCM_STR) is "1".
2. Write "0x1ACC" to the KEY bit, "0" to the DSTM bit, and "0b10" to the STM bit of the Standby Mode Control Register (STB_CTL). Use the SPL bit to set the status of each pin in RTC mode.
3. Set "1" to the SLEEPDEEP bit of the Cortex-M3 System Control Register.
4. Execute the WFI or WFE instruction.

<Note>

RTCE bit and DSTM bit are not in the products that do not equip RTC mode, deep standby RTC mode, and deep standby stop mode. See Table 1-1.

■ Return from RTC mode

The CPU returns from RTC mode in any one of the following cases.

● Return by reset

If a reset (INITX pin input reset, low-voltage detection reset) occurs, the CPU changes to high-speed CR run mode regardless of clock mode.

Software watchdog reset, hardware watchdog reset, clock supervisor reset, and anomalous frequency detection reset do not operate; therefore, the CPU cannot return by those resets.

● Return by interrupt

If an effective NMI interrupt, external interrupt, USB wake up interrupt, watch counter interrupt, RTC interrupt, or low voltage detection interrupt request is received in RTC mode, the CPU returns from RTC mode and transits to RUN mode to fit clock mode indicated in the RCM[2:0] bits of SCM_STR register.

Table 3-7 Operation modes after the CPU has returned from RTC mode by interrupt.

	Status of master clock before transition to RTC mode				
	RCM = 000 (High speed CR oscillator)	RCM = 001 (Main oscillator)	RCM = 010 (PLL oscillator)	RCM = 100 (Low speed CR oscillator)	RCM = 101 (Sub oscillator)
Operation modes after return by interrupt	High speed CR run mode	Main run mode	PLL run mode	Low speed CR run mode	Sub run mode

● Waiting for oscillation stabilization at return

When the CPU returns by reset, it waits for the stabilization of high and low speed CR clock oscillations. If the CPU returns by interrupt, the oscillation stabilization wait changes by the master clock before transition to the RTC mode as shown in Table 3-8.

Table 3-8 Oscillation stabilization wait when returning by interrupt from RTC mode

		Status of master clock before transition to RTC mode				
		RCM = 000 (High speed CR oscillator)	RCM = 001 (Main oscillator)	RCM = 010 (PLL oscillator)	RCM = 100 (Low speed CR oscillator)	RCM = 101 (Sub oscillator)
Oscillation stabilization wait after returning by interrupt	High speed CR clock	ON	ON	ON	OFF	OFF
	Main clock	MOSCE="0": OFF MOSCE="1": ON	ON	PINC="0": ON PINC="1": OFF	OFF	OFF
	Main PLL clock	OFF	PLLE="0": OFF PLLE="1": ON	ON	OFF	OFF
	Low speed CR clock	ON	ON	ON	ON	ON
	Sub clock	OFF	OFF	OFF	OFF	OFF

● Waiting for the stabilization of the built-in regulator voltage at return

To return from RTC mode, the voltage stabilization wait time (a few hundred μs) for the operation mode transition of the built-in regulator is ensured automatically. After the wait time has lapsed, return operations are performed.

<Notes>

- When an interrupt priority used for return is not set at a level to return the CPU, the clock will be returned by the interrupt but the CPU remains in stop state without returning. In order to do this, be sure to set the interrupt priority at a level which the CPU is able to return.
- Before transiting to the RTC mode, ensure that the causes of return from timer mode in Table 3-4 are not set. If these return causes are set, clear them.
- If the transition to RTC mode is made during debugging, as the clock to the CPU stops, a return to RUN mode cannot be performed by the ICE. Use a return by reset or interrupt.
- In case of transiting to the RTC mode, ensure that the flash memory automatic algorithm is terminated before executing the transition.

3.4. Operations of STOP Mode

STOP mode is used to stop all oscillating operations. Enabling this mode stops all functions, excluding the Low Voltage Detection Circuit.

■ Functions of STOP mode

● CPU and on-chip memory

In STOP mode, the CPU clock supplied to the CPU and AHB bus clock supplied to the on-chip memory and DMA controller are stopped. However, the contents of on-chip memory are retained. The debug function is stopped.

● Peripheral functions

All APB bus clocks are stopped, and all resources, excluding the Low Voltage Detection Circuit, are stopped in the last state.

● Oscillator clocks

All oscillator clocks are stopped.

● Reset and interrupt

Reset and interrupt are available to return from STOP mode.

● External bus

The external bus is stopped in STOP mode.

● Status of pin

The system can control whether to retain the state just before the external pin changes to STOP mode or change to high impedance status depending on the setting of the SPL bit in the Standby Mode Control Register (STB_CTL).

■ STOP mode setting procedure

Execute the following steps to transit to STOP mode.

1. Set "0" in RTCE bit of RTC Mode Control Register (PMD_CTL).
2. Write "0x1ACC" to the KEY bit and "0" to DSTM bit and "0b10" to the STM bit of the Standby Mode Control Register (STB_CTL). Use the SPL bit to set the status of each pin in STOP mode.
3. Set "1" to the SLEEPDEEP bit of the Cortex-M3 System Control Register.
4. Execute the WFI or WFE instruction.

<Note>

RTCE bit and DSTM are not in the products that do not equip RTC mode, deep standby RTC mode, and deep standby STOP mode. See Table 1-1.

■ Return from STOP mode

The CPU returns from STOP mode in one of the following cases.

● Return by reset

If a reset (INITX pin input reset or low-voltage detection reset) occurs, the CPU changes to the high speed CR run mode regardless of clock mode.

Software watchdog reset, hardware watch dog reset, clock supervisor reset, and anomalous frequency detection reset are not available in this mode; therefore, the CPU cannot return by those resets.

● Return by interrupt

If an effective NMI interrupt, external interrupt, USB wake up interrupt, or low voltage detection interrupt request is received in STOP mode, the CPU returns from STOP mode and changes to RUN mode to fit clock mode indicated in the RCM[2:0] bits of SCM_STR register.

Table 3-9 Operation modes after the CPU returned from the STOP mode by interrupt

	Status of master clock before changing to STOP mode				
	RCM=000 (High speed CR oscillator)	RCM=001 (Main oscillator)	RCM=010 (PLL oscillator)	RCM=100 (Low speed CR oscillator)	RCM=101 (Sub oscillator)
Operation modes after return by interrupt	High speed CR run mode	Main run mode	PLL run mode	Low speed CR run mode	Sub run mode

● Waiting for oscillation stabilization at return

When the CPU returns by reset, it waits for the stabilization of high and low speed CR clock oscillations. If the CPU returns by interrupt, the oscillation stabilization wait state varies depending on the master clock that is output before the CPU changes to STOP mode as shown in Table 3-10.

Table 3-10 Waiting for oscillation to stabilize at return from STOP mode by interrupt

		Status of master clock before changing to STOP mode				
		RCM=000 (High speed CR oscillator)	RCM=001 (Main oscillator)	RCM=010 (PLL oscillator)	RCM=100 (Low speed CR oscillator)	RCM=101 (Sub oscillator)
Oscillation stabilization waiting after return by interrupt	High speed CR clock	ON	ON	ON	OFF	OFF
	Main clock	MOSCE="0": OFF MOSCE="1": ON	ON	PINC="0": ON PINC="1": OFF	OFF	OFF
	Main PLL clock	OFF	PLLE="0": OFF PLLE="1": ON	ON	OFF	OFF
	Low speed CR clock	ON	ON	ON	ON	ON
	Sub clock	SOSCE="0": OFF SOSCE="1": ON	SOSCE="0": OFF SOSCE="1": ON	SOSCE="0": OFF SOSCE="1": ON	SOSCE="0": OFF SOSCE="1": ON	ON

- **Waiting for the stabilization of the built-in regulator voltage at return**

  When the CPU returns from STOP mode, the voltage stabilization wait time (a few hundred μs) for the operation mode transition of the built-in regulator is ensured automatically. After the wait time has lapsed, return operations are performed.

<Notes>

- When an interrupt priority used for return is not set at a level to return the CPU, clock will be returned with the interrupt but the CPU remains stop state without returning. In order to do this, be sure to set the interrupt priority at a level which CPU is able to return.
- Before transiting to the stop mode, ensure causes of return timer modes in Table 3-4 are not set. If these interrupt causes are set, clear them.
- If the transition to STOP mode is made during debugging, as the clock to the CPU stops, a return to RUN mode cannot be performed by the ICE. Use a return by reset or interrupt.
- In case of transiting to the STOP mode, ensure that the flash memory automatic algorithm is terminated before executing transition.

---

4. Standby Mode Setting Procedure Examples

This section provides standby mode setting procedure examples.

Figure 4-1 Main timer mode setting procedure example

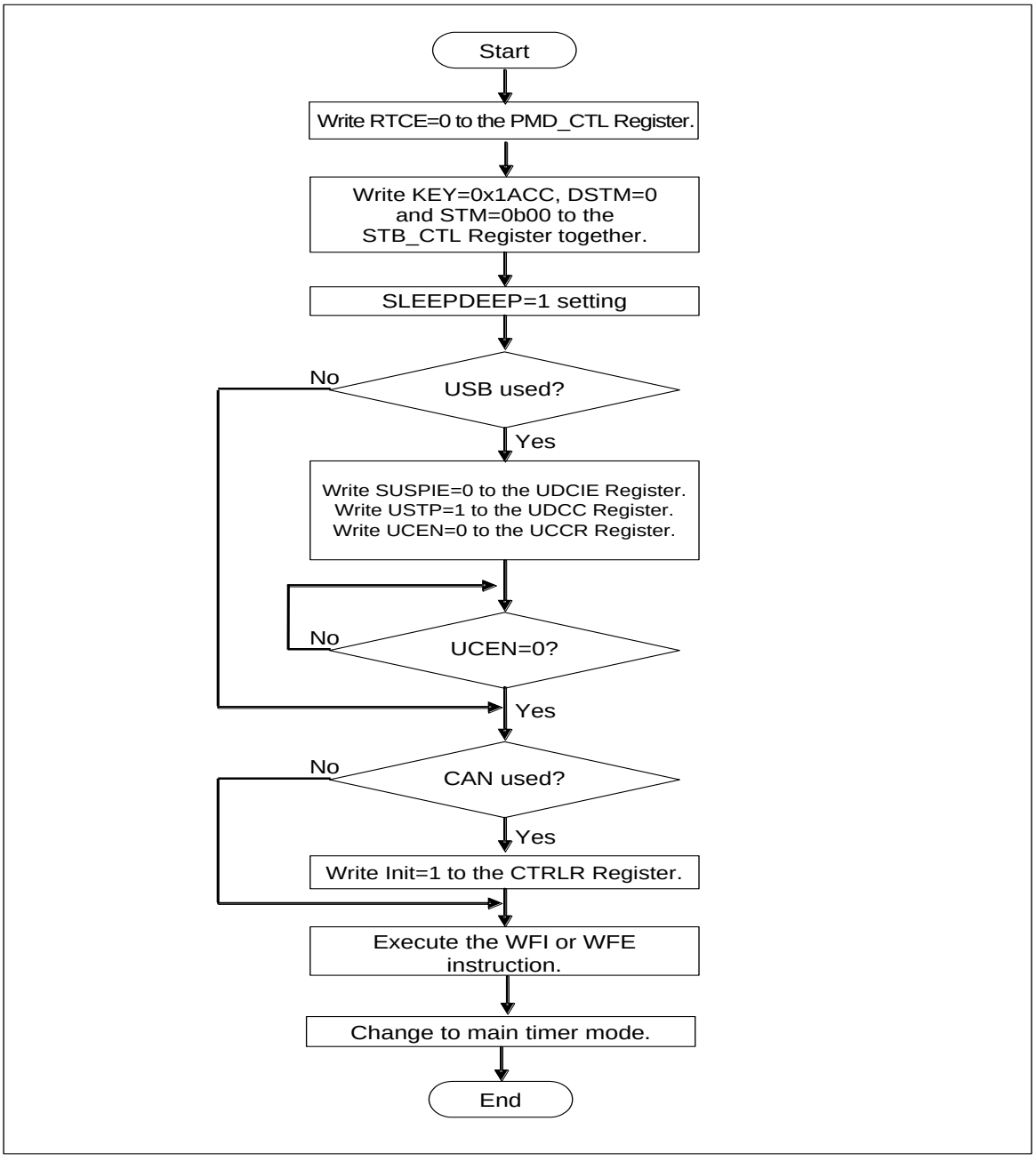

<Note>

RTCE bit and DSTM bit are not in the products that do not equip RTC mode, deep standby RTC mode, and deep standby STOP mode. See Table 1-1.

Figure 4-2 RTC mode setting procedure example (Main clock is selected as a master clock)

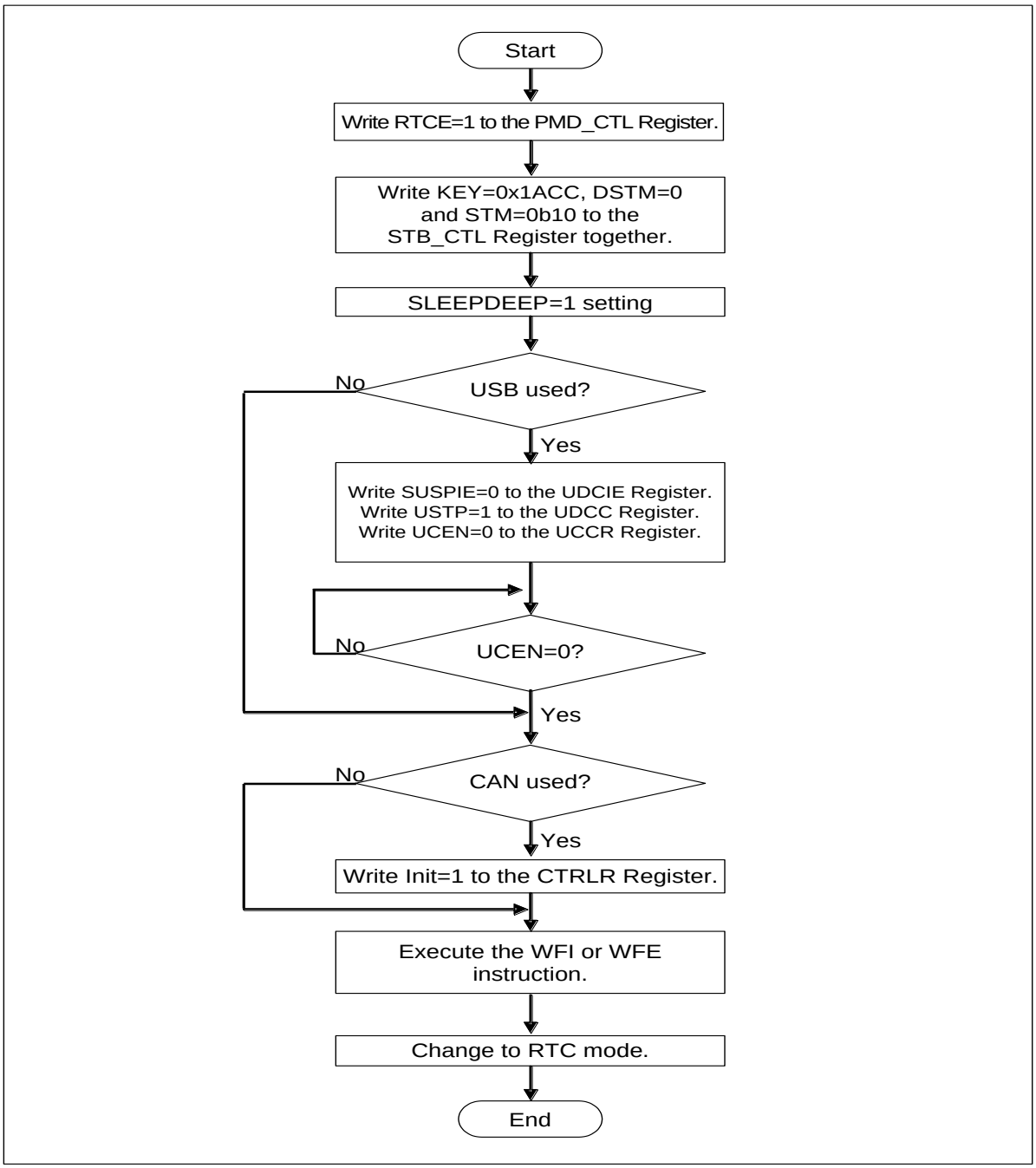

<Notes>

- In case of transiting to the RTC mode, ensure that the flash memory automatic algorithm is terminated before executing the transition.
- Writing "1" to RTCE bit of the RTC Mode Control Register (PMD_CTL) is valid only when the SORDY bit of the System Clock Mode Status Register (SCM_STR) is "1".
- RTCE bit and DSTM bit are not in the products that do not equip RTC mode, deep standby RTC mode, and deep standby STOP mode. See Table 1-1.

Figure 4-3 STOP mode setting procedure example (Main clock is selected as a master clock)

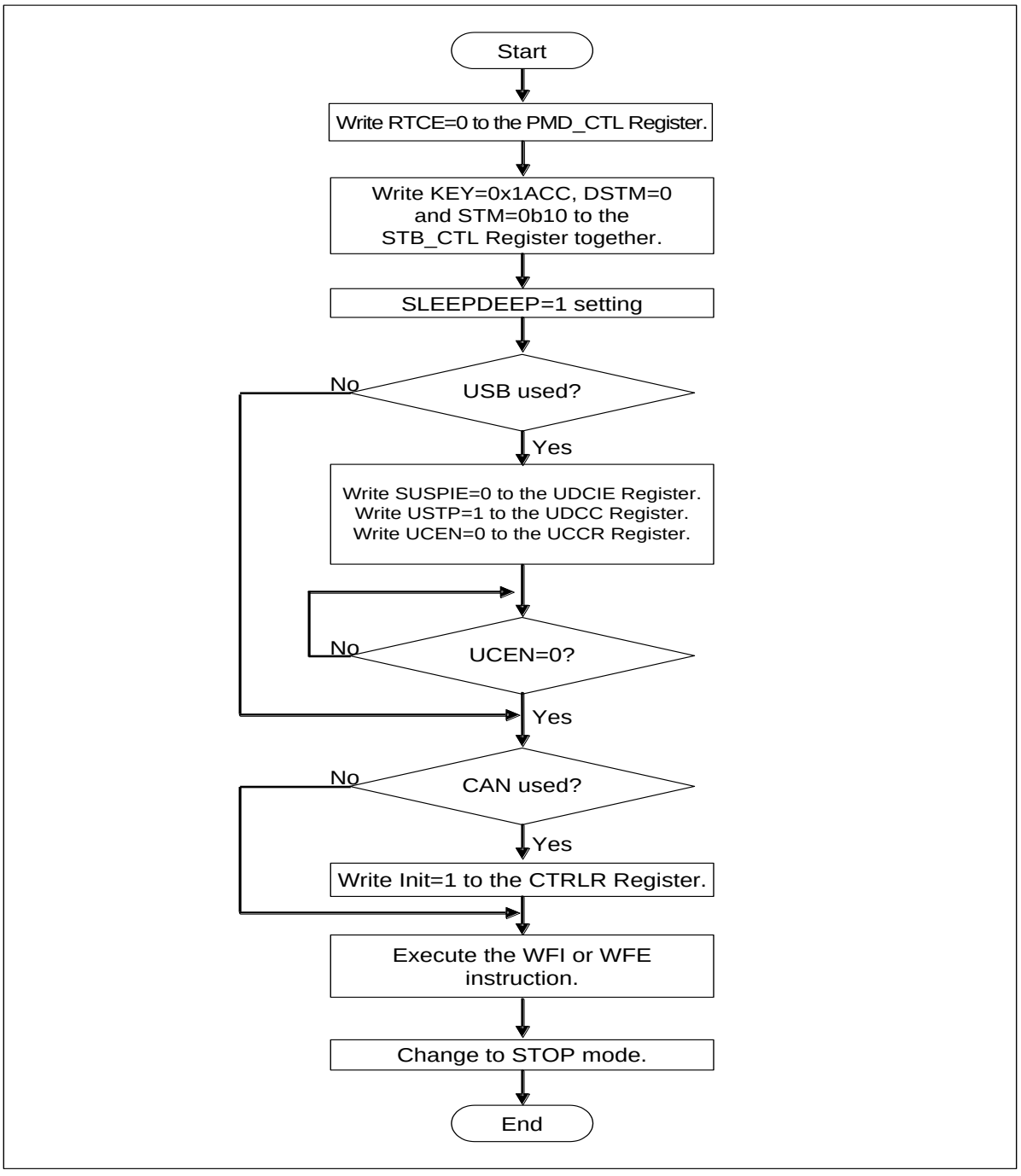

<Notes>

- In case of transiting to the STOP mode, ensure that the flash memory automatic algorithm is terminated before executing the transition.
- RTCE bit and DSTM bit are not in the products that do not equip RTC mode, deep standby RTC mode, and deep standby STOP mode. See Table 1-1.

5. Description of Deep Standby Mode Operation

This section describes the operation of deep standby mode.
Deep standby mode includes deep standby RTC mode and deep standby STOP mode.

■ Clock operation status in deep standby mode

The following shows the status of the oscillation clock, CPU clock, AHB bus clock, and APB bus clock while in deep standby RTC mode and deep standby STOP mode.

Table 5-1 Clock operation state in deep standby mode

<table>
<tr><th></th><th>Deep standby RTC mode</th><th>Deep standby STOP mode</th></tr>
<tr><td>High speed CR clock</td><td rowspan="4">Stopped</td><td rowspan="10">Stopped</td></tr>
<tr><td>Main clock</td></tr>
<tr><td>Main PLL clock</td></tr>
<tr><td>Low speed CR clock</td></tr>
<tr><td>Sub clock</td><td>Operating</td></tr>
<tr><td>USB PLL clock</td><td rowspan="6">Stopped</td></tr>
<tr><td>CPU clock</td></tr>
<tr><td>AHB bus clock</td></tr>
<tr><td>APB0 bus clock</td></tr>
<tr><td>APB1 bus clock</td></tr>
<tr><td>APB2 bus clock</td></tr>
</table>

■ Return factors from deep standby mode

The following shows the return factors from deep standby RTC mode and deep standby STOP mode.

Table 5-2 Return factors from deep standby mode

<table>
<tr><th></th><th>Deep standby RTC mode</th><th>Deep standby STOP mode</th></tr>
<tr><td rowspan="3">Deep standby return factor</td><td>・ INITX pin input reset
・ Low-voltage detection reset</td><td>・ INITX pin input reset
・ Low-voltage detection reset</td></tr>
<tr><td>・ Low-voltage detection interrupt
・ RTC interrupt
・ HDMI-CEC Reception*/ Remote Control Reception interrupt</td><td>・ Low-voltage detection interrupt</td></tr>
<tr><td>・ WKUP pin input</td><td>・ WKUP pin input</td></tr>
</table>

*: HDMI-CEC transmission interrupt is not a return factor.

<Note>

Although each interrupt factor is retained after returning from deep standby mode, interrupt processing will not be executed since NVIC is initialized by deep standby transition reset.

■ Internal power supply status and reset status in deep standby mode

The following shows the power supply status of each function in deep standby mode and initialization status in deep standby transition reset.

Table 5-3 Internal power supply status and initialization status in deep standby mode

	Power supply status	Reset status
CPU	Off	Initialize
On-chip Flash	Off	*1
On-chip SRAM	Off *2	*3
RTC	On	Do not initialize
HDMI-CEC/ Remote Control Reception	On	Do not initialize
Low-voltage detection circuit	On	Do not initialize
GPIO	On	Partly initialize *4
Deep standby control block	On	Do not initialize
Peripheral functions other than the above	Off	Initialize

*1: The contents of on-chip Flash memory are retained.
*2: Some product TYPE can retain the contents of on-chip SRAM.
In the setting to retain on-chip SRAM data, the power of on-chip SRAM is ON.
For the corresponding product TYPE, see Table 1-1.
*3: The contents of on-chip SRAM are not retained when the power is OFF.
In the setting to retain on-chip SRAM data, on-chip SRAM data is retained.
*4: PFRx registers excluding bit4:0 of PFR0 are initialized and others are not initialized.

5.1. Operation of Deep Standby RTC Mode

Deep standby RTC mode stops oscillation other than that of the sub oscillator. All the functions except for RTC, HDMI-CEC/Remote Control Reception and low voltage detection circuit will be stopped. It turns off CPUs, on-chip Flash memory, on-chip SRAM*, and peripheral functions, inside the chip excluding GPIO, RTC, HDMI-CEC/Remote Control Reception, the low-voltage detection circuit.

■ Functions of deep standby RTC mode

● CPU and on-chip memory

In deep standby RTC mode, the CPU clock supplied to CPU and AHB bus clock supplied to on-chip memory and DMA controller are stopped. It turns off the CPU, on-chip Flash memory, and on-chip SRAM*. The contents of the CPU register and on-chip SRAM are not retained*. The contents of on-chip flash memory are retained. Also, the debug function is stopped and turned off.

*: Some product TYPE can retain the data in on-chip SRAM.
In the setting to retain on-chip SRAM data, the power of on-chip SRAM is ON.
For the corresponding product TYPE, see Table 1-1.

● Peripheral functions

All APB bus clocks are stopped, and RTC, HDMI-CEC/ Remote Control Reception, Low-voltage Detection Circuit, and all resources excluding GPIO, are turned off.

● RTC, HDMI-CEC/ Remote Control Reception

RTC and HDMI-CEC/ Remote Control Reception remains unaffected by deep standby RTC mode. It continues to operate according to the setting before transiting to deep standby RTC mode.

● Oscillation clock

The status of each oscillation clock is shown in Table 5-1.

● Reset, interrupt, and WKUP pin input

Reset, interrupt, and WKUP pin input can be used for returning from deep standby RTC mode.

● Status of pin

In deep standby RTC mode, the system can control whether the external pin switches to GPIO or to high impedance status by the SPL bit in the Standby Mode Control Register (STB_CTL).

■ Setting procedure of deep standby RTC mode

Execute the following steps to transit to deep standby RTC mode.

1. Set "1" in RTCE bit of the RTC Mode Control Register (PMD_CTL) while the SORDY bit of the System Clock Mode Status Register (SCM_STR) is "1".
2. Write "0x1ACC" to the KEY bit, "1" to the DSTM bit, and "0b10" to the STM bit of the Standby Mode Control Register (STB_CTL). Use the SPL bit to set the status of each pin in deep standby RTC mode.
3. Set "1" to the SLEEPDEEP bit of the Cortex-M3 System Control Register.
4. Execute the WFI or WFE instruction.

<Note>

RTCE bit and DSTM bit are not in the products that do not equip RTC mode, deep standby RTC mode, and deep standby stop mode. See Table 1-1.

■ Return from deep standby RTC mode

CPU returns from deep standby RTC mode in any one of the following cases.

● Return by reset, interrupt, and WKUP pin input

If a reset (INITX pin input reset and low-voltage detection reset) occurs or if effective RTC interrupt, HDMI-CEC/ Remote Control Reception interrupt, low-voltage detection interrupt, and WKUP pin input request are received while in deep standby RTC mode, the CPU returns from deep standby RTC mode and changes to high speed CR run mode regardless of clock mode by deep standby transition reset occurrence.

Software watchdog reset, hardware watchdog reset, clock supervisor reset, and anomalous frequency detection reset do not operate; therefore, the CPU cannot return by those resets.

● Waiting for oscillation stabilization at return

The oscillation stabilization wait for the high speed CR clock and low speed CR clock is executed regardless of return factor.

● Waiting for the stabilization of the built-in regulator voltage at return

To return from deep standby RTC mode, the voltage stabilization wait time (a few hundred μs) for the operation mode transition of the built-in regulator is ensured automatically. After the wait time has lapsed, return operations are performed.

<Notes>

- Before transiting to the deep standby RTC mode, ensure that the return factor from deep standby RTC mode in Table 5-2 is not set. If the factor is set, clear it.
- If the transition to deep standby RTC mode is made during debugging, a return to RUN mode cannot be performed by the ICE as the debug function is turned off. Use a return by reset, interrupt, or WKUP pin input.
- In the case of transiting to the deep standby RTC mode, ensure that the flash memory automatic algorithm is terminated before executing the transition.
- For TYPE9 products, in the case of disabling the CPU returning from a deep standby mode due to LVD interrupt, set the LVD interrupt return enable bit(WLVDE) in the Deep Standby Return Enable Register (WIER) and Low-voltage detection interrupt enable bit(LVDIE) in the Low-voltage Detection Voltage Control Register(LVD_CTL) to 0.

5.2. Operation of Deep Standby Stop Mode

Deep standby stop mode stops all oscillations. All the functions except for the low voltage detection circuit will be stopped. It turns off, CPUs, on-chip Flash memory, on-chip SRAM*, and peripheral functions, inside the chip excluding GPIO, RTC, HDMI-CEC/Remote Control Reception, the low-voltage detection circuit.

■ Functions of deep standby STOP mode

● CPU and on-chip memory

In deep standby STOP mode, the CPU clock supplied to CPU and AHB bus clock supplied to on-chip memory and DMA controller are stopped. It turns off the CPU and on-chip Flash, on-chip SRAM*. The contents of the CPU register and on-chip SRAM are not retained*. The contents of on-chip flash memory are retained. Also, the debug function is stopped and turned off.

*: Some product TYPE can retain the data in on-chip SRAM.
In the setting to retain on-chip SRAM data, the power of on-chip SRAM is ON.
For the corresponding product TYPE, see Table 1-1.

● Peripherals

All APB bus clocks are stopped, and RTC, HDMI-CEC/ Remote Control Reception, Low-voltage Detection Circuit, and all resources excluding GPIO, are turned off.

● Oscillation clock

All oscillations are stopped.

● Reset and WKUP pin input

Reset and WKUP pin input can be used for returning from deep standby STOP mode.

● Status of pin

The system can control whether the external pin switches to GPIO in deep standby STOP mode or to high impedance status by the SPL bit in the Standby Mode Control Register (STB_CTL).

■ Setting procedure of deep standby STOP mode

Execute the following steps to transit to deep standby STOP mode.

1. Set "0" in RTCE bit of the RTC Mode Control Register (PMD_CTL).
2. Write "0x1ACC" to the KEY bit, "1" to the DSTM bit, and "0b10" to the STM bit of the Standby Mode Control Register (STB_CTL). Use the SPL bit to set the status of each pin in deep standby STOP mode.
3. Set "1" to the SLEEPDEEP bit of the Cortex-M3 System Control Register.
4. Execute the WFI or WFE instruction.

<Note>

RTCE bit and DSTM bit are not in the products that do not equip RTC mode, deep standby RTC mode, and deep standby STOP mode. See Table 1-1.

■ Return from deep standby STOP mode

CPU returns from deep standby STOP mode in any one of the following cases.

● Return by reset, interrupt, and WKUP pin input

If a reset (INITX pin input reset and low-voltage detection reset) occurs, or if effective low-voltage detection interrupt, or WKUP pin input request is received while in deep standby STOP mode, the CPU returns from deep standby STOP mode and changes to high speed CR run mode regardless of clock mode by deep standby transition reset.

Software watchdog reset, hardware watchdog reset, clock supervisor reset, and anomalous frequency detection reset do not operate; therefore, the CPU cannot return by those resets.

● Waiting for oscillation stabilization at return

The oscillation stabilization wait for the high speed CR clock and low speed CR clock is executed regardless of return factor.

● Waiting for the stabilization of the built-in regulator voltage at return

To return from deep standby STOP mode, the voltage stabilization wait time (a few hundred μs) for the operation mode transition of the built-in regulator is ensured automatically. After the wait time has lapsed, return operations are performed.

<Notes>

- Before transiting to the deep standby RTC mode, ensure that the return factor from deep standby RTC mode in Table 5-2 is not set. If the factor is set, clear it.
- If the transition to deep standby stop mode is made during debugging, a return to RUN mode cannot be performed by the ICE as the debug function turns off. Use a return by reset, interrupt, or WKUP pin input.
- In the case of transiting to the deep standby STOP mode, ensure that the flash memory automatic algorithm is terminated before executing the transition.
- For TYPE9 products, in the case of disabling the CPU returning from a deep standby mode due to LVD interrupt, set the LVD interrupt return enable bit(WLVDE) in the Deep Standby Return Enable Register (WIER) and Low-voltage detection interrupt enable bit(LVDIE) in the Low-voltage Detection Voltage Control Register(LVD_CTL) to 0.

---

6. Deep Standby Mode Setting Procedure Examples

This section explains the deep standby mode setting procedure examples.

Figure 6-1 Setting procedure example for deep standby RTC mode

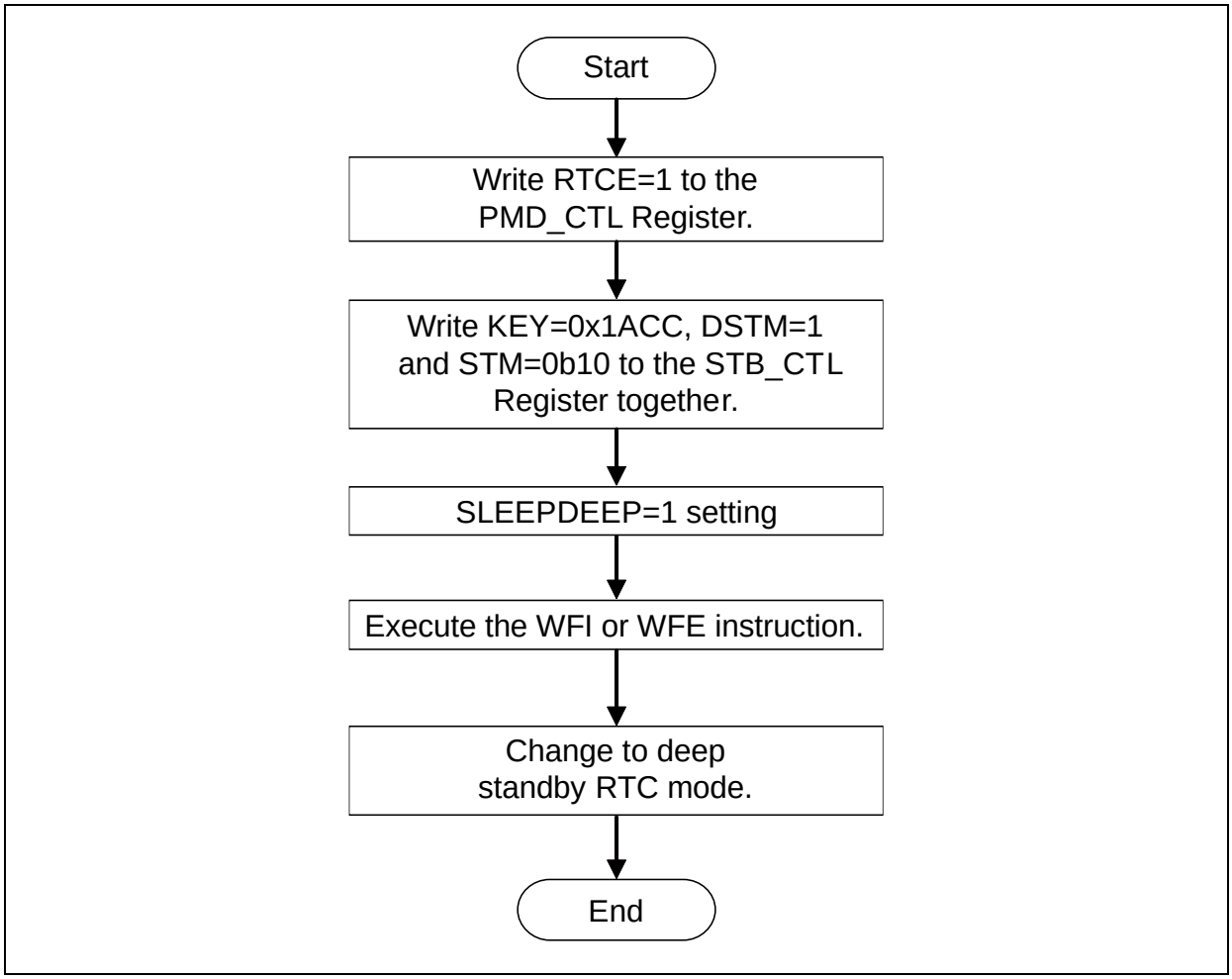

<Notes>

- In case of transiting to the deep standby RTC mode, ensure that the flash memory automatic algorithm is terminated before executing the transition.
- Writing "1" to RTCE bit of the RTC Mode Control Register (PMD_CTL) is valid only when the SORDY bit of the System Clock Mode Status Register (SCM_STR) is "1".

Figure 6-2 Setting procedure example for deep standby STOP mode

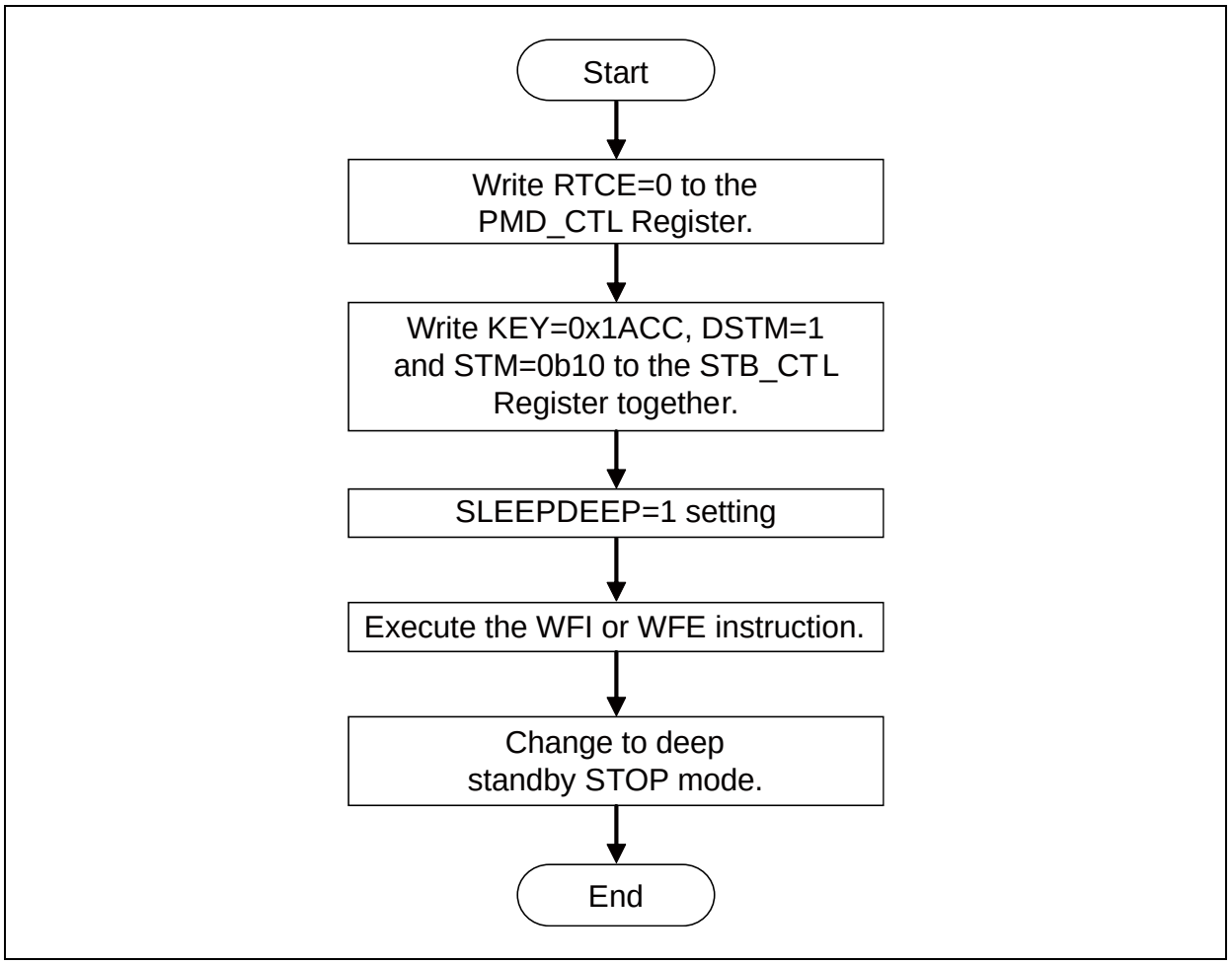

<Note>

In case of transiting to the deep standby STOP mode, ensure that the flash memory automatic algorithm is terminated before executing the transition.

7. Deep Standby Return Factor Determination Procedure

Figure 7-1 shows a procedure example to determine a return from deep standby mode.

Figure 7-1 Procedure example for deep standby return factor determination

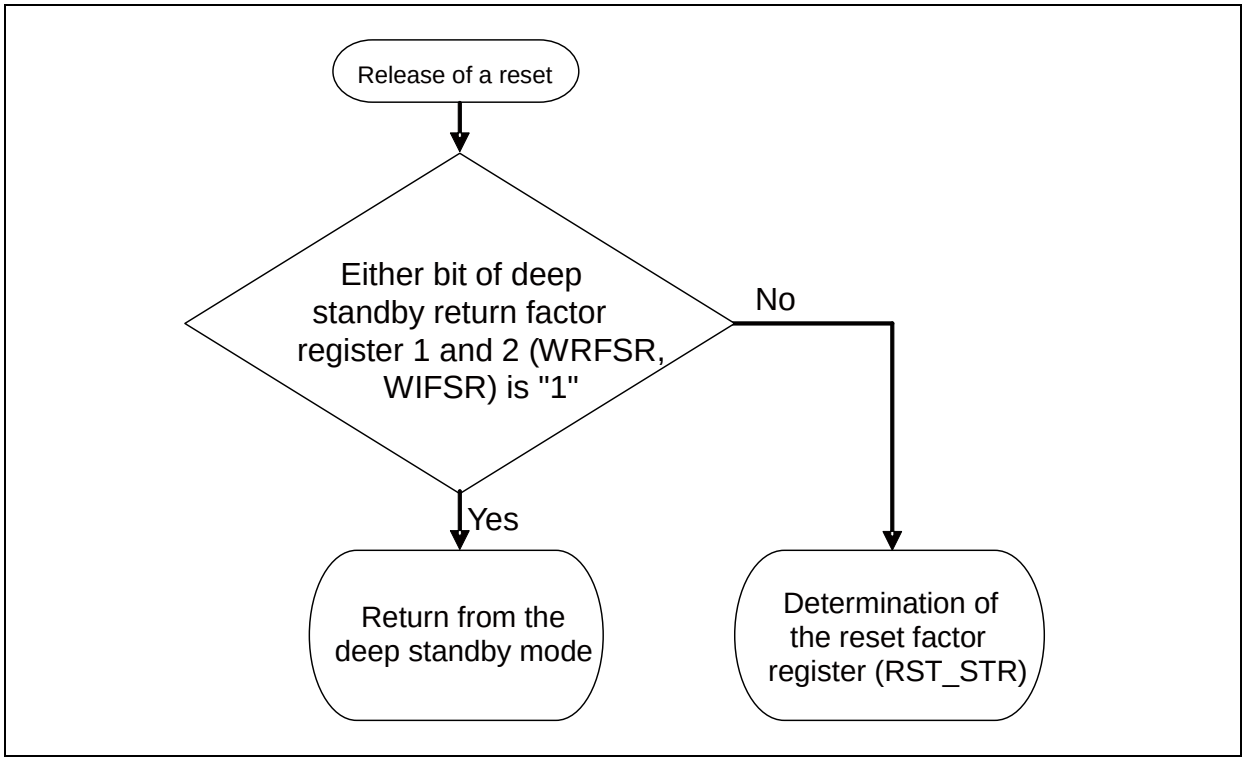

<Note>

- At the transition to deep standby mode, the power supply of the CPU is turned off after deep standby transition reset. Therefore, the value of the reset factor register (RST_STR) is invalid when returning from deep standby mode.
- When any bit of the deep standby mode return factor register 1of TYPE9 product is set to “1”, the value of the deep standby mode return factor register 2 is invalid.

8. List of Low Power Consumption Mode Registers

This section explains the configuration and functions of the registers used in low power consumption mode.

■ List of Low Power Consumption Mode Registers

Abbreviation	Register name	Reference
STB_CTL	Standby Mode Control Register	8.1

● Registers of deep standby control block

Abbreviation	Register name	Reference
REG_CTL	Sub oscillation circuit power supply control register	8.2
RCK_CTL	Sub clock control register	8.3
PMD_CTL	RTC mode control register	8.4
WRFSR	Deep standby return factor register 1	8.5
WIFSR	Deep standby return factor register 2	8.6
WIER	Deep standby return enable register	8.7
WILVR	WKUP pin input level register	8.8
DSRAMR	Deep standby RAM retention register	8.9
BUR01 to 16	Backup registers from 01 to 16	8.10

<Note>

For the System Clock Mode Control Register (SCM_CTL), refer to Chapter "Clock".
Registers of the deep standby control block are not turned off in deep standby mode.

8.1. Standby Mode Control Register (STB_CTL)

Standby mode control register controls standby mode and deep standby mode. The value written to the SPL, DSTM or STM bit is effective only when 0x1ACC is simultaneously written to the KEY bit.

bit	31															16	15							8
Field	KEY																Reserved							
Attribute	R/W																-							
Initial value	0x0000																0x00							

bit	7	6	5	4	3	2	1	0
Field	Reserved			SPL	Reserved	DSTM	STM	
Attribute	-			R/W	-	R/W	R/W	
Initial value	000			0	0	0	00	

[bit31:16] KEY: Standby mode control write control bits

These bits release the SPL bit, DSTM bit or STM bit writing control.

- The value written to the SPL bit, DSTM bit or STM bit is effective only when 0x1ACC is written to the KEY bit.
- If a value other than 0x1ACC is written to the KEY bit, the value written to the SPL bit, DSTM bit or STM bit is not effective.
- 0x0000 is always read in read mode.

[bit15:5] Reserved: Reserved bits

The read value is always "0".
Writing has no effect on the operation.

[bit4] SPL: Standby pin level setting bit

This bit sets the status of pin in TIMER mode, RTC mode, STOP mode, Deep standby RTC mode, or Deep standby STOP mode.

Value	Description
0	Retains status of each pin in TIMER mode, RTC mode, and STOP mode and switches to GPIO in deep standby RTC mode and deep standby stop mode. [Initial value]
1	Sets the status of each pin to high impedance in TIMER mode, RTC mode, STOP mode, Deep standby RTC mode, or Deep standby STOP mode.

[bit3] Reserved: Reserved bit

The read value is always "0".
Writing has no effect on the operation.

[bit2] DSTM: Deep standby mode select bit

This bit selects transiting to either standby mode or deep standby mode.

[bit1:0] STM: Standby mode select bits

These bits are a combination of DSTM bit and RTCE bit of the RTC Mode Control Register (PMD_CTL) and select transiting to any one of the following: TIMER mode, RTC mode, STOP mode, deep standby RTC mode, and deep standby STOP mode.

DSTM	STM		PMD_CTL: RTCE	Description
	bit1	bit0		
0	0	0	0	TIMER mode [initial value]
0	0	0	1	Setting is prohibited.
0	0	1	0	Setting is prohibited
0	0	1	1	Setting is prohibited
0	1	0	0	STOP mode
0	1	0	1	RTC mode
0	1	1	0	Setting is prohibited
0	1	1	1	Setting is prohibited
1	0	0	0	Setting is prohibited
1	0	0	1	Setting is prohibited
1	0	1	0	Setting is prohibited
1	0	1	1	Setting is prohibited
1	1	0	0	Deep standby STOP mode
1	1	0	1	Deep standby RTC mode
1	1	1	0	Setting is prohibited
1	1	1	1	Setting is prohibited

<Notes>

- The written value to SPL bit, DSTM bit, STM bit of Standby Mode Control Register (STB_CTL) is valid only when "0x1ACC" is written to KEY bit at the same time. If a value other than "0x1ACC" is written to KEY bit, writing to SPL bit, DSTM bit, and STM bit becomes invalid.
- RTCE bit and DSTM bit are not in the products that do not equip deep standby RTC mode and deep standby STOP mode. See Table 1-1. For the products that do not equip these modes, set DSTM bit and RTCE bit to "0".

8.2. Sub Oscillation Circuit Power Supply Control Register (REG_CTL)

Sub oscillation circuit power supply control register controls the power supply for sub oscillation circuit. This register is available only in certain product TYPE.
For information about compatible product TYPE, refer to Table 1-2.

bit	7	6	5	4	3	2	1	0
Field	Reserved					ISUBSEL		Reserved
Attribute	-					R/W		-
Initial value	00000					10		0

[bit7:3] Reserved: Reserved bits

The read value is always "0".
Writing has no effect on the operation.

[bit2:1] ISUBSEL: Sub oscillation circuit current setting bits

These bits set the current to sub oscillation circuit.

bit2	bit1	Description
0	0	Setting is prohibited
0	1	Setting is prohibited
1	0	360nA [initial value]
1	1	Setting is prohibited

[bit0] Reserved: Reserved bit

The read value is always "0".
Writing has no effect on the operation.

<Notes>

- This register is available only for the specific product TYPEs. For the products equipped with this register, see Table 1-2. It is prohibited to write to this register with the products which do not equip this.
- This register is not initialized by software reset or deep standby transition reset.

8.3. Sub Clock Control Register (RCK_CTL)

Sub clock control register controls the clock to RTC, HDMI-CEC/remote control reception.
Power consumption can be reduced by stopping the clock supply to unused resource.
This register is available only in certain product TYPE.
For information about compatible product TYPE, refer to Table 1-2.

bit	7	6	5	4	3	2	1	0
Field	Reserved						CECCKE	RTCCKE
Attribute	-						R/W	R/W
Initial value	000000						0	1

[bit7:2] Reserved: Reserved bits

The read value is always "0".
Writing has no effect on the operation.

[bit1] CECCKE : CEC clock control bit

This bit controls sub clock for HDMI-CEC/remote control reception macro.

Value	Description
0	Sub clock is not supplied to HDMI-CEC/remote control reception macro. [Initial value]
1	Sub clock is supplied to HDMI-CEC/remote control reception macro.

[bit0] RTCCKE : RTC clock control bit

This bit controls sub clock for RTC macro.

Value	Description
0	Sub clock is not supplied to RTC macro.
1	Sub clock is supplied to RTC macro. [Initial value]

<Note>

This register is available only for the specific product TYPEs. For the products equipped with this register, see Table 1-2. It is prohibited to write to this register with the products which do not equip this.

8.4. RTC Mode Control Register (PMD_CTL)

RTC mode control register controls either RTC mode or STOP mode and either deep standby RTC mode or deep standby STOP mode.
This register is available only in certain product TYPE. For information about compatible product TYPE, see Table 1-1.

bit	7	6	5	4	3	2	1	0
Field	Reserved							RTCE
Attribute	-							R/W
Initial value	0000000							0

[bit7:1] Reserved: Reserved bits

The read value is always "0".
Writing has no effect on the operation.

[bit0] RTCE: RTC mode control bit

This bit selects transiting to either RTC mode or STOP mode and either deep standby RTC mode or deep standby stop mode.

Value	Description
0	STOP mode and deep standby stop mode [initial value]
1	RTC mode and deep standby RTC mode

Standby mode is selected when DSTM bit is "0" and deep standby mode is selected when DSTM bit is "1".

<Notes>

- This register does not exist in the products that do not equip RTC mode and deep standby RTC mode. See Table 1-1. Do not write to this register of the product, which does not have those modes.
- This register is not initialized by software reset and deep standby transition reset.
- Writing "1" to RTCE bit is valid only when the SORDY bit of the System Clock Mode Status Register (SCM_STR) is "1".
- Sub oscillation is enabled when RTCE bit is "1" regardless of the SOSCE bit value of System Clock Mode Control Register (SCM_CTL) and the SORDY bit value of the System Clock Mode Status Register (SCM_STR).

8.5. Deep Standby Return Factor Register 1 (WRFSR)

Deep standby return factor register 1 indicates return factors by low-voltage detection reset and the INITX pin input reset that occur in deep standby mode.

bit	7	6	5	4	3	2	1	0
Field	Reserved						WLVDH	WINITX
Attribute	-						R/W	R/W
Initial value	000000						0	0

[bit7:2] Reserved: Reserved bits

The read value is always "0".
Writing has no effect on the operation.

[bit1] WLVHD: Low-voltage detection reset return bit

This bit indicates returning from deep standby mode by low-voltage detection reset.

Value	Description
0	Not returned by low-voltage detection reset [initial value]
1	Returned by low-voltage detection reset

[bit0] WINITX: INITX pin input reset return bit

This bit indicates returning from deep standby mode by INITX pin input reset.

Value	Description
0	Not returned by INITX pin input reset [initial value]
1	Returned by INITX pin input reset

<Notes>

- For TYPE3 and TYPE7 products
  This register is initialized by power-on reset and low-voltage detection reset (when SVHR = 0001). It is not initialized by other reset factors. Also, all bits are cleared by reading.
- For products other than TYPE3 and TYPE7
  This register is initialized by power-on reset and low-voltage detection reset. It is not initialized by other reset factors. Also, all bits are cleared by reading.
- Before transiting to the deep standby mode, ensure that the return factor from the deep standby mode is not set. If the factor is set, clear it.
- This register can be set only in the deep standby mode.

8.6. Deep Standby Return Factor Register 2 (WIFSR)

Deep standby return factor register 2 indicates return factors by WKUPx pin input, low-voltage detection interrupt, and RTC interrupt, and HDMI-CEC/Remote Control Reception interrupt that occur in deep standby mode.

bit	15	14	13	12	11	10	9	8
Field	Reserved						WCEC1I	WCEC0I
Attribute	-						R	R
Initial value	000000						0	0

bit	7	6	5	4	3	2	1	0
Field	WUI5	WUI4	WUI3	WUI2	WUI1	WUI0	WLVDI	WRTCI
Attribute	R	R	R	R	R	R	R	R
Initial value	0	0	0	0	0	0	0	0

[bit15:10] Reserved: Reserved bits

The read value is always "0".
Writing has no effect on the operation.

[bit9] WCEC1I: CEC ch.1 interrupt return bit

This bit indicates returning from deep standby mode by HDMI-CEC/ Remote Control Reception ch.1 interrupt.

Value	Description
0	Not returned by HDMI-CEC/ Remote Control Reception ch.1 interrupt [initial value]
1	Returned by HDMI-CEC/ Remote Control Reception ch.1 interrupt

[bit8] WCEC0I: CEC ch.0 interrupt return bit

This bit indicates returning from deep standby mode by HDMI-CEC/ Remote Control Reception ch.0 interrupt.

Value	Description
0	Not returned by HDMI-CEC/ Remote Control Reception ch.0 interrupt [initial value]
1	Returned by HDMI-CEC/ Remote Control Reception ch.0 interrupt

[bit7:2] WUI5 to WUI0: WKUPx pin input return bits

These bits indicate returning from deep standby mode by WKUPx pin input.

Value	Description
0	Not returned by WKUPx pin input [initial value]
1	Returned by WKUPx pin input

[bit1] WLVDI: LVD interrupt return bit

This bit indicates returning from deep standby mode by LVD interrupt.

Value	Description
0	Not returned by LVD interrupt [initial value]
1	Returned by LVD interrupt

[bit0] WRTCI: RTC interrupt return bit

This bit indicates returning from deep standby mode by RTC interrupt.

Value	Description
0	Not returned by RTC interrupt [initial value]
1	Returned by RTC interrupt

<Notes>

- For TYPE3 and TYPE7 products
  This register is initialized by power-on reset and low-voltage detection reset (when SVHR = 0001). It is not initialized by other reset factor. Also, all bits are cleared by reading.
- For products other than TYPE3 and TYPE7
  This register is initialized by power-on reset and low-voltage detection reset. It is not initialized by other reset factor. Also, all bits are cleared by reading.
- Before transiting to the deep standby mode, ensure that the return factor from deep standby mode is not set. If the factor is set, clear it.
- This register can be set only in the deep standby mode.

8.7. Deep Standby Return Enable Register (WIER)

Deep standby return enable register enables a return by WKUPx pin input, low-voltage detection interrupt, RTC interrupt, and HDMI-CEC/Remote Control Reception interrupt that occur in deep standby mode.

bit	15	14	13	12	11	10	9	8
Field	Reserved						WCEC1E	WCEC0E
Attribute	-						R/W	R/W
Initial value	000000						0	0

bit	7	6	5	4	3	2	1	0
Field	WUI5E	WUI4E	WUI3E	WUI2E	WUI1E	Reserved	WLVDE	WRTCE
Attribute	R/W	R/W	R/W	R/W	R/W	-	R/W	R/W
Initial value	0	0	0	0	0	0	0	0

[bit15:10] Reserved: Reserved bits

The read value is always "0".
Writing has no effect on the operation.

[bit9] WCEC1E: HDMI-CEC/ Remote Control Reception ch.1 interrupt return enable bit

A return from deep standby mode by HDMI-CEC/ Remote Control Reception ch.1 interrupt is disabled or enabled.

Value	Description
0	Disable a return by HDMI-CEC/ Remote Control Reception ch.1 interrupt [initial value]
1	Enable a return by HDMI-CEC/ Remote Control Reception ch.1 interrupt

[bit8] WCEC0E: HDMI-CEC/ Remote Control Reception ch.0 interrupt return enable bit

A return from deep standby mode by HDMI-CEC/ Remote Control Reception ch.0 interrupt is disabled or enabled.

Value	Description
0	Disable a return by HDMI-CEC/ Remote Control Reception ch.0 interrupt [initial value]
1	Enable a return by HDMI-CEC/ Remote Control Reception ch.0 interrupt

[bit7:3] WUI5E to WUI1E: WKUPx pin input return enable bits

A return from deep standby mode by WKUPx pin input is disabled or enabled.

Value	Description
0	Disable a return by WKUPx pin input [initial value]
1	Enable a return by WKUPx pin input

[bit2] Reserved: Reserved bit

The read value is always "0".
Writing has no effect on the operation.

[bit1] WLVDE: LVD interrupt return enable bit

A return from deep standby mode by LVD interrupt is disabled or enabled.

Value	Description
0	Disable a return by LVD interrupt [initial value]
1	Enable a return by LVD interrupt

[bit0] WRTCE: RTC interrupt return enable bit

A return from deep standby mode by RTC interrupt is disabled or enabled.

Value	Description
0	Disable a return by RTC interrupt [initial value]
1	Enable a return by RTC interrupt

<Notes>

- A return from deep standby mode by WKUP0 pin input is always enabled.
- This register is not initialized by deep standby transition reset.

8.8. WKUP Pin Input Level Register (WILVR)

WKUP pin input level register selects a valid level of WKUP1 to WKUP5 pin inputs that occur in deep standby mode.

bit	7	6	5	4	3	2	1	0
Field	Reserved			WUI5LV	WUI4LV	WUI3LV	WUI2LV	WUI1LV
Attribute	-			R/W	R/W	R/W	R/W	R/W
Initial value	000			0	0	0	0	0

[bit7:5] Reserved: Reserved bits

The read value is always "0".
Writing has no effect on the operation.

[bit4:0] WUI5LV to WUI1LV: WKUPx pin input level select bits

A valid level of WKUPx pin input is selected.

Value	Description
0	Request a return when WKUPx pin input is Low level [initial value]
1	Request a return when WKUPx pin input is High level

<Notes>

- WKUP0 pin input always requests a return in Low level
  For example, it returns as soon as it transits to deep standby mode when WKUP1 inputs in Low level (WUI1LV = 0).
- This register is not initialized by deep standby transition reset.

8.9. Deep Standby RAM Retention Register (DSRAMR)

Deep standby RAM retention register controls the retention of the on-chip SRAM contents in deep standby modes.
This register is available only in the product TYPE that can retain the on-chip SRAM data.
For the corresponding product TYPE, see Table 1-1.

bit	7	6	5	4	3	2	1	0
Field	Reserved						SRAMR	
Attribute	-						R/W	
Initial value	000000						00	

[bit7:2] Reserved: Reserved bits

The read value is always "0".
Writing has no effect on the operation.

[bit1:0] SRAMR: On-chip SRAM retention control bits

These bits control the retention of the on-chip SRAM contents in deep standby modes.

■ Products other than TYPE12

bit1	bit0	Description
0	0	Not retain the on-chip SRAM contents in the deep standby mode. [initial value]
0	1	Setting is prohibited
1	0	Setting is prohibited
1	1	Retain the on-chip SRAM contents in the deep standby mode.

■ TYPE12 products

bit1	bit0	Description
0	0	Not retain the on-chip SRAM contents in the deep standby mode. [initial value]
0	1	Retain the on-chip SRAM1 contents in the deep standby mode. Not retain the on-chip SRAM0 contents.
1	0	Retain the on-chip SRAM0 contents in the deep standby mode. Not retain the on-chip SRAM1 contents.
1	1	Retain the on-chip SRAM contents in the deep standby mode.

<Note>
This register is initialized by power-on reset and low-voltage detection reset. It is not initialized by other reset factor.

8.10. Backup Registers from 01 to 16 (BUR01 to 16)

Backup registers are general registers that retain values in deep standby mode.

bit	31	24	23	16	15	8	7	0
Field	BUR04		BUR03		BUR02		BUR01	
Attribute	R/W		R/W		R/W		R/W	
Initial value	0x00		0x00		0x00		0x00	

bit	31	24	23	16	15	8	7	0
Field	BUR08		BUR07		BUR06		BUR05	
Attribute	R/W		R/W		R/W		R/W	
Initial value	0x00		0x00		0x00		0x00	

bit	31	24	23	16	15	8	7	0
Field	BUR12		BUR11		BUR10		BUR09	
Attribute	R/W		R/W		R/W		R/W	
Initial value	0x00		0x00		0x00		0x00	

bit	31	24	23	16	15	8	7	0
Field	BUR16		BUR15		BUR14		BUR13	
Attribute	R/W		R/W		R/W		R/W	
Initial value	0x00		0x00		0x00		0x00	

<Notes>

- For TYPE3 and TYPE7 products
  This register is initialized by power-on reset and low-voltage detection reset (when SVHR = 0001). It is not initialized by other reset factor.
- For products other than TYPE3 and TYPE7
  This register is initialized by power-on reset and low-voltage detection reset. It is not initialized by other reset factor.

9. Usage Precautions

Note on the following points when using low power consumption mode.

For the pin shared for analog input and WKUP, WKUPx pin input is blocked when ADE bit of corresponding analog input setting register (ADE) is set to "1" even if the recovery by WKUPx pin input is allowed. To use the recovery by WKUPx pin input, set ADE bit of corresponding analog input setting register (ADE) to "0" before shifting to deep standby mode.

CHAPTER 7-1: Configuration of interrupts

This chapter explains the configuration of interrupt controller.

1. Configuration

1. Configuration

For the configuration of the interrupt controller, see the descriptions of related chapters shown below.

■ Reference chapter of the interrupt controller

Table 1-1 Correspondence table for Interrupt chapter

Product TYPE	Interrupt factor vector relocate function	IRQCMODE setting	Reference
TYPE0 to TYPE2	Not available	-	Chapter "Interrupts (A)"
TYPE3, TYPE7	Not available	-	Chapter "Interrupts (C)"
TYPE4, to TYPE6, TYPE8, to TYPE12	Available	IRQCMODE=0 Relocate not selected (Compatible with TYPE0/1/2)	Chapter "Interrupts (A)"
		IRQCMODE=1 Relocate selected	Chapter "Interrupts (B)"

■ Interrupt factor vector relocate function

The product mounting the interrupt factor vector relocate function is equipped with the IRQCMODE register, RCINTSEL0 and RCINTSEL1 registers

Two types of the interrupt factor vector shown in Table 1-2 can be selected by the IRQCMODE register setting. Moreover, the arbitrary interrupt factor can be selected with the RCINTSEL0 and RCINTSEL1 registers. (For details on the IRQCMODE register, RCINTSEL0 and RCINTSEL1 registers, see "Interrupts (B)".)

Table 1-2 Exceptions and Interrupt factor vectors list

Vector No.	IRQ No.	Exceptions and Interrupt factor vectors	
		IRQCMODE=0*	IRQCMODE=1
0	-	Stack pointer initial value	
1	-	Reset	
2	-	Non-Maskable Interrupt (NMI) / Hardware Watchdog Timer	
3	-	Hard Fault	
4	-	Memory Management	
5	-	Bus Fault	
6	-	Usage Fault	
7 to 10	-	Reserved	
11	-	SVCall (Supervisor Call)	
12	-	Debug Monitor	
13	-	Reserved	
14	-	PendSV	
15	-	SysTick	

Vector No.	IRQ No.	Exceptions and Interrupt factor vectors	
		IRQCMODE=0*	IRQCMODE=1
16	0	Anomalous Frequency Detection by Clock Supervisor (FCS)	
17	1	Software Watchdog Timer	
18	2	Low Voltage Detector (LVD)	
19	3	MFT unit0, unit1, unit2 Wave Form Generator / DTIF(Motor Emergency Stop)	Selecting the interrupt factor with RCINTSEL0 register
20	4	External Pin Interrupt ch.0 to ch.7	Selecting the interrupt factor with RCINTSEL0 register
21	5	External Pin Interrupt ch.8 to ch.31	Selecting the interrupt factor with RCINTSEL0 register
22	6	Dual Timer / Quad Counter (QPRC) ch.0, ch.1, ch.2	Selecting the interrupt factor with RCINTSEL0 register
23	7	Reception Interrupt of MFS ch.0 / Reception Interrupt of MFS ch.8	Selecting the interrupt factor with RCINTSEL1 register
24	8	Transmission Interrupt and Status Interrupt of MFS ch.0 / Transmission Interrupt and Status Interrupt of MFS ch.8	Selecting the interrupt factor with RCINTSEL1 register
25	9	Reception Interrupt of MFS ch.1 / Reception Interrupt of MFS ch.9	Selecting the interrupt factor with RCINTSEL1 register
26	10	Transmission Interrupt and Status Interrupt of MFS ch.1 / Transmission Interrupt and Status Interrupt of MFS ch.9	Selecting the interrupt factor with RCINTSEL1 register
27	11	Reception Interrupt of MFS ch.2 / Reception Interrupt of MFS ch.10	MFT unit0 Wave Form Generator / DTIF(Motor Emergency Stop) / Reception Interrupt, Transmission Interrupt, and Status Interrupt of MFS ch.8
28	12	Transmission Interrupt and Status Interrupt of MFS ch.2 / Transmission Interrupt and Status Interrupt of MFS ch.10	External pin interrupt ch.0 to ch.7
29	13	Reception Interrupt of MFS ch.3 / Reception Interrupt of MFS ch.11	External pin interrupt ch.8 to ch.31
30	14	Transmission Interrupt and Status Interrupt of MFS ch.3 / Transmission Interrupt and Status Interrupt of MFS ch.11	Dual timer / Quad counter (QPRC) ch.0
31	15	Reception Interrupt of MFS ch.4 / Reception Interrupt of MFS ch.12	Reception Interrupt, Transmission Interrupt and Status Interrupt of MFS ch.0
32	16	Transmission Interrupt and Status Interrupt of MFS ch.4 / Transmission Interrupt and Status Interrupt of MFS ch.12	Reception Interrupt, Transmission Interrupt and Status Interrupt of MFS ch.1
33	17	Reception Interrupt of MFS ch.5 / Reception Interrupt of MFS ch.13	Reception Interrupt, Transmission Interrupt and Status Interrupt of MFS ch.2
34	18	Transmission Interrupt and Status Interrupt of MFS ch.5 / Transmission Interrupt and Status Interrupt of MFS ch.13	Reception Interrupt, Transmission Interrupt and Status Interrupt of MFS ch.3
35	19	Reception Interrupt of MFS ch.6 / Reception Interrupt of MFS ch.14	Reception Interrupt of MFS ch.4

Vector No.	IRQ No.	Exceptions and Interrupt factor vectors	
		IRQCMODE=0*	IRQCMODE=1
36	20	Transmission Interrupt and Status Interrupt of MFS ch.6 / Transmission Interrupt and Status Interrupt of MFS ch.14	Transmission Interrupt and Status Interrupt of MFS ch.4
37	21	Reception Interrupt of MFS ch.7 / Reception Interrupt of MFS ch.15	Reception Interrupt of MFS ch.5
38	22	Transmission Interrupt and Status Interrupt of MFS ch.7 / Transmission Interrupt and Status Interrupt of MFS ch.15	Transmission Interrupt and Status Interrupt of MFS ch.5
39	23	PPG ch.0/2/4/8/10/12/16/18/20	
40	24	External Main OSC / External Sub OSC / Main PLL / PLL for USB/Watch Counter/Real Time Counter	
41	25	A/D Converter unit0	A/D Converter unit0 /Reception Interrupt, Transmission Interrupt, and Status Interrupt of MFS ch.9
42	26	A/D Converter unit1	A/D Converter unit1 /Reception Interrupt, Transmission Interrupt, and Status Interrupt of MFS ch.10
43	27	A/D Converter unit2 / LCD Controller	A/D Converter unit2/ LCD Controller / Reception Interrupt, Transmission Interrupt, and Status Interrupt of MFS ch.11
44	28	MFT unit0, unit1, unit2 Free-run Timer	MFT unit0 Free-run Timer, Input Capture, Output Compare
45	29	MFT unit0, unit1, unit2 Input Capture	MFT unit1 Free-run Timer, Input Capture, Output Compare
46	30	MFT unit0, unit1, unit2 Output Compare	MFT unit2 Free-run Timer, Input Capture, Output Compare
47	31	Base Timer ch.0 to ch.7	
48	32	CAN ch.0 / Ethernet ch.0	CAN ch.0 / Ethernet ch.0 / Reception Interrupt, Transmission Interrupt, and Status Interrupt of MFS ch.12
49	33	CAN ch.1 / Ethernet ch.1	CAN ch.1 / Ethernet ch.1/ /Reception Interrupt, Transmission Interrupt, and Status Interrupt of MFS ch.13
50	34	USB ch.0 Device (DRQ of End Point 1 to 5)	
51	35	USB ch.0 Device (DRQI of End Point 0, DRQO and each status) /USB ch.0 HOST (each status)	
52	36	USB ch.1 Device (DRQ of End Point 1 to 5) / HDMI-CEC, Remote Control Reception ch.0	
53	37	USB ch.1 Device (DRQI of End Point 0, DRQO and each status) /USB ch.1 HOST (each status) / HDMI-CEC, Remote Control Reception ch.1	
54	38	DMA Controller (DMAC) ch.0	DMA Controller (DMAC) ch.0 to ch.7

Vector No.	IRQ No.	Exceptions and Interrupt factor vectors	
		IRQCMODE=0*	IRQCMODE=1
55	39	DMA Controller (DMAC) ch.1	MFT unit1 Wave Form Generator / DTIF(Motor Emergency Stop) / Reception Interrupt, Transmission Interrupt, and Status Interrupt of MFS ch.14
56	40	DMA Controller (DMAC) ch.2	MFT unit2 Wave Form Generator / DTIF(Motor Emergency Stop) / Reception Interrupt, Transmission Interrupt, and Status Interrupt of MFS ch.15
57	41	DMA Controller (DMAC) ch.3	Quad counter (QPRC) ch.1
58	42	DMA Controller (DMAC) ch.4	Reception Interrupt of MFS ch.6
59	43	DMA Controller (DMAC) ch.5	Transmission Interrupt and Status Interrupt of MFS ch.6
60	44	DMA Controller (DMAC) ch.6	Reception Interrupt of MFS ch.7
61	45	DMA Controller (DMAC) ch.7	Transmission Interrupt and Status Interrupt of MFS ch.7
62	46	Base Timer ch.8 to ch.15	
63	47	Flash RDY, HANG interrupt	Quad counter (QPRC) ch.2 / Flash RDY, HANG interrupt

*: Compatible with TYPE0 to TYPE2.

CHAPTER 7-2: Interrupts (A)

This chapter explains the interrupt controller and peripheral interrupt requests.

1. Overview
2. Configuration
3. Exception and Interrupt Factor Vectors
4. Registers
5. Usage Precautions

1. Overview

The interrupt controller determines the priority of interrupt requests and sends the requests to the CPU. The Cortex-M3 CPU core is equipped with the nested vectored interrupt controller (NVIC) internally within the core. Interrupt signals from several peripherals are aggregated and input to a single interrupt factor vector. The interrupt requests that have occurred can be checked using the interrupt request batch read register. Furthermore, for some of the interrupt factors, the interrupt requests can be configured to be converted into DMA request signals.

■ Features of the Nested Vectored Interrupt Controller (NVIC)

- 48 maskable peripheral interrupt channels (not including the 16 exception interrupts of Cortex-M3)
- 16 programmable interrupt priority levels (using 4-bit prioritized interrupts)
- Facilitates low-latency exception and interrupt handling
- Implements System Control Registers
- Supports non-maskable interrupt (NMI) input

The NVIC and the processor core interface are closely coupled, providing mechanisms that enable low-latency interrupt processing and efficient processing of late arriving interrupts. The NVIC maintains the nested interrupt information to enable tail chaining of interrupts.

All interrupts are managed by the NVIC, including core exceptions. See "Chapter 5: Exceptions" and "Chapter 8: Nested Vectored Interrupt Controller" in the "Cortex-M3 Technical Reference Manual" published by Arm for details on exceptions and NVIC.

<Note>

In the "Cortex-M3 Technical Reference Manual", all exception type:IRQ are defined as external interrupt inputs. In this manual, exception type:IRQ are expressed as peripheral interrupts. Peripheral interrupts include "External Interrupt and NMI Control Unit" interrupts from external pins and interrupts from peripheral resources within the LSI.

■ Interrupt Factor Aggregation Function

The interrupt request signals from each peripheral resource are aggregated into 48 sources and input to the NVIC. Furthermore, the interrupt request signal from the external NMIX pin is logically OR'ed with the hardware watchdog interrupt signal and input to the NVIC.

■ Peripheral Interrupt Request Batch Read Function

The interrupt request batch read register allows the interrupt request signals from the peripheral resources aggregated into a single interrupt request signal to be read out at once. Reading this register makes it possible to check which interrupt request has occurred. However, the interrupt request flags cannot be cleared by using this function. Clear the interrupt request flags using the registers of each peripheral function.

■ DMA transfer request output select function

DMA transfer can be activated using interrupt request from some peripheral functions. By the DRQSEL0/DRQSEL1 register, select to output interrupt request signal from each peripheral resource to the CPU as the interrupt request signal or to output it to DMAC as a transfer request signal. Also, for TYPE2 products, select the transfer request signal to connect to the DMAC by DQESEL register. For the DMA transfer request signal, see the chapter "DMAC".

2. Configuration

This section shows the configuration of the relationship between the interrupt controller and DMA transfer requests.

■ Block Diagram of Interrupt Controller and DMA Transfer Request

Figure 2-1 Block Diagram of Interrupt Controller and DMA Transfer Request

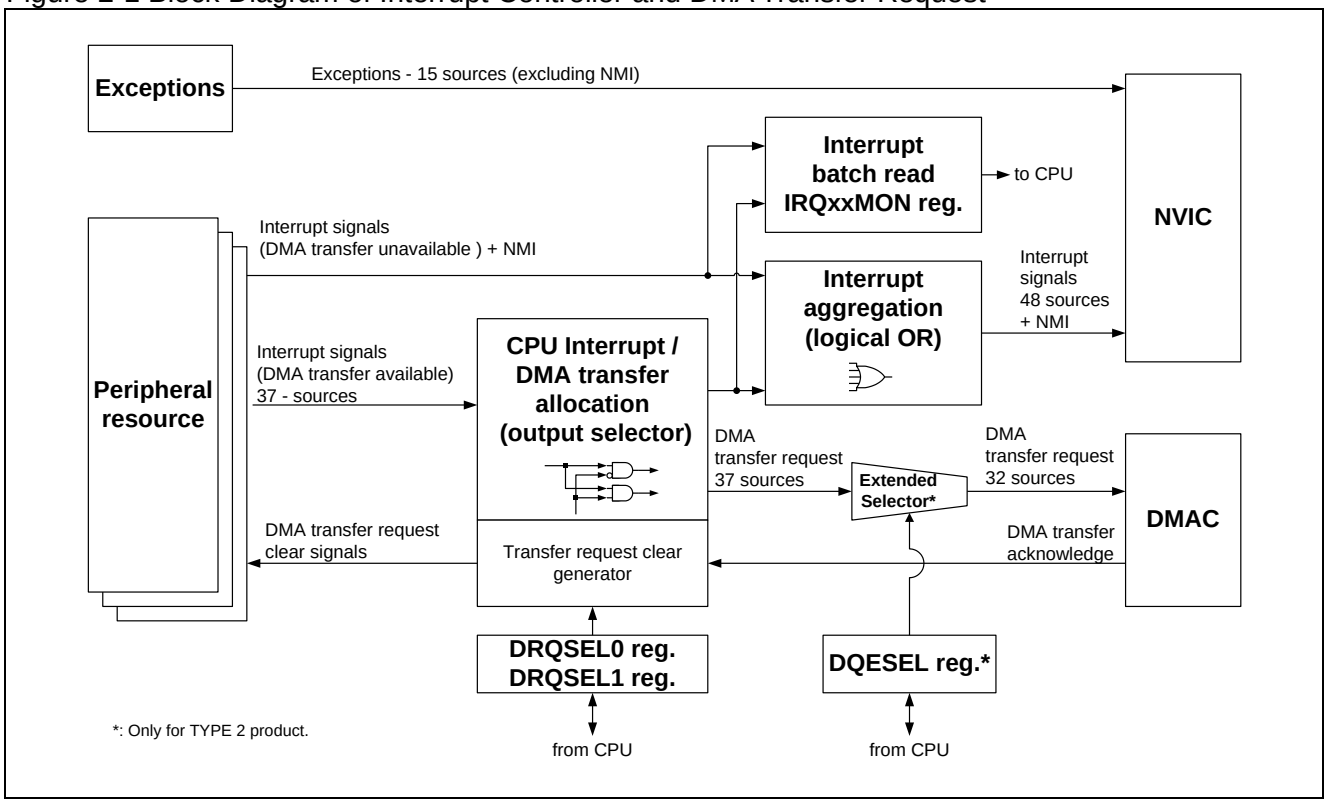

- **Interrupt factor aggregation block**

  Aggregate (logical OR) interrupt request signals from each peripheral resource to 48 factors and output them to NVIC.

- **Peripheral interrupt request batch read register block**

  For interrupt request signals from a peripheral resource aggregated to one interrupt request signal, this register can check what interrupt request of each peripheral resource signal generates such interrupt.

- **CPU interrupt request/DMA transfer request allocation block**

  This is the output selector that selects whether to output interrupt request signal from a peripheral resource to the CPU as an interrupt request signal or to DMAC as a transfer request signal by using the DRQSEL0 / DREQSEL1 register setting.

- **Extended selector block**

  Extended selector exists only in TYPE2 products. Using the DQESEL register setting, select transfer request signal to connect to DMAC. Extended selectors exist in the DMA transfer request signal numbers [10], [11], [24], [25], [26], [27], [30], and [31]. Extended selectors do not exist in other DMA transfer request signals.

3. Exception and Interrupt Factor Vectors

This section shows a vector table of the exceptions and interrupts input to the NVIC.

Table 3-1 Exception and interrupt factor vectors

Vector No.	IRQ No.	Exception and Interrupt Factor	Vector Offset
0	-	Stack pointer initial value	0x00
1	-	Reset	0x04
2	-	Non-Maskable Interrupt (NMI) / Hardware Watchdog Timer	0x08
3	-	Hard Fault	0x0C
4	-	Memory Management	0x10
5	-	Bus Fault	0x14
6	-	Usage Fault	0x18
7-10	-	Reserved	0x1C - 0x2B
11	-	SVCall (Supervisor Call)	0x2C
12	-	Debug Monitor	0x30
13	-	Reserved	0x34
14	-	PendSV	0x38
15	-	SysTick	0x3C
16	0	Anomalous Frequency Detection by Clock Supervisor (FCS)	0x40
17	1	Software Watchdog Timer	0x44
18	2	Low Voltage Detector (LVD)	0x48
19	3	MFT unit0, unit1, unit2 Wave Form Generator / DTIF(Motor Emergency Stop)	0x4C
20	4	External Pin Interrupt Request ch.0 to ch.7	0x50
21	5	External Pin Interrupt Request ch.8 to ch.31	0x54
22	6	Dual Timer / Quad Counter (QPRC) ch.0, ch.1, ch.2	0x58
23	7	Reception Interrupt Request of MFS ch.0 / Reception Interrupt Request of MFS ch.8	0x5C
24	8	Transmission Interrupt Request and Status Interrupt Request of MFS ch.0 / Transmission Interrupt Request and Status Interrupt Request of MFS ch.8	0x60
25	9	Reception Interrupt Request of MFS ch.1 / Reception Interrupt Request of MFS ch.9	0x64
26	10	Transmission Interrupt Request and Status Interrupt Request of MFS ch.1 / Transmission Interrupt Request and Status Interrupt Request of MFS ch.9	0x68
27	11	Reception Interrupt Request of MFS ch.2 / Reception Interrupt Request of MFS ch.10	0x6C
28	12	Transmission Interrupt Request and Status Interrupt Request of MFS ch.2 / Transmission Interrupt Request and Status Interrupt Request of MFS ch.10	0x70
29	13	Reception Interrupt Request of MFS ch.3 / Reception Interrupt Request of MFS ch.11	0x74
30	14	Transmission Interrupt Request and Status Interrupt Request of MFS ch.3 / Transmission Interrupt Request and Status Interrupt Request of MFS ch.11	0x78
31	15	Reception Interrupt Request of MFS ch.4 / Reception Interrupt Request of MFS	0x7C

Vector No.	IRQ No.	Exception and Interrupt Factor	Vector Offset
		ch.12	
32	16	Transmission Interrupt Request and Status Interrupt Request of MFS ch.4 / Transmission Interrupt Request and Status Interrupt Request of MFS ch.12	0x80
33	17	Reception Interrupt Request of MFS ch.5 / Reception Interrupt Request of MFS ch.13	0x84
34	18	Transmission Interrupt Request and Status Interrupt Request of MFS ch.5 / Transmission Interrupt Request and Status Interrupt Request of MFS ch.13	0x88
35	19	Reception Interrupt Request of MFS ch.6 / Reception Interrupt Request of MFS ch.14	0x8C
36	20	Transmission Interrupt Request and Status Interrupt Request of MFS ch.6 / Transmission Interrupt Request and Status Interrupt Request of MFS ch.14	0x90
37	21	Reception Interrupt Request of MFS ch.7 / Reception Interrupt Request of MFS ch.15	0x94
38	22	Transmission Interrupt Request and Status Interrupt Request of MFS ch.7 / Transmission Interrupt Request and Status Interrupt Request of MFS ch.15	0x98
39	23	PPG ch.0/2/4/8/10/12/16/18/20	0x9C
40	24	External Main OSC / External Sub OSC / Main PLL / PLL for USB/ Watch Counter/Real Time Counter	0xA0
41	25	A/D Converter unit0	0xA4
42	26	A/D Converter unit1	0xA8
43	27	A/D Converter unit2 / LCD Controller	0xAC
44	28	MFT unit0, unit1, unit2 Free-run Timer 0 to 2	0xB0
45	29	MFT unit0, unit1, unit2 Input Capture 0 to 3	0xB4
46	30	MFT unit0, unit1, unit2 Output Compare 0 to 5	0xB8
47	31	Base Timer ch.0 to ch.7	0xBC
48	32	CAN ch.0 / Ethernet ch.0	0xC0
49	33	CAN ch.1 / Ethernet ch.1	0xC4
50	34	USB ch.0 Device (DRQ of End Point 1 to 5) *	0xC8
51	35	USB ch.0 Device (DRQI of End Point 0, DRQO and each status) / USB ch.0 HOST (each status) *	0xCC
52	36	USB ch.1 Device (DRQ of End Point 1 to 5) */HDMI-CEC, Remote Control Reception ch.0	0xD0
53	37	USB ch.1 Device (DRQI of End Point 0, DRQO and each status) / USB ch.1 HOST (each status) * / HDMI-CEC, Remote Control Reception ch.1	0xD4
54	38	DMA Controller (DMAC) ch.0	0xD8
55	39	DMA Controller (DMAC) ch.1	0xDC
56	40	DMA Controller (DMAC) ch.2	0xE0
57	41	DMA Controller (DMAC) ch.3	0xE4
58	42	DMA Controller (DMAC) ch.4	0xE8
59	43	DMA Controller (DMAC) ch.5	0xEC
60	44	DMA Controller (DMAC) ch.6	0xF0

Vector No.	IRQ No.	Exception and Interrupt Factor	Vector Offset
61	45	DMA Controller (DMAC) ch.7	0xF4
62	46	Base Timer ch.8 to ch.15	0xF8
63	47	FLASH RDY, HANG Interrupt	0xFC

*: USB Interrupt Factor

Vector No.	IRQ No.	USB Interrupt Factor	Flags
50	34	USB ch.0 Device (DRQ of End Point 1 to 5)	DRQ (End Point 1 to 5)
51	35	USB ch.0 Device (DRQI of End Point 0, DRQO and each status)	DRQI, DRQO, SPK, SUSP, SOF, BRST, CONF, WKUP
		USB ch.0 HOST (each status)	DIRQ, URIRQ, RWKIRQ, CNNIRQ, SOFIRQ, CMPIRQ
52	36	USB ch.1 Device (DRQ of End Point 1 to 5)	DRQ (End Point 1 to 5)
53	37	USB ch.1 Device (DRQI of End Point 0, DRQO and each status)	DRQI, DRQO, SPK, SUSP, SOF, BRST, CONF, WKUP
		USB ch.1 HOST (each status)	DIRQ, URIRQ, RWKIRQ, CNNIRQ, SOFIRQ, CMPIRQ

The priorities of the exceptions for vectors No. 4 to No.15 can be configured using the System Handler Priority Registers (address 0xE000ED18, 0xE000ED1C, 0xE000ED20) built into the NVIC. The priorities of the peripheral interrupts for vectors No. 16 and after can be configured using the IRQ Priority Registers (address 0xE000E400 to 0xE000E42C) built into the NVIC.

The sources of the interrupts for vectors No. 2 and No. 16 to No. 63 can be checked using the batch read register. See "Chapter 8: Nested Vectored Interrupt Controller" in the "Cortex-M3 Technical Reference Manual" for details on the other exceptions and interrupts.

Furthermore, for the interrupts of vectors No. 2 and No. 16 to No. 63, the sources that are batch read may be a signal that multiple interrupt factors are logical OR’ed within each of the peripheral macros. See the descriptions of each of the peripheral resource interrupts for details.

4. Registers

This section explains the DMA transfer request selection register and the interrupt request batch read register.

■ DMA transfer request selection register and interrupt request batch read register list

Abbreviation	Register Name	Reference
DRQSEL	DMA Request Selection Register	4.1
DRQSEL1*[1]	DMA Request Selection Register 1	4.2
DQESEL*[1]	DMA Request Extended Selection Register	4.3
EXC02MON	EXC02 Batch Read Register	4.4
IRQ00MON	IRQ00 Batch Read Register	4.5
IRQ01MON	IRQ01 Batch Read Register	4.6
IRQ02MON	IRQ02 Batch Read Register	4.7
IRQ03MON	IRQ03 Batch Read Register	4.8
IRQ04MON	IRQ04 Batch Read Register	4.9
IRQ05MON	IRQ05 Batch Read Register	4.10
IRQ06MON	IRQ06 Batch Read Register	4.11
IRQ07MON	IRQ07 Batch Read Register	4.12
IRQ08MON	IRQ08 Batch Read Register	4.13
IRQ09MON	IRQ09 Batch Read Register	4.12
IRQ10MON	IRQ10 Batch Read Register	4.13
IRQ11MON	IRQ11 Batch Read Register	4.12
IRQ12MON	IRQ12 Batch Read Register	4.13
IRQ13MON	IRQ13 Batch Read Register	4.12
IRQ14MON	IRQ14 Batch Read Register	4.13
IRQ15MON	IRQ15 Batch Read Register	4.12
IRQ16MON	IRQ16 Batch Read Register	4.13
IRQ17MON	IRQ17 Batch Read Register	4.12
IRQ18MON	IRQ18 Batch Read Register	4.13
IRQ19MON	IRQ19 Batch Read Register	4.12
IRQ20MON	IRQ20 Batch Read Register	4.13
IRQ21MON	IRQ21 Batch Read Register	4.12
IRQ22MON	IRQ22 Batch Read Register	4.13
IRQ23MON	IRQ23 Batch Read Register	4.14
IRQ24MON	IRQ24 Batch Read Register	4.15

Abbreviation	Register Name	Reference
IRQ25MON	IRQ25 Batch Read Register	4.16
IRQ26MON	IRQ26 Batch Read Register	
IRQ27MON	IRQ27 Batch Read Register	4.17
IRQ28MON	IRQ28 Batch Read Register	4.18
IRQ29MON	IRQ29 Batch Read Register	4.19
IRQ30MON	IRQ30 Batch Read Register	4.20
IRQ31MON	IRQ31 Batch Read Register	4.21
IRQ32MON	IRQ32 Batch Read Register	4.22
IRQ33MON	IRQ33 Batch Read Register	4.23
IRQ34MON	IRQ34 Batch Read Register	4.24
IRQ35MON	IRQ35 Batch Read Register	4.25
IRQ36MON	IRQ36 Batch Read Register	4.26
IRQ37MON	IRQ37 Batch Read Register	4.27
IRQ38MON	IRQ38 Batch Read Register	4.28
IRQ39MON	IRQ39 Batch Read Register	
IRQ40MON	IRQ40 Batch Read Register	
IRQ41MON	IRQ41 Batch Read Register	
IRQ42MON	IRQ42 Batch Read Register	
IRQ43MON	IRQ43 Batch Read Register	
IRQ44MON	IRQ44 Batch Read Register	
IRQ45MON	IRQ45 Batch Read Register	
IRQ46MON	IRQ46 Batch Read Register	4.29
IRQ47MON	IRQ47 Batch Read Register	4.30
ODDPKS*2	USB ch.0 Odd Packet Size DMA Enable Register	4.31
ODDPKS1*1	USB ch.1 Odd Packet Size DMA Enable Register	4.32

*1: Available only with TYPE2 products (This register is not available with products other than TYPE2 products.)
*2: This register is not available with TYPE0 products.

See "Chapter 8: Nested Vectored Interrupt Controller" in the "Cortex-M3 Technical Reference Manual" for details on the registers in the NVIC.

4.1. DMA Request Selection Register (DRQSEL)

The DMA Request Selection Register (DRQSEL) selects whether interrupt signals that can start DMA transfers are output as interrupt requests to the CPU or output as transfer requests to the DMAC.

bit	31	0
Field	DRQSEL [31:0]	
Attribute	R/W	
Initial value	0x00000000	

[bit31:0] DRQSEL :

bit No.	Value	Description
31	0	The interrupt signal of the external interrupt ch.3 is output as an interrupt request to the CPU.
	1	The interrupt signal of the external interrupt ch.3 is output as a transfer request to the DMAC (including extension).
30	0	The interrupt signal of the external interrupt ch.2 is output as an interrupt request to the CPU.
	1	The interrupt signal of the external interrupt ch.2 is output as a transfer request to the DMAC (including extension).
29	0	The interrupt signal of the external interrupt ch.1 is output as an interrupt request to the CPU.
	1	The interrupt signal of the external interrupt ch.1 is output as a transfer request to the DMAC.
28	0	The interrupt signal of the external interrupt ch.0 is output as an interrupt request to the CPU.
	1	The interrupt signal of the external interrupt ch.0 is output as a transfer request to the DMAC.
27	0	The transmission interrupt signal of the MFS ch.7 is output as an interrupt request to the CPU.
	1	The transmission interrupt signal of the MFS ch.7 is output as a transfer request to the DMAC (including extension).
26	0	The reception interrupt signal of the MFS ch.7 is output as an interrupt request to the CPU.
	1	The reception interrupt signal of the MFS ch.7 is output as a transfer request to the DMAC (including extension).
25	0	The transmission interrupt signal of the MFS ch.6 is output as an interrupt request to the CPU.
	1	The transmission interrupt signal of the MFS ch.6 is output as a transfer request to the DMAC (including extension).
24	0	The reception interrupt signal of the MFS ch.6 is output as an interrupt request to the CPU.
	1	The reception interrupt signal of the MFS ch.6 is output as a transfer request to the DMAC (including extension).

bit No.	Value	Description
23	0	The transmission interrupt signal of the MFS ch.5 is output as an interrupt request to the CPU.
	1	The transmission interrupt signal of the MFS ch.5 is output as a transfer request to the DMAC.
22	0	The reception interrupt signal of the MFS ch.5 is output as an interrupt request to the CPU.
	1	The reception interrupt signal of the MFS ch.5 is output as a transfer request to the DMAC.
21	0	The transmission interrupt signal of the MFS ch.4 is output as an interrupt request to the CPU.
	1	The transmission interrupt signal of the MFS ch.4 is output as a transfer request to the DMAC.
20	0	The reception interrupt signal of the MFS ch.4 is output as an interrupt request to the CPU.
	1	The reception interrupt signal of the MFS ch.4 is output as a transfer request to the DMAC.
19	0	The transmission interrupt signal of the MFS ch.3 is output as an interrupt request to the CPU.
	1	The transmission interrupt signal of the MFS ch.3 is output as a transfer request to the DMAC.
18	0	The reception interrupt signal of the MFS ch.3 is output as an interrupt request to the CPU.
	1	The reception interrupt signal of the MFS ch.3 is output as a transfer request to the DMAC.
17	0	The transmission interrupt signal of the MFS ch.2 is output as an interrupt request to the CPU.
	1	The transmission interrupt signal of the MFS ch.2 is output as a transfer request to the DMAC.
16	0	The reception interrupt signal of the MFS ch.2 is output as an interrupt request to the CPU.
	1	The reception interrupt signal of the MFS ch.2 is output as a transfer request to the DMAC.
15	0	The transmission interrupt signal of the MFS ch.1 is output as an interrupt request to the CPU.
	1	The transmission interrupt signal of the MFS ch.1 is output as a transfer request to the DMAC.
14	0	The reception interrupt signal of the MFS ch.1 is output as an interrupt request to the CPU.
	1	The reception interrupt signal of the MFS ch.1 is output as a transfer request to the DMAC.
13	0	The transmission interrupt signal of the MFS ch.0 is output as an interrupt request to the CPU.
	1	The transmission interrupt signal of the MFS ch.0 is output as a transfer request to the DMAC.
12	0	The reception interrupt signal of the MFS ch.0 is output as an interrupt request to the CPU.
	1	The reception interrupt signal of the MFS ch.0 is output as a transfer request to the DMAC.

bit No.	Value	Description
11	0	The IRQ0 interrupt signal of the base timer ch.6 is output as an interrupt request to the CPU.
	1	The IRQ0 interrupt signal of the base timer ch.6 is output as a transfer request to the DMAC (including extension).
10	0	The IRQ0 interrupt signal of the base timer ch.4 is output as an interrupt request to the CPU.
	1	The IRQ0 interrupt signal of the base timer ch.4 is output as a transfer request to the DMAC (including extension).
9	0	The IRQ0 interrupt signal of the base timer ch.2 is output as an interrupt request to the CPU.
	1	The IRQ0 interrupt signal of the base timer ch.2 is output as a transfer request to the DMAC.
8	0	The IRQ0 interrupt signal of the base timer ch.0 is output as an interrupt request to the CPU.
	1	The IRQ0 interrupt signal of the base timer ch.0 is output as a transfer request to the DMAC.
7	0	The scan conversion interrupt signal of the A/D converter unit 2 is output as an interrupt request to the CPU.
	1	The scan conversion interrupt signal of the A/D converter unit 2 is output as a transfer request to the DMAC.
6	0	The scan conversion interrupt signal of the A/D converter unit 1 is output as an interrupt request to the CPU.
	1	The scan conversion interrupt signal of the A/D converter unit 1 is output as a transfer request to the DMAC.
5	0	The scan conversion interrupt signal of the A/D converter unit 0 is output as an interrupt request to the CPU.
	1	The scan conversion interrupt signal of the A/D converter unit 0 is output as a transfer request to the DMAC.
4	0	The EP5 DRQ interrupt signal of the USB ch.0 is output as an interrupt request to the CPU.
	1	The EP5 DRQ interrupt signal of the USB ch.0 is output as a transfer request to the DMAC.
3	0	The EP4 DRQ interrupt signal of the USB ch.0 is output as an interrupt request to the CPU.
	1	The EP4 DRQ interrupt signal of the USB ch.0 is output as a transfer request to the DMAC.
2	0	The EP3 DRQ interrupt signal of the USB ch.0 is output as an interrupt request to the CPU.
	1	The EP3 DRQ interrupt signal of the USB ch.0 is output as a transfer request to the DMAC.
1	0	The EP2 DRQ interrupt signal of the USB ch.0 is output as an interrupt request to the CPU.
	1	The EP2 DRQ interrupt signal of the USB ch.0 is output as a transfer request to the DMAC.
0	0	The EP1 DRQ interrupt signal of the USB ch.0 is output as an interrupt request to the CPU.
	1	The EP1 DRQ interrupt signal of the USB ch.0 is output as a transfer request to the DMAC.

MFS: Multifunction serial interface

Description of "(including extension)" in the table means the following.

For TYPE2 products, DMA transfer request signals (number [10], [11], [24], [25], [26], [27], [30], and [31]) are not connected directly to DMAC but through an extended selector. By executing a select setting of the extended selector, other interrupt request signals selected by the DRQSEL1 register can be connected as DMA transfer request signals.

For products other than TYPE2, the extended selector does not exist.

<Notes>

- If interrupt signal is selected as a transfer request to DMAC, the read bit value of the appropriate interrupt request batch read register (IRQxxMON, xx = 00 to 47) becomes “0” regardless of the interrupt occurrence.
- When changing the DRQSEL0 settings, clear the interrupt request signals from appropriate peripherals before making the change.
- DMA transfers cannot be started from hardware for interrupt signals not specified in the DRQSEL/DRQSEL1 settings.

4.2. DMA Request Select Register 1 (DRQSEL1)

DMA request select register 1 (DRQSEL1) selects whether to output interrupt signals that can be transferred to DMA as an interrupt request to the CPU or to output them as a transfer request to DMAC. This register exists only in TYPE2 products.

bit	31	5	4	0
Field	Reserved		DRQSEL1[4:0]	
Attribute	R		R/W	
Initial value	00000000000000000000000000		00000	

[bit31:5] Reserved: Reserved bits
Always write "0" when writing.
"0" is read when reading.

[bit4:0] DRQSEL1 :

bit No.	Value	Description
4	0	Interrupt signal of EP5 DRQ of USB ch.1 is output to interrupt request to CPU
	1	Interrupt signal of EP5 DRQ of USB ch.1 is output to transfer request to DMAC through extended selector
3	0	Interrupt signal of EP4 DRQ of USB ch.1 is output to interrupt request to CPU
	1	Interrupt signal of EP4 DRQ of USB ch.1 is output to transfer request to DMAC through extended selector
2	0	Interrupt signal of EP3 DRQ of USB ch.1 is output to interrupt request to CPU
	1	Interrupt signal of EP3 DRQ of USB ch.1 is output to transfer request to DMAC through extended selector
1	0	Interrupt signal of EP2 DRQ of USB ch.1 is output to interrupt request to CPU
	1	Interrupt signal of EP2 DRQ of USB ch.1 is output to transfer request to DMAC through extended selector
0	0	Interrupt signal of EP1 DRQ of USB ch.1 is output to interrupt request to CPU
	1	Interrupt signal of EP1 DRQ of USB ch.1 is output to transfer request to DMAC through extended selector

<Notes>

- If interrupt signal is selected as a transfer request to DMAC, the read bit value of the appropriate interrupt request batch read register (IRQxxMON, xx = 00 to 47) becomes "0" regardless of interrupt occurrence.
- When changing the DRQSEL1 setting, change it after clearing interrupt request signals from the appropriate peripheral.
- Interrupt signals that are not described in the DRQSEL/DRQSEL1 setting cannot activate a DMA transfer by hardware. For details on the DMA transfer mode, see the chapter on "DMAC".
- The signals selected to output a transfer request to DMAC in this register are connected to DMAC by selecting the extended selector.

4.3. DMA Request Extended Selection Register (DQESEL)

The DMA request extended selection register (DQESEL) sets the extended selector that selects the input source of the DMA transfer request signals ([10], [11], [24], [25], [26], [27], [30], and [31] of IREQ [31:0]). This register exists only in TYPE2 products.

bit	31 28	27 24	23 20	19 16
Field	ESEL31	ESEL30	ESEL27	ESEL26
Attribute	R/W	R/W	R/W	R/W
Initial value	0000	0000	0000	0000

bit	15 12	11 8	7 4	3 0
Field	ESEL25	ESEL24	ESEL11	ESEL10
Attribute	R/W	R/W	R/W	R/W
Initial value	0000	0000	0000	0000

[bit31:28] ESEL31 :

bit31:28	Description
When reading	Read the register-setting value.
When writing "0000"	Connect external interrupt ch.3 to IDREQ [31].
When writing "0001"	Connect USB ch.1 EP1 to IDREQ [31].
When writing "0010"	Connect USB ch.1 EP2 to IDREQ [31].
When writing "0011"	Connect USB ch.1 EP3 to IDREQ [31].
When writing "0100"	Connect USB ch.1 EP4 to IDREQ [31].
When writing "0101"	Connect USB ch.1 EP5 to IDREQ [31].
Other than the above	Setting is prohibited

[bit27:24] ESEL30 :

bit27:24	Description
When reading	Read the register-setting value.
When writing "0000"	Connect external interrupt ch.2 to IDREQ [30].
When writing "0001"	Connect USB ch.1 EP1 to IDREQ [30].
When writing "0010"	Connect USB ch.1 EP2 to IDREQ [30].
When writing "0011"	Connect USB ch.1 EP3 to IDREQ [30].
When writing "0100"	Connect USB ch.1 EP4 to IDREQ [30].
When writing "0101"	Connect USB ch.1 EP5 to IDREQ [30].
Other than the above	Setting is prohibited

[bit23:20] ESEL27 :

bit23:20	Description
When reading	Read the register-setting value.
When writing "0000"	Connect MFS ch.7 transmission interrupt to IDREQ [27].
When writing "0001"	Connect USB ch.1 EP1 to IDREQ [27].
When writing "0010"	Connect USB ch.1 EP2 to IDREQ [27].
When writing "0011"	Connect USB ch.1 EP3 to IDREQ [27].
When writing "0100"	Connect USB ch.1 EP4 to IDREQ [27].
When writing "0101"	Connect USB ch.1 EP5 to IDREQ [27].
Other than the above	Setting is prohibited

[bit19:16] ESEL26 :

bit19:16	Description
When reading	Read the register-setting value.
When writing "0000"	Connect MFS ch.7 receive interrupt to IDREQ [26].
When writing "0001"	Connect USB ch.1 EP1 to IDREQ [26].
When writing "0010"	Connect USB ch.1 EP2 to IDREQ [26].
When writing "0011"	Connect USB ch.1 EP3 to IDREQ [26].
When writing "0100"	Connect USB ch.1 EP4 to IDREQ [26].
When writing "0101"	Connect USB ch.1 EP5 to IDREQ [26].
Other than the above	Setting is prohibited

[bit15:12] ESEL25 :

bit15:12	Description
When reading	Read the register-setting value.
When writing "0000"	Connect MFS ch.6 transmission interrupt to IDREQ [25].
When writing "0001"	Connect USB ch.1 EP1 to IDREQ [25].
When writing "0010"	Connect USB ch.1 EP2 to IDREQ [25].
When writing "0011"	Connect USB ch.1 EP3 to IDREQ [25].
When writing "0100"	Connect USB ch.1 EP4 to IDREQ [25].
When writing "0101"	Connect USB ch.1 EP5 to IDREQ [25].
Other than the above	Setting is prohibited

[bit11:8] ESEL24 :

bit11:8	Description
When reading	Read the register-setting value.
When writing "0000"	Connect MFS ch.6 receive interrupt to IDREQ [24].
When writing "0001"	Connect USB ch.1 EP1 to IDREQ [24].
When writing "0010"	Connect USB ch.1 EP2 to IDREQ [24].
When writing "0011"	Connect USB ch.1 EP3 to IDREQ [24].
When writing "0100"	Connect USB ch.1 EP4 to IDREQ [24].
When writing "0101"	Connect USB ch.1 EP5 to IDREQ [24].
Other than the above	Setting is prohibited

[bit7:4] ESEL11 :

bit7:4	Description
When reading	Read the register-setting value.
When writing "0000"	Connect base timer ch.6 IRQ0 interrupt to IDREQ [11].
When writing "0001"	Connect USB ch.1 EP1 to IDREQ [11].
When writing "0010"	Connect USB ch.1 EP2 to IDREQ [11].
When writing "0011"	Connect USB ch.1 EP3 to IDREQ [11].
When writing "0100"	Connect USB ch.1 EP4 to IDREQ [11].
When writing "0101"	Connect USB ch.1 EP5 to IDREQ [11].
Other than the above	Setting is prohibited

[bit3:0] ESEL10 :

bit3:0	Description
When reading	Read the register-setting value.
When writing "0000"	Connect base timer ch.4 IRQ0 interrupt to IDREQ [10].
When writing "0001"	Connect USB ch.1 EP1 to IDREQ [10].
When writing "0010"	Connect USB ch.1 EP2 to IDREQ [10].
When writing "0011"	Connect USB ch.1 EP3 to IDREQ [10].
When writing "0100"	Connect USB ch.1 EP4 to IDREQ [10].
When writing "0101"	Connect USB ch.1 EP5 to IDREQ [10].
Other than the above	Setting is prohibited

<Notes>

- The Extended selector is enabled only when the interrupt signal from the macro is set as the DMA transfer request signal in the DRQSEL1 register setting.
- Depending on the setting values of DRQSEL, DRQSEL1, and DQESEL, interrupt signals are connected to neither CPU nor DMAC. Do not execute such a setting.

4.4. EXC02 Batch Read Register (EXC02MON)

EXC02MON can batch-read the interrupt requests allocated to interrupt factor vector No. 2.

bit	31															16
Field	Reserved															
Attribute	R															
Initial value	0x0000															

bit	15	14	13	12	11	10	9	8	7	6	5	4	3	2	1	0
Field	Reserved														HWINT	NMI
Attribute	R														R	R
Initial value	00000000000000														0	0

[bit31:2] Reserved: Reserved bits

Reads out "0".

[bit1] HWINT:

Value	Description
0	No hardware watchdog timer interrupt request
1	Hardware watchdog timer interrupt request

[bit0] NMI:

Value	Description
0	No external NMIX pin interrupt request
1	External NMIX pin interrupt request

4.5. IRQ00 Batch Read Register (IRQ00MON)

IRQ00MON can batch-read the interrupt requests allocated to interrupt factor vector No. 16.

bit	31															16
Field	Reserved															
Attribute	R															
Initial value	0x0000															

bit	15	14	13	12	11	10	9	8	7	6	5	4	3	2	1	0
Field	Reserved															FCSINT
Attribute	R															R
Initial value	000000000000000															0

[bit31:1] Reserved: Reserved bits

Reads out "0".

[bit0] FCSINT:

Value	Description
0	No anomalous frequency detection by CSV interrupt request
1	Anomalous frequency detection by CSV interrupt request

4.6. IRQ01 Batch Read Register (IRQ01MON)

IRQ01MON can batch-read the interrupt requests allocated to interrupt factor vector No. 17.

bit	31															16
Field	Reserved															
Attribute	R															
Initial value	0x0000															

bit	15	14	13	12	11	10	9	8	7	6	5	4	3	2	1	0
Field	Reserved															SWWDTINT
Attribute	R															R
Initial value	000000000000000															0

[bit31:1] Reserved: Reserved bits

Reads out "0".

[bit0] SWWDTINT:

Value	Description
0	No software watchdog timer interrupt request
1	Software watchdog timer interrupt request

4.7. IRQ02 Batch Read Register (IRQ02MON)

IRQ02MON can batch-read the interrupt requests allocated to interrupt factor vector No. 18.

bit	31															16
Field	Reserved															
Attribute	R															
Initial value	0x0000															

bit	15	14	13	12	11	10	9	8	7	6	5	4	3	2	1	0
Field	Reserved															LVDINT
Attribute	R															R
Initial value	000000000000000															0

[bit31:1] Reserved: Reserved bits

Reads out "0".

[bit0] LVDINT:

Value	Description
0	No low voltage detection (LVD) interrupt request
1	Low voltage detection (LVD) interrupt request

4.8. IRQ03 Batch Read Register (IRQ03MON)

IRQ03MON can batch-read the interrupt requests allocated to interrupt factor vector No. 19.

bit	31															16
Field	Reserved															
Attribute	R															
Initial value	0x0000															

bit	15	14	13	12	11	10	9	8	7	6	5	4	3	2	1	0
Field	Reserved				WAVE2INT				WAVE1INT				WAVE0INT			
Attribute	R				R				R				R			
Initial value	0000				0000				0000				0000			

[bit31:12] Reserved: Reserved bits

Reads out "0".

[bit11:8] WAVE2INT:

bit No.	Value	Description
11	0	No WFG timer 54 interrupt request in MFT unit 2
	1	WFG timer 54 interrupt request in MFT unit 2
10	0	No WFG timer 32 interrupt request in MFT unit 2
	1	WFG timer 32 interrupt request in MFT unit 2
9	0	No WFG timer 10 interrupt request in MFT unit 2
	1	WFG timer 10 interrupt request in MFT unit 2
8	0	No DTIF (motor emergency stop) interrupt request in MFT unit 2
	1	DTIF (motor emergency stop) interrupt request in MFT unit 2

[bit7:4] WAVE1INT:

bit No.	Value	Description
7	0	No WFG timer 54 interrupt request in MFT unit 1
	1	WFG timer 54 interrupt request in MFT unit 1
6	0	No WFG timer 32 interrupt request in MFT unit 1
	1	WFG timer 32 interrupt request in MFT unit 1
5	0	No WFG timer 10 interrupt request in MFT unit 1
	1	WFG timer 10 interrupt request in MFT unit 1
4	0	No DTIF (motor emergency stop) interrupt request in MFT unit 1
	1	DTIF (motor emergency stop) interrupt request in MFT unit 1

[bit3:0] WAVE0INT:

bit No.	Value	Description
3	0	No WFG timer 54 interrupt request in MFT unit 0
	1	WFG timer 54 interrupt request in MFT unit 0
2	0	No WFG timer 32 interrupt request in MFT unit 0
	1	WFG timer 32 interrupt request in MFT unit 0
1	0	No WFG timer 10 interrupt request in MFT unit 0
	1	WFG timer 10 interrupt request in MFT unit 0
0	0	No DTIF (motor emergency stop) interrupt request in MFT unit 0
	1	DTIF (motor emergency stop) interrupt request in MFT unit 0

4.9. IRQ04 Batch Read Register (IRQ04MON)

IRQ04MON can batch-read the interrupt requests allocated to interrupt factor vector No. 20.

IRQ04MON shows the status of the interrupt requests on the external interrupt from ch.0 to ch.7.

bit	31															16
Field	Reserved															
Attribute	R															
Initial value	0x0000															

bit	15	14	13	12	11	10	9	8	7	6	5	4	3	2	1	0
Field	Reserved								EXTINT							
Attribute	R								R							
Initial value	0x00								0x00							

[bit31:8] Reserved: Reserved bits

Reads out "0".

[bit7:0] EXTINT:

bit No.	Value	Description
7	0	No interrupt request on external interrupt ch.7
	1	Interrupt request on external interrupt ch.7
6	0	No interrupt request on external interrupt ch.6
	1	Interrupt request on external interrupt ch.6
5	0	No interrupt request on external interrupt ch.5
	1	Interrupt request on external interrupt ch.5
4	0	No interrupt request on external interrupt ch.4
	1	Interrupt request on external interrupt ch.4
3	0	No interrupt request on external interrupt ch.3
	1	Interrupt request on external interrupt ch.3
2	0	No interrupt request on external interrupt ch.2
	1	Interrupt request on external interrupt ch.2
1	0	No interrupt request on external interrupt ch.1
	1	Interrupt request on external interrupt ch.1
0	0	No interrupt request on external interrupt ch.0
	1	Interrupt request on external interrupt ch.0

If DMA transfer requests are selected by the DRQSEL register, the corresponding EXTINT bit is "0".

4.10. IRQ05 Batch Read Register (IRQ05MON)

IRQ05MON can batch-read the interrupt requests allocated to interrupt factor vector No. 21.

IRQ05MON shows the status of the interrupt requests on the external interrupt from ch.8 to ch.31.

bit	31	30	29	28	27	26	25	24	23	22	21	20	19	18	17	16
Field	Reserved								EXTINT							
Attribute	R								R							
Initial value	0x00								0x00							

bit	15	14	13	12	11	10	9	8	7	6	5	4	3	2	1	0
Field	EXTINT															
Attribute	R															
Initial value	0x0000															

[bit31:24] Reserved: Reserved bits

Reads out "0".

[bit23:0] EXTINT:

bit No.	Value	Description
23	0	No interrupt request on external interrupt ch.31
	1	Interrupt request on external interrupt ch.31
22	0	No interrupt request on external interrupt ch.30
	1	Interrupt request on external interrupt ch.30
21	0	No interrupt request on external interrupt ch.29
	1	Interrupt request on external interrupt ch.29
20	0	No interrupt request on external interrupt ch.28
	1	Interrupt request on external interrupt ch.28
19	0	No interrupt request on external interrupt ch.27
	1	Interrupt request on external interrupt ch.27
18	0	No interrupt request on external interrupt ch.26
	1	Interrupt request on external interrupt ch.26
17	0	No interrupt request on external interrupt ch.25
	1	Interrupt request on external interrupt ch.25
16	0	No interrupt request on external interrupt ch.24
	1	Interrupt request on external interrupt ch.24
15	0	No interrupt request on external interrupt ch.23
	1	Interrupt request on external interrupt ch.23
14	0	No interrupt request on external interrupt ch.22
	1	Interrupt request on external interrupt ch.22
13	0	No interrupt request on external interrupt ch.21
	1	Interrupt request on external interrupt ch.21

bit No.	Value	Description
12	0	No interrupt request on external interrupt ch.20
	1	Interrupt request on external interrupt ch.20
11	0	No interrupt request on external interrupt ch.19
	1	Interrupt request on external interrupt ch.19
10	0	No interrupt request on external interrupt ch.18
	1	Interrupt request on external interrupt ch.18
9	0	No interrupt request on external interrupt ch.17
	1	Interrupt request on external interrupt ch.17
8	0	No interrupt request on external interrupt ch.16
	1	Interrupt request on external interrupt ch.16
7	0	No interrupt request on external interrupt ch.15
	1	Interrupt request on external interrupt ch.15
6	0	No interrupt request on external interrupt ch.14
	1	Interrupt request on external interrupt ch.14
5	0	No interrupt request on external interrupt ch.13
	1	Interrupt request on external interrupt ch.13
4	0	No interrupt request on external interrupt ch.12
	1	Interrupt request on external interrupt ch.12
3	0	No interrupt request on external interrupt ch.11
	1	Interrupt request on external interrupt ch.11
2	0	No interrupt request on external interrupt ch.10
	1	Interrupt request on external interrupt ch.10
1	0	No interrupt request on external interrupt ch.9
	1	Interrupt request on external interrupt ch.9
0	0	No interrupt request on external interrupt ch.8
	1	Interrupt request on external interrupt ch.8

4.11. IRQ06 Batch Read Register (IRQ06MON)

IRQ06MON can batch-read the interrupt requests allocated to interrupt factor vector No. 22.

bit	31	30	29	28	27	26	25	24	23	22	21	20	19	18	17	16
Field	Reserved												QUD2INT			
Attribute	R												R			
Initial value	0x000												0000			

bit	15	14	13	12	11	10	9	8	7	6	5	4	3	2	1	0
Field	QUD2INT		QUD1INT						QUD0INT						TIMINT	
Attribute	R		R						R						R	
Initial value	00		000000						000000						00	

[bit31:20] Reserved: Reserved bits

Reads out "0".

[bit19:14] QUD2INT:

bit No.	Value	Description
19	0	No PC match & RC match interrupt request on QPRC ch.2
	1	PC match & RC match interrupt request on QPRC ch.2
18	0	No interrupt request detected RC out of range on QPRC ch.2
	1	Interrupt request detected RC out of range on QPRC ch.2
17	0	No PC count invert interrupt request on QPRC ch.2
	1	PC count invert interrupt request on QPRC ch.2
16	0	No overflow/underflow/zero index interrupt request on QPRC ch.2
	1	Overflow/underflow/zero index interrupt request on QPRC ch.2
15	0	No PC&RC match interrupt request on QPRC ch.2
	1	PC&RC match interrupt request on QPRC ch.2
14	0	No PC match interrupt request on QPRC ch.2
	1	PC match interrupt request on QPRC ch.2

[bit13:8] QUD1INT:

bit No.	Value	Description
13	0	No PC match & RC match interrupt request on QPRC ch.1
	1	PC match & RC match interrupt request on QPRC ch.1
12	0	No interrupt request detected RC out of range on QPRC ch.1
	1	Interrupt request detected RC out of range on QPRC ch.1
11	0	No PC count invert interrupt request on QPRC ch.1
	1	PC count invert interrupt request on QPRC ch.1
10	0	No overflow/underflow/zero index interrupt request on QPRC ch.1
	1	Overflow/underflow/zero index interrupt request on QPRC ch.1
9	0	No PC&RC match interrupt request on QPRC ch.1
	1	PC&RC match interrupt request on QPRC ch.1
8	0	No PC match interrupt request on QPRC ch.1
	1	PC match interrupt request on QPRC ch.1

[bit7:2] QUD0INT:

bit No.	Value	Description
7	0	No PC match & RC match interrupt request on QPRC ch.0
	1	PC match & RC match interrupt request on QPRC ch.0
6	0	No interrupt request detected RC out of range on QPRC ch.0
	1	Interrupt request detected RC out of range on QPRC ch.0
5	0	No PC count invert interrupt request on QPRC ch.0
	1	PC count invert interrupt request on QPRC ch.0
4	0	No overflow/underflow/zero index interrupt request on QPRC ch.0
	1	Overflow/underflow/zero index interrupt request on QPRC ch.0
3	0	No PC&RC match interrupt request on QPRC ch.0
	1	PC&RC match interrupt request on QPRC ch.0
2	0	No PC match interrupt request on QPRC ch.0
	1	PC match interrupt request on QPRC ch.0

[bit1:0] TIMINT:

bit No.	Value	Description
1	0	No dual timer TIMINT2 interrupt request
	1	Dual timer TIMINT2 interrupt request
0	0	No dual timer TIMINT1 interrupt request
	1	Dual timer TIMINT1 interrupt request

4.12. IRQ07/09/11/13/15/17/19/21 Batch Read Register (IRQxxMON)

IRQ07MON can batch-read the interrupt requests allocated to interrupt factor vector No. 23.
IRQ09MON can batch-read the interrupt requests allocated to interrupt factor vector No. 25.
IRQ11MON can batch-read the interrupt requests allocated to interrupt factor vector No. 27.
IRQ13MON can batch-read the interrupt requests allocated to interrupt factor vector No. 29.
IRQ15MON can batch-read the interrupt requests allocated to interrupt factor vector No. 31.
IRQ17MON can batch-read the interrupt requests allocated to interrupt factor vector No. 33.
IRQ19MON can batch-read the interrupt requests allocated to interrupt factor vector No. 35.
IRQ21MON can batch-read the interrupt requests allocated to interrupt factor vector No. 37.

IRQ07MON shows the status of the reception interrupt request on MFS ch.0 / ch.8.
IRQ09MON shows the status of the reception interrupt request on MFS ch.1 / ch.9.
IRQ11MON shows the status of the reception interrupt request on MFS ch.2 / ch.10.
IRQ13MON shows the status of the reception interrupt request on MFS ch.3 / ch.11.
IRQ15MON shows the status of the reception interrupt request on MFS ch.4 / ch.12.
IRQ17MON shows the status of the reception interrupt request on MFS ch.5 / ch.13.
IRQ19MON shows the status of the reception interrupt request on MFS ch.6 / ch.14.
IRQ21MON shows the status of the reception interrupt request on MFS ch.7 / ch.15.

bit	31	30	29	28	27	26	25	24	23	22	21	20	19	18	17	16
Field	Reserved															
Attribute	R															
Initial value	0x0000															

bit	15	14	13	12	11	10	9	8	7	6	5	4	3	2	1	0
Field	Reserved														MFSINT	
Attribute	R														R	
Initial value	00000000000000														00	

[bit31:2] Reserved: Reserved bits
Reads out "0".

[bit1:0] MFSINT:

bit No.	Value	Description
1	0	No reception interrupt request on the corresponding MFS channel (ch.15 to ch.8).
	1	Reception interrupt request on the corresponding MFS channel (ch.15 to ch.8).
0	0	No reception interrupt request on the corresponding MFS channel (ch.7 to ch.0).
	1	Reception interrupt request on the corresponding MFS channel (ch.7 to ch.0).

If DMA transfer requests are selected by the DRQSEL register, the MFSINT bit of the corresponding MFS channel (ch.0 to ch.7) is "0".

4.13. IRQ08/10/12/14/16/18/20/22 Batch Read Register (IRQxxMON)

IRQ08MON can batch-read the interrupt requests allocated to interrupt factor vector No. 24.
IRQ10MON can batch-read the interrupt requests allocated to interrupt factor vector No. 26.
IRQ12MON can batch-read the interrupt requests allocated to interrupt factor vector No. 28.
IRQ14MON can batch-read the interrupt requests allocated to interrupt factor vector No. 30.
IRQ16MON can batch-read the interrupt requests allocated to interrupt factor vector No. 32.
IRQ18MON can batch-read the interrupt requests allocated to interrupt factor vector No. 34.
IRQ20MON can batch-read the interrupt requests allocated to interrupt factor vector No. 36.
IRQ22MON can batch-read the interrupt requests allocated to interrupt factor vector No. 38.

IRQ08MON shows the status of the transmission interrupt request and the status interrupt request on MFS ch.0 and ch.8.
IRQ10MON shows the status of the transmission interrupt request and the status interrupt request on MFS ch.1 and ch.9.
IRQ12MON shows the status of the transmission interrupt request and the status interrupt request on MFS ch.2 and ch.10.
IRQ14MON shows the status of the transmission interrupt request and the status interrupt request on MFS ch.3 and ch.11.
IRQ16MON shows the status of the transmission interrupt request and the status interrupt request on MFS ch.4 and ch.12.
IRQ18MON shows the status of the transmission interrupt request and the status interrupt request on MFS ch.5 and ch.13.
IRQ20MON shows the status of the transmission interrupt request and the status interrupt request on MFS ch.6 and ch.14.
IRQ22MON shows the status of the transmission interrupt request and the status interrupt request on MFS ch.7 and ch15.

bit	31															16
Field	Reserved															
Attribute	R															
Initial value	0x0000															

bit	15	14	13	12	11	10	9	8	7	6	5	4	3	2	1	0
Field	Reserved												MFSINT			
Attribute	R												R			
Initial value	0x000												0000			

[bit31:4] Reserved: Reserved bits
Reads out "0".

[bit3:0] MFSINT:

bit No.	Value	Description
3	0	No status interrupt request on the corresponding MFS channel (ch.15 to
	1	Status interrupt request on the corresponding MFS channel (ch.15 to
2	0	No transmission interrupt request on the corresponding MFS channel
	1	Transmission interrupt request on the corresponding MFS channel
1	0	No status interrupt request on the corresponding MFS channel (ch.7 to
	1	Status interrupt request on the corresponding MFS channel (ch.7 to
0	0	No transmission interrupt request on the corresponding MFS channel
	1	Transmission interrupt request on the corresponding MFS channel

If DMA transfer requests are selected by the DRQSEL register, the MFSINT bit of the corresponding MFS channel (ch.0 to ch.7) is "0".

4.14. IRQ23 Batch Read Register (IRQ23MON)

IRQ23MON can batch-read the interrupt requests allocated to interrupt factor vector No. 39.

IRQ23MON shows the status of the interrupt request from PPG (ch.20, ch.18, ch.16, ch.12, ch.10, ch.8, ch.4, ch.2, ch.0).

bit	31															16
Field	Reserved															
Attribute	R															
Initial value	0x0000															

bit	15	14	13	12	11	10	9	8	7	6	5	4	3	2	1	0
Field	Reserved							PPGINT								
Attribute	R							R								
Initial value	0000000							000000000								

[bit31:9] Reserved: Reserved bits

Reads out "0".

[bit8:0] PPGINT:

bit No.	Value	Description
8	0	No interrupt request on PPG ch.20
	1	Interrupt request on PPG ch.20
7	0	No interrupt request on PPG ch.18
	1	Interrupt request on PPG ch.18
6	0	No interrupt request on PPG ch.16
	1	Interrupt request on PPG ch.16
5	0	No interrupt request on PPG ch.12
	1	Interrupt request on PPG ch.12
4	0	No interrupt request on PPG ch.10
	1	Interrupt request on PPG ch.10
3	0	No interrupt request on PPG ch.8
	1	Interrupt request on PPG ch.8
2	0	No interrupt request on PPG ch.4
	1	Interrupt request on PPG ch.4
1	0	No interrupt request on PPG ch.2
	1	Interrupt request on PPG ch.2
0	0	No interrupt request on PPG ch.0
	1	Interrupt request on PPG ch.0

4.15. IRQ24 Batch Read Register (IRQ24MON)

IRQ24MON can batch-read the interrupt requests allocated to interrupt factor vector No. 40.

bit	31							8
Field	Reserved							
Attribute	R							
Initial value	0x000000							

bit	7	6	5	4	3	2	1	0
Field	Reserved		RTCINT	WCINT	UPLLINT	MPLLINT	SOSCINT	MOSCINT
Attribute	R		R	R	R	R	R	R
Initial value	00		0	0	0	0	0	0

[bit31:6] Reserved: Reserved bits

Reads out "0".

[bit5] RTCINT:

Value	Description
0	No RTC interrupt request
1	RTC interrupt request

[bit4] WCINT:

Value	Description
0	No watch counter interrupt request
1	Watch counter interrupt request

[bit3] UPLLINT:

Value	Description
0	No stabilization wait completion interrupt request for USB or USB/Ethernet PLL oscillation
1	Stabilization wait completion interrupt request for USB or USB/Ethernet PLL oscillation

[bit2] MPLLINT:

Value	Description
0	No stabilization wait completion interrupt request for main PLL oscillation
1	Stabilization wait completion interrupt request for main PLL oscillation

[bit1] SOSCINT:

Value	Description
0	No stabilization wait completion interrupt request for sub-clock oscillation
1	Stabilization wait completion interrupt request for sub-clock oscillation

[bit0] MOSCINT:

Value	Description
0	No stabilization wait completion interrupt request for main clock oscillation
1	Stabilization wait completion interrupt request for main clock oscillation

4.16. IRQ25/26 Batch Read Register (IRQxxMON)

IRQ25MON can batch-read the interrupt requests allocated to interrupt factor vector No. 41.
IRQ26MON can batch-read the interrupt requests allocated to interrupt factor vector No. 42.

IRQ25MON shows the status of the interrupt request in A/D converter unit 0.
IRQ26MON shows the status of the interrupt request in A/D converter unit 1.

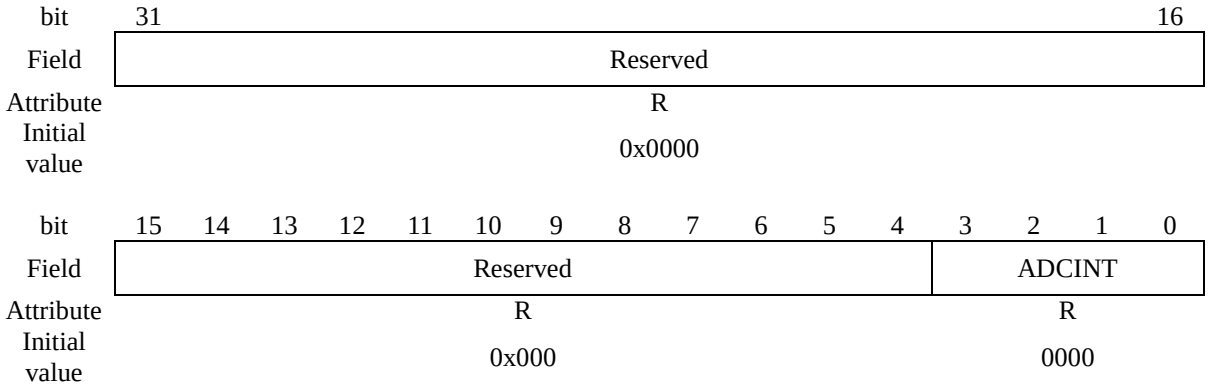

[bit31:4] Reserved: Reserved bits
Reads out "0".

[bit3:0] ADCINT:

bit No.	Value	Description
3	0	No conversion result comparison interrupt request in the corresponding A/D converter unit.
	1	Conversion result comparison interrupt request in the corresponding A/D converter unit.
2	0	No FIFO overrun interrupt request in the corresponding A/D converter unit.
	1	FIFO overrun interrupt request in the corresponding A/D converter unit.
1	0	No scan conversion interrupt request in the corresponding A/D converter unit.
	1	Scan conversion interrupt request in the corresponding A/D converter unit.
0	0	No priority conversion interrupt request in the corresponding A/D converter unit.
	1	Priority conversion interrupt request in the corresponding A/D converter unit.

If DMA transfer requests are selected by the DRQSEL register, the corresponding ADCINT bit is "0".

4.17. IRQ27 Batch Read Register (IRQ27MON)

IRQ27MON can batch-read the interrupt requests allocated to interrupt factor vector No. 43.

bit	31															16
Field	Reserved															
Attribute	R															
Initial value	0x0000															

bit	15											5	4	3	2	1	0
Field	Reserved												LCDCINT	ADCINT			
Attribute	R												R	R			
Initial value	00000000000												0	0000			

[bit31:5] Reserved: Reserved bits

Reads out "0".

[bit4] LCDCINT:

bit	Description
0	No interrupt request for LCD controller
1	Interrupt request for LCD controller

[bit3:0] ADCINT:

bit No.	Value	Description
3	0	No conversion result comparison interrupt request in the A/D converter unit2.
	1	Conversion result comparison interrupt request in the A/D converter unit2.
2	0	No FIFO overrun interrupt request in the A/D converter unit2.
	1	FIFO overrun interrupt request in the A/D converter unit2.
1	0	No scan conversion interrupt request in the A/D converter unit2.
	1	Scan conversion interrupt request in the A/D converter unit2.
0	0	No priority conversion interrupt request in the A/D converter unit2.
	1	Priority conversion interrupt request in the A/D converter unit2.

If DMA transfer requests are selected by the DRQSEL register, the corresponding ADCINT bit is "0".

4.18. IRQ28 Batch Read Register (IRQ28MON)

IRQ28MON can batch-read the interrupt requests allocated to interrupt factor vector No. 44.

bit	31 … 18	17	16
Field	Reserved	FRT2INT	
Attribute	R	R	
Initial value	00000000000000	00	

bit	15	14	13	12	11	10	9	8	7	6	5	4	3	2	1	0
Field	FRT2INT				FRT1INT						FRT0INT					
Attribute	R				R						R					
Initial value	0000				000000						000000					

[bit31:18] Reserved: Reserved bits

Reads out "0".

[bit17:12] FRT2INT:

bit No.	Value	Description
17	0	No zero detection interrupt request on the free run timer ch.2 in the MFT unit 2
	1	Zero detection interrupt request on the free run timer ch.2 in the MFT unit 2
16	0	No zero detection interrupt request on the free run timer ch.1 in the MFT unit 2
	1	Zero detection interrupt request on the free run timer ch.1 in the MFT unit 2
15	0	No zero detection interrupt request on the free run timer ch.0 in the MFT unit 2
	1	Zero detection interrupt request on the free run timer ch.0 in the MFT unit 2
14	0	No peak value detection interrupt request on the free run timer ch.2 in the MFT unit 2
	1	Peak value detection interrupt request on the free run timer ch.2 in the MFT unit 2
13	0	No peak value detection interrupt request on the free run timer ch.1 in the MFT unit 2
	1	Peak value detection interrupt request on the free run timer ch.1 in the MFT unit 2
12	0	No peak value detection interrupt request on the free run timer ch.0 in the MFT unit 2
	1	Peak value detection interrupt request on the free run timer ch.0 in the MFT unit 2

[bit11:6] FRT1INT:

bit No.	Value	Description
11	0	No zero detection interrupt request on the free run timer ch.2 in the MFT unit 1
	1	Zero detection interrupt request on the free run timer ch.2 in the MFT unit 1
10	0	No zero detection interrupt request on the free run timer ch.1 in the MFT unit 1
	1	Zero detection interrupt request on the free run timer ch.1 in the MFT unit 1
9	0	No zero detection interrupt request on the free run timer ch.0 in the MFT unit 1
	1	Zero detection interrupt request on the free run timer ch.0 in the MFT unit 1
8	0	No peak value detection interrupt request on the free run timer ch.2 in the MFT unit 1
	1	Peak value detection interrupt request on the free run timer ch.2 in the MFT unit 1
7	0	No peak value detection interrupt request on the free run timer ch.1 in the MFT unit 1
	1	Peak value detection interrupt request on the free run timer ch.1 in the MFT unit 1
6	0	No peak value detection interrupt request on the free run timer ch.0 in the MFT unit 1
	1	Peak value detection interrupt request on the free run timer ch.0 in the MFT unit 1

[bit5:0] FRT0INT:

bit No.	Value	Description
5	0	No zero detection interrupt request on the free run timer ch.2 in the MFT unit 0
	1	Zero detection interrupt request on the free run timer ch.2 in the MFT unit 0
4	0	No zero detection interrupt request on the free run timer ch.1 in the MFT unit 0
	1	Zero detection interrupt request on the free run timer ch.1 in the MFT unit 0
3	0	No zero detection interrupt request on the free run timer ch.0 in the MFT unit 0
	1	Zero detection interrupt request on the free run timer ch.0 in the MFT unit 0
2	0	No peak value detection interrupt request on the free run timer ch.2 in the MFT unit 0
	1	Peak value detection interrupt request on the free run timer ch.2 in the MFT unit 0
1	0	No peak value detection interrupt request on the free run timer ch.1 in the MFT unit 0
	1	Peak value detection interrupt request on the free run timer ch.1 in the MFT unit 0
0	0	No peak value detection interrupt request on the free run timer ch.0 in the MFT unit 0
	1	Peak value detection interrupt request on the free run timer ch.0 in the MFT unit 0

4.19. IRQ29 Batch Read Register (IRQ29MON)

IRQ29MON can batch-read the interrupt requests allocated to interrupt factor vector No. 45.

bit	31															16
Field	Reserved															
Attribute	R															
Initial value	0x0000															

bit	15	14	13	12	11	10	9	8	7	6	5	4	3	2	1	0
Field	Reserved				ICU2INT				ICU1INT				ICU0INT			
Attribute	R				R				R				R			
Initial value	0000				0000				0000				0000			

[bit31:12] Reserved: Reserved bits

Reads out "0".

[bit11:8] ICU2INT:

bit No.	Value	Description
11	0	No interrupt request on the input capture ch.3 in the MFT unit 2
	1	Interrupt request on the input capture ch.3 in the MFT unit 2
10	0	No interrupt request on the input capture ch.2 in the MFT unit 2
	1	Interrupt request on the input capture ch.2 in the MFT unit 2
9	0	No interrupt request on the input capture ch.1 in the MFT unit 2
	1	Interrupt request on the input capture ch.1 in the MFT unit 2
8	0	No interrupt request on the input capture ch.0 in the MFT unit 2
	1	Interrupt request on the input capture ch.0 in the MFT unit 2

[bit7:4] ICU1INT:

bit No.	Value	Description
7	0	No interrupt request on the input capture ch.3 in the MFT unit 1
	1	Interrupt request on the input capture ch.3 in the MFT unit 1
6	0	No interrupt request on the input capture ch.2 in the MFT unit 1
	1	Interrupt request on the input capture ch.2 in the MFT unit 1
5	0	No interrupt request on the input capture ch.1 in the MFT unit 1
	1	Interrupt request on the input capture ch.1 in the MFT unit 1
4	0	No interrupt request on the input capture ch.0 in the MFT unit 1
	1	Interrupt request on the input capture ch.0 in the MFT unit 1

[bit3:0] ICU0INT:

bit No.	Value	Description
3	0	No interrupt request on the input capture ch.3 in the MFT unit 0
	1	Interrupt request on the input capture ch.3 in the MFT unit 0
2	0	No interrupt request on the input capture ch.2 in the MFT unit 0
	1	Interrupt request on the input capture ch.2 in the MFT unit 0
1	0	No interrupt request on the input capture ch.1 in the MFT unit 0
	1	Interrupt request on the input capture ch.1 in the MFT unit 0
0	0	No interrupt request on the input capture ch.0 in the MFT unit 0
	1	Interrupt request on the input capture ch.0 in the MFT unit 0

4.20. IRQ30 Batch Read Register (IRQ30MON)

IRQ30MON can batch-read the interrupt requests allocated to interrupt factor vector No. 46.

bit	31														18	17	16
Field	Reserved															OCU2INT	
Attribute	R															R	
Initial value	00000000000000															00	

bit	15	14	13	12	11	10	9	8	7	6	5	4	3	2	1	0
Field	OCU2INT				OCU1INT						OCU0INT					
Attribute	R				R						R					
Initial value	0000				000000						000000					

[bit31:18] Reserved: Reserved bits
Reads out "0".

[bit17:12] OCU2INT:

bit No.	Value	Description
17	0	No interrupt request on the output compare ch.5 in the MFT unit 2
	1	Interrupt request on the output compare ch.5 in the MFT unit 2
16	0	No interrupt request on the output compare ch.4 in the MFT unit 2
	1	Interrupt request on the output compare ch.4 in the MFT unit 2
15	0	No interrupt request on the output compare ch.3 in the MFT unit 2
	1	Interrupt request on the output compare ch.3 in the MFT unit 2
14	0	No interrupt request on the output compare ch.2 in the MFT unit 2
	1	Interrupt request on the output compare ch.2 in the MFT unit 2
13	0	No interrupt request on the output compare ch.1 in the MFT unit 2
	1	Interrupt request on the output compare ch.1 in the MFT unit 2
12	0	No interrupt request on the output compare ch.0 in the MFT unit 2
	1	Interrupt request on the output compare ch.0 in the MFT unit 2

[bit11:6] OCU1INT:

bit No.	Value	Description
11	0	No interrupt request on the output compare ch.5 in the MFT unit 1
	1	Interrupt request on the output compare ch.5 in the MFT unit 1
10	0	No interrupt request on the output compare ch.4 in the MFT unit 1
	1	Interrupt request on the output compare ch.4 in the MFT unit 1
9	0	No interrupt request on the output compare ch.3 in the MFT unit 1
	1	Interrupt request on the output compare ch.3 in the MFT unit 1
8	0	No interrupt request on the output compare ch.2 in the MFT unit 1
	1	Interrupt request on the output compare ch.2 in the MFT unit 1
7	0	No interrupt request on the output compare ch.1 in the MFT unit 1
	1	Interrupt request on the output compare ch.1 in the MFT unit 1
6	0	No interrupt request on the output compare ch.0 in the MFT unit 1
	1	Interrupt request on the output compare ch.0 in the MFT unit 1

[bit5:0] OCU0INT:

bit No.	Value	Description
5	0	No interrupt request on the output compare ch.5 in the MFT unit 0
	1	Interrupt request on the output compare ch.5 in the MFT unit 0
4	0	No interrupt request on the output compare ch.4 in the MFT unit 0
	1	Interrupt request on the output compare ch.4 in the MFT unit 0
3	0	No interrupt request on the output compare ch.3 in the MFT unit 0
	1	Interrupt request on the output compare ch.3 in the MFT unit 0
2	0	No interrupt request on the output compare ch.2 in the MFT unit 0
	1	Interrupt request on the output compare ch.2 in the MFT unit 0
1	0	No interrupt request on the output compare ch.1 in the MFT unit 0
	1	Interrupt request on the output compare ch.1 in the MFT unit 0
0	0	No interrupt request on the output compare ch.0 in the MFT unit 0
	1	Interrupt request on the output compare ch.0 in the MFT unit 0

4.21. IRQ31 Batch Read Register (IRQ31MON)

IRQ31MON can batch-read the interrupt requests allocated to interrupt factor vector No. 47.

bit	31															16
Field	Reserved															
Attribute	R															
Initial value	0x0000															

bit	15	14	13	12	11	10	9	8	7	6	5	4	3	2	1	0
Field	BTINT															
Attribute	R															
Initial value	0x0000															

[bit31:16] Reserved: Reserved bits

Reads out "0".

[bit15:0] BTINT:

bit No.	Value	Description
15	0	No IRQ1 interrupt request on the base timer ch.7
	1	IRQ1 interrupt request on the base timer ch.7
14	0	No IRQ0 interrupt request on the base timer ch.7
	1	IRQ0 interrupt request on the base timer ch.7
13	0	No IRQ1 interrupt request on the base timer ch.6
	1	IRQ1 interrupt request on the base timer ch.6
12	0	No IRQ0 interrupt request on the base timer ch.6
	1	IRQ0 interrupt request on the base timer ch.6
11	0	No IRQ1 interrupt request on the base timer ch.5
	1	IRQ1 interrupt request on the base timer ch.5
10	0	No IRQ0 interrupt request on the base timer ch.5
	1	IRQ0 interrupt request on the base timer ch.5
9	0	No IRQ1 interrupt request on the base timer ch.4
	1	IRQ1 interrupt request on the base timer ch.4
8	0	No IRQ0 interrupt request on the base timer ch.4
	1	IRQ0 interrupt request on the base timer ch.4
7	0	No IRQ1 interrupt request on the base timer ch.3
	1	IRQ1 interrupt request on the base timer ch.3
6	0	No IRQ0 interrupt request on the base timer ch.3
	1	IRQ0 interrupt request on the base timer ch.3
5	0	No IRQ1 interrupt request on the base timer ch.2
	1	IRQ1 interrupt request on the base timer ch.2

bit No.	Value	Description
4	0	No IRQ0 interrupt request on the base timer ch.2
	1	IRQ0 interrupt request on the base timer ch.2
3	0	No IRQ1 interrupt request on the base timer ch.1
	1	IRQ1 interrupt request on the base timer ch.1
2	0	No IRQ0 interrupt request on the base timer ch.1
	1	IRQ0 interrupt request on the base timer ch.1
1	0	No IRQ1 interrupt request on the base timer ch.0
	1	IRQ1 interrupt request on the base timer ch.0
0	0	No IRQ0 interrupt request on the base timer ch.0
	1	IRQ0 interrupt request on the base timer ch.0

If DMA transfer requests are selected by the DRQSEL register, the corresponding BTINT bit is "0".

As shown in the Table 4-1, base timer interrupt factors IRQ0 and IRQ1 differ depending on the base timer function to be used.

Table 4-1 Interrupt factors for each function of the base timer

Function	Interrupt Factor IRQ0	Interrupt Factor IRQ1
16-bit PWM timer	Underflow detection/ duty match detection	Timer start trigger detection
16-bit PPG timer	Underflow detection	Timer start trigger detection
16/32-bit reload timer	Underflow detection	Timer start trigger detection
16/32-bit PWC timer	Overflow detection	Measurement finished detection

4.22. IRQ32 Batch Read Register (IRQ32MON)

IRQ32MON can batch-read the interrupt requests allocated to interrupt factor vector No. 48.

IRQ32MON shows the status of the interrupt request on the Ethernet MAC ch.0 and CAN ch.0.

bit	31	...	8
Field	Reserved		
Attribute	R		
Initial value	0x000000		

bit	7	6	5	4	3	2	1	0
Field	Reserved				MAC0LPI	MAC0PMI	MAC0SBD	CAN0INT
Attribute	R				R	R	R	R
Initial value	0000				0	0	0	0

[bit31:4] Reserved: Reserved bits

Reads out "0".

[bit3] MAC0LPI:

Value	Description
0	No LPI interrupt request of Ethernet MAC ch.0
1	LPI interrupt request of Ethernet MAC ch.0

[bit2] MAC0PMI:

Value	Description
0	No PMI interrupt request of Ethernet MAC ch.0
1	PMI interrupt request of Ethernet MAC ch.0

[bit1] MAC0SBD:

Value	Description
0	No SBD interrupt request of Ethernet MAC ch.0
1	SBD interrupt request of Ethernet MAC ch.0

[bit0] CAN0INT:

Value	Description
0	No interrupt request of CAN ch.0
1	Interrupt request of CAN ch.0

4.23. IRQ33 Batch Read Register (IRQ33MON)

IRQ33MON can batch-read the interrupt requests allocated to interrupt factor vector No. 49.

IRQ33MON shows the status of the interrupt request on the Ethernet MAC ch.1 and CAN ch.1.

bit	31							8
Field	Reserved							
Attribute	R							
Initial value	0x000000							

bit	7	6	5	4	3	2	1	0
Field	Reserved					MAC1PMI	MAC1SBD	CAN1INT
Attribute	R					R	R	R
Initial value	00000					0	0	0

[bit31:3] Reserved: Reserved bits

Reads out "0".

[bit2] MAC1PMI:

Value	Description
0	No PMI interrupt request of Ethernet MAC ch.1
1	PMI interrupt request of Ethernet MAC ch.1

[bit1] MAC1SBD:

Value	Description
0	No SBD interrupt request of Ethernet MAC ch.1
1	SBD interrupt request of Ethernet MAC ch.1

[bit0] CAN1INT:

Value	Description
0	No interrupt request of CAN ch.1
1	Interrupt request of CAN ch.1

4.24. IRQ34 Batch Read Register (IRQ34MON)

IRQ34MON can batch-read the interrupt requests allocated to interrupt factor vector No. 50.

bit	31															16
Field	Reserved															
Attribute	R															
Initial value	0x0000															

bit	15	14	13	12	11	10	9	8	7	6	5	4	3	2	1	0
Field	Reserved											USB0INT				
Attribute	R											R				
Initial value	00000000000											00000				

[bit31:5] Reserved: Reserved bits

Reads out "0".

[bit4:0] USB0INT:

bit No.	Value	Description
4	0	No Endpoint 5 DRQ interrupt request on the USB ch.0
	1	Endpoint 5 DRQ interrupt request on the USB ch.0
3	0	No Endpoint 4 DRQ interrupt request on the USB ch.0
	1	Endpoint 4 DRQ interrupt request on the USB ch.0
2	0	No Endpoint 3 DRQ interrupt request on the USB ch.0
	1	Endpoint 3 DRQ interrupt request on the USB ch.0
1	0	No Endpoint 2 DRQ interrupt request on the USB ch.0
	1	Endpoint 2 DRQ interrupt request on the USB ch.0
0	0	No Endpoint 1 DRQ interrupt request on the USB ch.0
	1	Endpoint 1 DRQ interrupt request on the USB ch.0

If DMA transfer requests are selected by the DRQSEL register, the corresponding USB0INT bit is "0".

4.25. IRQ35 Batch Read Register (IRQ35MON)

IRQ35MON can batch-read the interrupt requests allocated to interrupt factor vector No. 51.

bit	31															16
Field	Reserved															
Attribute	R															
Initial value	0x0000															

bit	15	14	13	12	11	10	9	8	7	6	5	4	3	2	1	0
Field	Reserved										USB0INT					
Attribute	R										R					
Initial value	0000000000										000000					

[bit31:6] Reserved: Reserved bits

Reads out "0".

[bit5:0] USB0INT:

bit No.	Value	Description
5	0	No status (SOFIRQ, CMPIRO) interrupt request on the USB ch.0
	1	Status (SOFIRQ, CMPIRO) interrupt request on the USB ch.0
4	0	No status (DIRQ, URIRQ, RWKIRQ, CNNIRQ) interrupt request on the USB ch.0
	1	Status (DIRQ, URIRQ, RWKIRQ, CNNIRQ) interrupt request on the USB ch.0
3	0	No status (SPK) interrupt request on the USB ch.0
	1	Status (SPK) interrupt request on the USB ch.0
2	0	No status (SUSP, SOF, BRST, CONF, WKUP) interrupt request on the USB ch.0
	1	Status (SUSP, SOF, BRST, CONF, WKUP) interrupt request on the USB ch.0
1	0	No Endpoint 0 DRQO interrupt request on the USB ch.0
	1	Endpoint 0 DRQO interrupt request on the USB ch.0
0	0	No Endpoint 0 DRQI interrupt request on the USB ch.0
	1	Endpoint 0 DRQI interrupt request on the USB ch.0

4.26. IRQ36 Batch Read Register (IRQ36MON)

IRQ36MON can batch-read the interrupt requests allocated to interrupt factor vector No. 52.

bit	31															16
Field	Reserved															
Attribute	R															
Initial value	0x0000															

bit	15									6	5	4	3	2	1	0
Field	Reserved										RCEC0INT	USB1INT				
Attribute	R										R	R				
Initial value	0000000000										0	00000				

[bit31:6] Reserved: Reserved bits

Reads out "0".

[bit5] RCEC0INT:

Value	Description
0	No interrupt request for HDMI-CEC/Remote Control Reception ch.0
1	Interrupt request for HDMI-CEC/Remote Control Reception ch.0

[bit4:0] USB1INT:

bit No.	Value	Description
4	0	No interrupt request of USB ch.1 Endpoint5 DRQ
	1	Interrupt request of USB ch.1 Endpoint5 DRQ
3	0	No interrupt request of USB ch.1 Endpoint4 DRQ
	1	Interrupt request of USB ch.1 Endpoint4 DRQ
2	0	No interrupt request of USB ch.1 Endpoint3 DRQ
	1	Interrupt request of USB ch.1 Endpoint3 DRQ
1	0	No interrupt request of USB ch.1 Endpoint2 DRQ
	1	Interrupt request of USB ch.1 Endpoint2 DRQ
0	0	No interrupt request of USB ch.1 Endpoint1 DRQ
	1	Interrupt request of USB ch.1 Endpoint1 DRQ

If DMA transfer requests are selected by the DRQSEL1 register, the corresponding USB1INT bit is "0".

4.27. IRQ37 Batch Read Register (IRQ37MON)

IRQ37MON can batch-read the interrupt requests allocated to interrupt factor vector No. 53.

bit	31															16
Field	Reserved															
Attribute	R															
Initial value	0x0000															

bit	15							7	6	5	4	3	2	1	0
Field	Reserved								RCEC1INT	USB1INT					
Attribute	R								R	R					
Initial value	000000000								0	000000					

[bit31:7] Reserved: Reserved bits

Reads out "0".

[bit6] RCEC1INT:

Value	Description
0	No interrupt request for HDMI-CEC/Remote Control Reception ch.1
1	Interrupt request for HDMI-CEC/Remote Control Reception ch.1

[bit5:0] USB1INT:

bit No.	Value	Description
5	0	No interrupt request of USB ch.1 status (SOFIRQ, CMPIRQ)
	1	Interrupt request of USB ch.1 status (SOFIRQ, CMPIRQ)
4	0	No interrupt request of USB ch.1 status (DIRQ, URIRQ, RWKIRQ,
	1	Interrupt request of USB ch.1 status (DIRQ, URIRQ, RWKIRQ,
3	0	No interrupt request of USB ch.1 status (SPK)
	1	Interrupt request of USB ch.1 status (SPK)
2	0	No interrupt request of USB ch.1 status (SUSP, SOF, BRST, CONF,
	1	Interrupt request of USB ch.1 status (SUSP, SOF, BRST, CONF,
1	0	No Endpoint 0 DRQO interrupt request on the USB ch.1
	1	Endpoint 0 DRQO interrupt request on the USB ch.1
0	0	No Endpoint 0 DRQI interrupt request on the USB ch.1
	1	Endpoint 0 DRQI interrupt request on the USB ch.1

4.28. IRQ38/39/40/41/42/43/44/45 Batch Read Register (IRQxxMON)

IRQ38MON can batch-read the interrupt requests allocated to interrupt factor vector No. 54.
IRQ39MON can batch-read the interrupt requests allocated to interrupt factor vector No. 55.
IRQ40MON can batch-read the interrupt requests allocated to interrupt factor vector No. 56.
IRQ41MON can batch-read the interrupt requests allocated to interrupt factor vector No. 57.
IRQ42MON can batch-read the interrupt requests allocated to interrupt factor vector No. 58.
IRQ43MON can batch-read the interrupt requests allocated to interrupt factor vector No. 59.
IRQ44MON can batch-read the interrupt requests allocated to interrupt factor vector No. 60.
IRQ45MON can batch-read the interrupt requests allocated to interrupt factor vector No. 61.

IRQ38MON shows the status of the interrupt request on the DMAC ch.0.
IRQ39MON shows the status of the interrupt request on the DMAC ch.1.
IRQ40MON shows the status of the interrupt request on the DMAC ch.2.
IRQ41MON shows the status of the interrupt request on the DMAC ch.3.
IRQ42MON shows the status of the interrupt request on the DMAC ch.4.
IRQ43MON shows the status of the interrupt request on the DMAC ch.5.
IRQ44MON shows the status of the interrupt request on the DMAC ch.6.
IRQ45MON shows the status of the interrupt request on the DMAC ch.7.

bit	31															16
Field	Reserved															
Attribute	R															
Initial value	0x0000															

bit	15	14	13	12	11	10	9	8	7	6	5	4	3	2	1	0
Field	Reserved															DMAINT
Attribute	R															R
Initial value	000000000000000															0

[bit31:1] Reserved: Reserved bits
Reads out "0".

[bit0] DMAINT:

Value	Description
0	No interrupt request on the corresponding DMA controller channel.
1	Interrupt request on the corresponding DMA controller channel.

4.29. IRQ46 Batch Read Register (IRQ46MON)

IRQ46MON can batch-read the interrupt requests allocated to interrupt factor vector No. 62.

bit	31															16
Field	Reserved															
Attribute	R															
Initial value	0x0000															

bit	15	14	13	12	11	10	9	8	7	6	5	4	3	2	1	0
Field	BTINT															
Attribute	R															
Initial value	0x0000															

[bit31:16] Reserved: Reserved bits

Reads out "0".

[bit15:0] BTINT:

bit No.	Value	Description
15	0	No IRQ1 interrupt request of base timer ch.15
	1	IRQ1 interrupt request of base timer ch.15
14	0	No IRQ0 interrupt request of base timer ch.15
	1	IRQ0 interrupt request of base timer ch.15
13	0	No IRQ1 interrupt request of base timer ch.14
	1	IRQ1 interrupt request of base timer ch.14
12	0	No IRQ0 interrupt request of base timer ch.14
	1	IRQ0 interrupt request of base timer ch.14
11	0	No IRQ1 interrupt request of base timer ch.13
	1	IRQ1 interrupt request of base timer ch.13
10	0	No IRQ0 interrupt request of base timer ch.13
	1	IRQ0 interrupt request of base timer ch.13
9	0	No IRQ1 interrupt request of base timer ch.12
	1	IRQ1 interrupt request of base timer ch.12
8	0	No IRQ0 interrupt request of base timer ch.12
	1	IRQ0 interrupt request of base timer ch.12
7	0	No IRQ1 interrupt request of base timer ch.11
	1	IRQ1 interrupt request of base timer ch.11

bit No.	Value	Description
6	0	No IRQ0 interrupt request of base timer ch.11
	1	IRQ0 interrupt request of base timer ch.11
5	0	No IRQ1 interrupt request of base timer ch.10
	1	IRQ1 interrupt request of base timer ch.10
4	0	No IRQ0 interrupt request of base timer ch.10
	1	IRQ0 interrupt request of base timer ch.10
3	0	No IRQ1 interrupt request of base timer ch.9
	1	IRQ1 interrupt request of base timer ch.9
2	0	No IRQ0 interrupt request of base timer ch.9
	1	IRQ0 interrupt request of base timer ch.9
1	0	No IRQ1 interrupt request of base timer ch.8
	1	IRQ1 interrupt request of base timer ch.8
0	0	No IRQ0 interrupt request of base timer ch.8
	1	IRQ0 interrupt request of base timer ch.8

As shown in the table below, the interrupt factors IRQ0 and IRQ1 of the base timer differ by the base timer's function to be used.

Table 4-2 Interrupt factor in each base timer function

Function	Interrupt Factor IRQ0	Interrupt Factor IRQ1
16-bit PWM timer	Detection of underflow/ detection of duty match	Detection of timer start trigger
16-bit PPG timer	Detection of underflow	Detection of timer start trigger
16/32-bit reload timer	Detection of underflow	Detection of timer start trigger
16/32-bit PWC timer	Detection of overflow	Detection of measurement end

4.30. IRQ47 Batch Read Register (IRQ47MON)

IRQ47MON can batch-read the interrupt requests allocated to interrupt factor vector No. 63.

bit	31															16
Field	Reserved															
Attribute	R															
Initial value	0x0000															

bit	15	14	13	12	11	10	9	8	7	6	5	4	3	2	1	0
Field	Reserved				FLASHINT	Reserved										
Attribute	R				R	R										
Initial value	0000				0	00000000000										

[bit31:12] Reserved: Reserved bits

Reads out "0".

[bit11] FLASHINT:

Value	Description
0	No RDY, HANG interrupt request for flash memory
1	RDY, HANG interrupt request for flash memory

[bit10:0] Reserved: Reserved bits

Reads out "0".

4.31. USB ch.0 Odd Packet Size DMA Enable Register (ODDPKS)

When transferred in USB ch.0 automatic transfer IN direction, the effective bit width only for the last data of the last packet is forcibly converted to Byte (8 bit) and is written in the USB endpoint (which exists for TYPE1 products or later).

bit	31 29	28 24	23 16
Field	Reserved	ODDPKS[4:0]	Reserved
Attribute	R/W	R/W	R/W
Initial value	000	00000	0x00

bit	15 0
Field	Reserved
Attribute	R/W
Initial value	0x0000

[bit31:29] Reserved: Reserved bits

Set these bits to "0". Reads out "0".

[bit28] ODDPKS4:

Value	Description
0	DMA transfer bit width is not converted.
1	When the transfer destination address of DMAC is USB:EP5DT, the bit width of the last transfer data is converted to Byte.

[bit27] ODDPKS3:

Value	Description
0	DMA transfer bit width is not converted.
1	When the transfer destination address of DMAC is USB:EP4DT, the bit width of the last transfer data is converted to Byte.

[bit26] ODDPKS2:

Value	Description
0	DMA transfer bit width is not converted.
1	When the transfer destination address of DMAC is USB:EP3DT, the bit width of the last transfer data is converted to Byte.

[bit25] ODDPKS1:

Value	Description
0	DMA transfer bit width is not converted.
1	When the transfer destination address of DMAC is USB:EP2DT, the bit width of the last transfer data is converted to Byte.

[bit24] ODDPKS0:

Value	Description
0	DMA transfer bit width is not converted.
1	When the transfer destination address of DMAC is USB:EP1DT, the bit width of the last transfer data is converted to Byte.

[bit23:0] Reserved: Reserved bits

Set these bits to "0". Reads out "0".

<Notes>

- This register is enabled only when transferring to IN direction in the USB data number automatic transfer mode in USB ch.0.
- Do not set to "1" when transferring even bytes.

4.32. USB ch.1 Odd Packet Size DMA Enable Register (ODDPKS1)

When transferred in USB ch.1 automatic transfer IN direction, the effective bit width only for the last data of the last packet is forcibly converted to Byte (8 bit) and is written in the USB endpoint (which exists for TYPE2 products only).

bit	31 29	28 24	23 16
Field	Reserved	ODDPKS1[4:0]	Reserved
Attribute	R/W	R/W	R/W
Initial value	000	00000	0x00

bit	15 0
Field	Reserved
Attribute	R/W
Initial value	0x0000

[bit31:29] Reserved: Reserved bits

Set these bits to "0". Reads out "0".

[bit28] ODDPKS14:

Value	Description
0	Does not convert the bit width of DMA transfer
1	When the transfer destination address of the DMAC is USB:EP5DT, convert the bit width of the last transfer data to byte.

[bit27] ODDPKS13:

Value	Description
0	Does not convert the bit width of DMA transfer
1	When the transfer destination address of the DMAC is USB:EP4DT, convert the bit width of the last transfer data to byte.

[bit26] ODDPKS12:

Value	Description
0	Does not convert the bit width of DMA transfer
1	When the transfer destination address of the DMAC is USB:EP3DT, convert the bit width of the last transfer data to byte.

[bit25] ODDPKS11:

Value	Description
0	Does not convert the bit width of DMA transfer
1	When the transfer destination address of the DMAC is USB:EP2DT, convert the bit width of the last transfer data to byte.

[bit24] ODDPKS10:

Value	Description
0	Does not convert the bit width of DMA transfer
1	When the transfer destination address of the DMAC is USB:EP1DT, convert the bit width of the last transfer data to byte.

[bit23:0] Reserved: Reserved bits

Set these bits to "0". Reads out "0".

<Notes>

- This register is enabled only when transferring to IN direction in the USB data number automatic transfer mode in USB ch.1.
- Do not set to "1" when transferring even bytes.

5. Usage Precautions

Be careful with the following points when using the interrupt controller.

- The interrupt request signals from each of the peripheral resources are notified by level. When exiting from interrupt processing, always clear the interrupt request.
- When other interruption with a high priority is processing, the interrupt request from peripheral functions notified to NVIC is pended inside NVIC. When canceling the interrupt request which was pended inside NVIC, clear the interrupt request from peripheral functions, and clear the interrupt request which was pended inside NVIC by the Interrupt Clear-Pending Registers (addresses: 0xE000E280 to 0xE000E29C) installed in the NVIC.
- The NMIX pin is allocated shared with a general-purpose port. The initial value after reset is released is configured as a general-purpose port, and the NMI input is masked. In order to use the NMI, enable NMI by configuring the port setting. See the chapter of "External Interrupt and NMI Control Unit" for details.
- See the chapters for each of the macros for the correlation between the specific event detection registers and interrupt enable registers in each peripheral resource.

CHAPTER 7-3: Interrupts (B)

This chapter explains the interrupt controller and peripheral interrupt requests when interrupt factor vector relocate function is selected. See this chapter when IRQCMODE=1. See the chapter "Interrupts (A)" when IRQCMODE=0.

1. Overview
2. Configuration
3. Exception and Interrupt Factor Vectors
4. Registers
5. Usage Precautions

1. Overview

The interrupt controller determines the priority of interrupt requests and sends the requests to the CPU. The Cortex-M3 CPU core is equipped with the nested vectored interrupt controller (NVIC) internally within the core. Interrupt signals from several peripherals are aggregated and input to a single interrupt factor vector. The interrupt requests that have occurred can be checked using the interrupt request batch read register. Furthermore, for some of the interrupt factors, the interrupt requests can be configured to be converted into DMA request signals.

■Features of the Nested Vectored Interrupt Controller (NVIC)

·48 maskable peripheral interrupt channels (not including the 16 exception interrupts of Cortex-M3)
·16 programmable interrupt priority levels (using 4-bit prioritized interrupts)
·Facilitates low-latency exception and interrupt handling
·Implements System Control Registers
·Supports non-maskable interrupt (NMI) input

The NVIC and the processor core interface are closely coupled, providing mechanisms that enable low-latency interrupt processing and efficient processing of late arriving interrupts. The NVIC maintains the nested interrupt information to enable tail chaining of interrupts.

All interrupts are managed by the NVIC, including core exceptions. See "Chapter 5: Exceptions" and "Chapter 8: Nested Vectored Interrupt Controller" in the "Cortex-M3 Technical Reference Manual" published by Arm for details on exceptions and NVIC.

<Note>

In the "Cortex-M3 Technical Reference Manual", all exception type:IRQ are defined as external interrupt inputs. In this manual, exception type:IRQ are expressed as peripheral interrupts. Peripheral interrupts include "External Interrupt and NMI Control Unit" interrupts from external pins and interrupts from peripheral resources within the LSI.

■Interrupt Factor Aggregation Function

The interrupt request signals from each peripheral resource are aggregated into 48 sources and input to the NVIC. Furthermore, the interrupt request signal from the external NMIX pin is logically OR'ed with the hardware watchdog interrupt signal and input to the NVIC.

■Peripheral Interrupt Request Batch Read Function

The interrupt request batch read register allows the interrupt request signals from the peripheral resources aggregated into a single interrupt request signal to be read out at once. Reading this register makes it possible to check which interrupt request has occurred. However, the interrupt request flags cannot be cleared by using this function. Clear the interrupt request flags using the registers of each peripheral function.

■DMA transfer request output select function

DMA transfer can be activated using interrupt request from some peripheral functions. By the DRQSEL register, select to output interrupt request signal from each peripheral resource to the CPU as the interrupt request signal or to output it to DMAC as a transfer request signal. Also, for the DMA transfer request signal, see the chapter "DMAC".

2. Configuration

This section shows the configuration of the relationship between the interrupt controller and DMA transfer requests.

■Block Diagram of Interrupt Controller and DMA Transfer Request

Figure 2-1 Block Diagram of Interrupt Controller and DMA Transfer Request

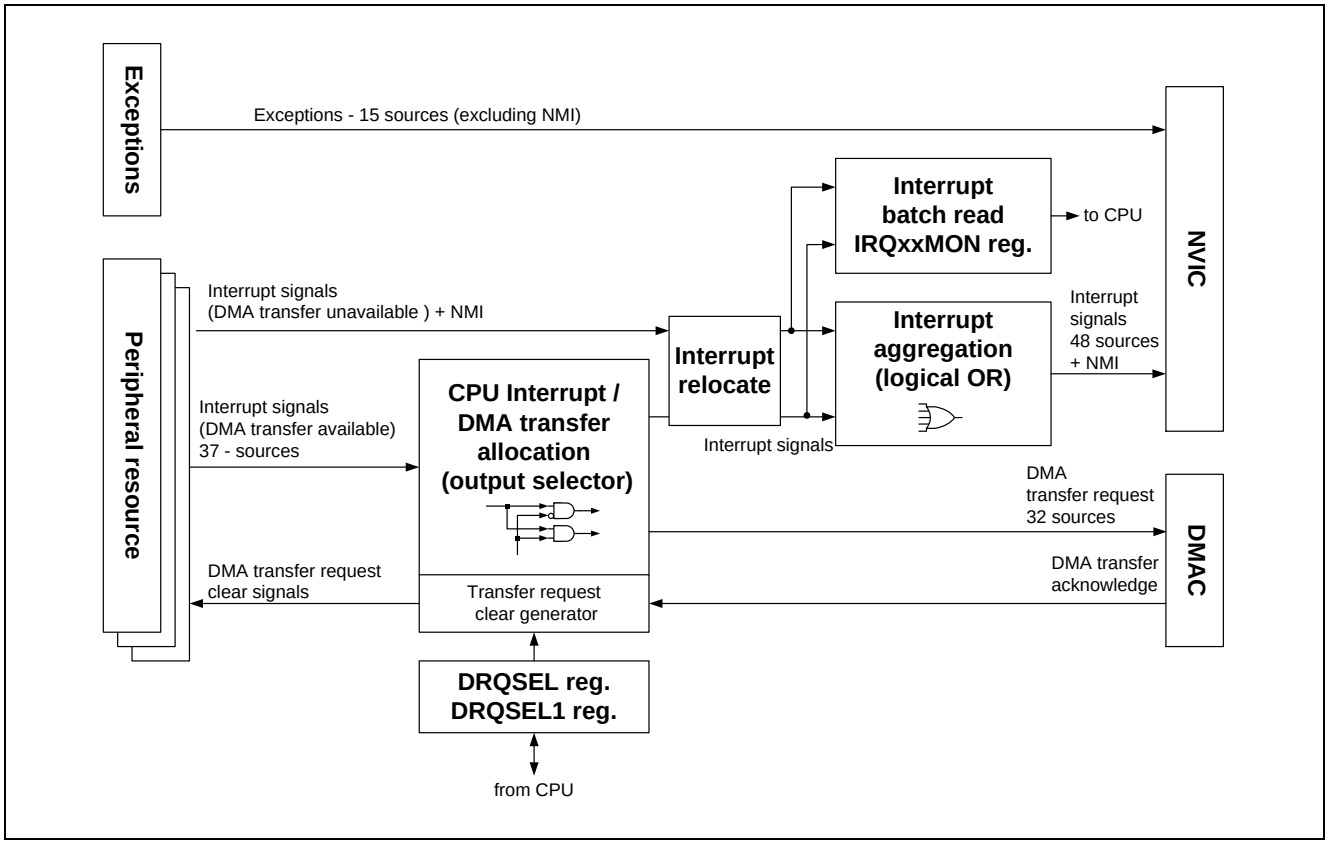

●Interrupt factor aggregation block

Aggregate (logical OR) interrupt request signals from each peripheral resource to 48 factors and output them to NVIC.

●Peripheral interrupt request batch read register block

For interrupt request signals from a peripheral resource aggregated to one interrupt request signal, this register can check what interrupt request signal of each peripheral resource signal generates such interrupt.

●CPU interrupt request/DMA transfer request allocation block

This is the output selector that selects whether to output interrupt request signal from a peripheral resource to the CPU as an interrupt request signal or to DMAC as a transfer request signal by using the DRQSEL register setting.

3. Exception and Interrupt Factor Vectors

This section shows a factor vector table of the exceptions and interrupts input to the NVIC.

Table 3-1 Exception and interrupt factor vectors

Vector No.	IRQ No.	Exception and Interrupt Factor	Vector Offset
0	-	Stack pointer initial value	0x00
1	-	Reset	0x04
2	-	Non-Maskable Interrupt (NMI) / Hardware Watchdog Timer	0x08
3	-	Hard Fault	0x0C
4	-	Memory Management	0x10
5	-	Bus Fault	0x14
6	-	Usage Fault	0x18
7-10	-	Reserved	0x1C - 0x2B
11	-	SVCall (Supervisor Call)	0x2C
12	-	Debug Monitor	0x30
13	-	Reserved	0x34
14	-	PendSV	0x38
15	-	SysTick	0x3C
16	0	Anomalous Frequency Detection (FCS) by Clock Supervisor	0x40
17	1	Software Watchdog Timer	0x44
18	2	Low Voltage Detector (LVD)	0x48
19	3	Interrupt factor selected with RCINTSEL0:INTSEL0 register	0x4C
20	4	Interrupt factor selected with RCINTSEL0:INTSEL1 register	0x50
21	5	Interrupt factor selected with RCINTSEL0:INTSEL2 register	0x54
22	6	Interrupt factor selected with RCINTSEL0:INTSEL3 register	0x58
23	7	Interrupt factor selected with RCINTSEL1:INTSEL4 register	0x5C
24	8	Interrupt factor selected with RCINTSEL1:INTSEL5 register	0x60
25	9	Interrupt factor selected with RCINTSEL1:INTSEL6 register	0x64
26	10	Interrupt factor selected with RCINTSEL1:INTSEL7 register	0x68
27	11	MFT unit0, Wave Form Generator / DTIF(Motor Emergency Stop) / Reception Interrupt Request, Transmission Interrupt Request and Status Interrupt Request of MFS ch.8	0x6C
28	12	External Pin Interrupt Request ch.0 to ch.7	0x70
29	13	External Pin Interrupt Request ch.8 to ch.31	0x74
30	14	Dual Timer / Quad Counter (QPRC) ch.0	0x78
31	15	Reception Interrupt Request, Transmission Interrupt Request and Status Interrupt Request of MFS ch.0	0x7C

Vector No.	IRQ No.	Exception and Interrupt Factor	Vector Offset
32	16	Reception Interrupt Request, Transmission Interrupt Request and Status Interrupt Request of MFS ch.1	0x80
33	17	Reception Interrupt Request, Transmission Interrupt Request and Status Interrupt Request of MFS ch.2	0x84
34	18	Reception Interrupt Request, Transmission Interrupt Request and Status Interrupt Request of MFS ch.3	0x88
35	19	Reception Interrupt Request of MFS ch.4	0x8C
36	20	Transmission Interrupt Request and Status Interrupt Request of MFS ch.4	0x90
37	21	Reception Interrupt Request of MFS ch.5	0x94
38	22	Transmission Interrupt Request and Status Interrupt Request of MFS ch.5	0x98
39	23	PPG ch.0/2/4/8/10/12/16/18/20	0x9C
40	24	External Main OSC / External Sub OSC / Main PLL / PLL for USB/ Watch Counter/Real Time Counter	0xA0
41	25	A/D Converter unit0 / Reception Interrupt Request, Transmission Interrupt Request and Status Interrupt Request of MFS ch.9	0xA4
42	26	A/D Converter unit1 / Reception Interrupt Request, Transmission Interrupt Request and Status Interrupt Request of MFS ch.10	0xA8
43	27	A/D Converter unit2 / LCD Controller / Reception Interrupt Request, Transmission Interrupt Request and Status Interrupt Request of MFS ch.11	0xAC
44	28	MFT unit0, Free-run Timer / Input Capture / Output Compare	0xB0
45	29	MFT unit1, Free-run Timer / Input Capture / Output Compare	0xB4
46	30	MFT unit2, Free-run Timer / Input Capture / Output Compare	0xB8
47	31	Base Timer ch.0 to ch.7	0xBC
48	32	CAN ch.0/Ethernet ch.0 / Reception Interrupt Request, Transmission Interrupt Request and Status Interrupt Request of MFS ch.12	0xC0
49	33	CAN ch.1/Ethernet ch.1 / Reception Interrupt Request, Transmission Interrupt Request and Status Interrupt Request of MFS ch.13	0xC4
50	34	USB ch.0 Device (DRQ of End Point 1 to 5) *	0xC8
51	35	USB ch.0 Device (DRQI and DRQO of End Point 0, and each status) / USB ch.0 HOST (each status) *	0xCC
52	36	USB ch.1 Device (DRQ of End Point 1 to 5) * / HDMI-CEC, Remote Controller Reception ch.0	0xD0
53	37	USB ch.1 Device (DRQI and DRQO of End Point 0, and each status) / USB ch.1 HOST (each status) * / HDMI-CEC, Remote Controller Reception ch.1	0xD4
54	38	DMA Controller (DMAC) ch.0 to ch.7	0xD8
55	39	MFT unit1, Wave Form Generator / DTIF(Motor Emergency Stop) / Reception Interrupt Request, Transmission Interrupt Request and Status Interrupt Request of MFS ch.14	0xDC

Vector No.	IRQ No.	Exception and Interrupt Factor	Vector Offset
56	40	MFT unit2, Wave Form Generator / DTIF(Motor Emergency Stop) / Reception Interrupt Request, Transmission Interrupt Request and Status Interrupt Request of MFS ch.15	0xE0
57	41	Quad Counter (QPRC) ch.1	0xE4
58	42	Reception Interrupt Request of MFS ch.6	0xE8
59	43	Transmission Interrupt Request and Status Interrupt Request of MFS ch.6	0xEC
60	44	Reception Interrupt Request of MFS ch.7	0xF0
61	45	Transmission Interrupt Request and Status Interrupt Request of MFS ch.7	0xF4
62	46	Base Timer ch.8 to ch.15	0xF8
63	47	Quad Counter (QPRC) ch.2 / Flash RDY, HANG Interrupt	0xFC

*: USB Interrupt Factor

Vector No.	IRQ No.	USB Interrupt Factor	Flags
50	34	USB ch.0 Device (DRQ of End Point 1 to 5)	DRQ (End Point 1 to 5)
51	35	USB ch.0 Device (DRQI of End Point 0, DRQO and each status)	DRQI, DRQO, SPK, SUSP, SOF, BRST, CONF, WKUP
		USB ch.0 HOST (each status)	DIRQ, URIRQ, RWKIRQ, CNNIRQ, SOFIRQ, CMPIRQ
52	36	USB ch.1 Device (DRQ of End Point 1 to 5)	DRQ (End Point 1 to 5)
53	37	USB ch.1 Device (DRQI of End Point 0, DRQO and each status)	DRQI, DRQO, SPK, SUSP, SOF, BRST, CONF, WKUP
		USB ch.1 HOST (each status)	DIRQ, URIRQ, RWKIRQ, CNNIRQ, SOFIRQ, CMPIRQ

The priorities of the exceptions for vectors No. 4 to No.15 can be configured using the System Handler Priority Registers (address 0xE000ED18, 0xE000ED1C, 0xE000ED20) built into the NVIC. The priorities of the peripheral interrupts for vectors No. 16 and after can be configured using the IRQ Priority Registers (address 0xE000E400 to 0xE000E42C) built into the NVIC.

The sources of the interrupts for vectors No. 2 and No. 16 to No. 63 can be checked using the batch read register. See "Chapter 8: Nested Vectored Interrupt Controller" in the "Cortex-M3 Technical Reference Manual" for details on the other exceptions and interrupts.

Furthermore, for the interrupts of vectors No. 2 and No. 16 to No. 63, the sources that are batch read may be a signal that multiple interrupt factors are logical OR'ed within each of the peripheral macros. See the descriptions of each of the peripheral resource interrupts for details.

4. Registers

This section explains the DMA transfer request selection register and the interrupt request batch read register.

■DMA transfer request selection register and interrupt request batch read register list

Register Abbreviation	Register Name	Reference
DRQSEL	DMA Request Selection Register	4.1
EXC02MON	EXC02 Batch Read Register	4.2
IRQ00MON	IRQ00 Batch Read Register	4.3
IRQ01MON	IRQ01 Batch Read Register	4.4
IRQ02MON	IRQ02 Batch Read Register	4.5
IRQ03MON	IRQ03 Batch Read Register	4.6
IRQ04MON	IRQ04 Batch Read Register	
IRQ05MON	IRQ05 Batch Read Register	
IRQ06MON	IRQ06 Batch Read Register	
IRQ07MON	IRQ07 Batch Read Register	
IRQ08MON	IRQ08 Batch Read Register	
IRQ09MON	IRQ09 Batch Read Register	
IRQ10MON	IRQ10 Batch Read Register	
IRQ11MON	IRQ11 Batch Read Register	4.7
IRQ12MON	IRQ12 Batch Read Register	4.8
IRQ13MON	IRQ13 Batch Read Register	4.9
IRQ14MON	IRQ14 Batch Read Register	4.10
IRQ15MON	IRQ15 Batch Read Register	4.11
IRQ16MON	IRQ16 Batch Read Register	
IRQ17MON	IRQ17 Batch Read Register	
IRQ18MON	IRQ18 Batch Read Register	
IRQ19MON	IRQ19 Batch Read Register	4.12
IRQ20MON	IRQ20 Batch Read Register	4.13
IRQ21MON	IRQ21 Batch Read Register	4.12
IRQ22MON	IRQ22 Batch Read Register	4.13
IRQ23MON	IRQ23 Batch Read Register	4.14

Register Abbreviation	Register Name	Reference
IRQ24MON	IRQ24 Batch Read Register	4.15
IRQ25MON	IRQ25 Batch Read Register	4.16
IRQ26MON	IRQ26 Batch Read Register	
IRQ27MON	IRQ27 Batch Read Register	4.17
IRQ28MON	IRQ28 Batch Read Register	4.18
IRQ29MON	IRQ29 Batch Read Register	
IRQ30MON	IRQ30 Batch Read Register	
IRQ31MON	IRQ31 Batch Read Register	4.19
IRQ32MON	IRQ32 Batch Read Register	4.20
IRQ33MON	IRQ33 Batch Read Register	4.21
IRQ34MON	IRQ34 Batch Read Register	4.22
IRQ35MON	IRQ35 Batch Read Register	4.23
IRQ36MON	IRQ36 Batch Read Register	4.24
IRQ37MON	IRQ37 Batch Read Register	4.25
IRQ38MON	IRQ38 Batch Read Register	4.26
IRQ39MON	IRQ39 Batch Read Register	4.7
IRQ40MON	IRQ40 Batch Read Register	
IRQ41MON	IRQ41 Batch Read Register	4.27
IRQ42MON	IRQ42 Batch Read Register	4.12
IRQ43MON	IRQ43 Batch Read Register	4.13
IRQ44MON	IRQ44 Batch Read Register	4.12
IRQ45MON	IRQ45 Batch Read Register	4.13
IRQ46MON	IRQ46 Batch Read Register	4.28
IRQ47MON	IRQ47 Batch Read Register	4.29
ODDPKS	USB ch.0 Odd Packet Size DMA Enable Register	4.30
IRQCMODE	Interrupt Factor Vector Relocate Setting Register	4.31
RCINTSEL0	Interrupt Factor Selection Register 0	4.32
RCINTSEL1	Interrupt Factor Selection Register 1	4.33

See "Chapter 8: Nested Vectored Interrupt Controller" in the "Cortex-M3 Technical Reference Manual" for details on the registers in the NVIC.

4.1. DMA Request Selection Register (DRQSEL)

The DMA Request Selection Register (DRQSEL) selects whether interrupt signals that can start DMA transfers are output as interrupt requests to the CPU or output as transfer requests to the DMAC.

bit	31	0
Field	DRQSEL [31:0]	
Attribute	R/W	
Initial value	0x00000000	

[bit31:0] DRQSEL :

bit No.	Value	Description
31	0	The interrupt signal of the external interrupt ch.3 is output as an interrupt request to the CPU.
	1	The interrupt signal of the external interrupt ch.3 is output as a transfer request to the DMAC.
30	0	The interrupt signal of the external interrupt ch.2 is output as an interrupt request to the CPU.
	1	The interrupt signal of the external interrupt ch.2 is output as a transfer request to the DMAC.
29	0	The interrupt signal of the external interrupt ch.1 is output as an interrupt request to the CPU.
	1	The interrupt signal of the external interrupt ch.1 is output as a transfer request to the DMAC.
28	0	The interrupt signal of the external interrupt ch.0 is output as an interrupt request to the CPU.
	1	The interrupt signal of the external interrupt ch.0 is output as a transfer request to the DMAC.
27	0	The transmission interrupt signal of the MFS ch.7 is output as an interrupt request to the CPU.
	1	The transmission interrupt signal of the MFS ch.7 is output as a transfer request to the DMAC.
26	0	The reception interrupt signal of the MFS ch.7 is output as an interrupt request to the CPU.
	1	The reception interrupt signal of the MFS ch.7 is output as a transfer request to the DMAC.
25	0	The transmission interrupt signal of the MFS ch.6 is output as an interrupt request to the CPU.
	1	The transmission interrupt signal of the MFS ch.6 is output as a transfer request to the DMAC.
24	0	The reception interrupt signal of the MFS ch.6 is output as an interrupt request to the CPU.
	1	The reception interrupt signal of the MFS ch.6 is output as a transfer request to the DMAC.
23	0	The transmission interrupt signal of the MFS ch.5 is output as an interrupt request to the CPU.
	1	The transmission interrupt signal of the MFS ch.5 is output as a transfer request to the DMAC.
22	0	The reception interrupt signal of the MFS ch.5 is output as an interrupt request to the CPU.
	1	The reception interrupt signal of the MFS ch.5 is output as a transfer request to the DMAC.
21	0	The transmission interrupt signal of the MFS ch.4 is output as an interrupt request to the CPU.
	1	The transmission interrupt signal of the MFS ch.4 is output as a transfer request to the DMAC.
20	0	The reception interrupt signal of the MFS ch.4 is output as an interrupt request to the CPU.
	1	The reception interrupt signal of the MFS ch.4 is output as a transfer request to the DMAC.
19	0	The transmission interrupt signal of the MFS ch.3 is output as an interrupt request to the CPU.
	1	The transmission interrupt signal of the MFS ch.3 is output as a transfer request to the DMAC.

bit No.	Value	Description
18	0	The reception interrupt signal of the MFS ch.3 is output as an interrupt request to the CPU.
	1	The reception interrupt signal of the MFS ch.3 is output as a transfer request to the DMAC.
17	0	The transmission interrupt signal of the MFS ch.2 is output as an interrupt request to the CPU.
	1	The transmission interrupt signal of the MFS ch.2 is output as a transfer request to the DMAC.
16	0	The reception interrupt signal of the MFS ch.2 is output as an interrupt request to the CPU.
	1	The reception interrupt signal of the MFS ch.2 is output as a transfer request to the DMAC.
15	0	The transmission interrupt signal of the MFS ch.1 is output as an interrupt request to the CPU.
	1	The transmission interrupt signal of the MFS ch.1 is output as a transfer request to the DMAC.
14	0	The reception interrupt signal of the MFS ch.1 is output as an interrupt request to the CPU.
	1	The reception interrupt signal of the MFS ch.1 is output as a transfer request to the DMAC.
13	0	The transmission interrupt signal of the MFS ch.0 is output as an interrupt request to the CPU.
	1	The transmission interrupt signal of the MFS ch.0 is output as a transfer request to the DMAC.
12	0	The reception interrupt signal of the MFS ch.0 is output as an interrupt request to the CPU.
	1	The reception interrupt signal of the MFS ch.0 is output as a transfer request to the DMAC.
11	0	The IRQ 0 interrupt signal of the base timer ch.6 is output as an interrupt request to the CPU.
	1	The IRQ 0 interrupt signal of the base timer ch.6 is output as a transfer request to the DMAC.
10	0	The IRQ 0 interrupt signal of the base timer ch.4 is output as an interrupt request to the CPU.
	1	The IRQ 0 interrupt signal of the base timer ch.4 is output as a transfer request to the DMAC.
9	0	The IRQ 0 interrupt signal of the base timer ch.2 is output as an interrupt request to the CPU.
	1	The IRQ 0 interrupt signal of the base timer ch.2 is output as a transfer request to the DMAC.
8	0	The IRQ 0 interrupt signal of the base timer ch.0 is output as an interrupt request to the CPU.
	1	The IRQ 0 interrupt signal of the base timer ch.0 is output as a transfer request to the DMAC.
7	0	The scan conversion interrupt signal of the A/D converter unit 2 is output as an interrupt request to the CPU.
	1	The scan conversion interrupt signal of the A/D converter unit 2 is output as a transfer request to the DMAC.
6	0	The scan conversion interrupt signal of the A/D converter unit 1 is output as an interrupt request to the CPU.
	1	The scan conversion interrupt signal of the A/D converter unit 1 is output as a transfer request to the DMAC.
5	0	The scan conversion interrupt signal of the A/D converter unit 0 is output as an interrupt request to the CPU.
	1	The scan conversion interrupt signal of the A/D converter unit 0 is output as a transfer request to the DMAC.
4	0	The EP5 DRQ interrupt signal of the USB ch.0 is output as an interrupt request to the CPU.
	1	The EP5 DRQ interrupt signal of the USB ch.0 is output as a transfer request to the DMAC.
3	0	The EP4 DRQ interrupt signal of the USB ch.0 is output as an interrupt request to the CPU.
	1	The EP4 DRQ interrupt signal of the USB ch.0 is output as a transfer request to the DMAC.
2	0	The EP3 DRQ interrupt signal of the USB ch.0 is output as an interrupt request to the CPU.
	1	The EP3 DRQ interrupt signal of the USB ch.0 is output as a transfer request to the DMAC.

bit No.	Value	Description
1	0	The EP2 DRQ interrupt signal of the USB ch.0 is output as an interrupt request to the CPU.
	1	The EP2 DRQ interrupt signal of the USB ch.0 is output as a transfer request to the DMAC.
0	0	The EP1 DRQ interrupt signal of the USB ch.0 is output as an interrupt request to the CPU.
	1	The EP1 DRQ interrupt signal of the USB ch.0 is output as a transfer request to the DMAC.

MFS: Multi-Function Serial Interface

<Notes>

- If interrupt signal is selected as a transfer request to DMAC, the read bit value of the appropriate interrupt request batch read register (IRQxxMON, xx = 00 to 47) becomes "0" regardless of the interrupt occurrence.
- When changing the DRQSEL settings, clear the interrupt request signals from appropriate peripherals before making the change.
- DMA transfers cannot be started from hardware for interrupt signals not specified in the DRQSEL settings.

4.2. EXC02 Batch Read Register (EXC02MON)

EXC02MON can batch-read the interrupt requests allocated to interrupt vector No. 2.

bit	31															16
Field	Reserved															
Attribute	R															
Initial value	0x0000															

bit	15	14	13	12	11	10	9	8	7	6	5	4	3	2	1	0
Field	Reserved														HWINT	NMI
Attribute	R														R	R
Initial value	00000000000000														0	0

[bit31:2] Reserved: Reserved bits

Reads out "0".

[bit1] HWINT:

Value	Description
0	No hardware watchdog timer interrupt request
1	Hardware watchdog timer interrupt request

[bit0] NMI:

Value	Description
0	No external NMIX pin interrupt request
1	External NMIX pin interrupt request

4.3. IRQ00 Batch Read Register (IRQ00MON)

IRQ00MON can batch-read the interrupt requests allocated to interrupt vector No. 16.

bit	31															16
Field	Reserved															
Attribute	R															
Initial value	0x0000															

bit	15	14	13	12	11	10	9	8	7	6	5	4	3	2	1	0
Field	Reserved															FCSINT
Attribute	R															R
Initial value	000000000000000															0

[bit31:1] Reserved: Reserved bits

Reads out "0".

[bit0] FCSINT:

Value	Description
0	No interrupt request by anomalous frequency detection with CSV
1	Interrupt request by anomalous frequency detection with CSV

4.4. IRQ01 Batch Read Register (IRQ01MON)

IRQ01MON can batch-read the interrupt requests allocated to interrupt vector No. 17.

bit	31															16
Field	Reserved															
Attribute	R															
Initial value	0x0000															

bit	15	14	13	12	11	10	9	8	7	6	5	4	3	2	1	0
Field	Reserved															SWWDTINT
Attribute	R															R
Initial value	000000000000000															0

[bit31:1] Reserved: Reserved bits

Reads out "0".

[bit0] SWWDTINT:

Value	Description
0	No software watchdog timer interrupt request
1	Software watchdog timer interrupt request

4.5. IRQ02 Batch Read Register (IRQ02MON)

IRQ02MON can batch-read the interrupt requests allocated to interrupt vector No. 18.

bit	31															16
Field	Reserved															
Attribute	R															
Initial value	0x0000															

bit	15	14	13	12	11	10	9	8	7	6	5	4	3	2	1	0
Field	Reserved															LVDINT
Attribute	R															R
Initial value	000000000000000															0

[bit31:1] Reserved: Reserved bits

Reads out "0".

[bit0] LVDINT:

Value	Description
0	No low voltage detection (LVD) interrupt request
1	Low voltage detection (LVD) interrupt request

4.6. IRQ03 to IRQ10 Batch Read Register (IRQ03MON to IRQ10MON)

IRQ03MON can read the interrupt requests allocated to interrupt vector No. 19.
IRQ04MON can read the interrupt requests allocated to interrupt vector No. 20.
IRQ05MON can read the interrupt requests allocated to interrupt vector No. 21.
IRQ06MON can read the interrupt requests allocated to interrupt vector No. 22.
IRQ07MON can read the interrupt requests allocated to interrupt vector No. 23.
IRQ08MON can read the interrupt requests allocated to interrupt vector No. 24.
IRQ09MON can read the interrupt requests allocated to interrupt vector No. 25.
IRQ10MON can read the interrupt requests allocated to interrupt vector No. 26.

IRQ03MON shows the status of the interrupt requests selected with RCINTSEL0:INTSEL0.
IRQ04MON shows the status of the interrupt requests selected with RCINTSEL0:INTSEL1.
IRQ05MON shows the status of the interrupt requests selected with RCINTSEL0:INTSEL2.
IRQ06MON shows the status of the interrupt requests selected with RCINTSEL0:INTSEL3.
IRQ07MON shows the status of the interrupt requests selected with RCINTSEL1:INTSEL4.
IRQ08MON shows the status of the interrupt requests selected with RCINTSEL1:INTSEL5.
IRQ09MON shows the status of the interrupt requests selected with RCINTSEL1:INTSEL6.
IRQ10MON shows the status of the interrupt requests selected with RCINTSEL1:INTSEL7.

bit	31															16
Field	Reserved															
Attribute	R															
Initial value	0x0000															

bit	15	14	13	12	11	10	9	8	7	6	5	4	3	2	1	0
Field	Reserved															RCINT
Attribute	R															R
Initial value	000000000000000															0

[bit31:1] Reserved: Reserved bits

Reads out "0".

[bit0] RCINT:

Value	Description
0	No interrupt request selected with relevant RCINTSEL0:INTSELx/RCINTSEL1:INTSELx
1	Interrupt request selected with relevant RCINTSEL0:NTSELx/RCINTSEL1:INTSELx*

*: If the base timer is selected as the interrupt factor, this bit is set to "1" with ether of two signals, IRQ0 or IRQ1.

4.7. IRQ11/39/40 Batch Read Register (IRQxxMON)

IRQ11MON can batch-read the interrupt requests allocated to interrupt vector No. 27.
IRQ39MON can batch-read the interrupt requests allocated to interrupt vector No. 55.
IRQ40MON can batch-read the interrupt requests allocated to interrupt vector No. 56.

IRQ11MON shows the status of the interrupt requests from MFT unit0 WFG timer, DTIF, and MFS ch.8.
IRQ39MON shows the status of the interrupt requests from MFT unit1 WFG timer, DTIF, and MFS ch.14.
IRQ40MON shows the status of the interrupt requests from MFT unit2 WFG timer, DTIF, and MFS ch.15.

bit	31															16
Field	Reserved															
Attribute	R															
Initial value	0x0000															

bit	15	14	13	12	11	10	9	8	7	6	5	4	3	2	1	0
Field	Reserved									MFSINT			WAVEINT			
Attribute	R									R			R			
Initial value	000000000									000			0000			

[bit31:7] Reserved: Reserved bits
Reads out "0".

[bit6:4] MFSINT:

bit No.	Value	Description
6	0	No status interrupt request on the corresponding MFS channel
	1	Status interrupt request on the corresponding MFS channel
5	0	No transmission interrupt request on the corresponding MFS channel
	1	Transmission interrupt request on the corresponding MFS channel
4	0	No reception interrupt request on the corresponding MFS channel
	1	Reception interrupt request on the corresponding MFS channel

[bit3:0] WAVEINT:

bit No.	Value	Description
3	0	No interrupt request on WFG timer 54 in the corresponding MFT unit
	1	Interrupt request on WFG timer 54 in the corresponding MFT unit
2	0	No interrupt request on WFG timer 32 in the corresponding MFT unit
	1	Interrupt request on WFG timer 32 in the corresponding MFT unit
1	0	No interrupt request on WFG timer 10 in the corresponding MFT unit
	1	Interrupt request on WFG timer 10 in the corresponding MFT unit
0	0	No interrupt request on DTIF(Motor emergency stop) in the
	1	Interrupt request on DTIF(Motor emergency stop) in the corresponding

4.8. IRQ12 Batch Read Register (IRQ12MON)

IRQ12MON can batch-read the interrupt requests allocated to interrupt vector No. 28.

IRQ12MON shows the status of the interrupt requests on the external interrupt from ch.0 to ch.7.

bit	31															16
Field	Reserved															
Attribute	R															
Initial value	0x0000															

bit	15	14	13	12	11	10	9	8	7	6	5	4	3	2	1	0
Field	Reserved								EXTINT							
Attribute	R								R							
Initial value	0x00								0x00							

[bit31:8] Reserved: Reserved bits

Reads out "0".

[bit7:0] EXTINT:

bit No.	Value	Description
7	0	No interrupt request on external interrupt ch.7
	1	Interrupt request on external interrupt ch.7
6	0	No interrupt request on external interrupt ch.6
	1	Interrupt request on external interrupt ch.6
5	0	No interrupt request on external interrupt ch.5
	1	Interrupt request on external interrupt ch.5
4	0	No interrupt request on external interrupt ch.4
	1	Interrupt request on external interrupt ch.4
3	0	No interrupt request on external interrupt ch.3
	1	Interrupt request on external interrupt ch.3
2	0	No interrupt request on external interrupt ch.2
	1	Interrupt request on external interrupt ch.2
1	0	No interrupt request on external interrupt ch.1
	1	Interrupt request on external interrupt ch.1
0	0	No interrupt request on external interrupt ch.0
	1	Interrupt request on external interrupt ch.0

If DMA transfer requests are selected by the DRQSEL register, the corresponding EXTINT bit becomes "0".

4.9. IRQ13 Batch Read Register (IRQ13MON)

IRQ13MON can batch-read the interrupt requests allocated to interrupt vector No. 29.

IRQ13MON shows the status of the interrupt requests on the external interrupt from ch.8 to ch.31.

bit	31	30	29	28	27	26	25	24	23	22	21	20	19	18	17	16
Field	Reserved								EXTINT							
Attribute	R								R							
Initial value	0x00								0x00							

bit	15	14	13	12	11	10	9	8	7	6	5	4	3	2	1	0
Field	EXTINT															
Attribute	R															
Initial value	0x0000															

[bit31:24] Reserved: Reserved bits

Reads out "0".

[bit23:0] EXTINT:

bit No.	Value	Description
23	0	No interrupt request on external interrupt ch.31
	1	Interrupt request on external interrupt ch.31
22	0	No interrupt request on external interrupt ch.30
	1	Interrupt request on external interrupt ch.30
21	0	No interrupt request on external interrupt ch.29
	1	Interrupt request on external interrupt ch.29
20	0	No interrupt request on external interrupt ch.28
	1	Interrupt request on external interrupt ch.28
19	0	No interrupt request on external interrupt ch.27
	1	Interrupt request on external interrupt ch.27
18	0	No interrupt request on external interrupt ch.26
	1	Interrupt request on external interrupt ch.26
17	0	No interrupt request on external interrupt ch.25
	1	Interrupt request on external interrupt ch.25
16	0	No interrupt request on external interrupt ch.24
	1	Interrupt request on external interrupt ch.24
15	0	No interrupt request on external interrupt ch.23
	1	Interrupt request on external interrupt ch.23
14	0	No interrupt request on external interrupt ch.22

bit No.	Value	Description
	1	Interrupt request on external interrupt ch.22
13	0	No interrupt request on external interrupt ch.21
	1	Interrupt request on external interrupt ch.21
12	0	No interrupt request on external interrupt ch.20
	1	Interrupt request on external interrupt ch.20
11	0	No interrupt request on external interrupt ch.19
	1	Interrupt request on external interrupt ch.19
10	0	No interrupt request on external interrupt ch.18
	1	Interrupt request on external interrupt ch.18
9	0	No interrupt request on external interrupt ch.17
	1	Interrupt request on external interrupt ch.17
8	0	No interrupt request on external interrupt ch.16
	1	Interrupt request on external interrupt ch.16
7	0	No interrupt request on external interrupt ch.15
	1	Interrupt request on external interrupt ch.15
6	0	No interrupt request on external interrupt ch.14
	1	Interrupt request on external interrupt ch.14
5	0	No interrupt request on external interrupt ch.13
	1	Interrupt request on external interrupt ch.13
4	0	No interrupt request on external interrupt ch.12
	1	Interrupt request on external interrupt ch.12
3	0	No interrupt request on external interrupt ch.11
	1	Interrupt request on external interrupt ch.11
2	0	No interrupt request on external interrupt ch.10
	1	Interrupt request on external interrupt ch.10
1	0	No interrupt request on external interrupt ch.9
	1	Interrupt request on external interrupt ch.9
0	0	No interrupt request on external interrupt ch.8
	1	Interrupt request on external interrupt ch.8

4.10. IRQ14 Batch Read Register (IRQ14MON)

IRQ14MON can batch-read the interrupt requests allocated to interrupt vector No. 30.

bit	31															16
Field	Reserved															
Attribute	R															
Initial value	0x0000															

bit	15	14	13	12	11	10	9	8	7	6	5	4	3	2	1	0
Field	Reserved								QUDINT						TIMINT	
Attribute	R								R						R	
Initial value	0x00								000000						00	

[bit31:8] Reserved: Reserved bits

Reads out "0".

[bit7:2] QUDINT:

bit No.	Value	Description
7	0	No PC match & RC match interrupt request on QPRC ch.0
	1	PC match & RC match interrupt request on QPRC ch.0
6	0	No interrupt request detected RC out of range on QPRC ch.0
	1	Interrupt request detected RC out of range on QPRC ch.0
5	0	No PC count invert interrupt request on QPRC ch.0
	1	PC count invert interrupt request on QPRC ch.0
4	0	No overflow/underflow/zero index interrupt request on QPRC ch.0
	1	Overflow/underflow/zero index interrupt request on QPRC ch.0
3	0	No PC&RC match interrupt request on QPRC ch.0
	1	PC&RC match interrupt request on QPRC ch.0
2	0	No PC match interrupt request on QPRC ch.0
	1	PC match interrupt request on QPRC ch.0

[bit1:0] TIMINT:

bit No.	Value	Description
1	0	No dual timer TIMINT2 interrupt request
	1	Dual timer TIMINT2 interrupt request
0	0	No dual timer TIMINT1 interrupt request
	1	Dual timer TIMINT1 interrupt request

4.11. IRQ15/16/17/18 Batch Read Register (IRQxxMON)

IRQ15MON can batch-read the interrupt requests allocated to interrupt vector No. 31.
IRQ16MON can batch-read the interrupt requests allocated to interrupt vector No. 32.
IRQ17MON can batch-read the interrupt requests allocated to interrupt vector No. 33.
IRQ18MON can batch-read the interrupt requests allocated to interrupt vector No. 34.

IRQ15MON shows the status of the reception interrupt request, transmission interrupt request, status interrupt request on MFS ch.0.
IRQ16MON shows the status of the reception interrupt request, transmission interrupt request, status interrupt request on MFS ch.1.
IRQ17MON shows the status of the reception interrupt request, transmission interrupt request, status interrupt request on MFS ch.2.
IRQ18MON shows the status of the reception interrupt request, transmission interrupt request, status interrupt request on MFS ch.3.

bit	31															16
Field	Reserved															
Attribute	R															
Initial value	0x0000															

bit	15	14	13	12	11	10	9	8	7	6	5	4	3	2	1	0
Field	Reserved													MFSINT		
Attribute	R													R		
Initial value	0000000000000													000		

[bit31:3] Reserved: Reserved bits

Reads out "0".

[bit2:0] MFSINT:

bit No.	Value	Description
2	0	No status interrupt request on the corresponding MFS channel
	1	Status interrupt request on the corresponding MFS channel
1	0	No transmission interrupt request on the corresponding MFS channel
	1	Transmission interrupt request on the corresponding MFS channel
0	0	No reception interrupt request on the corresponding MFS channel
	1	Reception interrupt request on the corresponding MFS channel

If DMA transfer requests are selected by the DRQSEL register, the corresponding MFSINT bit is "0".

4.12. IRQ19/21/42/44 Batch Read Register (IRQxxMON)

IRQ19MON can batch-read the interrupt requests allocated to interrupt vector No. 35.
IRQ21MON can batch-read the interrupt requests allocated to interrupt vector No. 37.
IRQ42MON can batch-read the interrupt requests allocated to interrupt vector No. 58.
IRQ44MON can batch-read the interrupt requests allocated to interrupt vector No. 60.

IRQ19MON shows the status of the reception interrupt request on MFS ch.4.
IRQ21MON shows the status of the reception interrupt request on MFS ch.5.
IRQ42MON shows the status of the reception interrupt request on MFS ch.6.
IRQ44MON shows the status of the reception interrupt request on MFS ch.7.

bit	31															16
Field	Reserved															
Attribute	R															
Initial value	0x0000															

bit	15	14	13	12	11	10	9	8	7	6	5	4	3	2	1	0
Field	Reserved															MFSINT
Attribute	R															R
Initial value	000000000000000															0

[bit31:1] Reserved: Reserved bits

Reads out "0".

[bit0] MFSINT:

Value	Description
0	No reception interrupt request on the corresponding MFS channel.
1	Reception interrupt request on the corresponding MFS channel.

If DMA transfer requests are selected by the DRQSEL register, the corresponding MFSINT bit is "0".

4.13. IRQ20/22/43/45 Batch Read Register (IRQxxMON)

IRQ20MON can batch-read the interrupt requests allocated to interrupt vector No. 36.
IRQ22MON can batch-read the interrupt requests allocated to interrupt vector No. 38.
IRQ43MON can batch-read the interrupt requests allocated to interrupt vector No. 59.
IRQ45MON can batch-read the interrupt requests allocated to interrupt vector No. 61.

IRQ20MON shows the status of the transmission interrupt request and the status interrupt request on MFS ch.4.
IRQ22MON shows the status of the transmission interrupt request and the status interrupt request on MFS ch.5.
IRQ43MON shows the status of the transmission interrupt request and the status interrupt request on MFS ch.6.
IRQ45MON shows the status of the transmission interrupt request and the status interrupt request on MFS ch.7.

bit	31															16
Field	Reserved															
Attribute	R															
Initial value	0x0000															

bit	15	14	13	12	11	10	9	8	7	6	5	4	3	2	1	0
Field	Reserved														MFSINT	
Attribute	R														R	
Initial value	00000000000000														00	

[bit31:2] Reserved: Reserved bits

Reads out "0".

[bit1:0] MFSINT:

bit No.	Value	Description
1	0	No status interrupt request on the corresponding MFS channel.
	1	Status interrupt request on the corresponding MFS channel.
0	0	No transmission interrupt request on the corresponding MFS channel.
	1	Transmission interrupt request on the corresponding MFS channel.

If DMA transfer requests are selected by the DRQSEL register, the corresponding MFSINT bit is "0".

4.14. IRQ23 Batch Read Register (IRQ23MON)

IRQ23MON can batch-read the interrupt requests allocated to interrupt vector No. 39.

IRQ23MON shows the status of the interrupt request from PPG (ch.20, ch.18, ch.16, ch.12, ch.10, ch.8, ch.4, ch.2, ch.0).

bit	31															16
Field	Reserved															
Attribute	R															
Initial value	0x0000															

bit	15	14	13	12	11	10	9	8	7	6	5	4	3	2	1	0
Field	Reserved							PPGINT								
Attribute	R							R								
Initial value	0000000							000000000								

[bit31:9] Reserved: Reserved bits

Reads out "0".

[bit8:0] PPGINT:

bit No.	Value	Description
8	0	No interrupt request on PPG ch.20
	1	Interrupt request on PPG ch.20
7	0	No interrupt request on PPG ch.18
	1	Interrupt request on PPG ch.18
6	0	No interrupt request on PPG ch.16
	1	Interrupt request on PPG ch.16
5	0	No interrupt request on PPG ch.12
	1	Interrupt request on PPG ch.12
4	0	No interrupt request on PPG ch.10
	1	Interrupt request on PPG ch.10
3	0	No interrupt request on PPG ch.8
	1	Interrupt request on PPG ch.8
2	0	No interrupt request on PPG ch.4
	1	Interrupt request on PPG ch.4
1	0	No interrupt request on PPG ch.2
	1	Interrupt request on PPG ch.2
0	0	No interrupt request on PPG ch.0
	1	Interrupt request on PPG ch.0

4.15. IRQ24 Batch Read Register (IRQ24MON)

IRQ24MON can batch-read the interrupt requests allocated to interrupt vector No. 40.

bit	31	8
Field	Reserved	
Attribute	R	
Initial value	0x000000	

bit	7	6	5	4	3	2	1	0
Field	Reserved		RTCINT	WCINT	UPLLINT	MPLLINT	SOSCINT	MOSCINT
Attribute	R		R	R	R	R	R	R
Initial value	00		0	0	0	0	0	0

[bit31:6] Reserved: Reserved bits

Reads out "0".

[bit5] RTCINT:

Value	Description
0	No RTC interrupt request
1	RTC interrupt request

[bit4] WCINT:

Value	Description
0	No watch counter interrupt request
1	Watch counter interrupt request

[bit3] UPLLINT:

Value	Description
0	No stabilization wait completion interrupt request for USB or USB/Ethernet PLL oscillation
1	Stabilization wait completion interrupt request for USB or USB/Ethernet PLL oscillation

[bit2] MPLLINT:

Value	Description
0	No stabilization wait completion interrupt request for main PLL oscillation
1	Stabilization wait completion interrupt request for main PLL oscillation

[bit1] SOSCINT:

Value	Description
0	No stabilization wait completion interrupt request for sub-clock oscillation
1	Stabilization wait completion interrupt request for sub-clock oscillation

[bit0] MOSCINT:

Value	Description
0	No stabilization wait completion interrupt request for main clock oscillation
1	Stabilization wait completion interrupt request for main clock oscillation

4.16. IRQ25/26 Batch Read Register (IRQxxMON)

IRQ25MON can batch-read the interrupt requests allocated to interrupt vector No. 41.
IRQ26MON can batch-read the interrupt requests allocated to interrupt vector No. 42.

IRQ25MON shows the status of the interrupt request in A/D converter unit 0 and MFS ch.9.
IRQ26MON shows the status of the interrupt request in A/D converter unit 1 and MFS ch.10.

bit	31															16
Field	Reserved															
Attribute	R															
Initial value	0x0000															

bit	15	14	13	12	11	10	9	8	7	6	5	4	3	2	1	0
Field	Reserved									MFSINT			ADCINT			
Attribute	R									R			R			
Initial value	000000000									000			0000			

[bit31:7] Reserved: Reserved bits

Reads out "0".

[bit6:4] MFSINT:

bit No.	Value	Description
6	0	No status interrupt request on the corresponding MFS channel
	1	Status interrupt request on the corresponding MFS channel
5	0	No transmission interrupt request on the corresponding MFS channel
	1	Transmission interrupt request on the corresponding MFS channel
4	0	No reception interrupt request on the corresponding MFS channel
	1	Reception interrupt request on the corresponding MFS channel

[bit3:0] ADCINT:

bit No.	Value	Description
3	0	No conversion result comparison interrupt request in the corresponding A/D converter unit.
	1	Conversion result comparison interrupt request in the corresponding A/D converter unit.
2	0	No FIFO overrun interrupt request in the corresponding A/D converter unit.
	1	FIFO overrun interrupt request in the corresponding A/D converter unit.
1	0	No scan conversion interrupt request in the corresponding A/D converter unit.
	1	Scan conversion interrupt request in the corresponding A/D converter unit.
0	0	No priority conversion interrupt request in the corresponding A/D converter unit.
	1	Priority conversion interrupt request in the corresponding A/D converter unit.

If DMA transfer requests are selected by the DRQSEL register, the corresponding ADCINT bit is "0".

4.17. IRQ27 Batch Read Register (IRQ27MON)

IRQ27MON can batch-read the interrupt requests allocated to interrupt factor vector No. 43.

IRQ27MON shows the status of the interrupt request in A/D converter unit 2, LCD controller, and MFS ch.11.

bit	31															16
Field	Reserved															
Attribute	R															
Initial value	0x0000															

bit	15							8	7		5	4	3			0
Field	Reserved								MFSINT			LCDCINT	ADCINT			
Attribute	R								R			R	R			
Initial value	00000000								000			0	0000			

[bit31:8] Reserved: Reserved bits

Reads out "0".

[bit7:5] MFSINT:

bit No.	Value	Description
7	0	No status interrupt request on the corresponding MFS ch.11
	1	Status interrupt request on the corresponding MFS ch.11
6	0	No transmission interrupt request on the corresponding MFS ch.11
	1	Transmission interrupt request on the corresponding MFS ch.11
5	0	No reception interrupt request on the corresponding MFS ch.11
	1	Reception interrupt request on the corresponding MFS ch.11

[bit4] LCDCINT:

Value	Description
0	No interrupt request for LCD controller
1	Interrupt request for LCD controller

[bit3:0] ADCINT:

bit No.	Value	Description
3	0	No conversion result comparison interrupt request in the A/D converter unit2.
	1	Conversion result comparison interrupt request in the A/D converter unit2.
2	0	No FIFO overrun interrupt request in the A/D converter unit2.
	1	FIFO overrun interrupt request in the A/D converter unit2.
1	0	No scan conversion interrupt request in the A/D converter unit2.
	1	Scan conversion interrupt request in the A/D converter unit2.
0	0	No priority conversion interrupt request in the A/D converter unit2.
	1	Priority conversion interrupt request in the A/D converter unit2.

If DMA transfer requests are selected by the DRQSEL register, the corresponding ADCINT bit is "0".

4.18. IRQ28/29/30 Batch Read Register (IRQxxMON)

IRQ28MON can batch-read the interrupt requests allocated to interrupt vector No. 44.
IRQ29MON can batch-read the interrupt requests allocated to interrupt vector No. 45.
IRQ30MON can batch-read the interrupt requests allocated to interrupt vector No. 46.

IRQ28MON shows the status of the interrupt request in MFT unit 0.
IRQ29MON shows the status of the interrupt request in MFT unit 1.
IRQ30MON shows the status of the interrupt request in MFT unit 2.

bit	31															16
Field	Reserved															
Attribute	R															
Initial value	0x0000															

bit	15	14	13	12	11	10	9	8	7	6	5	4	3	2	1	0
Field	OCUINT						ICUINT				FRTINT					
Attribute	R						R				R					
Initial value	000000						0000				000000					

[bit31:16] Reserved: Reserved bits

Reads out "0".

[bit15:10] OCUINT:

bit No.	Value	Description
15	0	No interrupt request on the output compare ch.5 in the corresponding MFT unit
	1	Interrupt request on the output compare ch.5 in the corresponding MFT unit
14	0	No interrupt request on the output compare ch.4 in the corresponding MFT unit
	1	Interrupt request on the output compare ch.4 in the corresponding MFT unit
13	0	No interrupt request on the output compare ch.3 in the corresponding MFT unit
	1	Interrupt request on the output compare ch.3 in the corresponding MFT unit
12	0	No interrupt request on the output compare ch.2 in the corresponding MFT unit
	1	Interrupt request on the output compare ch.2 in the corresponding MFT unit
11	0	No interrupt request on the output compare ch.1 in the corresponding MFT unit
	1	Interrupt request on the output compare ch.1 in the corresponding MFT unit
10	0	No interrupt request on the output compare ch.0 in the corresponding MFT unit
	1	Interrupt request on the output compare ch.0 in the corresponding MFT unit

[bit9:6] ICUINT:

bit No.	Value	Description
9	0	No interrupt request on the input capture ch.3 in the corresponding MFT unit
	1	Interrupt request on the input capture ch.3 in the corresponding MFT unit
8	0	No interrupt request on the input capture ch.2 in the corresponding MFT unit
	1	Interrupt request on the input capture ch.2 in the corresponding MFT unit
7	0	No interrupt request on the input capture ch.1 in the corresponding MFT unit
	1	Interrupt request on the input capture ch.1 in the corresponding MFT unit
6	0	No interrupt request on the input capture ch.0 in the corresponding MFT unit
	1	Interrupt request on the input capture ch.0 in the corresponding MFT unit

[bit5:0] FRTINT:

bit No.	Value	Description
5	0	No zero detection interrupt request on the free run timer ch.2 in the corresponding MFT unit
	1	Zero detection interrupt request on the free run timer ch.2 in the corresponding MFT unit
4	0	No zero detection interrupt request on the free run timer ch.1 in the corresponding MFT unit
	1	Zero detection interrupt request on the free run timer ch.1 in the corresponding MFT unit
3	0	No zero detection interrupt request on the free run timer ch.0 in the corresponding MFT unit
	1	Zero detection interrupt request on the free run timer ch.0 in the corresponding MFT unit
2	0	No peak value detection interrupt request on the free run timer ch.2 in the corresponding MFT unit
	1	Peak value detection interrupt request on the free run timer ch.2 in the corresponding MFT unit
1	0	No peak value detection interrupt request on the free run timer ch.1 in the corresponding MFT unit
	1	Peak value detection interrupt request on the free run timer ch.1 in the corresponding MFT unit
0	0	No peak value detection interrupt request on the free run timer ch.0 in the corresponding MFT unit
	1	Peak value detection interrupt request on the free run timer ch.0 in the corresponding MFT unit

4.19. IRQ31 Batch Read Register (IRQ31MON)

IRQ31MON can batch-read the interrupt requests allocated to interrupt vector No. 47.

bit	31															16
Field	Reserved															
Attribute	R															
Initial value	0x0000															

bit	15	14	13	12	11	10	9	8	7	6	5	4	3	2	1	0
Field	BTINT															
Attribute	R															
Initial value	0x0000															

[bit31:16] Reserved: Reserved bits

Reads out "0".

[bit15:0] BTINT:

bit No.	Value	Description
15	0	No IRQ1 interrupt request on the base timer ch.7
	1	IRQ1 interrupt request on the base timer ch.7
14	0	No IRQ0 interrupt request on the base timer ch.7
	1	IRQ0 interrupt request on the base timer ch.7
13	0	No IRQ1 interrupt request on the base timer ch.6
	1	IRQ1 interrupt request on the base timer ch.6
12	0	No IRQ0 interrupt request on the base timer ch.6
	1	IRQ0 interrupt request on the base timer ch.6
11	0	No IRQ1 interrupt request on the base timer ch.5
	1	IRQ1 interrupt request on the base timer ch.5
10	0	No IRQ0 interrupt request on the base timer ch.5
	1	IRQ0 interrupt request on the base timer ch.5
9	0	No IRQ1 interrupt request on the base timer ch.4
	1	IRQ1 interrupt request on the base timer ch.4
8	0	No IRQ0 interrupt request on the base timer ch.4
	1	IRQ0 interrupt request on the base timer ch.4
7	0	No IRQ1 interrupt request on the base timer ch.3
	1	IRQ1 interrupt request on the base timer ch.3
6	0	No IRQ0 interrupt request on the base timer ch.3
	1	IRQ0 interrupt request on the base timer ch.3

bit No.	Value	Description
5	0	No IRQ1 interrupt request on the base timer ch.2
	1	IRQ1 interrupt request on the base timer ch.2
4	0	No IRQ0 interrupt request on the base timer ch.2
	1	IRQ0 interrupt request on the base timer ch.2
3	0	No IRQ1 interrupt request on the base timer ch.1
	1	IRQ1 interrupt request on the base timer ch.1
2	0	No IRQ0 interrupt request on the base timer ch.1
	1	IRQ0 interrupt request on the base timer ch.1
1	0	No IRQ1 interrupt request on the base timer ch.0
	1	IRQ1 interrupt request on the base timer ch.0
0	0	No IRQ0 interrupt request on the base timer ch.0
	1	IRQ0 interrupt request on the base timer ch.0

If DMA transfer requests are selected by the DRQSEL register, the corresponding BTINT bit is "0".

As shown in Table 4-1, base timer interrupt factors IRQ0 and IRQ1 differ depending on the base timer function to be used.

Table 4-1 Interrupt factors for each function of the base timer

Function	Interrupt Factor IRQ0	Interrupt Factor IRQ1
16-bit PWM timer	Underflow detection/ duty match detection	Timer start trigger detection
16-bit PPG timer	Underflow detection	Timer start trigger detection
16-/32-bit reload timer	Underflow detection	Timer start trigger detection
16-/32-bit PWC timer	Overflow detection	Measurement finished detection

4.20. IRQ32 Batch Read Register (IRQ32MON)

IRQ32MON can batch-read the interrupt requests allocated to interrupt vector No. 48.

IRQ32MON shows the status of the interrupt request on the CAN ch.0, Ethernet ch.0, and MFS ch.12.

bit	31	8
Field	Reserved	
Attribute	R	
Initial value	0x000000	

bit	7	6	5	4	3	2	1	0
Field	Reserved	MFSINT			MAC0LPI	MAC0PMI	MAC0SBD	CAN0INT
Attribute	R	R			R	R	R	R
Initial value	0	000			0	0	0	0

[bit31:7] Reserved: Reserved bits

Reads out "0".

[bit6:4] MFSINT:

bit No.	Value	Description
6	0	No status interrupt request on the corresponding MFS ch.12
	1	Status interrupt request on the corresponding MFS ch.12
5	0	No transmission interrupt request on the corresponding MFS ch.12
	1	Transmission interrupt request on the corresponding MFS ch.12
4	0	No reception interrupt request on the corresponding MFS ch.12
	1	Reception interrupt request on the corresponding MFS ch.12

[bit3] MAC0LPI:

Value	Description
0	No LPI interrupt request of Ethernet MAC ch.0
1	LPI interrupt request of Ethernet MAC ch.0

[bit2] MAC0PMI:

Value	Description
0	No PMI interrupt request of Ethernet MAC ch.0
1	PMI interrupt request of Ethernet MAC ch.0

[bit1] MAC0SBD:

Value	Description
0	No SBD interrupt request of Ethernet MAC ch.0
1	SBD interrupt request of Ethernet MAC ch.0

[bit0] CAN0INT:

Value	Description
0	No interrupt request of CAN ch.0
1	Interrupt request of CAN ch.0

4.21. IRQ33 Batch Read Register (IRQ33MON)

IRQ33MON can batch-read the interrupt requests allocated to interrupt vector No. 49.

IRQ33MON shows the status of the interrupt request on the CAN ch.1, Ethernet ch.1, and MFS ch.13.

bit	31							8
Field	Reserved							
Attribute	R							
Initial value	0x000000							

bit	7	6	5	4	3	2	1	0
Field	Reserved	MFSINT			Reserved	MAC1PMI	MAC1SBD	CAN1INT
Attribute	R	R			R	R	R	R
Initial value	0	000			0	0	0	0

[bit31:7] Reserved: Reserved bits
Reads out "0".

[bit6:4] MFSINT:

bit No.	Value	Description
6	0	No status interrupt request on the corresponding MFS ch.13
	1	Status interrupt request on the corresponding MFS ch.13
5	0	No transmission interrupt request on the corresponding MFS ch.13
	1	Transmission interrupt request on the corresponding MFS ch.13
4	0	No reception interrupt request on the corresponding MFS ch.13
	1	Reception interrupt request on the corresponding MFS ch.13

[bit3] Reserved: Reserved bit
Reads out "0".

[bit2] MAC1PMI:

Value	Description
0	No PMI interrupt request of Ethernet MAC ch.1
1	PMI interrupt request of Ethernet MAC ch.1

[bit1] MAC1SBD:

Value	Description
0	No SBD interrupt request of Ethernet MAC ch.1
1	SBD interrupt request of Ethernet MAC ch.1

[bit0] CAN1INT:

Value	Description
0	No interrupt request of CAN ch.1
1	Interrupt request of CAN ch.1

4.22. IRQ34 Batch Read Register (IRQ34MON)

IRQ34MON can batch-read the interrupt requests allocated to interrupt vector No. 50.

bit	31															16
Field	Reserved															
Attribute	R															
Initial value	0x0000															

bit	15	14	13	12	11	10	9	8	7	6	5	4	3	2	1	0
Field	Reserved											USB0INT				
Attribute	R											R				
Initial value	00000000000											00000				

[bit31:5] Reserved: Reserved bits

Reads out "0".

[bit4:0] USB0INT:

bit No.	Value	Description
4	0	No Endpoint5 DRQ interrupt request on the USB ch.0
	1	Endpoint5 DRQ interrupt request on the USB ch.0
3	0	No Endpoint4 DRQ interrupt request on the USB ch.0
	1	Endpoint4 DRQ interrupt request on the USB ch.0
2	0	No Endpoint3 DRQ interrupt request on the USB ch.0
	1	Endpoint3 DRQ interrupt request on the USB ch.0
1	0	No Endpoint2 DRQ interrupt request on the USB ch.0
	1	Endpoint2 DRQ interrupt request on the USB ch.0
0	0	No Endpoint1 DRQ interrupt request on the USB ch.0
	1	Endpoint1 DRQ interrupt request on the USB ch.0

If DMA transfer requests are selected by the DRQSEL register, the corresponding USB0INT bit is "0".

4.23. IRQ35 Batch Read Register (IRQ35MON)

IRQ35MON can batch-read the interrupt requests allocated to interrupt vector No. 51.

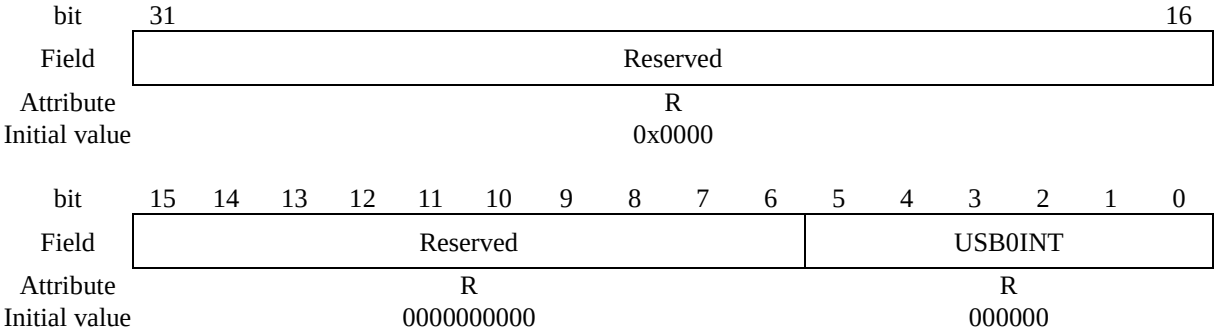

[bit31:6] Reserved: Reserved bits

Reads out "0".

[bit5:0] USB0INT:

bit No.	Value	Description
5	0	No status (SOFIRQ, CMPIRO) interrupt request on the USB ch.0
	1	Status (SOFIRQ, CMPIRO) interrupt request on the USB ch.0
4	0	No status (DIRQ, URIRQ, RWKIRQ, CNNIRQ) interrupt request on the USB ch.0
	1	Status (DIRQ, URIRQ, RWKIRQ, CNNIRQ) interrupt request on the USB ch.0
3	0	No status (SPK) interrupt request on the USB ch.0
	1	Status (SPK) interrupt request on the USB ch.0
2	0	No status (SUSP, SOF, BRST, CONF, WKUP) interrupt request on the USB ch.0
	1	Status (SUSP, SOF, BRST, CONF, WKUP) interrupt request on the USB ch.0
1	0	No Endpoint0 DRQO interrupt request on the USB ch.0
	1	Endpoint0 DRQO interrupt request on the USB ch.0
0	0	No Endpoint0 DRQI interrupt request on the USB ch.0
	1	Endpoint0 DRQI interrupt request on the USB ch.0

4.24. IRQ36 Batch Read Register (IRQ36MON)

IRQ36MON can batch-read the interrupt requests allocated to interrupt vector No. 52.

bit	31	16
Field	Reserved	
Attribute	R	
Initial value	0x0000	

bit	15	6	5	4	3	2	1	0
Field	Reserved		RCEC0INT	USB1INT				
Attribute	R		R	R				
Initial value	0000000000		0	00000				

[bit31:6] Reserved: Reserved bits

Reads out "0".

[bit5] RCEC0INT:

Value	Description
0	No interrupt request for HDMI-CEC/Remote Control Reception ch.0
1	Interrupt request for HDMI-CEC/Remote Control Reception ch.0

[bit4:0] USB1INT:

bit No.	Value	Description
4	0	No interrupt request of USB ch.1 Endpoint5 DRQ
	1	Interrupt request of USB ch.1 Endpoint5 DRQ
3	0	No interrupt request of USB ch.1 Endpoint4 DRQ
	1	Interrupt request of USB ch.1 Endpoint4 DRQ
2	0	No interrupt request of USB ch.1 Endpoint3 DRQ
	1	Interrupt request of USB ch.1 Endpoint3 DRQ
1	0	No interrupt request of USB ch.1 Endpoint2 DRQ
	1	Interrupt request of USB ch.1 Endpoint2 DRQ
0	0	No interrupt request of USB ch.1 Endpoint1 DRQ
	1	Interrupt request of USB ch.1 Endpoint1 DRQ

4.25. IRQ37 Batch Read Register (IRQ37MON)

IRQ37MON can batch-read the interrupt requests allocated to interrupt vector No. 53.

bit	31															16
Field	Reserved															
Attribute	R															
Initial value	0x0000															

bit	15	7	6	5	4	3	2	1	0
Field	Reserved		RCEC1INT	USB1INT					
Attribute	R		R	R					
Initial value	000000000		0	000000					

[bit31:7] Reserved: Reserved bits

Reads out "0".

[bit6] RCEC1INT:

Value	Description
0	No interrupt request for HDMI-CEC/Remote Control Reception ch.1
1	Interrupt request for HDMI-CEC/Remote Control Reception ch.1

[bit5:0] USB1INT:

bit No.	Value	Description
5	0	No interrupt request of USB ch.1 status (SOFIRQ, CMPIRQ)
	1	Interrupt request of USB ch.1 status (SOFIRQ, CMPIRQ)
4	0	No interrupt request of USB ch.1 status (DIRQ, URIRQ, RWKIRQ, CNNIRQ)
	1	Interrupt request of USB ch.1 status (DIRQ, URIRQ, RWKIRQ, CNNIRQ)
3	0	No interrupt request of USB ch.1 status (SPK)
	1	Interrupt request of USB ch.1 status (SPK)
2	0	No interrupt request of USB ch.1 status (SUSP, SOF, BRST, CONF, WKUP)
	1	Interrupt request of USB ch.1 status (SUSP, SOF, BRST, CONF, WKUP)
1	0	No Endpoint0 DRQO interrupt request on the USB ch.1
	1	Endpoint0 DRQO interrupt request on the USB ch.1
0	0	No Endpoint0 DRQI interrupt request on the USB ch.1
	1	Endpoint0 DRQI interrupt request on the USB ch.1

4.26. IRQ38 Batch Read Register (IRQ38MON)

IRQ38MON can batch-read the interrupt requests allocated to interrupt vector No. 54.

bit	31															16
Field	Reserved															
Attribute	R															
Initial value	0x0000															

bit	15	14	13	12	11	10	9	8	7	6	5	4	3	2	1	0
Field	Reserved								DMAINT							
Attribute	R								R							
Initial value	0x00								0x00							

[bit31:8] Reserved: Reserved bits

Reads out "0".

[bit7:0] DMAINT:

bit No.	Value	Description
7	0	No interrupt request of DMA controller ch.7
	1	Interrupt request of DMA controller ch.7
6	0	No interrupt request of DMA controller ch.6
	1	Interrupt request of DMA controller ch.6
5	0	No interrupt request of DMA controller ch.5
	1	Interrupt request of DMA controller ch.5
4	0	No interrupt request of DMA controller ch.4
	1	Interrupt request of DMA controller ch.4
3	0	No interrupt request of DMA controller ch.3
	1	Interrupt request of DMA controller ch.3
2	0	No interrupt request of DMA controller ch.2
	1	Interrupt request of DMA controller ch.2
1	0	No interrupt request of DMA controller ch.1
	1	Interrupt request of DMA controller ch.1
0	0	No interrupt request of DMA controller ch.0
	1	Interrupt request of DMA controller ch.0

4.27. IRQ41 Batch Read Register (IRQ41MON)

IRQ41MON can batch-read the interrupt requests allocated to interrupt vector No. 57.

bit	31															16
Field	Reserved															
Attribute	R															
Initial value	0x0000															

bit	15	14	13	12	11	10	9	8	7	6	5	4	3	2	1	0
Field	Reserved										QUD1INT					
Attribute	R										R					
Initial value	0000000000										000000					

[bit31:6] Reserved: Reserved bits

Reads out "0".

[bit5:0] QUD1INT:

bit No.	Value	Description
5	0	No interrupt request of PC match & RC match on QPRC ch.1
	1	Interrupt request of PC match & RC match on QPRC ch.1
4	0	No interrupt request of out of range RC detection on QPRC ch.1
	1	Interrupt request of out of range RC detection on QPRC ch.1
3	0	No interrupt request of PC count invert on QPRC ch.1
	1	Interrupt request of PC count invert on QPRC ch.1
2	0	No interrupt request of overflow/underflow/zero index on QPRC ch.1
	1	Interrupt request of overflow/underflow/zero index on QPRC ch.1
1	0	No interrupt request of PC&RC match on QPRC ch.1
	1	Interrupt request of PC&RC match on QPRC ch.1
0	0	No interrupt request of PC match on QPRC ch.1
	1	Interrupt request of PC match on QPRC ch.1

4.28. IRQ46 Batch Read Register (IRQ46MON)

IRQ46MON can batch-read the interrupt requests allocated to interrupt vector No. 62.

bit	31															16
Field	Reserved															
Attribute	R															
Initial value	0x0000															

bit	15	14	13	12	11	10	9	8	7	6	5	4	3	2	1	0
Field	BTINT															
Attribute	R															
Initial value	0x0000															

[bit31:16] Reserved: Reserved bits

Reads out "0".

[bit15:0] BTINT:

bit No.	Value	Description
15	0	No IRQ1 interrupt request of base timer ch.15
	1	IRQ1 interrupt request of base timer ch.15
14	0	No IRQ0 interrupt request of base timer ch.15
	1	IRQ0 interrupt request of base timer ch.15
13	0	No IRQ1 interrupt request of base timer ch.14
	1	IRQ1 interrupt request of base timer ch.14
12	0	No IRQ0 interrupt request of base timer ch.14
	1	IRQ0 interrupt request of base timer ch.14
11	0	No IRQ1 interrupt request of base timer ch.13
	1	IRQ1 interrupt request of base timer ch.13
10	0	No IRQ0 interrupt request of base timer ch.13
	1	IRQ0 interrupt request of base timer ch.13
9	0	No IRQ1 interrupt request of base timer ch.12
	1	IRQ1 interrupt request of base timer ch.12
8	0	No IRQ0 interrupt request of base timer ch.12
	1	IRQ0 interrupt request of base timer ch.12

bit No.	Value	Description
7	0	No IRQ1 interrupt request of base timer ch.11
	1	IRQ1 interrupt request of base timer ch.11
6	0	No IRQ0 interrupt request of base timer ch.11
	1	IRQ0 interrupt request of base timer ch.11
5	0	No IRQ1 interrupt request of base timer ch.10
	1	IRQ1 interrupt request of base timer ch.10
4	0	No IRQ0 interrupt request of base timer ch.10
	1	IRQ0 interrupt request of base timer ch.10
3	0	No IRQ1 interrupt request of base timer ch.9
	1	IRQ1 interrupt request of base timer ch.9
2	0	No IRQ0 interrupt request of base timer ch.9
	1	IRQ0 interrupt request of base timer ch.9
1	0	No IRQ1 interrupt request of base timer ch.8
	1	IRQ1 interrupt request of base timer ch.8
0	0	No IRQ0 interrupt request of base timer ch.8
	1	IRQ0 interrupt request of base timer ch.8

As shown in Table 4-2, the interrupt factors IRQ0 and IRQ1 of the base timer differ by the base timer's function to be used.

Table 4-2 Interrupt factor in each base timer function

Function	Interrupt Factor IRQ0	Interrupt Factor IRQ1
16-bit PWM timer	Detection of underflow/ detection of duty match	Detection of timer start trigger
16-bit PPG timer	Detection of underflow	Detection of timer start trigger
16-/32-bit reload timer	Detection of underflow	Detection of timer start trigger
16-/32-bit PWC timer	Detection of overflow	Detection of measurement end

4.29. IRQ47 Batch Read Register (IRQ47MON)

IRQ47MON can batch-read the interrupt requests allocated to interrupt vector No. 63.

bit	31															16
Field	Reserved															
Attribute	R															
Initial value	0x0000															

bit	15	14	13	12	11	10	9	8	7	6	5	4	3	2	1	0
Field	Reserved				FALSHINT	QUD2INT						Reserved				
Attribute	R				R	R						R				
Initial value	0000				0	000000						00000				

[bit31:12] Reserved: Reserved bits
Reads out "0".

[bit11] FLASHINT:

Value	Description
0	No RDY, HANG interrupt request for flash memory
1	RDY, HANG interrupt request for flash memory

[bit10:5] QUD2INT:

bit No.	Value	Description
10	0	No interrupt request of PC match & RC match on QPRC ch.2
	1	Interrupt request of PC match & RC match on QPRC ch.2
9	0	No interrupt request of out of range RC detection on QPRC ch.2
	1	Interrupt request of out of range RC detection on QPRC ch.2
8	0	No interrupt request of PC count invert on QPRC ch.2
	1	Interrupt request of PC count invert on QPRC ch.2
7	0	No interrupt request of overflow/underflow/zero index on QPRC ch.2
	1	Interrupt request of overflow/underflow/zero index on QPRC ch.2
6	0	No interrupt request of PC&RC match on QPRC ch.2
	1	Interrupt request of PC&RC match on QPRC ch.2
5	0	No interrupt request of PC match on QPRC ch.2
	1	Interrupt request of PC match on QPRC ch.2

[bit4:0] Reserved: Reserved bits
Reads out "0".

4.30. USB ch.0 Odd Packet Size DMA Enable Register (ODDPKS)

When transferred in USB ch.0 automatic transfer IN direction, the effective bit width only for the last data of the last packet is forcibly converted to Byte (8 bits) and is written in the USB endpoint (which exists for TYPE1 products or later).

bit	31 29	28 24	23 16
Field	Reserved	ODDPKS[4:0]	Reserved
Attribute	R/W	R/W	R/W
Initial value	000	00000	0x00

bit	15 0
Field	Reserved
Attribute	R/W
Initial value	0x0000

[bit31:29] Reserved: Reserved bits

Set these bits to "0". Read value is "0".

[bit28] ODDPKS4:

Value	Description
0	DMA transfer bit width is not converted.
1	When the transfer destination address of DMAC is USB:EP5DT, the bit width of the last transfer data is converted to Byte.

[bit27] ODDPKS3:

Value	Description
0	DMA transfer bit width is not converted.
1	When the transfer destination address of DMAC is USB:EP4DT, the bit width of the last transfer data is converted to Byte.

[bit26] ODDPKS2:

Value	Description
0	DMA transfer bit width is not converted.
1	When the transfer destination address of DMAC is USB:EP3DT, the bit width of the last transfer data is converted to Byte.

[bit25] ODDPKS1:

Value	Description
0	DMA transfer bit width is not converted.
1	When the transfer destination address of DMAC is USB:EP2DT, the bit width of the last transfer data is converted to Byte.

[bit24] ODDPKS0:

Value	Description
0	DMA transfer bit width is not converted.
1	When the transfer destination address of DMAC is USB:EP1DT, the bit width of the last transfer data is converted to Byte.

[bit23:0] Reserved: Reserved bits

Set these bits to "0". Read value is "0".

<Notes>

- This register is enabled only when transferring to IN direction in the USB data number automatic transfer mode in USB ch.0.
- Do not set to "1" when transferring even bytes.

4.31. Interrupt Factor Vector Relocate Setting Register (IRQCMODE)

This register is used to select the interrupt factor vector described in Table 3-1 of chapter "Interrupts" or in Table 3-1 of "3. Exception and Interrupt Factor Vectors". This register is not available in TYPE0 to TYPE3 products.

bit	31															16
Field	Reserved															
Attribute	R/W															
Initial value	0x0000															

bit	15	14	13	12	11	10	9	8	7	6	5	4	3	2	1	0
Field	Reserved															IRQCMODE
Attribute	R/W															R/W
Initial value	000000000000000															0

[bit31:1] Reserved: Reserved bits

Set these bits to "0". Read value is "0".

[bit0] IRQCMODE:

Value	Description
0	Assign the interrupt factor vector as shown in Table 3-1 of chapter "Interrupts". (Compatible with TYPE0 to TYPE2)
1	Assign the interrupt factor vector as shown in Table 3-1 of "3. Exception and Interrupt Factor Vectors".

4.32. Interrupt Factor Selection Register0 (RCINTSEL0)

This register is used to select the interrupt factor of the interrupt vector No.19 to 22. This register is valid when IRQCMODE=1.

bit	31	30	29	28	27	26	25	24	23	22	21	20	19	18	17	16
Field	INTSEL3								INTSEL2							
Attribute	R/W								R/W							
Initial value	0x00								0x00							

bit	15	14	13	12	11	10	9	8	7	6	5	4	3	2	1	0
Field	INTSEL1								INTSEL0							
Attribute	R/W								R/W							
Initial value	0x00								0x00							

[bit31:24] INTSEL3:

These bits select* the interrupt factor of the interrupt vector No.22.

[bit23:16] INTSEL2:

These bits select* the interrupt factor of the interrupt vector No.21.

[bit15:8] INTSEL1:

These bits select* the interrupt factor of the interrupt vector No.20.

[bit7:0] INTSEL0:

These bits select* the interrupt factor of the interrupt vector No.19.

*: See Table 4-3 for the selection interrupt factor.

<Notes>

- The interrupt factors selected with RCINTSEL0 are masked with IRQ11 to IRQ47. (The applicable bits of IRQ11MON to IRQ47MON registers are also masked.)
- Set the interrupt factors selected with INTSEL0 to INTSEL7 bits not to be overlapped.

4.33. Interrupt Factor Selection Register1 (RCINTSEL1)

This register is used to select the interrupt factor of the interrupt vector No.23 to 26. This register is valid when IRQCMODE:IRQCMODE=1.

bit	31	30	29	28	27	26	25	24	23	22	21	20	19	18	17	16
Field	INTSEL7								INTSEL6							
Attribute	R/W								R/W							
Initial value	0x00								0x00							

bit	15	14	13	12	11	10	9	8	7	6	5	4	3	2	1	0
Field	INTSEL5								INTSEL4							
Attribute	R/W								R/W							
Initial value	0x00								0x00							

[bit31:24] INTSEL7:

These bits select* the interrupt factor of the interrupt vector No.26.

[bit23:16] INTSEL6:

These bits select* the interrupt factor of the interrupt vector No.25.

[bit15:8] INTSEL5:

These bits select* the interrupt factor of the interrupt vector No.24.

[bit7:0] INTSEL4:

These bits select* the interrupt factor of the interrupt vector No.23.

*: See Table 4-3 for the selection interrupt factor.

<Notes>

- The interrupt factors selected with RCINTSEL1 are masked with IRQ11 to IRQ47. (The applicable bits of IRQ11MON to IRQ47MON are also masked.)
- Set the interrupt factors selected with INTSEL0 to INTSEL7 not to be overlapped.

Table 4-3 Selection interrupt factor

Setting value of RCINTSELx:INTSELx	Interrupt Factor
0x00	No interrupt factor is selected
0x01	External interrupt ch.0
0x02	External interrupt ch.1
0x03	External interrupt ch.2
0x04	External interrupt ch.3
0x05	External interrupt ch.4
0x06	External interrupt ch.5
0x07	External interrupt ch.6
0x08	External interrupt ch.7
0x09	External interrupt ch.8
0x0A	External interrupt ch.9
0x0B	External interrupt ch.10
0x0C	External interrupt ch.11
0x0D	IRQ0/IRQ1 of the base timer ch.0
0x0E	IRQ0/IRQ1 of the base timer ch.1
0x0F	IRQ0/IRQ1 of the base timer ch.2
0x10	IRQ0/IRQ1 of the base timer ch.3
0x11	IRQ0/IRQ1 of the base timer ch.4
0x12	IRQ0/IRQ1 of the base timer ch.5
0x13	IRQ0/IRQ1 of the base timer ch.6
0x14	IRQ0/IRQ1 of the base timer ch.7
0x15	Reception interrupt of MFS ch.0
0x16	Reception interrupt of MFS ch.1
0x17	Reception interrupt of MFS ch.2
0x18	Reception interrupt of MFS ch.3
0x19	Zero detection interrupt of MFT unit0 free-run timer ch.0
0x1A	Zero detection interrupt of MFT unit1 free-run timer ch.0
0x1B	Zero detection interrupt of MFT unit2 free-run timer ch.0
0x1C	DMAC ch.0
0x1D	DMAC ch.1
0x1E	DMAC ch.2
0x1F	DMAC ch.3
0x20	Reception interrupt of MFS ch.8
0x21	Reception interrupt of MFS ch.9

Setting value of RCINTSELx:INTSELx	Interrupt Factor
0x22	Reception interrupt of MFS ch.10
0x23	Reception interrupt of MFS ch.11
0x24	Reception interrupt of MFS ch.12
0x25	Reception interrupt of MFS ch.13
0x26	Reception interrupt of MFS ch.14
0x27	Reception interrupt of MFS ch.15
0x28	Transmission/Status Interrupt of MFS ch.8
0x29	Transmission/Status Interrupt of MFS ch.9
0x2A	Transmission/Status Interrupt of MFS ch.10
0x2B	Transmission/Status Interrupt of MFS ch.11
0x2C	Transmission/Status Interrupt of MFS ch.12
0x2D	Transmission/Status Interrupt of MFS ch.13
0x2E	Transmission/Status Interrupt of MFS ch.14
0x2F	Transmission/Status Interrupt of MFS ch.15
0x30 to 0xFF	Reserved

5. Usage Precautions

Be careful with the following points when using the interrupt controller.

- The interrupt request signals from each of the peripheral resources are notified by level. When exiting from interrupt processing, always clear the interrupt request.
- When other interruption with a high priority is processing, the interrupt request from peripheral functions notified to NVIC is pended inside NVIC. When canceling the interrupt request which was pended inside NVIC, clear the interrupt request from peripheral functions, and clear the interrupt request which was pended inside NVIC by the Interrupt Clear-Pending Registers (addresses: 0xE000E280 to 0xE000E29C) installed in the NVIC.
- The NMIX pin is allocated shared with a general-purpose port. The initial value after reset is released is configured as a general-purpose port, and the NMI input is masked. In order to use the NMI, enable NMI by configuring the port. See the chapter of "External Interrupt and NMI Control Unit" for details.
- See the chapters for each of the macros for the correlation between the specific event detection registers and interrupt enable registers in each peripheral resource.

CHAPTER 7-4: Interrupts (C)

This chapter explains the interrupt controller and peripheral interrupt request.

1. Overview
2. Configuration
3. Exception and Interrupt Factor Vector
4. Registers
5. Usage Precautions

1. Overview

Interrupt controller determines the priority of interrupt requests to send them to the CPU. The CPU core of Cortex-M3 has NVIC (Nest type Vector Interrupt Controller) inside the core. Some interrupt signals from the peripheral are aggregated and input to one interrupt factor vector of NVIC. You can check which interrupt request occurs with the interrupt request batch read register. Also, some interrupt factors can be set to convert interrupt requests into DMA request signals.

■ Features of NVIC (Nest type Vector Interrupt Controller)

- 32 maskable peripheral interrupt channels (not including 16 exception interrupts of Cortex -M3)
- 8 programmable interrupt priority levels (using 3-bit priority interrupt)
- Realizing exception and interrupt process with short latency
- Implementing system control register
- Compatible with non-maskable interrupt (NMI) input

NVIC and interface of the processor core are closely connected to realize an interrupt process with short latency and an efficient process of subsequent interrupts. NVIC retains nested interrupt information to enable a tail chain of interrupts.

All the interrupts including core exception are managed by NVIC. For the details of exception and NVIC, refer to "Chapter 5: Exception" and "Chapter 8: Nest Type Vector Interrupt Controller" of "Cortex-M3 Technical Reference Manual" published by Arm.

<Note>

In "Cortex-M3 Technical Reference Manual", all exception types (IRQ) are defined as external interrupt inputs. In this manual, exception type (IRQ) is described as a peripheral interrupt. Peripheral interrupts include interrupts by external pins (external interrupt and NMI control block) and interrupts from a peripheral resource inside the LSI.

■ Aggregation function of interrupt factors

Interrupt request signals from each peripheral resource are aggregated to 48 factors to input to NVIC. Also, interrupt request signals of NMIX external pins are logically ORed with interrupt signals of the hardware watchdog to input to NVIC.

■ Batch read function of peripheral interrupt requests

Interrupt request batch read register can read an interrupt request signal from a peripheral resource aggregated to one interrupt request signal at once. By reading this register, you can check which interrupt request is occurring. However, you cannot clear interrupt request flags with this function. Clear the interrupt request flags with the register of each peripheral function.

■ Output select function of peripheral interrupt requests

DMA transfer can be activated using interrupt requests from 32 peripheral functions. You can select whether to output interrupt request signals from each peripheral resource to the CPU or to output them to DMAC using the DRQSEL register.

2. Configuration

This section shows the configuration of interrupt controller.

■ Block diagram of interrupt controller

Figure 2-1 Block diagram of interrupt controller

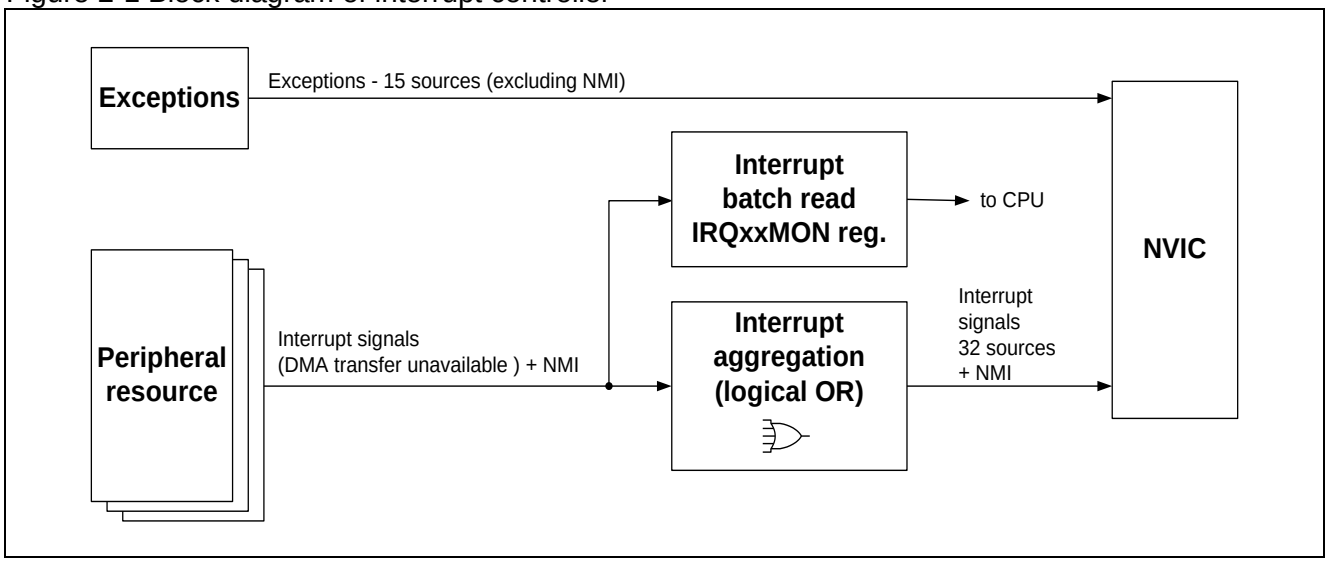

● Interrupt factor aggregation block

Aggregate (logical OR) interrupt request signals from each peripheral resource to 32 factors to output to NVIC.

● Peripheral interrupt request batch read register block

This register checks which interrupt request signal of each peripheral resource generates the current interrupt for interrupt request signals from the peripheral resource aggregated to one interrupt request signal.

3. Exception and Interrupt Factor Vector

This section shows Table 3-1 of exceptions and interrupt factor vector input to NVIC.

Table 3-1 Exception and interrupt factor vector

Vector No.	IRQ No.	Exception and interrupt factor	Vector Offset
0	-	Stack pointer initial value	0x00
1	-	Reset	0x04
2	-	Non-maskable interrupt(NMI) / Hardware watchdog timer	0x08
3	-	Hard fault	0x0C
4	-	Memory management	0x10
5	-	Bus fault	0x14
6	-	Use fault	0x18
7-10	-	Reserved	0x1C-0x2B
11	-	SVCall (supervisor call)	0x2C
12	-	Debug monitor	0x30
13	-	Reserved	0x34
14	-	PendSV	0x38
15	-	SysTick	0x3C
16	0	Abnormal frequency detection by clock supervisor (FCS)	0x40
17	1	Software watchdog timer	0x44
18	2	Low voltage detection (LVD)	0x48
19	3	MFT unit0 waveform generator / DTIF (motor emergency stop)	0x4C
20	4	External pin interrupt requests from ch.0 to ch.7	0x50
21	5	External pin interrupt requests from ch.8 to ch.15	0x54
22	6	Receive interrupt request of MFS ch.0	0x58
23	7	Transmission interrupt request and status interrupt request of MFS ch.0	0x5C
24	8	Receive interrupt request of MFS ch.1	0x60
25	9	Transmission interrupt request and status interrupt request of MFS ch.1	0x64
26	10	Receive interrupt request of MFS ch.2	0x68
27	11	Transmission interrupt request and status interrupt request of MFS ch.2	0x6C
28	12	Receive interrupt request of MFS ch.3	0x70
29	13	Transmission interrupt request and status interrupt request of MFS ch.3	0x74
30	14	Receive interrupt request of MFS ch.4	0x78
31	15	Transmission interrupt request and status interrupt request of MFS ch.4	0x7C
32	16	Receive interrupt request of MFS ch.5	0x80
33	17	Transmission interrupt request and status interrupt request of MFS ch.5	0x84

Vector No.	IRQ No.	Exception and interrupt factor	Vector Offset
34	18	Receive interrupt request of MFS ch.6	0x88
35	19	Transmission interrupt request and status interrupt request of MFS ch.6	0x8C
36	20	Receive interrupt request of MFS ch.7	0x90
37	21	Transmission interrupt request and status interrupt request of MFS ch.7	0x94
38	22	PPG ch.0/2/4	0x98
39	23	External main OSC/external sub OSC/main PLL/RTC interrupt request	0x9C
40	24	A/D converter unit0	0xA0
41	25	MFT unit0 free-rum timer	0xA4
42	26	MFT unit0 input capture	0xA8
43	27	MFT unit0 output compare	0xAC
44	28	Base timers from ch.0 to ch.7	0xB0
45	29	LCD Controller	0xB4
46	30	HDMI-CEC, Remote Control Reception ch.0	0xB8
47	31	HDMI-CEC, Remote Control Reception ch.1	0xBC

The priority of exception of vector No.4 to No.15 can be set by the system handler priority register (address: 0xE000ED18, 0xE000ED1C, 0xE000ED20) implemented in NVIC. The priority of peripheral interrupts after vector No.16 can be set by the IRQ Priority Register (address: 0xE000E400 to 0xE000E42C) implemented in NVIC.

The interrupt factors of vector No.2 and from No.16 to No.47 can be checked by the batch read register. For other exceptions and interrupts, refer to "Chapter 8: Nested Vectored Interrupt Controller" of " Cortex-M3 Technical Reference Manual".

Also, the batch-read factors of interrupts of vector No.2 and from No.16 to No.47 may be logically ORed signals of multiple interrupts factors in each peripheral macro. For details, see the descriptions of interrupts of each peripheral resource.

4. Registers

This section explains the interrupt request batch read registers.

■ List of interrupt request batch read registers

Register abbreviation	Register name	Reference
EXC02MON	EXC02 batch read register	4.1
IRQ00MON	IRQ00 batch read register	4.2
IRQ01MON	IRQ01 batch read register	4.3
IRQ02MON	IRQ02 batch read register	4.4
IRQ03MON	IRQ03 batch read register	4.5
IRQ04MON	IRQ04 batch read register	4.6
IRQ05MON	IRQ05 batch read register	4.7
IRQ06MON	IRQ06 batch read register	4.8
IRQ07MON	IRQ07 batch read register	4.9
IRQ08MON	IRQ08 batch read register	4.8
IRQ09MON	IRQ09 batch read register	4.9
IRQ10MON	IRQ10 batch read register	4.8
IRQ11MON	IRQ11 batch read register	4.9
IRQ12MON	IRQ12 batch read register	4.8
IRQ13MON	IRQ13 batch read register	4.9
IRQ14MON	IRQ14 batch read register	4.8
IRQ15MON	IRQ15 batch read register	4.9
IRQ16MON	IRQ16 batch read register	4.8
IRQ17MON	IRQ17 batch read register	4.9
IRQ18MON	IRQ18 batch read register	4.8
IRQ19MON	IRQ19 batch read register	4.9
IRQ20MON	IRQ20 batch read register	4.8
IRQ21MON	IRQ21 batch read register	4.9
IRQ22MON	IRQ22 batch read register	4.10
IRQ23MON	IRQ23 batch read register	4.11
IRQ24MON	IRQ24 batch read register	4.12

Register abbreviation	Register name	Reference
IRQ25MON	IRQ25 batch read register	4.13
IRQ26MON	IRQ26 batch read register	4.14
IRQ27MON	IRQ27 batch read register	4.15
IRQ28MON	IRQ28 batch read register	4.16
IRQ29MON	IRQ29 batch read register	4.17
IRQ30MON	IRQ30 batch read register	4.18
IRQ31MON	IRQ31 batch read register	4.19

For the details of registers within NVIC, refer to "Chapter 8: Nest Type Vector Interrupt Controller" of "Cortex-M3 Technical Reference Manual".

4.1. EXC02 Batch Read Register (EXC02MON)

EXC02MON can batch-read the interrupt request assigned to interrupt vector No.2.

bit	31															16
Field	Reserved															
Attribute	R															
Initial value	0x0000															

bit	15	14	13	12	11	10	9	8	7	6	5	4	3	2	1	0
Field	Reserved														HWINT	NMI
Attribute	R														R	R
Initial value	00000000000000														0	0

[bit31:2] Reserved: Reserved bits
"0" is read.

[bit1] HWINT:

Value	Description
0	No hardware watchdog timer interrupt request
1	Hardware watchdog timer interrupt request

[bit0] NMI:

Value	Description
0	No NMIX external pin interrupt request
1	NMIX external pin interrupt request

4.2. IRQ00 Batch Read Register (IRQ00MON)

IRQ00MON can batch-read the interrupt request assigned to interrupt vector No.16.

bit	31															16
Field	Reserved															
Attribute	R															
Initial value	0x0000															

bit	15	14	13	12	11	10	9	8	7	6	5	4	3	2	1	0
Field	Reserved															FCSINT
Attribute	R															R
Initial value	000000000000000															0

[bit31:1] Reserved: Reserved bits
"0" is read.

[bit0] FCSINT:

Value	Description
0	No interrupt request of abnormal frequency detection (FCS) by CSV
1	Interrupt request of abnormal frequency detection (FCS) by CSV

4.3. IRQ01 Batch Read Register (IRQ01MON)

IRQ01MON can batch-read the interrupt request assigned to interrupt vector No.17.

bit	31															16
Field	Reserved															
Attribute	R															
Initial value	0x0000															

bit	15	14	13	12	11	10	9	8	7	6	5	4	3	2	1	0
Field	Reserved															SWWDTINT
Attribute	R															R
Initial value	000000000000000															0

[bit31:1] Reserved: Reserved bits

"0" is read.

[bit0] SWWDTINT:

Value	Description
0	No interrupt request of software watchdog timer
1	Interrupt request of software watchdog timer

4.4. IRQ02 Batch Read Register (IRQ02MON)

IRQ02MON can batch-read the interrupt request assigned to interrupt vector No.18.

bit	31															16
Field	Reserved															
Attribute	R															
Initial value	0x0000															

bit	15	14	13	12	11	10	9	8	7	6	5	4	3	2	1	0
Field	Reserved															LVDINT
Attribute	R															R
Initial value	000000000000000															0

[bit31:1] Reserved: Reserved bits
"0" is read.

[bit0] LVDINT:

Value	Description
0	No interrupt request of low voltage detection (LVD)
1	Interrupt request of low voltage detection (LVD)

4.5. IRQ03 Batch Read Register (IRQ03MON)

IRQ03MON can batch-read the interrupt request assigned to interrupt vector No.19.

bit	31															16
Field	Reserved															
Attribute	R															
Initial value	0x0000															

bit	15	14	13	12	11	10	9	8	7	6	5	4	3	2	1	0
Field	Reserved												WAVE0INT			
Attribute	R												R			
Initial value	0x000												0000			

[bit31:4] Reserved: Reserved bits

"0" is read.

[bit3:0] WAVE0INT:

bit number	Value	Description
3	0	No interrupt request of WFG timer 54 of MFT unit0
	1	Interrupt request of WFG timer 54 of MFT unit0
2	0	No interrupt request of WFG timer 32 of MFT unit0
	1	Interrupt request of WFG timer 32 of MFT unit0
1	0	No interrupt request of WFG timer 10 of MFT unit0
	1	Interrupt request of WFG timer 10 of MFT unit0
0	0	No interrupt request of DTIF (motor emergency stop) of MFT unit0
	1	Interrupt request of DTIF (motor emergency stop) of MFT unit0

4.6. IRQ04 Batch Read Register (IRQ04MON)

IRQ04MON can batch-read the interrupt request assigned to interrupt vector No.20.

IRQ04MON shows the state of the interrupt request of external interrupts from ch.0 to ch.7.

bit	31															16
Field	Reserved															
Attribute	R															
Initial value	0x0000															

bit	15	14	13	12	11	10	9	8	7	6	5	4	3	2	1	0
Field	Reserved								EXTINT							
Attribute	R								R							
Initial value	00000000								00000000							

[bit31:8] Reserved: Reserved bits
"0" is read.

[bit7:0] EXTINT:

bit number	Value	Description
7	0	No interrupt request of external interrupt ch.7
	1	Interrupt request of external interrupt ch.7
6	0	No interrupt request of external interrupt ch.6
	1	Interrupt request of external interrupt ch.6
5	0	No interrupt request of external interrupt ch.5
	1	Interrupt request of external interrupt ch.5
4	0	No interrupt request of external interrupt ch.4
	1	Interrupt request of external interrupt ch.4
3	0	No interrupt request of external interrupt ch.3
	1	Interrupt request of external interrupt ch.3
2	0	No interrupt request of external interrupt ch.2
	1	Interrupt request of external interrupt ch.2
1	0	No interrupt request of external interrupt ch.1
	1	Interrupt request of external interrupt ch.1
0	0	No interrupt request of external interrupt ch.0
	1	Interrupt request of external interrupt ch.0

4.7. IRQ05 Batch Read Register (IRQ05MON)

IRQ05MON can batch-read the interrupt request assigned to interrupt vector No.21.

IRQ05MON shows the state of interrupt request of external interrupts from ch.8 to ch.15.

bit	31															16
Field	Reserved															
Attribute	R															
Initial value	0x0000															

bit	15	14	13	12	11	10	9	8	7	6	5	4	3	2	1	0
Field	Reserved								EXTINT							
Attribute	R								R							
Initial value	0x00								00000000							

[bit31:8] Reserved: Reserved bits

"0" is read.

[bit7:0] EXTINT:

bit number	Value	Description
7	0	No interrupt request of external interrupt ch.15
	1	Interrupt request of external interrupt ch.15
6	0	No interrupt request of external interrupt ch.14
	1	Interrupt request of external interrupt ch.14
5	0	No interrupt request of external interrupt ch.13
	1	Interrupt request of external interrupt ch.13
4	0	No interrupt request of external interrupt ch.12
	1	Interrupt request of external interrupt ch.12
3	0	No interrupt request of external interrupt ch.11
	1	Interrupt request of external interrupt ch.11
2	0	No interrupt request of external interrupt ch.10
	1	Interrupt request of external interrupt ch.10
1	0	No interrupt request of external interrupt ch.9
	1	Interrupt request of external interrupt ch.9
0	0	No interrupt request of external interrupt ch.8
	1	Interrupt request of external interrupt ch.8

4.8. IRQ06/08/10/12/14/16/18/20 Batch Read Register (IRQxxMON)

IRQ06MON can batch-read the interrupt request assigned to interrupt vector No.22.
IRQ08MON can batch-read the interrupt request assigned to interrupt vector No.24.
IRQ10MON can batch-read the interrupt request assigned to interrupt vector No.26.
IRQ12MON can batch-read the interrupt request assigned to interrupt vector No.28.
IRQ14MON can batch-read the interrupt request assigned to interrupt vector No.30.
IRQ16MON can batch-read the interrupt request assigned to interrupt vector No.32.
IRQ18MON can batch-read the interrupt request assigned to interrupt vector No.34.
IRQ20MON can batch-read the interrupt request assigned to interrupt vector No.36.

IRQ06MON shows the state of receive interrupt request of MFS ch.0.
IRQ08MON shows the state of receive interrupt request of MFS ch.1.
IRQ10MON shows the state of receive interrupt request of MFS ch.2.
IRQ12MON shows the state of receive interrupt request of MFS ch.3.
IRQ14MON shows the state of receive interrupt request of MFS ch.4.
IRQ16MON shows the state of receive interrupt request of MFS ch.5.
IRQ18MON shows the state of receive interrupt request of MFS ch.6.
IRQ20MON shows the state of receive interrupt request of MFS ch.7.

bit	31															16
Field	Reserved															
Attribute	R															
Initial value	0x0000															

bit	15	14	13	12	11	10	9	8	7	6	5	4	3	2	1	0
Field	Reserved															MFSINT
Attribute	R															R
Initial value	000000000000000															0

[bit31:1] Reserved: Reserved bits
"0" is read.

[bit0] MFSINT:

Value	Description
0	No receive interrupt request of MFS appropriate channel
1	Receive interrupt request of MFS appropriate channel

4.9. IRQ07/09/11/13/15/17/19/21 Batch Read Register (IRQxxMON)

IRQ07MON can batch-read the interrupt request assigned to interrupt vector No.23.
IRQ09MON can batch-read the interrupt request assigned to interrupt vector No.25.
IRQ11MON can batch-read the interrupt request assigned to interrupt vector No.27.
IRQ13MON can batch-read the interrupt request assigned to interrupt vector No.29.
IRQ15MON can batch-read the interrupt request assigned to interrupt vector No.31.
IRQ17MON can batch-read the interrupt request assigned to interrupt vector No.33.
IRQ19MON can batch-read the interrupt request assigned to interrupt vector No.35.
IRQ21MON can batch-read the interrupt request assigned to interrupt vector No.37

IRQ07MON shows the state of the Transmission interrupt request and status interrupt request of MFS ch.0.
IRQ09MON shows the state of the Transmission interrupt request and status interrupt request of MFS ch.1.
IRQ11MON shows the state of the Transmission interrupt request and status interrupt request of MFS ch.2.
IRQ13MON shows the state of the Transmission interrupt request and status interrupt request of MFS ch.3.
IRQ15MON shows the state of the Transmission interrupt request and status interrupt request of MFS ch.4.
IRQ17MON shows the state of the Transmission interrupt request and status interrupt request of MFS ch.5.
IRQ19MON shows the state of the Transmission interrupt request and status interrupt request of MFS ch.6.
IRQ21MON shows the state of the Transmission interrupt request and status interrupt request of MFS ch.7.

bit	31															16
Field	Reserved															
Attribute	R															
Initial value	0x0000															

bit	15	14	13	12	11	10	9	8	7	6	5	4	3	2	1	0
Field	Reserved														MFSINT	
Attribute	R														R	
Initial value	00000000000000														00	

[bit31:2] Reserved: Reserved bits
"0" is read.

[bit1:0] MFSINT:

bit number	Value	Description
1	0	No status interrupt request of MFS appropriate channel
	1	Status interrupt request of MFS appropriate channel
0	0	No transmission interrupt request of MFS appropriate channel
	1	Transmission interrupt request of MFS appropriate channel

4.10. IRQ22 Batch Read Register (IRQ22MON)

IRQ22MON can batch-read the interrupt request assigned to interrupt vector No.38.

IRQ22MON shows the state of the interrupts of PPG ch.2, ch.4, and ch.4.

bit	31															16
Field	Reserved															
Attribute	R															
Initial value	0x0000															

bit	15	14	13	12	11	10	9	8	7	6	5	4	3	2	1	0
Field	Reserved													PPGINT		
Attribute	R													R		
Initial value	0000000000000													000		

[bit31:3] Reserved: Reserved bits

"0" is read.

[bit2:0] PPGINT:

bit number	Value	Description
2	0	No interrupt request of PPG ch.4
	1	Interrupt request of PPG ch.4
1	0	No interrupt request of PPG ch.2
	1	Interrupt request of PPG ch.2
0	0	No interrupt request of PPG ch.0
	1	Interrupt request of PPG ch.0

4.11. IRQ23 Batch Read Register (IRQ23MON)

IRQ23MON can batch-read the interrupt request assigned to interrupt vector No.39.

bit	31	16
Field	Reserved	
Attribute	R	
Initial value	0x0000	

bit	15	14	13	12	11	10	9	8	7	6	5	4	3	2	1	0
Field	Reserved										RTCINT	Reserved		MPLLINT	SOSCINT	MOSCINT
Attribute	R										R	R		R	R	R
Initial value	0000000000										0	00		0	0	0

[bit31:6] Reserved: Reserved bits
"0" is read.

[bit5] RTCINT:

Value	Description
0	No interrupt request of RTC
1	Interrupt request of RTC

[bit4:3] Reserved: Reserved bits
"0" is read.

[bit2] MPLLINT:

Value	Description
0	No stabilization wait complete interrupt request of main PLL oscillation
1	Stabilization wait complete interrupt request of main PLL oscillation

[bit1] SOSCINT:

Value	Description
0	No stabilization wait complete interrupt request of sub clock oscillation
1	Stabilization wait complete interrupt request of sub clock oscillation

[bit0] MOSCINT:

Value	Description
0	No stabilization wait complete interrupt request of main clock oscillation
1	Stabilization wait complete interrupt request of main clock oscillation

4.12. IRQ24 Batch Read Register (IRQ24MON)

IRQ24MON can batch-read the interrupt request assigned to interrupt vector No.40.

IRQ24MON shows the state of the interrupt request from A/D converter unit0.

bit	31															16
Field	Reserved															
Attribute	R															
Initial value	0x0000															

bit	15	14	13	12	11	10	9	8	7	6	5	4	3	2	1	0
Field	Reserved												ADCINT			
Attribute	R												R			
Initial value	0x000												0000			

[bit31:4] Reserved: Reserved bits

"0" is read.

[bit3:0] ADCINT:

bit number	Value	Description
3	0	No interrupt request of conversion result comparison of A/D converter unit0
	1	Interrupt request of conversion result comparison of A/D converter unit0
2	0	No interrupt request of FIFO overrun of A/D converter unit0
	1	Interrupt request of FIFO overrun of A/D converter unit0
1	0	No interrupt request of scan conversion of A/D converter unit0
	1	Interrupt request of scan conversion of A/D converter unit0
0	0	No interrupt request of priority conversion of A/D converter unit0
	1	Interrupt request of priority conversion of A/D converter unit0

4.13. IRQ25 Batch Read Register (IRQ25MON)

IRQ25MON can batch-read the interrupt request assigned to interrupt vector No.41.

bit	31															16
Field	Reserved															
Attribute	R															
Initial value	0x0000															

bit	15	14	13	12	11	10	9	8	7	6	5	4	3	2	1	0
Field	Reserved										FRT0INT					
Attribute	R										R					
Initial value	0000000000										000000					

[bit31:6] Reserved: Reserved bits

"0" is read.

[bit5:0] FRT0INT:

bit number	Value	Description
5	0	No interrupt request of MFT unit0 free-run timer ch.2 zero detection
	1	Interrupt request of MFT unit0 free-run timer ch.2 zero detection
4	0	No interrupt request of MFT unit0 free-run timer ch.1 zero detection
	1	Interrupt request of MFT unit0 free-run timer ch.1 zero detection
3	0	No interrupt request of MFT unit0 free-run timer ch.0 zero detection
	1	Interrupt request of MFT unit0 free-run timer ch.0 zero detection
2	0	No interrupt request of MFT unit0 free-rum timer ch.2 peak value detection
	1	Interrupt request of MFT unit0 free-rum timer ch.2 peak value detection
1	0	No interrupt request of MFT unit0 free-rum timer ch.1 peak value detection
	1	Interrupt request of MFT unit0 free-rum timer ch.1 peak value detection
0	0	No interrupt request of MFT unit0 free-rum timer ch.0 peak value detection
	1	Interrupt request of MFT unit0 free-rum timer ch.0 peak value detection

4.14. IRQ26 Batch Read Register (IRQ26MON)

IRQ26MON can batch-read the interrupt request assigned to interrupt vector No.42.

IRQ26MON shows the state of the interrupt requests of MFT unit0 input capture ch.0 to ch.3.

bit	31															16
Field	Reserved															
Attribute	R															
Initial value	0x0000															

bit	15	14	13	12	11	10	9	8	7	6	5	4	3	2	1	0
Field	Reserved												ICU0INT			
Attribute	R												R			
Initial value	0x000												0000			

[bit31:4] Reserved: Reserved bits

"0" is read.

[bit3:0] ICU0INT:

bit number	Value	Description
3	0	No interrupt request of MFT unit0 input capture ch.3
	1	Interrupt request of MFT unit0 input capture ch.3
2	0	No interrupt request of MFT unit0 input capture ch.2
	1	Interrupt request of MFT unit0 input capture ch.2
1	0	No interrupt request of MFT unit0 input capture ch.1
	1	Interrupt request of MFT unit0 input capture ch.1
0	0	No interrupt request of MFT unit0 input capture ch.0
	1	Interrupt request of MFT unit0 input capture ch.0

4.15. IRQ27 Batch Read Register (IRQ27MON)

IRQ27MON can batch-read the interrupt request assigned to interrupt vector No.43.

bit	31															16
Field	Reserved															
Attribute	R															
Initial value	0x0000															

bit	15	14	13	12	11	10	9	8	7	6	5	4	3	2	1	0
Field	Reserved										OCU0INT					
Attribute	R										R					
Initial value	0000000000										000000					

[bit31:6] Reserved: Reserved bits

"0" is read.

[bit5:0] OCU0INT:

bit number	Value	Description
5	0	No interrupt request of MFT unit0 output compare ch.5
	1	Interrupt request of MFT unit0 output compare ch.5
4	0	No interrupt request of MFT unit0 output compare ch.4
	1	Interrupt request of MFT unit0 output compare ch.4
3	0	No interrupt request of MFT unit0 output compare ch.3
	1	Interrupt request of MFT unit0 output compare ch.3
2	0	No interrupt request of MFT unit0 output compare ch.2
	1	Interrupt request of MFT unit0 output compare ch.2
1	0	No interrupt request of MFT unit0 output compare ch.1
	1	Interrupt request of MFT unit0 output compare ch.1
0	0	No interrupt request of MFT unit0 output compare ch.0
	1	Interrupt request of MFT unit0 output compare ch.0

4.16. IRQ28 Batch Read Register (IRQ28MON)

IRQ28MON can batch-read the interrupt request assigned to interrupt vector No.44.

bit	31															16
Field	Reserved															
Attribute	R															
Initial value	0x0000															

bit	15	14	13	12	11	10	9	8	7	6	5	4	3	2	1	0
Field	BTINT															
Attribute	R															
Initial value	0x0000															

[bit31:16] Reserved: Reserved bits
"0" is read.

[bit15:0] BTINT:

bit number	Value	Description
15	0	No IRQ1 interrupt request of base timer ch.7
	1	IRQ1 interrupt request of base timer ch.7
14	0	No IRQ0 interrupt request of base timer ch.7
	1	IRQ0 interrupt request of base timer ch.7
13	0	No IRQ1 interrupt request of base timer ch.6
	1	IRQ1 interrupt request of base timer ch.6
12	0	No IRQ0 interrupt request of base timer ch.6
	1	IRQ0 interrupt request of base timer ch.6
11	0	No IRQ1 interrupt request of base timer ch.5
	1	IRQ1 interrupt request of base timer ch.5
10	0	No IRQ0 interrupt request of base timer ch.5
	1	IRQ0 interrupt request of base timer ch.5
9	0	No IRQ1 interrupt request of base timer ch.4
	1	IRQ1 interrupt request of base timer ch.4
8	0	No IRQ0 interrupt request of base timer ch.4
	1	IRQ0 interrupt request of base timer ch.4
7	0	No IRQ1 interrupt request of base timer ch.3
	1	IRQ1 interrupt request of base timer ch.3

bit number	Value	Description
6	0	No IRQ0 interrupt request of base timer ch.3
	1	IRQ0 interrupt request of base timer ch.3
5	0	No IRQ1 interrupt request of base timer ch.2
	1	IRQ1 interrupt request of base timer ch.2
4	0	No IRQ0 interrupt request of base timer ch.2
	1	IRQ0 interrupt request of base timer ch.2
3	0	No IRQ1 interrupt request of base timer ch.1
	1	IRQ1 interrupt request of base timer ch.1
2	0	No IRQ0 interrupt request of base timer ch.1
	1	IRQ0 interrupt request of base timer ch.1
1	0	No IRQ1 interrupt request of base timer ch.0
	1	IRQ1 interrupt request of base timer ch.0
0	0	No IRQ0 interrupt request of base timer ch.0
	1	IRQ0 interrupt request of base timer ch.0

As shown in Table 4-1, interrupt factors of IRQ0 and IRQ1 differ by base timer functions.

Table 4-1 Interrupt factors in each base timer function

Function	Interrupt factor IRQ0	Interrupt factor IRQ1
16-bit PWM timer	Detection of underflow/ Detection of duty match	Detection of timer start trigger
16-bit PPG timer	Detection of underflow	Detection of timer start trigger
16-/32-bit reload timer	Detection of underflow	Detection of timer start trigger
16-/32-bit PWC timer	Detection of overflow	Detection of measurement end

4.17. IRQ29 Batch Read Register (IRQ29MON)

IRQ29MON can batch-read the interrupt request assigned to interrupt vector No.45.

bit	31															16
Field	Reserved															
Attribute	R															
Initial value	0x0000															

bit	15	14	13	12	11	10	9	8	7	6	5	4	3	2	1	0
Field	Reserved											LCDCINT	Reserved			
Attribute	R											R	R			
Initial value	00000000000											0	0000			

[bit31:5] Reserved: Reserved bits
"0" is read.

[bit4] LCDCINT:

Value	Description
0	No LCDC interrupt request of LCD controller
1	LCDC interrupt request of LCD controller

[bit3:0] Reserved: Reserved bits
"0" is read.

4.18. IRQ30 Batch Read Register (IRQ30MON)

IRQ30MON can batch-read the interrupt request assigned to interrupt vector No.46.

bit	31															16
Field	Reserved															
Attribute	R															
Initial value	0x0000															

bit	15	14	13	12	11	10	9	8	7	6	5	4	3	2	1	0
Field	Reserved										RCEC0INT	Reserved				
Attribute	R										R	R				
Initial value	0000000000										0	00000				

[bit31:6] Reserved: Reserved bits

"0" is read.

[bit5] RCEC0INT:

Value	Description
0	No interrupt request of HDMI-CEC/ Remote controller reception ch.0
1	Interrupt request of HDMI-CEC/ Remote controller reception ch.0

[bit4:0] Reserved: Reserved bits

"0" is read.

4.19. IRQ31 Batch Read Register (IRQ31MON)

IRQ31MON can batch-read the interrupt request assigned to interrupt vector No.47.

bit	31															16
Field	Reserved															
Attribute	R															
Initial value	0x0000															

bit	15	14	13	12	11	10	9	8	7	6	5	4	3	2	1	0
Field	Reserved									RECE1INT	Reserved					
Attribute	R									R	R					
Initial value	000000000									0	000000					

[bit31:7] Reserved: Reserved bits
"0" is read.

[bit6] RCEC1INT:

Value	Description
0	No interrupt request of HDMI-CEC/ Remote controller reception ch.1
1	Interrupt request of HDMI-CEC/ Remote controller reception ch.1

[bit5:0] Reserved: Reserved bits
"0" is read.

5. Usage Precautions

When using the interrupt controller, note the following points.

- Interrupt request signals from each peripheral resource are notified by levels. To exit the interrupt process, make sure to clear the interrupt request.
- When other interruption with a high priority is processing, the interrupt request from peripheral functions notified to NVIC is pended inside NVIC. When canceling the interrupt request which was pended inside NVIC, clear the interrupt request from peripheral functions, and clear the interrupt request which was pended inside NVIC by the Interrupt Clear-Pending Registers (addresses: 0xE000E280 to 0xE000E29C) installed in the NVIC.
- NMIX pin is assigned to be used with a general port. The initial value after releasing reset is set as general port and the NMI input is masked. To use NMI, enable NMI in the port setting. For details, see the chapter "External Interrupt and NMI Control Block".
- For the correspondence of specific event detection registers in each peripheral resource and interrupt enable registers, see the chapters on each macro.

CHAPTER 8: External Interrupt and NMI Control Sections

This chapter explains the functions and operations of the external interrupt and NMI control sections.

1. Overview
2. Block Diagram
3. Operations and Setting Procedure Examples
4. Registers

1. Overview

The external interrupt and NMI control sections have the following features.

- Has up to 32 external interrupt input pins and one NMI input pin mounted.
- Possible to select the "H" level, "L" level, rising edge, or falling edge to detect an external interrupt.
- Possible to use an external interrupt input or NMI input to return from standby mode.

2. Block Diagram

The following shows the block diagram of the external interrupt and NMI control sections.

Figure 2-1 Block diagram of external interrupt and NMI control sections

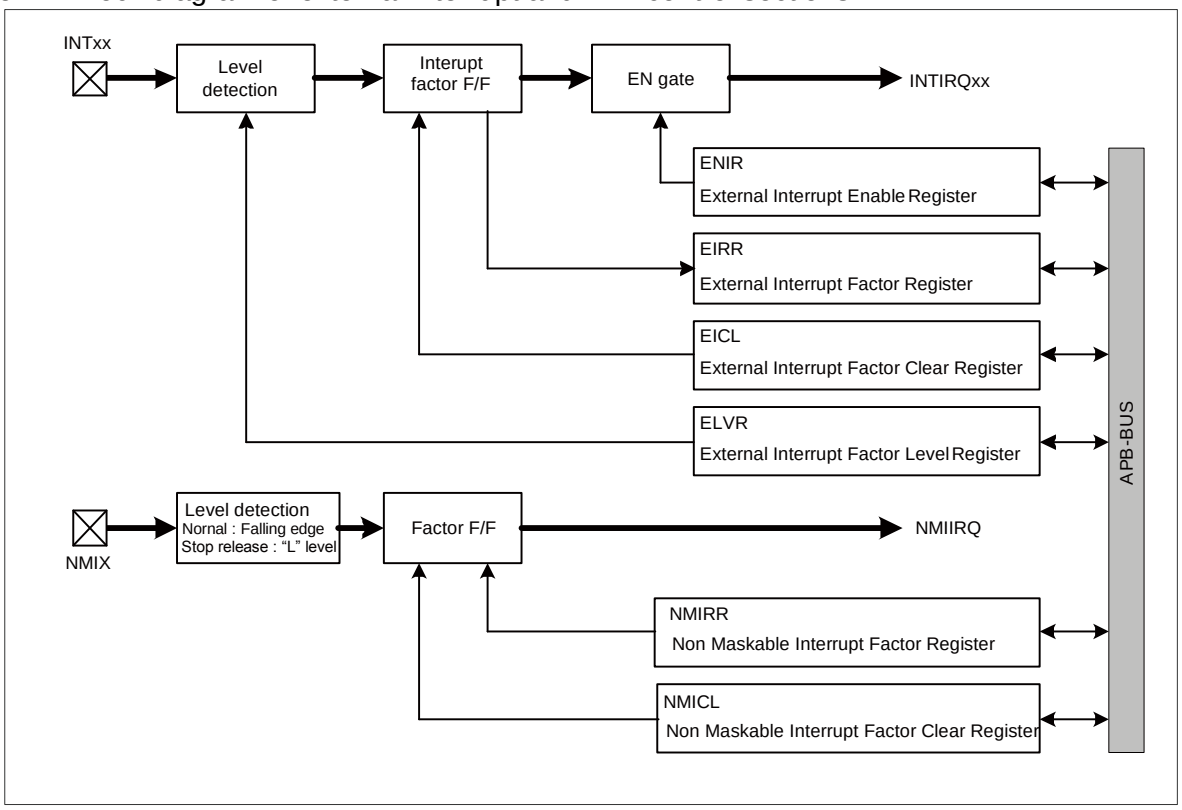

3. Operations and Setting Procedure Examples

This section explains operations and setting procedure examples.

3.1 Operations of External Interrupt Control Section
3.2 Operations of NMI Control Section
3.3 Returning from Timer, Stop, RTC Mode

3.1. Operations of External Interrupt Control Section

This section shows the operations of the external interrupt control section.

■ Overview of operations in external interrupt control section

The external interrupt control section outputs an external interrupt request to the interrupt controller in the following procedure.

1. The signal input to pin INTxx detects the edge or level specified in the External Interrupt Level Register (ELVR).
   The edge or level to be detected can be selected from the following four types:
   "H" level, "L" level, rising edge, falling edge
2. The detected interrupt input is held in the interrupt factor F/F.
   It is read with the External Interrupt Factor Register (EIRR).
   The held interrupt factor is cleared with the External Interrupt Factor Clear Register (EICL).
3. If an external interrupt is enabled with the External Interrupt Enable Register (ENIR), an external interrupt request (INTIRQxx) is output to the interrupt controller.

■ Setting procedure

Execute the following steps to configure external interrupt setting.

1. Disable an external interrupt with the External Interrupt Enable Register (ENIR).
2. Specify the detection condition (effective edge or level) with the External Interrupt Factor Level Register (ELVR).
3. Read the External Interrupt Factor Level Register (ELVR).
4. Clear the external interrupt factor with the External Interrupt Factor Clear Register (EICL).
5. Enable the external interrupt with the External Interrupt Enable Register (ENIR).

Figure 3-1 External interrupt setting procedure

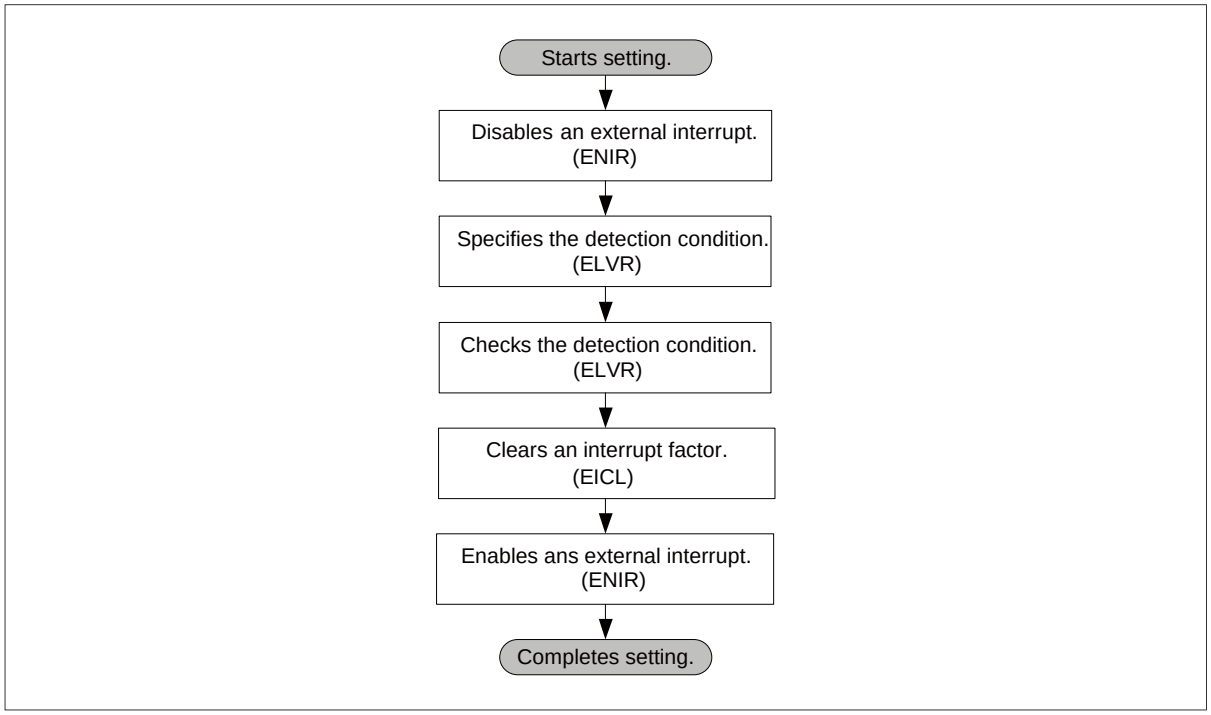

■ Canceling an external interrupt request

When the external interrupt detection condition is set to the "H" or "L" level, an interrupt factor is held in the External Interrupt Factor Register (EIRR) even if an external interrupt request input (INTxx) is canceled. Therefore, an external interrupt request (INTIRQxx) remains output to the interrupt controller.

Execute the following steps to cancel an external interrupt request.

1. Read the External Interrupt Factor Register (EIRR), and check the interrupt factor.
2. Write "0" to the corresponding bit in the External Interrupt Factor Clear Register (EICL) to clear it.
3. Read the External Interrupt Factor Register (EIRR), and check that the interrupt factor is cleared.

Figure 3-2 Clearing an interrupt factor

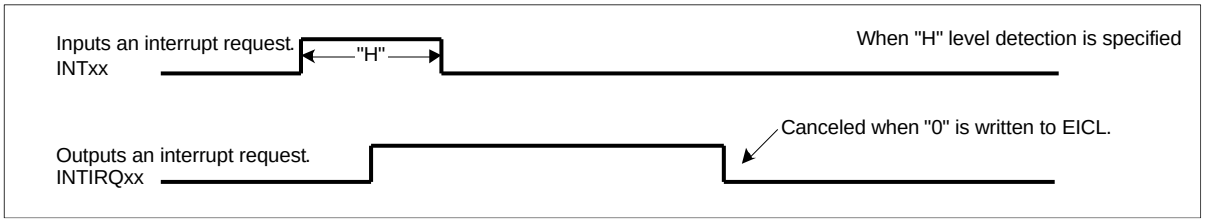

Figure 3-3 Canceling an external interrupt request

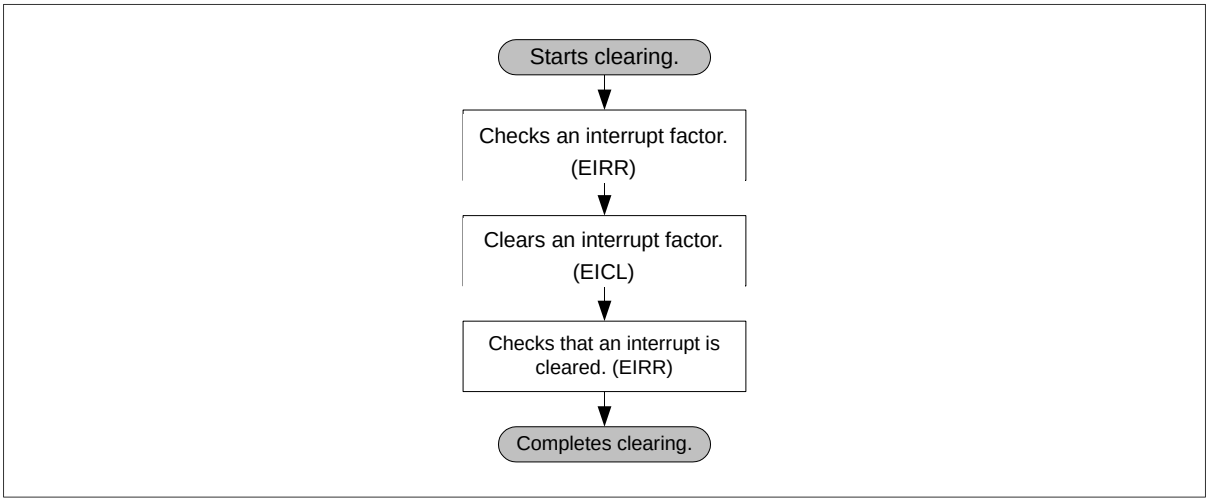

3.2. Operations of NMI Control Section

This section shows the operations of the NMI control section.

■ Overview of NMI control section

The NMI control section outputs an NMI interrupt request (NMIIRQ) to the CPU if the edge or level is detected from the signal input to the NMI input pin (NMIX).
The following edge or level is detected.

- Run mode: Falling edge
- Sleep mode: Falling edge
- Timer mode: "L" level
- RTC mode: "L" level
- Stop mode: "L" level
- Deep standby mode: NMI request is not available in this mode.

<Notes>

NMI request is not available for to return from Deep standby mode. However, NMIX input pin and WKUP input pin is shared to same input pin. Therefore, it is available for to return by WKUP input pin. For details, see “5.Operations in Deep Standby Modes” in "CHAPTER 6: Low Power Consumption Mode”.

■ Canceling an NMI request

To cancel an NMI request, clear the request register in the same way as for an external interrupt request.
Execute the following steps to cancel an NMI interrupt request.

1. Read the NMI Factor Register (NMIRR), and check the interrupt factor.
2. Write "0" to the corresponding bit in the NMI Factor Clear Register (NMICL) to clear it.
3. Read the NMI Factor Register (NMIRR), and check that the interrupt factor is cleared.

Figure 3-4 Canceling an NMI request

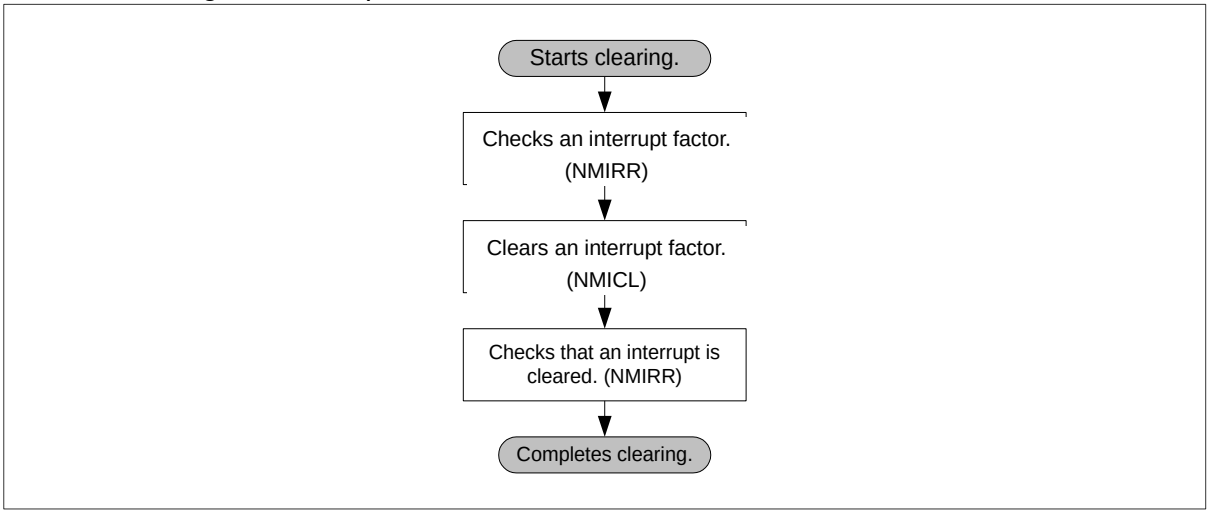

3.3. Returning from Timer, Stop, RTC Mode

This section shows a return from the timer, stop, RTC mode.

■ Overview

An external interrupt and NMI requests can be used to return from timer, stop, RTC mode.
In timer, stop or RTC mode, the signal first input to pin INTxx or NMIX is input asynchronously, and the device can return from these modes.

■ Setting before changing to the Timer, Stop, RTC mode

To use an external interrupt request, in the External Interrupt Enable Register (ENIR), specify the pin used to return from these modes and also specify the effective detection level before changing to these modes.

- Pin used to return from these modes. : Interrupt request output enable (ENIR = 1)
- Pin not used to return from these modes.: Interrupt request output disable (ENIR = 0)

To use an NMI request, only the "L" level is detected, and no register setting is required.

■ Returning from the Timer, Stop, RTC mode

For external interrupt request, if the pre-specified effective level is detected in the pin used to return from these modes, the device returns from these modes.
For NMI request, if the "L" level is detected in stop mode, the device returns from these modes.

■ Notes on returning from Timer, Stop, RTC mode

Any other external interrupt requests cannot be recognized until the oscillation stabilization wait time lapses after these modes were released.
(For INT01 in Figure 3-5, any external interrupt requests cannot be recognized.)
Therefore, to input an external interrupt after these modes were released, input an external interrupt signal after the oscillation stabilization wait time lapsed.

Figure 3-5 Returning from Timer, Stop, RTC mode

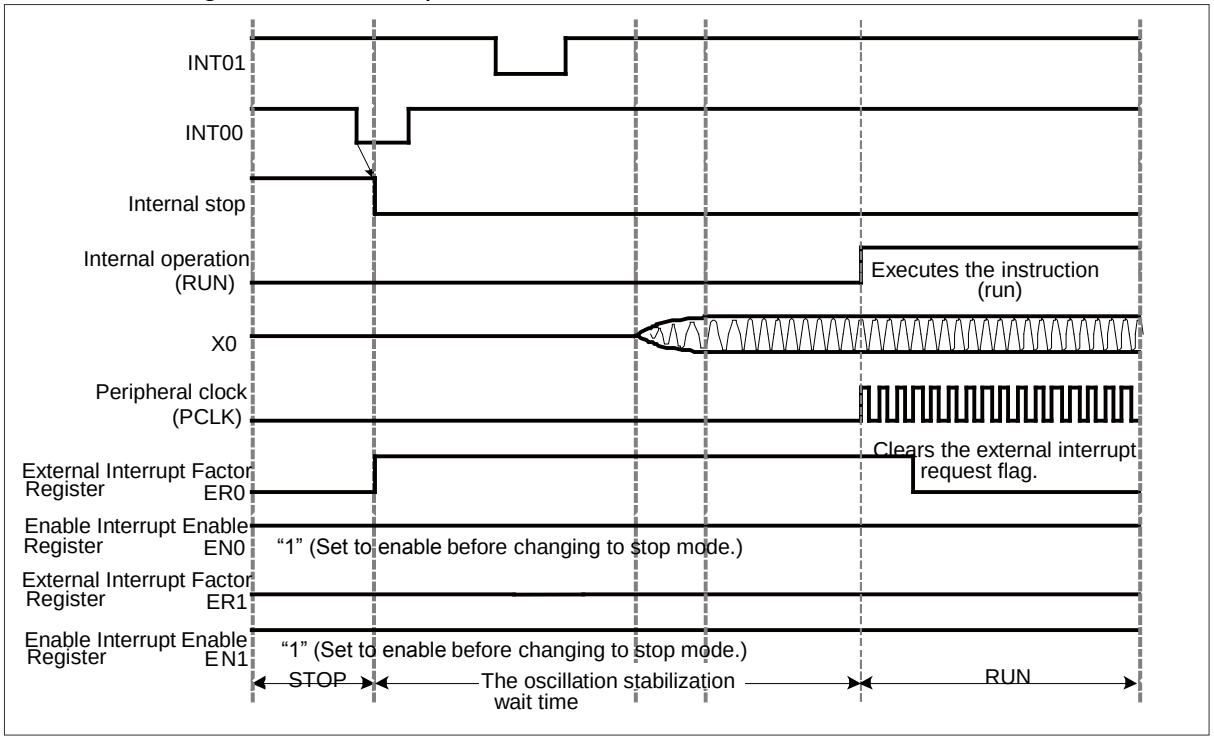

4. Registers

This section provides a list of registers.

■ Register list

The following shows a list of registers in the external interrupt and NMI control sections.

Table 4-1 Registers in external interrupt and NMI control sections

Abbreviation	Register name	Reference
ENIR	External Interrupt Enable Register	4.1
EIRR	External Interrupt Factor Register	4.2
EICL	External Interrupt Factor Clear Register	4.3
ELVR	External Interrupt Factor Level Register	4.4
ELVR1	External Interrupt Factor Level Register 1	4.5
NMIRR	Non Maskable Interrupt Factor Register	4.6
NMICL	Non Maskable Interrupt Factor Clear Register	4.7

4.1. External Interrupt Enable Register (ENIR)

The ENIR register is used to control masking an external interrupt request output.

■ Register configuration

bit	31															16
Field	EN[31:16]															
Attribute	R/W															
Initial value	0x0000															

bit	15															0
Field	EN[15:0]															
Attribute	R/W															
Initial value	0x0000															

■ Register functions

[bit31:0] EN31 to EN0: External interrupt enable bits

EN31 to EN0 bits correspond to pins INT31 to INT00.

It is not possible to set the bit corresponding to a pin that is not defined in the product specifications.

ENx	Description
0	Disables the output of an external interrupt request of INTx pin corresponding to the relevant bit.
1	Enables the output of an external interrupt request of INTx pin corresponding to the relevant bit.

This function enables the interrupt request output corresponding to the bit that is set to "1" in this register, and outputs a request to the interrupt controller. The pin corresponding to the bit that is set to "0" holds an interrupt factor, but outputs no request to the interrupt controller.

4.2. External Interrupt Factor Register (EIRR)

The EIRR register indicates that an external interrupt request is detected.

■ Register configuration

bit	31															16
Field	ER[31:16]															
Attribute	R															
Initial value	0xXXXX															

bit	15															0
Field	ER[15:0]															
Attribute	R															
Initial value	0xXXXX															

■ Register functions

[bit31:0] ER31 to ER0: External interrupt request detection bits

ER31 to ER0 bits correspond to pins INT31 to INT00.

The bit corresponding to a pin that is not defined in the product specifications is indefinite.

ERx	Function
0	Detects no external interrupt request of INTx pin corresponding to the relevant bit.
1	Detects an external interrupt request of INTx pin corresponding to the relevant bit.
Writing	No effect on operation

<Notes>

- When level detection is set with ELVR and while valid level is input from INTxx pin, clearing applicable bit (write "0") with the External Interrupt Factor Clear register (EICL) will reset "1" to applicable bit in the External Interrupt Factor Register (EIRR).
- As the initial values of GPIO are set to general purpose ports, applicable bit in the External Interrupt Factor Register (EIRR) may be set to "1". After set the GPIO to external interrupt pin, clear the External Interrupt Factor Register (EIRR).

4.3. External Interrupt Factor Clear Register (EICL)

The EICL register is used to clear the held interrupt factor.

■ Register configuration

bit	31															16
Field	ECL[31:16]															
Attribute	R/W															
Initial value	0xFFFF															

bit	15															0
Field	ECL[15:0]															
Attribute	R/W															
Initial value	0xFFFF															

■ Register functions

[bit31:0] ECL[31:0]: External interrupt factor clear bits

ECL[31:0] bits correspond to pins INT31 to INT00.

It is not possible to write "0" to the bit corresponding to a pin that is not defined in the product specifications.

ECLx	Function
When "0" is written	Clears an external interrupt factor of INTx pin corresponding to the relevant bit.
When "1" is written	No effect on operation
Reading	Always reads "1".

4.4. External Interrupt Factor Level Register (ELVR)

The ELVR is used to select the level or edge of the signal detected as an external interrupt request.

■ Register configuration

bit	31															16
Field	LB15	LA15	LB14	LA14	LB13	LA13	LB12	LA12	LB11	LA11	LB10	LA10	LB9	LA9	LB8	LA8
Attribute	R/W	R/W	R/W	R/W	R/W	R/W	R/W	R/W	R/W	R/W	R/W	R/W	R/W	R/W	R/W	R/W
Initial value	0	0	0	0	0	0	0	0	0	0	0	0	0	0	0	0

bit	15															0
Field	LB7	LA7	LB6	LA6	LB5	LA5	LB4	LA4	LB3	LA3	LB2	LA2	LB1	LA1	LB0	LA0
Attribute	R/W	R/W	R/W	R/W	R/W	R/W	R/W	R/W	R/W	R/W	R/W	R/W	R/W	R/W	R/W	R/W
Initial value	0	0	0	0	0	0	0	0	0	0	0	0	0	0	0	0

■ Register functions

[bit31:0] LA15 to LA0 or LB15 to LB0: External interrupt request detection level selection bits

LA15 to LA0 or LB15 to LB0 bits correspond to pins INT15 to INT00 on a 2-bit (LA and LB) basis. It is not possible to set the bit corresponding to a pin that is not defined in the product specifications. If the edge or level selected with this bit is detected, it is recognized as an external interrupt request.

LBx	LAx	Description
0	0	Detects the "L" level.
0	1	Detects the "H" level.
1	0	Detects the rising edge.
1	1	Detects the falling edge.

4.5. External Interrupt Factor Level Register 1 (ELVR1)

The ELVR is used to select the level or edge of the signal detected as an external interrupt request.

■ Register configuration

bit	31															16
Field	LB31	LA31	LB30	LA30	LB29	LA29	LB28	LA28	LB27	LA27	LB26	LA26	LB25	LA25	LB24	LA24
Attribute	R/W	R/W	R/W	R/W	R/W	R/W	R/W	R/W	R/W	R/W	R/W	R/W	R/W	R/W	R/W	R/W
Initial value	0	0	0	0	0	0	0	0	0	0	0	0	0	0	0	0

bit	15															0
Field	LB23	LA23	LB22	LA22	LB21	LA21	LB20	LA20	LB19	LA19	LB18	LA18	LB17	LA17	LB16	LA16
Attribute	R/W	R/W	R/W	R/W	R/W	R/W	R/W	R/W	R/W	R/W	R/W	R/W	R/W	R/W	R/W	R/W
Initial value	0	0	0	0	0	0	0	0	0	0	0	0	0	0	0	0

■ Register functions

[bit31:0] LA31 to LA16 or LB31 to LB16: External interrupt request detection level selection bits

LA31 to LA16 or LB31 to LB16 bits correspond to pins INT31 to INT16 on a 2-bit (LA and LB) basis.
It is prohibited to set the bit corresponding to a pin that is not defined in the product specifications.
If the edge or level selected with this bit is detected, it is recognized as an external interrupt request.

LBx	LAx	Description
0	0	Detects the "L" level.
0	1	Detects the "H" level.
1	0	Detects the rising edge.
1	1	Detects the falling edge.

4.6. Non Maskable Interrupt Factor Register (NMIRR)

The NMIRR Register indicates that a non maskable interrupt (NMI) request is detected.

■ Register configuration

bit	15		1	0
Field	Reserved			NR
Attribute	-			R
Initial value	-			0

■ Register functions

[bit15:1] Reserved: Reserved bits

The read value is undefined.

They have no effect in write mode.

[bit0] NR: NMI interrupt request detection bit

The NR bit corresponds to NMIX pin.

NR	Function
0	Detects no NMI interrupt request.
1	Detects an NMI interrupt request.
Writing	No effect on operation

<Notes>

When the I/O port which is mapped to NMI input pin is changed to GPIO or other peripheral function from NMI (write EPFR00.NMIS = 1), input level of the I/O port should be held high level, and change the I/O port. Internal NMI signal is tied to high level in case of the I/O port is selected to GPIO or other peripheral function. Therefore, when input level of the I/O port is low, to change the I/O port from GPIO or other peripheral function to NMI, is caused to change of internal NMI signal high to low. So, falling edge will be detected, NMI request occurred.

4.7. Non Maskable Interrupt Factor Clear Register (NMICL)

The NMICL register is used to clear the held interrupt factor.

■ Register configuration

bit	15	...	1	0
Field	Reserved			NCL
Attribute	-			R/W
Initial value	-			1

■ Register functions

[bit15:1] Reserved: Reserved bits

The read value is undefined.
They have no effect in write mode.

[bit0] NCL: NMI interrupt factor clear bit

The NCL bit corresponds to NMIX pin.

NCL	Function
When "0" is written	Clears an NMI interrupt factor.
When "1" is written	No effect on operation
Reading	Always reads "1".

<Notes>

- If ELVR is rewritten to change the detection condition, an invalid interrupt factor may occur.
  To avoid an invalid interrupt factor from occurring, keep the procedure shown in Figure 3-1 when changing the detection condition.
- To detect the edge or level specified in ELVR, at least 3T (T: PCLK cycle) is required as the pulse width.
  If a signal that does not satisfy the pulse width is input, it is not guaranteed that correct operations will be carried out.
- When level detection is specified in ELVR, the corresponding bit in the External Interrupt Factor Register (EIRR) is set to "1" again while the effective level is input from pin INTxx even if the corresponding bit is cleared (set to "0") with the External Interrupt Factor Clear Register (EICL).
- The NMI detection level setting register is not provided. In normal mode, the falling edge is detected.
  This register is used to return from stop mode when the "L" level is detected.
- NMI is targeted for non maskable interrupt, so an NMI Enable Interrupt Request Register is not provided.

CHAPTER 9: DMAC

This chapter explains DMAC.

1. Overview of DMAC
2. Configuration of DMAC
3. Functions and Operations of DMAC
4. DMAC Control
5. Registers of DMAC
6. Usage Precautions

1. Overview of DMAC

DMAC (Direct Memory Access Controller) is a function block that transfers data at high speed without CPU. Using DMAC improves the system performance.

■ Overview of DMAC

- DMAC has its own bus which is independent from the CPU bus; therefore, it allows for transfer operation even when the CPU bus is accessed.
- It consists of 8 channels enabled to execute 8 types of different DMA transfers independently from one another.
- It can set the address of the transfer destination, the address of the transfer source, the size of transfer data, the source of transfer request and the transfer mode, and control the start of transfer operation, the forced termination of transfer and the pause of transfer for each channel.
- It can control the batch start of transfers, the forced batch termination of transfers and the batch pause of transfers for all of the channels.
- When multiple channels are operating simultaneously, it can select the priority of such channel operations from the fixed method or the rotated method.
- It supports hardware DMA transfer using an interrupt signal from Peripherals.
- It complies with the system bus (AHB), supporting 32-bit address space (4Gbytes).

■ Overview of Functions of Each Channel

- The addresses of the transfer source and transfer destination can be incremented or fixed.
- Reload function for the addresses of the transfer source and transfer destination (i.e. function to return the values to the original settings upon completion of the transfer) is available.
- The size of data to be transferred can be selected from the following three specifications:
  Transfer data width : (Select from byte/half-word/word)
  Setting the number of blocks : (Select from 1 to 16)
  Setting the number of transfers : (Select from 1 to 65536)
  (For information about the difference between the number of blocks and the number of transfers, see "3 Functions and Operations of DMAC".)
- Whether or not to give notification of the successful completion of transfer and unsuccessful completion of transfer can be specified.
- Transfer mode can be selected from the following five types:
  Software-Block transfer
  Software-Burst transfer
  Hardware-Demand transfer
  Hardware-Block transfer
  Hardware-Burst transfer

■ Transfer Modes

Software transfer is a method used to start DMAC by direct instruction from CPU.

Hardware transfer is a method using an interrupt signal from a Peripheral as the DMAC transfer request signal to start DMAC directly when the Peripheral issues a transfer request.

Multifunction serial unit, USB unit and ADC unit directly instruct DMAC to start data transfer, when sending/receiving data or A/D conversion data needs to be transferred. External interrupt unit and Base timer unit directly instruct DMAC to start data transfer at a transfer timing. In either of the cases, data can be transferred without CPU by making such setting beforehand.

■ Abbreviations

This chapter contains the following terms: DE, DS, DH, PR, EB, PB, ST, IS, BC, TC, MS, TW, FS, FD, RC, RS, RD, EI, CI, SS, EM. All of these terms refer to each bit of DMAC control registers (DMACR, DMACSA, DMACDA, DMACA, DMACB). See "5 Registers of DMAC".

2. Configuration of DMAC

This section explains the system configuration of DMAC and the I/O pins of DMAC.

2.1 DMAC and System Configuration

2.2 I/O Signals of DMAC

2.1. DMAC and System Configuration

This section explains DMAC and its system configuration.

■ Block Diagram

Figure 2-1 shows a diagram of DMAC and its system configuration.

Figure 2-1 Block Diagram of DMAC and System Configuration

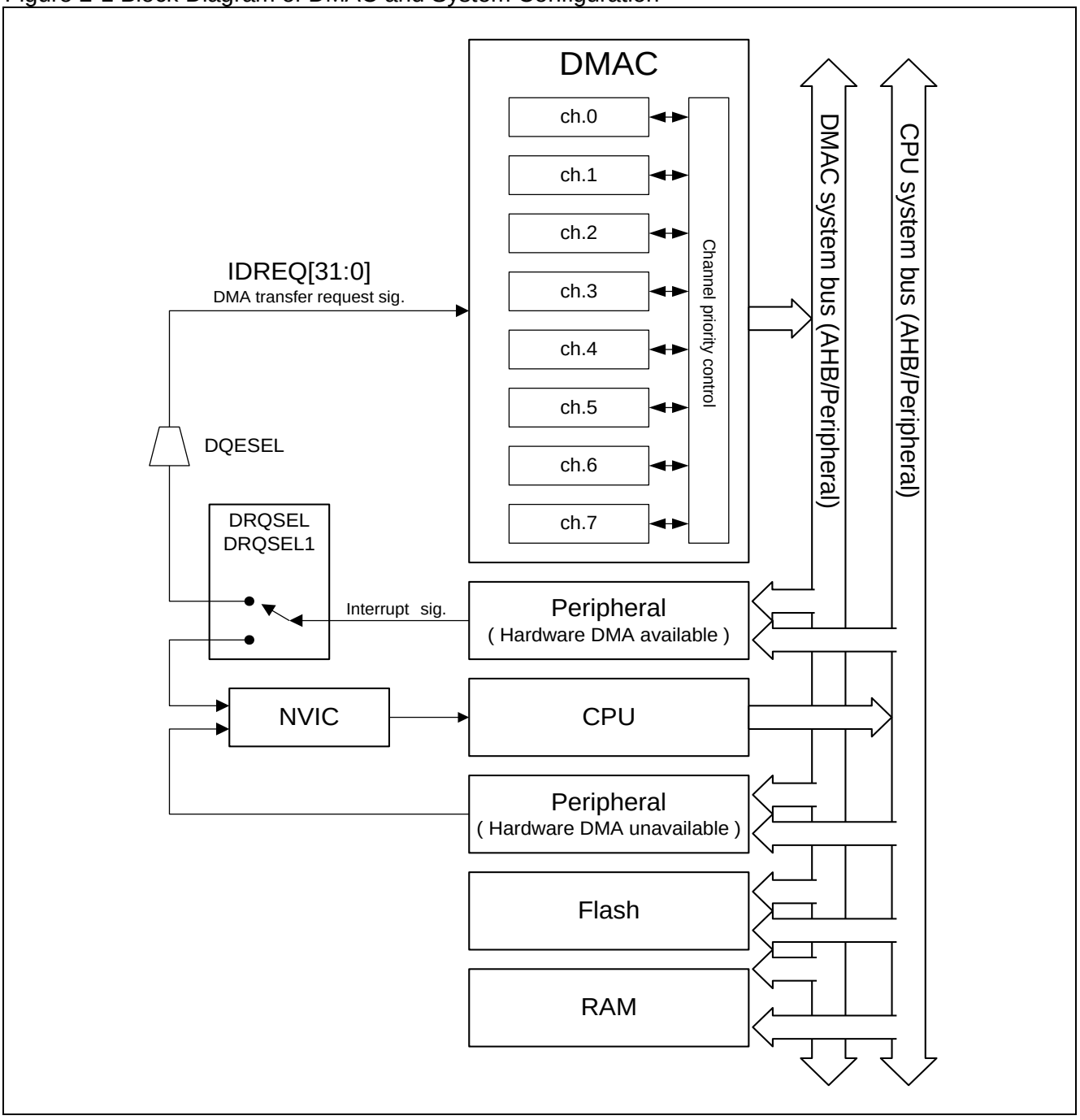

■ Explanation of Block Diagram

● DMAC

DMAC is in maximum 8-ch configuration. Each channel performs independent transfer. The priority controller controls the transfer operations of these channels, when there is a conflict among them.

● Connection to the system

The diagram of the system configuration in the figure has been simplified for explanation purposes. For more details, see the chapter " System Overview ". DMAC is connected to CPU, Flash, RAM and Peripherals via the system bus. It has its own bus that is independent from the CPU bus, allowing for transfer operation at CPU bus access. It accesses any address area in the system by specifying the address of transfer destination and transfer source for each channel in order to transfer data between the memory and Peripheral. Since some areas cannot be accessed from DMAC, check the memory map.

● Connection of the hardware transfer request signal

The interrupt signal from the Peripheral supporting hardware transfer is selected in the interrupt controller block (indicated as DRQSEL/DRQSEL1 in Figure 2-1) either to be used as the interrupt signal to CPU or the DMA transfer request signal to DMAC. For TYPE3 and TYPE7 products, see the chapter "Interrupts (C)".

When performing DMA transfer by hardware request, connect the interrupt signal from each Peripheral as the transfer request signal to DMAC in advance by setting DRQSEL/DREQSEL1. The interrupt signal from the Peripheral that does not support hardware transfer cannot be used as the DMA transfer request signal. When the interrupt signal is used as the transfer request signal to DMAC, it cannot be used as the interrupt signal to CPU. See the chapter "Interrupts".

There are 32 DMA transfer request signals to be input to DMAC. For the correspondence between each signal and Peripheral, see Table 2-1 in the next section. For the TYPE 2 product, the functions of MDA Transfer Request Signals can be extended by using the extension selector (referred to as "DQESLEL" in the figure) in MDA Transfer Request Signals. See Table 2-2 for details. For products other than TYPE 2 product, the function extension is not available. Interrupt signals from the peripheral that is not integrated cannot be selected. It should be noted that for a Peripheral with multiple channels and multiple interrupt factors, some interrupts support DMA transfer, while others don’t.

In the case of hardware transfer, each channel of DMAC selects one transfer request signal out of the above 32 transfer request signals in its operation. The IS register is used for the selection.

● Connection of the hardware transfer request clear signal

Some of the Peripherals that support hardware transfer are required to clear the transfer request signal (interrupt signal) after the completion of the transfer. Although it is not illustrated in Figure 2-1, the transfer request signal is cleared for such Peripherals via DMAC by selecting it by DRQSEL/DRQSEL1.

● Connection of the hardware transfer stop request signal

The multifunction serial unit (hereinafter abbreviated as "MFS") outputs the DMA transfer stop request signal. Although it is not illustrated in Figure 2-1, MFS’s transfer stop request signal is connected to DMAC, when MFS is selected by DRQSEL/DRQSEL1. When the transfer stop request signal is asserted, DMAC stops the transfer operation. It is configured to mask the succeeding transfer request signals.
Conditions that are asserted by MFS's transfer stop request signal show below.

- If received interrupts are enabled (SCR:RIE="1"), a received interrupt occurs (SSR:PE bit, FRE bit, or ORE bit is set to "1").

● Interrupt signal from DMAC

Although it is not illustrated in Figure 2-1, an interrupt signal used to give notification of transfer completion is connected to NVIC. Each channel has 8 interrupt outputs.

2.2. I/O Signals of DMAC

This section explains the I/O signals of DMAC.

■ Transfer Request Signals to be Input to DMAC

Table 2-1 shows a list of the transfer request signals to be input to DMAC and the interrupt signals from the corresponding Peripherals.

Table 2-1 List of Transfer Request Signals and Interrupt Signals from Corresponding Peripherals

IDREQ No.	Interrupt Signal of Corresponding Peripheral
0	Interrupt signal from EP1 DRQ of USB ch.0
1	Interrupt signal from EP2 DRQ of USB ch.0
2	Interrupt signal from EP3 DRQ of USB ch.0
3	Interrupt signal from EP4 DRQ of USB ch.0
4	Interrupt signal from EP5 DRQ of USB ch.0
5	Scan conversion interrupt signal from A/D converter unit0
6	Scan conversion interrupt signal from A/D converter unit1
7	Scan conversion interrupt signal from A/D converter unit2
8	Interrupt signal from IRQ0 of base timer ch.0
9	Interrupt signal from IRQ0 of base timer ch.2
10	Interrupt signal from IRQ0 of base timer ch.4 / A signal selected in extension selector 10*
11	Interrupt signal from IRQ0 of base timer ch.6 / A signal selected in extension selector 11*
12	Receiving interrupt signal from MFS ch.0
13	Sending interrupt signal from MFS ch.0
14	Receiving interrupt signal from MFS ch.1
15	Sending interrupt signal from MFS ch.1
16	Receiving interrupt signal from MFS ch.2
17	Sending interrupt signal from MFS ch.2
18	Receiving interrupt signal from MFS ch.3
19	Sending interrupt signal from MFS ch.3
20	Receiving interrupt signal from MFS ch.4
21	Sending interrupt signal from MFS ch.4
22	Receiving interrupt signal from MFS ch.5
23	Sending interrupt signal from MFS ch.5
24	Receiving interrupt signal from MFS ch.6 / A signal selected in extension selector 24*
25	Sending interrupt signal from MFS ch.6 / A signal selected in extension selector 25*
26	Receiving interrupt signal from MFS ch.7 / A signal selected in extension selector 26*
27	Sending interrupt signal from MFS ch.7 / A signal selected in extension selector 27*
28	Interrupt signal from external interrupt unit ch.0
29	Interrupt signal from external interrupt unit ch.1
30	Interrupt signal from external interrupt unit ch.2 / A signal selected in extension selector 30
31	Interrupt signal from external interrupt unit ch.3 / A signal selected in extension selector 31

*: The ectension selector is availble only for TYPE2 products.

■ Function of extension selector

In TYPE2 product, transfer request signals input in IDREQ [10], [11], [24], [25], [26], [27], [30], and [31] of the DMAC are selected from the signals shown in Table 2-2 below by the extension selector. The sign of "○" in the table shows that it can be selected. The sign of "×" shows that it cannot be selected. See the chapter "Interrupts".

Table 2-2 Selection of interrupt signals by extension selector

IDREQ No. / Peripheral interrupt signal name	[10]	[11]	[24]	[25]	[26]	[27]	[30]	[31]
Base timer ch.4 Interrupt signal of IRQ0	○	×	×	×	×	×	×	×
Base timer ch.6 Interrupt signal of IRQ0	×	○	×	×	×	×	×	×
MFS ch.6 Receive interrupt signal	×	×	○	×	×	×	×	×
MFS ch.6 Send interrupt signal	×	×	×	○	×	×	×	×
MFS ch.7 Receive interrupt signal	×	×	×	×	○	×	×	×
MFS ch.7 Send interrupt signal	×	×	×	×	×	○	×	×
External interrupt unit ch.2 Interrupt signal	×	×	×	×	×	×	○	×
External interrupt unit ch.3 Interrupt signal	×	×	×	×	×	×	×	○
USB ch.1 EP1 DRQ interrupt signal	○	○	○	○	○	○	○	○
USB ch.1 EP2 DRQ interrupt signal	○	○	○	○	○	○	○	○
USB ch.1 EP3 DRQ interrupt signal	○	○	○	○	○	○	○	○
USB ch.1 EP4 DRQ interrupt signal	○	○	○	○	○	○	○	○
USB ch.1 EP5 DRQ interrupt signal	○	○	○	○	○	○	○	○

■ Interrupt Signals Output from DMAC

Table 2-3 shows a list of the interrupt signals output from DMAC.

Table 2-3 List of Interrupt Signals from DMAC

Name of Interrupt Signal	Interrupt Factor Register	Interrupt Enable Register	Interrupt Type
DIRQ0	DMACB0:SS[2:0]	DMACB0:CI	ch.0 successful transfer completion interrupt
		DMACB0:EI	ch.0 unsuccessful transfer completion interrupt
DIRQ1	DMACB1:SS[2:0]	DMACB1:CI	ch.1 successful transfer completion interrupt
		DMACB1:EI	ch.1 unsuccessful transfer completion interrupt
DIRQ2	DMACB2:SS[2:0]	DMACB2:CI	ch.2 successful transfer completion interrupt
		DMACB2:EI	ch.2 unsuccessful transfer completion interrupt
DIRQ3	DMACB3:SS[2:0]	DMACB3:CI	ch.3 successful transfer completion interrupt
		DMACB3:EI	ch.3 unsuccessful transfer completion interrupt
DIRQ4	DMACB4:SS[2:0]	DMACB4:CI	ch.4 successful transfer completion interrupt
		DMACB4:EI	ch.4 unsuccessful transfer completion interrupt
DIRQ5	DMACB5:SS[2:0]	DMACB5:CI	ch.5 successful transfer completion interrupt
		DMACB5:EI	ch.5 unsuccessful transfer completion interrupt
DIRQ6	DMACB6:SS[2:0]	DMACB6:CI	ch.6 successful transfer completion interrupt
		DMACB6:EI	ch.6 unsuccessful transfer completion interrupt
DIRQ7	DMACB7:SS[2:0]	DMACB7:CI	ch.7 successful transfer completion interrupt
		DMACB7:EI	ch.7 unsuccessful transfer completion interrupt

Reference: Interrupt Generation Factors and Clearing (For details, see "4 DMAC Control".)

Interrupt from each channel is generated by the following factors:

- Upon the successful completion of channel transfer, "101" is set to SS[2:0] of the channel. If the above value is set to SS[2:0] with CI=1 (successful transfer completion interrupt enabled), a successful transfer completion interrupt occurs.
- Upon the unsuccessful completion of channel transfer, "001", "010", "011" and "100" are set to SS[2:0] of the channel. If the above value is set to SS[2:0] with EI=1 (unsuccessful transfer completion interrupt enabled), an unsuccessful transfer completion interrupt occurs.
- The successful transfer completion interrupt and the unsuccessful transfer completion interrupt undergo logic OR; therefore, if either of the interrupts occurs, an interrupt occurs from the channel.

Interrupt from each channel can be cleared by writing "000" to SS[2:0].

3. Functions and Operations of DMAC

This section explains the operations of DMAC in each transfer mode.

3.1 Software-Block Transfer

3.2 Software-Burst Transfer

3.3 Hardware-Demand Transfer

3.4 Hardware-Block Transfer & Burst Transfer

3.5 Channel Priority Control

3.1. Software-Block Transfer

This section explains Software-Block transfer.

Figure 3-1 shows an example of the operation of Software-Block transfer. In Figure 3-1, the following settings apply.

- Transfer mode: Software request Block transfer (ST=1, IS[5:0]=000000, MS=00)
- Transfer source start address: SA(DMACSA=SA)
- Transfer source address control: Increment and reload available (FS=0, RS=1)
- Transfer destination start address: DA(DMACDA=DA)
- Transfer destination address control: Increment and reload not available (FD=0, RD=0)
- Transfer data size: Half-word (16 bits), the number of blocks = 2, the number of transfers = 3 (TW=01, BC=1, TC=2)
- BC/TC reload: Reload available (RC=1)

Figure 3-1 Example of Operation of Software-Block Transfer

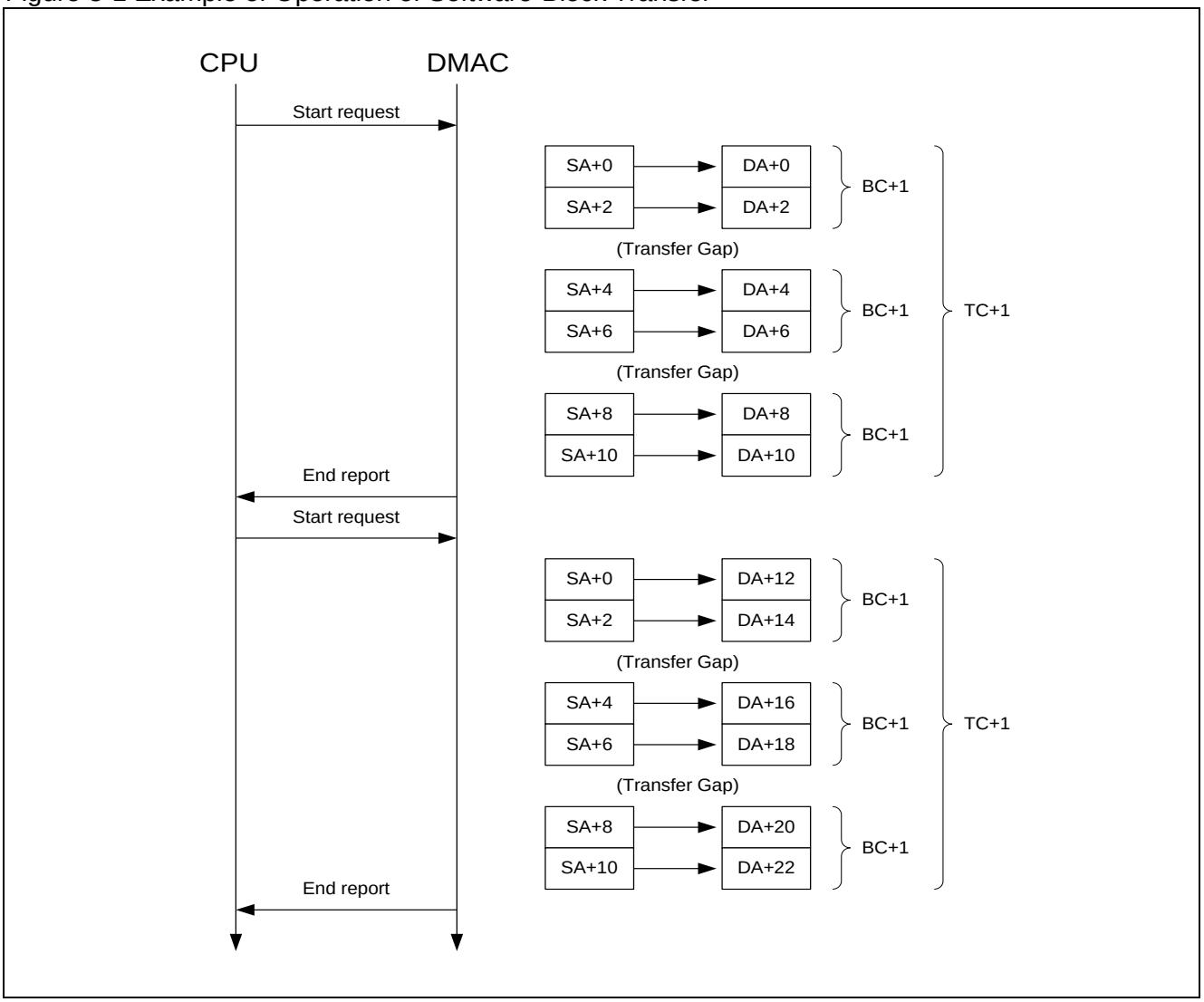

DMAC performs the following operation, when the transfer content is set from CPU and then the start of the transfer is instructed.

- Due to the specification of the transfer data width, each transfer is performed by half-word (16 bits).
- According to the start addresses of the transfer source and transfer destination, the data width and the incremented/fixed specification, the transfer is performed in the area from the address SA to address DA, for the number of blocks (=BC+1).
- In the case of Block transfer, a Transfer Gap occurs every time transfer of one block is completed.
- DMAC performs data transfer for the number of blocks (=BC+1) by the number of transfers (=TC+1). The size of data to be transferred by each transfer request from CPU is "Data width (TW) × Number of blocks (BC+1) × Number of transfers (TC+1)".
- Once the transfer is completed, DMAC notifies CPU of the completion.
- If the start of transfer is instructed again after the completion of the transfer, the transfer is restarted from the previous transfer start address (SA+0), because the transfer source address has been set to be reloaded (RS=1). As the transfer destination address has not been specified to be reloaded (RD=0), the transfer is started from the next address (DA+12) after the previous transfer end address. Also, as the reload of BC/TC has been specified, the same values as for the previous transfer are reloaded for the number of blocks and the number of transfers for the next transfer.

Transfer Gap is a time period during which no transfer is performed, and it is inserted to prevent one of the DMAC channels from taking the possession of the system bus access right. If multiple channels have transfer requests, DMAC switches the channels that will perform the transfer operation at the timing of the Transfer Gap. The frequency of Transfer Gap generation can be controlled by adjusting the settings of BC and TC.

Moreover, the bus access right is also passed on to CPU at the Transfer Gap timing. System buses in this product are in Multi-layered configuration with a special system bus dedicated to DMA. For this reason, if there is no conflict between CPU and the destination of access, transfer can be performed at the same time as the CPU operation. Even if there is a conflict between CPU and the destination of access, the CPU operation is little affected, as long as the DMAC transfer is in a different address area group (RAM and Peripheral, or Flash memory and RAM, etc). However, if the transfer is in the same address area group (RAM and RAM, etc.), the CPU operation and/or system performance may be affected, depending on the number of blocks used; therefore, attention must be paid.

("Address area group" mentioned above refers to a group of address areas that are connected on the AHB system bus with the same bus bridge.)

3.2. Software-Burst Transfer

This section explains Software-Burst transfer.

Figure 3-2 shows an example of the operation of Software-Burst transfer. In Figure 3-2, the following settings apply.

- Transfer mode : Software request Burst transfer (ST=1, IS[5:0]=000000, MS=01)
- Transfer source start address : SA(DMACSA=SA)
- Transfer source address : Fixed, reload available (FS=1, RS=1)
- Transfer destination start address : DA(DMACDA=DA)
- Transfer destination address : Increment and reload not available (FD=0, RD=0)
- Transfer data size : Word (32 bits), the number of blocks =3, the number of transfers =2 (TW=10, BC=2, TC=1)
- Reload of the number of transfers : Number of transfers to be reloaded (RC=1)

Figure 3-2 Example of Operation of Software-Burst Transfer

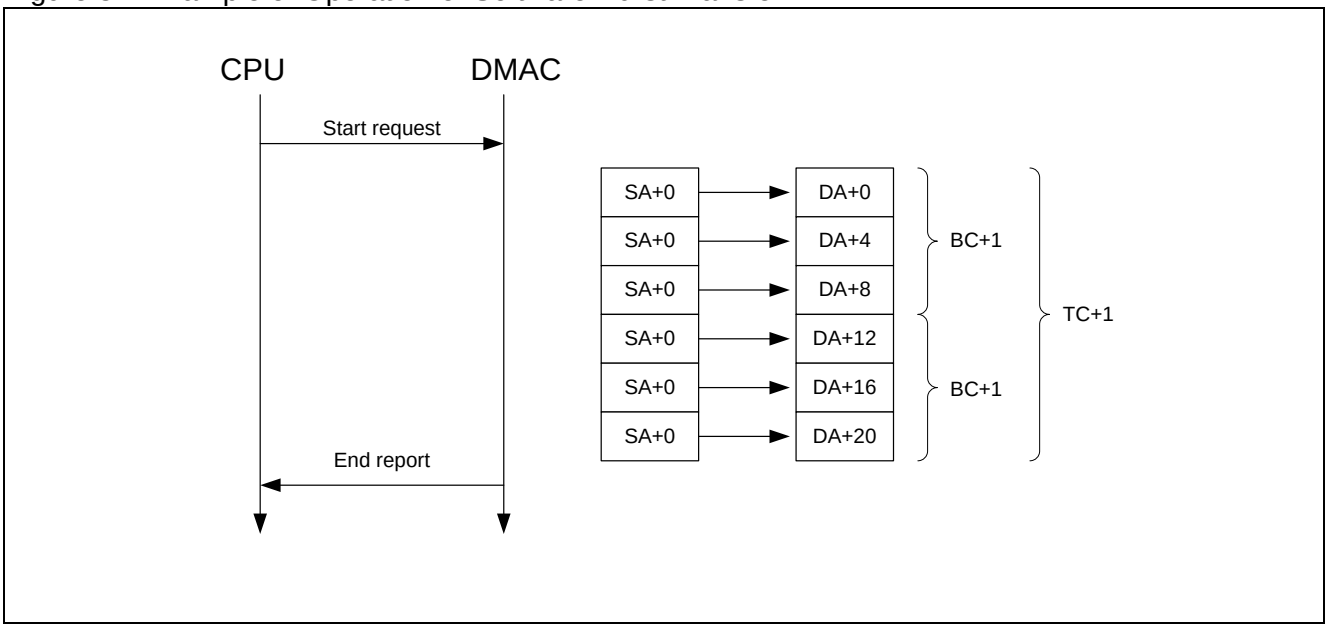

DMAC performs the following operation, when the transfer content is set from CPU and then the start of the transfer is instructed.

- Due to the specification of the transfer data width, each transfer is performed by word (32 bits).
- According to the start addresses of the transfer source and transfer destination, the data width and the incremented/fixed specification, the transfer is performed in the area from the address SA to address DA, for the number of blocks (=BC+1). As the transfer source address is specified to be fixed, it is the same as the transfer source start address (SA+0).
- In the case of Burst transfer, the transfer is executed continuously without generating Transfer Gaps.
- DMAC performs data transfer for the number of blocks (=BC+1) by the number of transfers (=TC+1). The size of data to be transferred by each transfer request from CPU is "Data width (TW) × Number of blocks (BC+1) × Number of transfers (TC+1)".
- When the transfer is completed, DMAC notifies CPU of the completion.

In the case of Burst transfer, no Transfer Gap is generated, unlike the Block transfer. As the channel to be controlled takes the possession of the system bus access right, it can be used to put the priority on that particular channel.

3.3. Hardware-Demand Transfer

This section explains Hardware-Demand transfer.

Hardware-Demand transfer is used when performing DMA transfer by the transfer request signal from the Peripherals of USB, MFS and ADC.

Hardware-Demand transfer is a method used to receive the transfer request signal from Peripherals on a signal level. If the transfer request signal is on High level, transfer is executed. If the transfer request signal is on Low level, no transfer is executed. Transfer is executed by setting the output of the interrupt signal from each Peripheral to High level (with interrupt request) when transfer data exists, or to Low level (without transfer request) when no transfer data exists.

In the case of Hardware-Demand transfer, always specify "1" (BC=0) as the number of blocks.

Figure 3-3 shows an example of the operation of Hardware-Demand transfer. In this example, the following settings apply. The settings of the addresses of the transfer source and transfer destination as well as the transfer data width are omitted.

- Transfer mode : Hardware-Demand transfer
  (ST=0, IS= Peripheral at the transfer request source, MS=10)
- Transfer data size : Number of blocks = 1, Number of transfers = 3 (BC=0, TC=2)

Figure 3-3 Example of Operation of Hardware-Demand Transfer

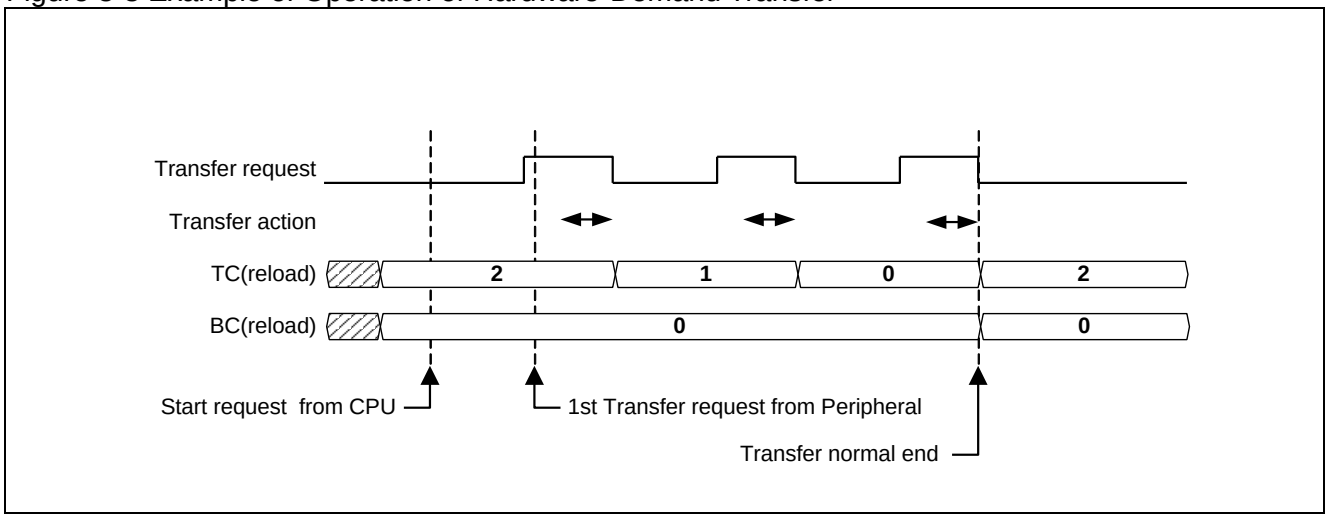

The operation of Hardware-Demand transfer is as follows:

The start of the operation is instructed by specifying the transfer content from CPU. DMAC waits for a transfer request from the Peripheral. After receiving the transfer request, it performs one transfer and then waits for the next transfer request. During the wait period, a Transfer Gap is generated. Every time a transfer request is received, it performs the same operation for the number of transfers (TC+1). The total number of transfers to be performed is (TC+1). Match the number of transfer requests from the Peripheral and the number of DMAC transfers (TC+1). Once all of the transfers are completed, DMAC notifies CPU of the completion.

3.4. Hardware-Block Transfer & Burst Transfer

This section explains Hardware-Block transfer and Burst transfer.

Hardware-Block transfer or Hardware-Burst transfer is used when performing DMA transfer by the transfer request signal from the Peripheral of the base timer or external interrupt.

Hardware-Block transfer and Hardware-Burst transfer are methods used to receive the transfer request signal at the rising edge of the signal. Transfer is executed, when the rising edge of the transfer request signal is detected. DMAC's transfer start timing can be specified by the output of the interrupt signal from each Peripheral.

Figure 3-4 shows an example of the operation of Hardware-Block transfer. In Figure 3-4e, the following settings apply. The settings of the addresses of the transfer source and transfer destination as well as the transfer data width are omitted.

- Transfer mode: Hardware-Block transfer
  (ST=0, IS= Peripheral at the transfer request source, MS=00)
- Transfer data size: Number of blocks = 4, Number of transfers = 3 (BC=3, TC=2)

Figure 3-4 Example of Operation of Hardware-Block Transfer

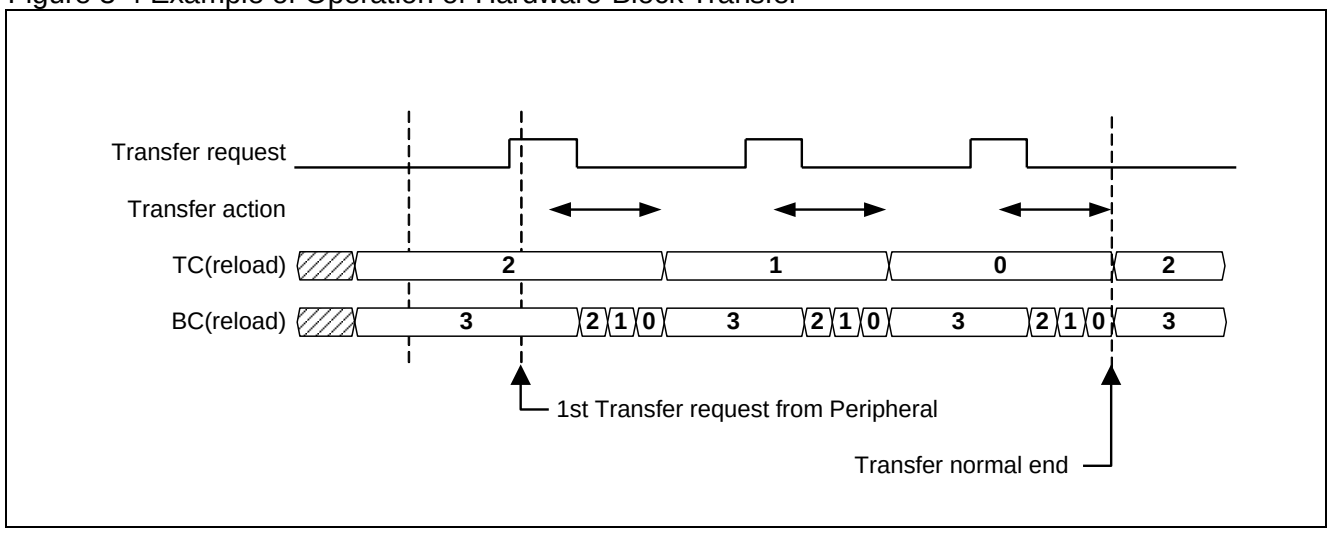

The operation of Hardware-Block transfer is as follows:

The start of the operation is instructed by specifying the transfer content from CPU. DMAC waits for a transfer request from the Peripheral. After receiving the transfer request, it performs transfers for the number of blocks (=BC+1) and then waits for the next transfer request. During the wait period, a Transfer Gap is generated. Every time a transfer request is received, it performs the same operation for the number of transfers (TC+1). The total number of transfers to be performed is (BC+1) × (TC+1). Match the number of transfer requests from the Peripheral and the number of DMAC transfers (TC+1). Once all of the transfers are completed, DMAC notifies CPU of the completion.

Figure 3-5 shows an example of the operation of Hardware-Burst transfer. In Figure 3-5, the following settings apply. The settings of the addresses of the transfer source and transfer destination as well as the transfer data width are omitted.

- Transfer mode : Hardware-Burst transfer
  (ST=0, IS= Peripheral at the transfer request source, MS=01)
- Transfer data size : Number of blocks =4, Number of transfers = 5 (BC=3, TC=4)

Figure 3-5 Example of Operation of Hardware-Burst Transfer

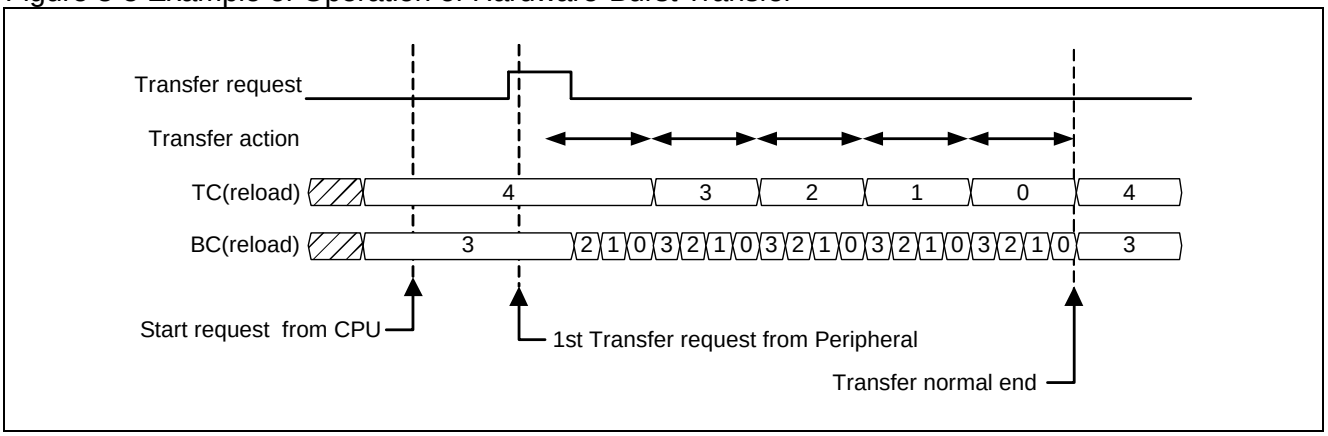

The operation of Hardware-Burst transfer is as follows:

The start of the operation is instructed by specifying the transfer content from CPU. DMAC waits for a transfer request from the Peripheral. After receiving the first transfer request, it performs all of the transfers for the number of times calculated by (BC+1) × (TC+1). During the Hardware-Burst transfer, no Transfer Gap is generated. Once all of the transfers are completed, DMAC notifies CPU of the completion.

3.5. Channel Priority Control

This section explains the channel priority control.

■ Channel Priority Control

If multiple channels have transfer requests, DMAC switches the channel subject to the transfer among them at the timing of the Transfer Gap of each channel. At this point, the next channel to which the transfer will be performed is determined according to the priority control. The priority control can be selected from either fixed priority or rotated priority by the PR. Figure 3-6 shows an explanatory diagram. In this figure, the X axis indicates the time axis. The arrows indicate transfer timings of each channel to perform its transfer operation when all of the channels issue transfer requests simultaneously.

■ Operation in Fixed Priority Mode (PR=0)

In fixed priority mode, the channel with the smallest channel number among all the channels with a transfer request has the priority to perform transfer operation.

(Priority order: ch.0 > ch.1 > ch.2 > ch.3 > ch.4 > ch.5 > ch.6 > ch.7)

First, the channel with the highest priority performs its transfer (ch.0 in Figure 3-6). As the channel with the highest priority halts the transfer operation at the timing of a Transfer Gap, then, the channel with the second highest priority performs its transfer operation (ch.1 in Figure 3-6). For this reason, the channels with the highest and the second highest priority perform the transfer operations alternately. After that, when the channel with higher priority completes its transfer, the channel with lower priority starts its transfer operation (ch.3 in Figure 3-6).

■ Operation in Rotated Priority Mode (PR=1)

In rotate priority mode, all channels perform their transfer operations equally.

Figure 3-6 Explanatory Diagram of Channel Priority Control

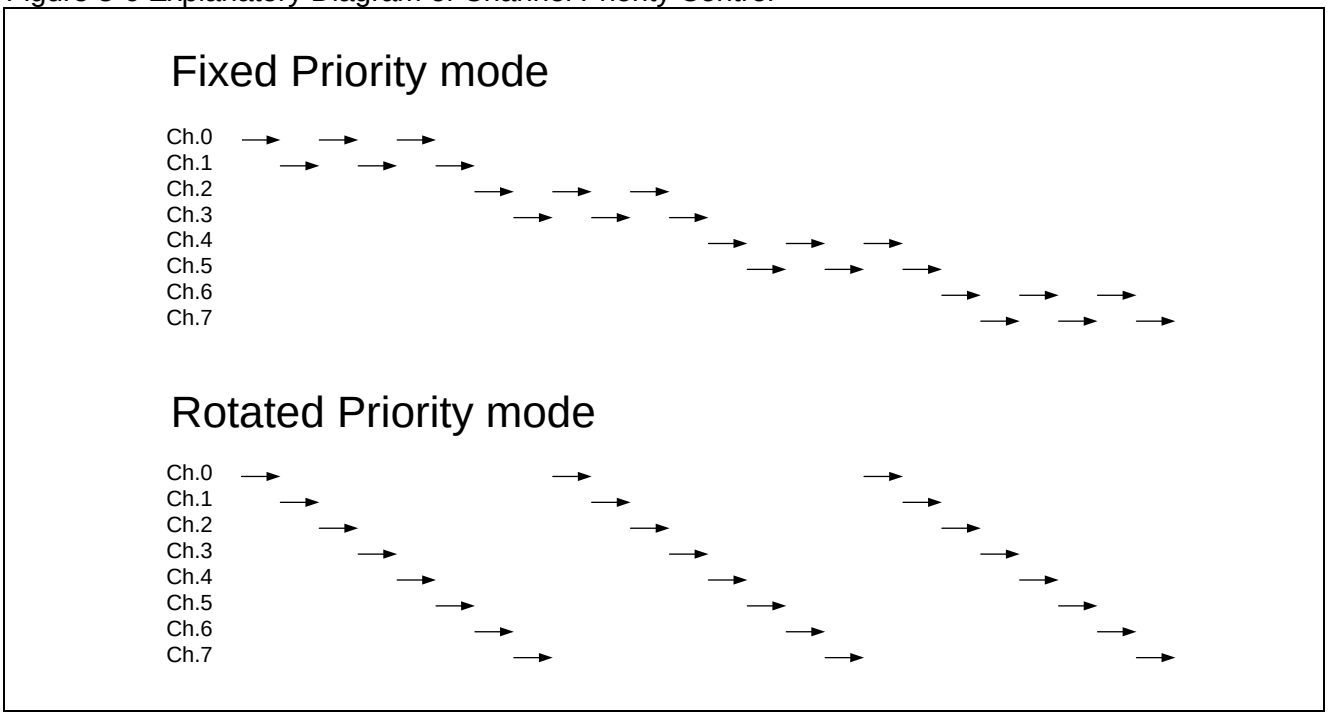

4. DMAC Control

This section explains DMAC control methods in details.

4.1 Overview of DMAC Control

4.2 DMAC Operation and Control Procedure for Software Transfer

4.3 DMAC Operation and Control Procedure for Hardware (EM=0) Transfer

4.4 DMAC Operation and Control Procedure for Hardware (EM=1) Transfer

4.1. Overview of DMAC Control

This section provides an overview of DMAC control.

The control register of each channel of DMAC has EB (individual-channel operation enable bit) and PB (individual-channel pause bit). By manipulating these bits, the start of DMA transfer operation (operation enabled), the forced termination of transfer operation (operation disabled) and the pause of transfer operation can be controlled by channel. The control register also has DE (all-channel operation enable bit) and DH (all-channel pause bit), which allow the transfer operations of all channels to be controlled at once.

Each channel is originally in the operation-prohibited state (Disable state) in which the transfer content (the address of the transfer source, the address of the transfer destination, the transfer data width, the number of transfers, the transfer mode, etc.) are specified for each channel to its configuration register. Then, the transfer operations are controlled by writing to EB, PB, DE and DH to instruct the transfer operations to be started or paused.

Once each channel completes its transfer, it sets the end code to SS (Stop Status) to give the notification of its stop state. An interrupt can be generated upon the completion of transfer. After the transfer ends, each channel clears EB and PB and returns to the operation-prohibited state (Disable state).

The following sections describe the operations of and control procedures for DMA transfer by software request and hardware DMA transfer by transfer request from Peripherals.
The following terms are used in the explanations as instructions from CPU, which refer to writing the following values to the EB, PB, DE and DH bits.

- Instruction to enable individual-channel operation (write EB=1, PB=0)
- Instruction to disable individual-channel operation (write EB=0)
- Instruction to pause individual-channel operation (write EB=1, PB=1)
- Instruction to enable all-channel operation (write DE=1, DH=0000)
- Instruction to disable all-channel operation (write DE=0)
- Instruction to pause all-channel operation (write DE=1, DH!=0000)

4.2. DMAC Operation and Control Procedure for Software Transfer

This section explains DMAC operation and control procedure for software transfer.

Figure 4-1 Transitional Diagram of Software DMA Transfer State

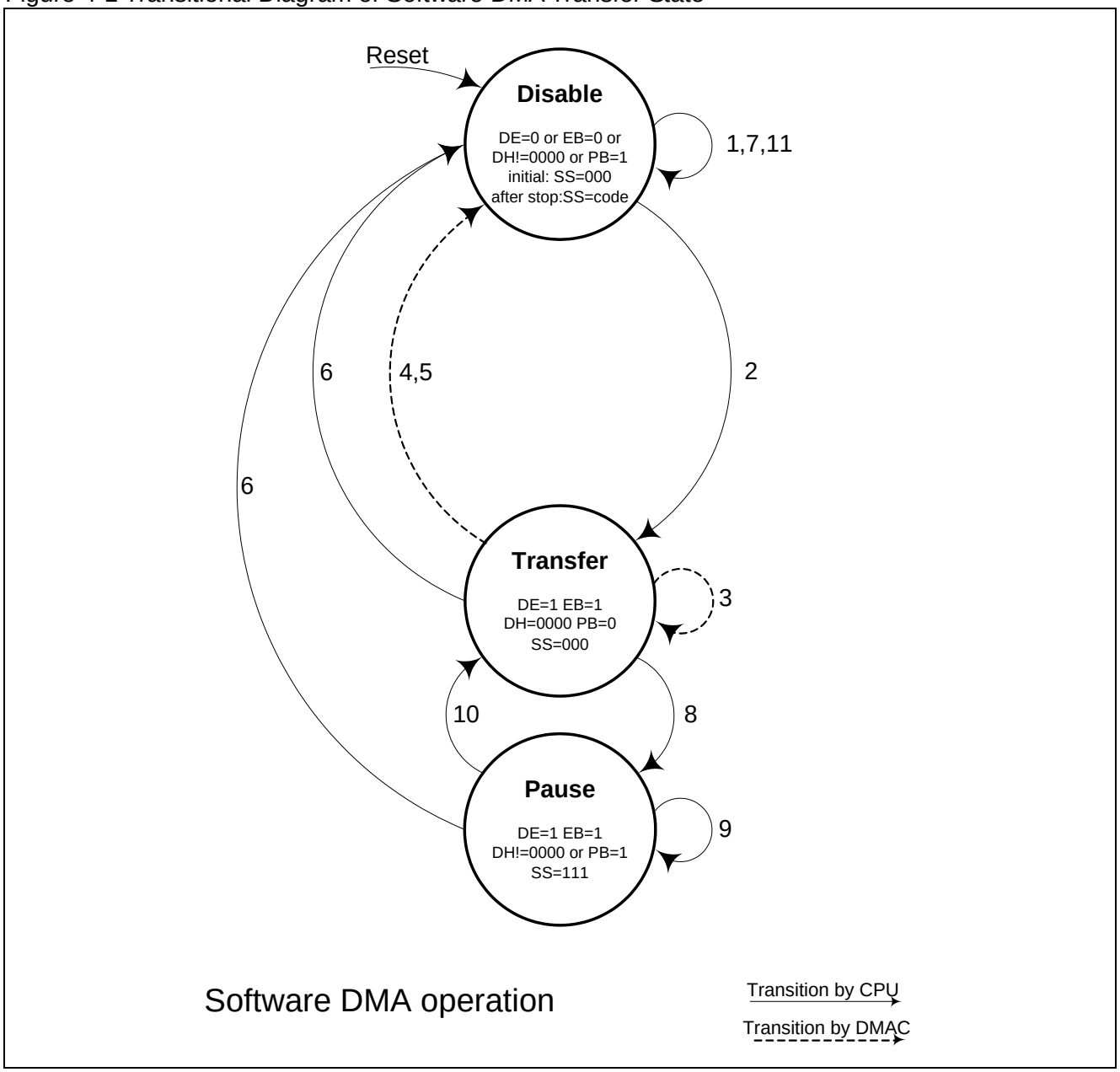

Figure 4-1 shows a transitional diagram of the states of the channel to be controlled for software transfer. The numbers next to the transitional lines in the figure correspond to the numbers which appear in the following control procedures. The solid transitional lines indicate transitions of state instructed by CPU, while the broken transitional lines indicate transitions of state due to DMAC operation.

■ Description of Each State

Disable state

In this state, the transfer of the channel to be controlled is prohibited. Channels in this state do nothing and wait for instruction from CPU. At the system reset, DE=0, EB=0, DH=0000 and PB=0 apply to this Disable state.

Transfer state

In this state, the transfer of the channel to be controlled is enabled. Channels in this state perform transfer operation as specified. Once all of the transfer operations are completed, they return to the Disable state. The state is also changed as instructed by CPU.

Pause state

In this state, the channel to be controlled has its transfer operation on pause due to an instruction to pause, issued by CPU, and is waiting for another instruction from CPU.

■ Explanation of Control Procedure

1. **Disable state / Preparation for transfer**

   Specify via CPU the transfer content for the channel to be controlled (writing to DMACSA, DMACDA, DMACA and DMACB). For details of transfer content to be specified, see the section describing register functions. When generating an interrupt from DMAC upon the completion of transfer, set EI and CI.

   The following restrictions apply to software transfer. Specify ST=1 and IS[5:0]=000000. Demand transfer mode cannot be specified to MS. Always set "0" to EM.

   Give an instruction to enable all-channel operation and set PR. Data can also be written to DMACA at the same time in Step 2.

2. **Disable state => Transfer state / Start of transfer**

   Give an instruction to enable individual-channel operation from CPU. When DE=1, EB=1, DH=0000 and PB=0 are set, the channel to be controlled moves to Transfer state.

3. **Transfer state**

   When the channel in Transfer state becomes enabled to access the system bus, it performs a transfer according to the transfer content (it may take time to start the transfer, depending on the status of other channels). In the case of Block transfer, a Transfer Gap is generated every time TC is updated. In the case of Burst transfer, no Transfer Gap is generated. During the transfer operation, BC, TC, DMACSA and DMACDA indicate the remaining number of transfers and the transfer address at that time point. The transfer status can be checked by reading from CPU.

   The specified transfer content cannot be changed via CPU to the channel in Transfer state (rewriting to DMACSA, DMACDA, DMACA[29:0], DMACB[31:1]). (However, EB, PB and EM can be rewritten.)

4. **Transfer state => Disable state / Successful completion of transfer**

   When transfers are successfully completed for the number of times calculated by (BC+1) × (TC+1), the channel in Transfer state clears EB, PB and ST and moves to Disable state. It sets SS=101 to provide the notification of the successful completion. See Example 1 in Figure 4-2. If successful transfer completion interrupt has been enabled by CI, an interrupt occurs. If reload has been specified to BC, TC, DMACSA and DMACDA, such reload is executed according to the specified transfer content.

Figure 4-2 Example of Operation of Software-Block Transfer

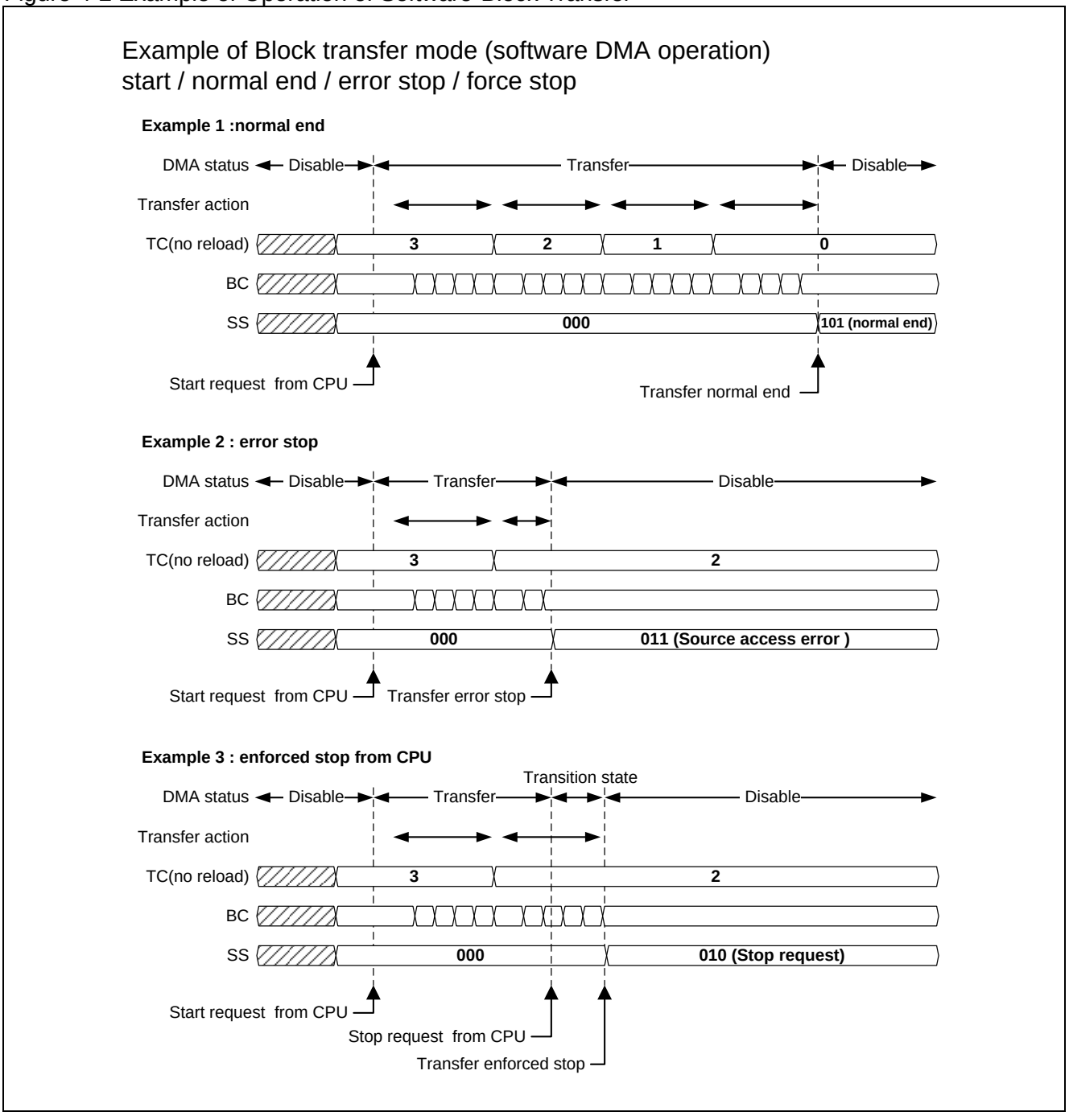

5. **Transfer state => Disable state / Transfer error stop**

   The channel in Transfer state suspends the transfer process, if an address overflow, transfer source access error or transfer destination access error occurs. It clears EB, PB and ST and moves to Disable state. It sets the value that indicates the error content to SS[2:0] to give the notification of the error stop. See Example 2 in Figure 4-2. If unsuccessful transfer completion interrupt has been enabled by EI, an interrupt occurs. BC, TC, DMACSA and DMACDA to which reload has not been specified hold the values set at the time of the transfer suspension.

   Normally, a transfer error occurs, when an attempt is made to access an address area that does not exist in the system bus or an address area that prohibits access from DMAC. No such error occurs in general applications.

6. **Transfer state, Pause state => Disable state / Forced transfer stop**

   If an instruction to disable individual-channel operation or an instruction to disable all-channel operation is issued from CPU to a channel in Transfer state or Pause state, the transfer operation of that channel can be forced to stop (for the operation when an instruction to disable operation is issued to a channel in Disable state, see Step 11 in the software procedure).

   If an instruction is given from CPU, the relevant channel suspends its transfer process. It clears EB, PB and ST and moves to Disable state. It sets SS[2:0]=010 and gives the notification that the transfer of that channel has been forced to stop. If unsuccessful transfer completion interrupt has been enabled by EI, an interrupt occurs. BC, TC, DMACSA and DMACDA to which reload has not been specified hold the values set at the time of the transfer suspension.

   After instructed from CPU, the transfer stops at the timing when the relevant channel is not performing transfer (in Transfer Gap before the transfer starts), as shown in the Example 3 in Figure 4-2. In the case of a channel in Pause state, the transfer stops immediately. There is a time difference (Transition state) between the instruction and the stop. It may take some time, depending on the BC setting. As a new transfer cannot be set or started during this period, always make sure that the operation has stopped before setting the next transfer.

   In the case of an instruction to disable all-channel operation, the timing to stop varies depending on the channel. As DS is set when all of the channels are stopped, it can confirm that all of the channels have stopped.

   Even if instructed from CPU, the transfer may not be forced to stop, and instead, it may be successfully completed due to factors such as transfer mode (Burst/Block/Demand) and transfer status (the number of transfers performed, the timing of instruction to disable the operation). Also, if a transfer error occurs before the transfer stops, error stop applies to the transfer.

7. **Disable state / Post-transfer process**

   SS is read from CPU to check the state of completion of the transfer. CPU clears SS to prepare for the next transfer. If interrupts have been enabled, the interrupt signal from DMAC is deasserted by clearing SS.

   In the case of successful completion, CPU resets the transfer content, as required. If each reload has been specified, the values set before the start of the transfer are reloaded to BC, TC, DMACSA and DMACDA. If each reload has not been specified, BC and TC are initialized to "0". DMACSA and DMACDA show the address for the next transfer.

   In the cases of error stop and forced stop, BC, TC, DMACSA and DMACDA must always be reset, because they may have the values set at the time of the suspension.

   If the transfer is stopped due to an instruction to disable all-channel operation, DE is set to "0"; therefore, the next transfer will require an instruction to enable all-channel operation and an instruction to enable individual-channel operation.

8. **Transfer state / Transfer pause**

   If an instruction to put individual-channel operation on pause or an instruction to put all-channel operation on pause is issued from CPU to a channel in Transfer state, the transfer operation of the relevant channel(s) can be put on pause (for the operation when an instruction to put the operation on pause is issued to a channel in Disable state, see Step 11 in the software procedure).

If an instruction is given from CPU, the relevant channel(s) temporarily suspends the transfer process. It sets SS=111 and gives the notification that it is in Pause state. In this case, no interrupt can be generated.

After instructed from CPU, the transfer stops at the timing when the relevant channel is not performing transfer (in Transfer Gap before the start of the transfer). There is a time difference (Transition state) between the instruction and the stop. It may take some time, depending on the BC setting. See Figure 4-3.

In the case of an instruction to put all-channel operation on pause, the timing to stop varies depending on the channel. As DS is set when all of the channels are stopped, it can confirm that all of the channels have stopped. See Figure 4-3.
Even if instructed from CPU, the transfer may not be put on pause, and instead, it may be successfully completed due to factors such as transfer mode (Burst/Block/Demand) and transfer status (the number of transfers performed, the timing of instruction to put the operation on pause). Also, if a transfer error occurs before the transfer stops, error stop applies to the transfer.

Figure 4-3 Operation when All-channel Pause is Instructed

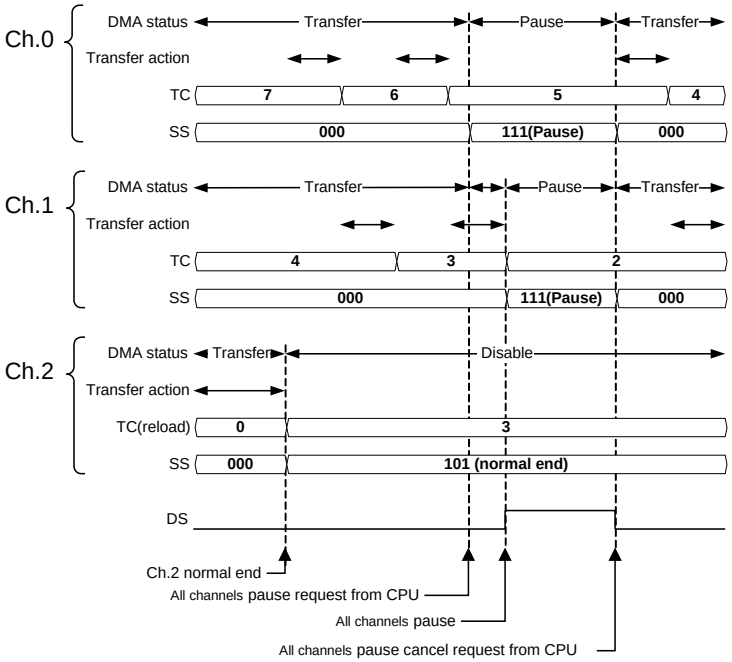

9. Pause state

SS is read from CPU to confirm the pause of the transfer. The SS of a channel in Pause state is "111". While in this state, it cannot be cleared from CPU.

Even during the pause, the transfer content cannot be specified or changed (writing DMACSA, DMACDA, DMACA[29:0] or DMACB[31:1]). Also, when a channel in Pause state is instructed to pause, it continues to remain in the Pause state.

10. Pause state / Cancellation of transfer pause

If an instruction to enable individual-channel operation is issued to a channel that has been in Pause state due to an instruction to put individual-channel operation on pause, that channel returns to Transfer state. If an instruction to enable all-channel operation is issued to channels that have been in Pause state due to an instruction to put all-channel operation on pause, those channels return to Transfer state. If both of the pause instructions have been given, issue an instruction to cancel both of them.

After the instruction, SS[2:0] is cleared to "000" via DMAC.

If an instruction to enable individual-channel operation and an instruction to enable all-channel operation are issued in Pause state, they instruct the pause to be cancelled. If they are issued in Disable state, attention must be paid, as they may instruct a new transfer to be started. See Step 11 in the software procedure.

Figure 4-3 shows an example of the case where an instruction to put all-channel operation on pause. The explanation of the figure is as follows.

At the beginning, three channels, namely ch.0, ch.1 and ch.2, perform their transfer operations in Block transfer mode. ch.2 successfully completes its transfer, moves to Disable state and sets SS=101. Then, ch.0 and ch.1 perform transfers alternately.

If an instruction to put all-channel operation on pause is issued from CPU at this point, the following operation applies. As ch.0 is subject to the Transfer Gap timing, it immediately moves to Pause state and sets SS=111. As ch.1 is in the middle of transfer operation, it performs the transfer until the timing of the next Transfer Gap, and then moves to Pause state and sets SS=111. As ch.2 is in Disable state, it remains in the Disable state without changing SS. DS is set, when all of the channels stop their operations.

Next, if an instruction to enable all-channel operation (instruction to cancel the pause) is issued from CPU, the following operation applies. ch.0 and ch.1 return to Transfer state and clear SS[2:0] to "000". As ch.2 is in Disable state (DE=1, EB=0), it remains in that state without starting the operation. Because the pause of all of the channels has been cancelled now, DS is reset.

11. Operation in Disable state

A channel in Disable state remains in the Disable state, unless the conditions such as DE=1, DH=0000, EB=1, and PB=0 are established. Although in 1-2 of the software procedure, DE is set from the conditions of DE=0 and EB=0, and then, EB is set, there is no problem to set EB before DE. DE can be set last after all of the transfer settings of multiple channels subject to transfer are completed. In this case, an instruction can be issued to allow the multiple channels subject to transfer to start their transfer operations simultaneously. If such instruction for simultaneous start of transfers is issued, DMAC selects the channels to which transfers are to be started, according to the PR setting (PR can be set or changed, only when all-channel operation is disabled).

If an instruction to disable individual-channel operation, an instruction to put individual-channel operation on pause, an instruction to disable all-channel operation or an instruction to put all-channel operation on pause is issued to a channel in Disable state, only the settings of DE, DH, EB and PB are changed, but the conditions of DE=1, DH=0000, EB=1 and PB=0 are not established. Therefore, the relevant channels do nothing and do not change SS. If an instruction to put all-channel operation on pause is issued from CPU to a channel in Disable state, as shown in the example of ch.2 operation in Figure 4-3, that channel does not change its state with SS[2:0] indicating the completion of the previous transfer.

If an instruction to put individual- or all-channel operation on pause is issued to a channel in Disable state, it may be put in Disable state with DE=1, EB=1, (DH=0000 or PB=1). Although the bit values in this state are the same as DE, EB, DH and PB, they can be distinguished because SS[2:0] has a different value. Figure 4-4 shows such an example.

Figure 4-4 Example of Operation when Instruction to Put Individual-channel Operation on Pause is Issued in Disabled State

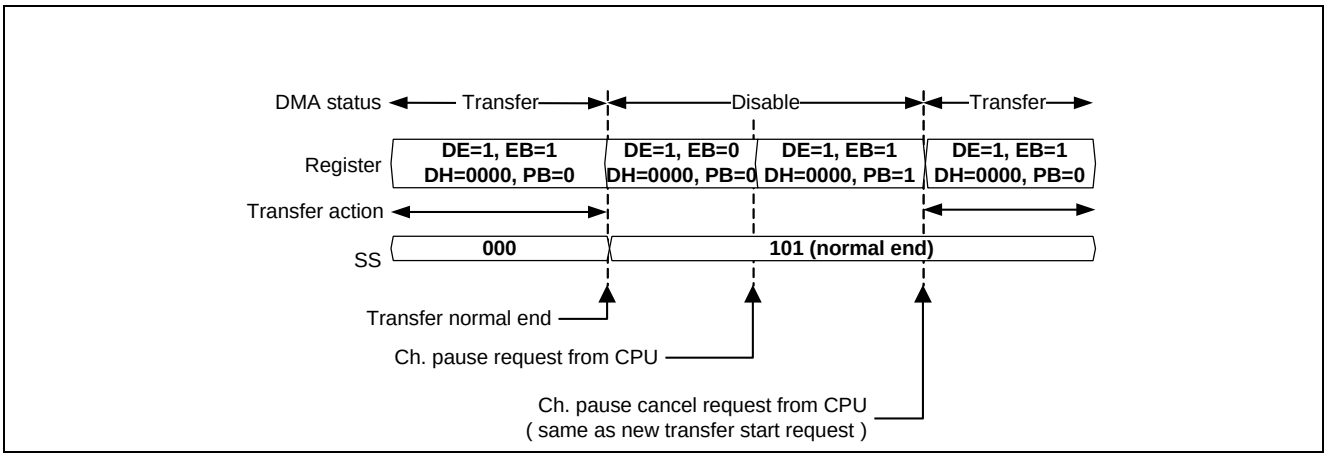

A certain channel is performing transfer operation. CPU issues an instruction to put individual-channel operation on pause to that channel. The instruction is issued after the transfer is completed and it moves to Disable state (DE=1, DH=0000, EB=0, PB=0). This phenomenon can occur, because the channel currently performing transfer operation changes its state outside CPU's intention. In this case, the bit values of the relevant channel change to (DE=1, DH=0000, EB=1, PB=1) due to instruction from CPU, but SS[2:0] remains "101", the value set upon the completion. If the operation is stopped by a pause instruction, SS[2:0] will be "111"; therefore, it will be possible to distinguish between the pause state and the state in which the transfer has been completed. It should be noted that if an instruction to cancel the pause is issued without checking the state of the channel by SS[2:0], a new transfer will accidentally start, as shown in Figure 4-4.

Additional Matter 1

As ST is cleared upon the completion of a transfer, the read value of ST is "0" after the completion of the transfer. In the case of software transfer, it should be noted that "1" must always be written to ST, regardless of its read value.

Additional Matter 2

An instruction to enable individual-channel operation cannot be issued during the period after the previous instruction to enable individual-channel operation instructs the start of transfer and before the completion of the transfer is confirmed. This is because the channel to be controlled may change its state outside CPU's intention and an instruction to start a new transfer may be issued when DMAC has moved to Disable state (EB=0). Even if the SS[2:0] value confirms that the channel to be controlled is in Transfer state, the channel to be controlled may move to Disable state during the period between that point and the write operation.

Additional Matter 3

The DE and DH values can only be rewritten from CPU and these registers are never cleared from DMAC. Therefore, there is no problem to write DE=1 and DH=0000 during the transfer operation.

DH is not cleared, if an instruction to disable individual-channel operation is issued to a channel in all-channel Pause state (DE=1, DH=0000, EB=1, PB=0). After the instruction, the relevant channel moves to Disable state (DE=1, DH=0000, EB=0, PB=0). To start a new transfer of the relevant channel, write DE=1 and DH=0000. This indicates that the cancellation of the pause of all-channel operation is required in order to start a new transfer of the individual channel.

Additional Matter 4

The SS[2:0] value is set from DMAC upon the completion of a transfer and it is never rewritten from DMAC as long as it is in Disable state. Even if the SS[2:0] value is not cleared, the next transfer can be started. However, if it moves to Transfer state, the SS[2:0] value may be cleared from DMAC (or may not be cleared). When an interrupt from DMAC is used, it should be noted that the interrupt signal is deasserted at a timing which is not intended by CPU, if it moves to Transfer state without clearing SS[2:0].

4.3. DMAC Operation and Control Procedure for Hardware (EM=0) Transfer

This section explains DMAC operation and control procedure for hardware (EM=0) transfer.

Figure 4-5 Transitional Diagram of Hardware (EM=0) Transfer State

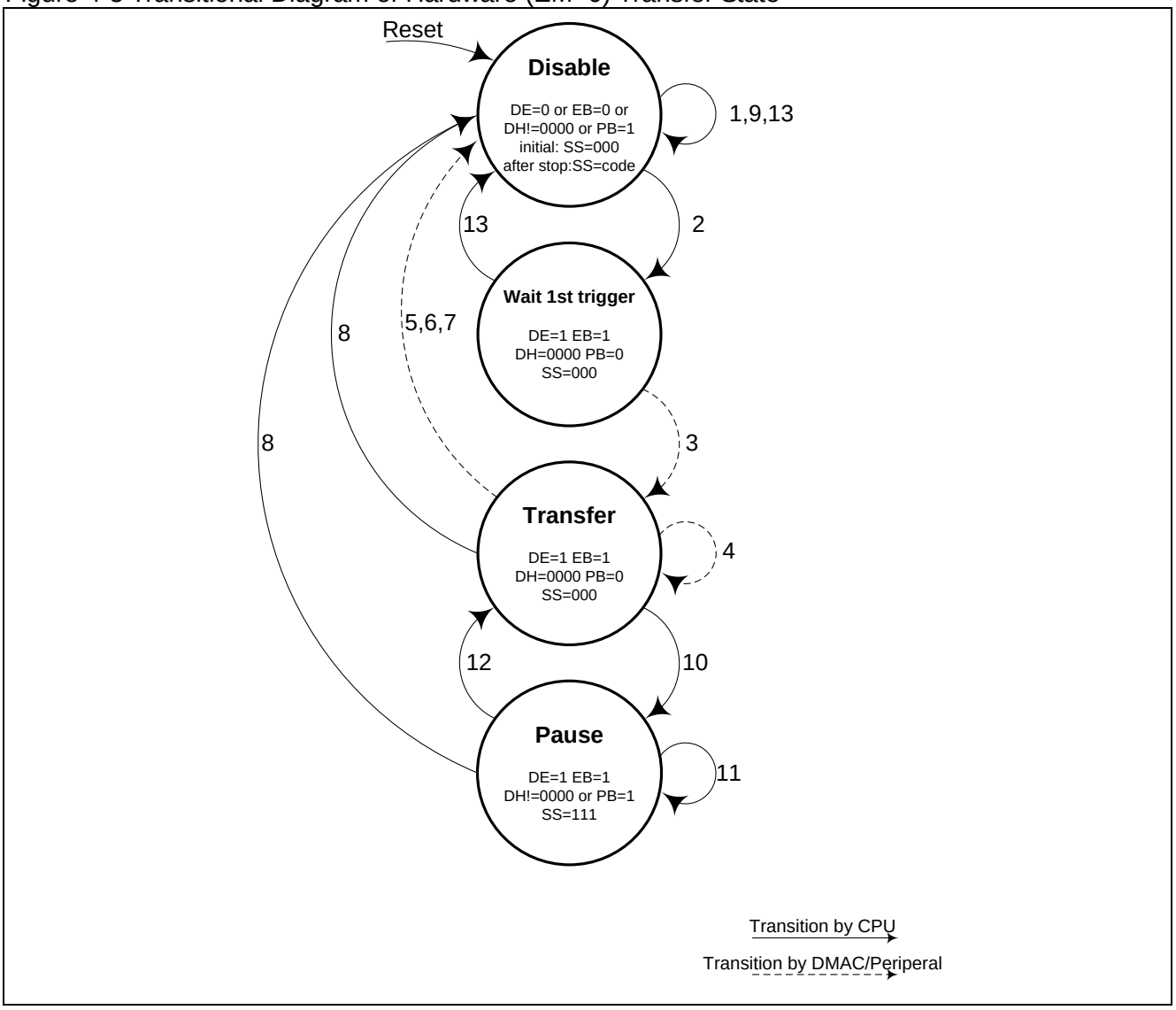

Figure 4-5 shows a transitional diagram of the states of the channel to be controlled for hardware (EM=0) transfer. The numbers next to the transitional lines in the figure correspond to the numbers which appear in the following control procedures. The solid transitional lines indicate transitions of state instructed by CPU, while the broken transitional lines indicate transitions of state due to DMAC/Peripheral operation.
Some parts of the explanation below state "See the software transfer procedure". This means that where the same control as in the software transfer procedure applies, no special mentioning is required; therefore, such redundant explanation has been omitted. In this example, the explanation assumes that EM=0 is set.

■ Description of Each State

Disable state

See Explanation of Control Procedure in "4.2 DMAC Operation and Control Procedure for Software Transfer".

Wait-1st-trigger state

In this state, the channel to be controlled is enabled to perform transfer. A channel in this state waits for the first transfer request from a Peripheral to be asserted. It also changes its state upon instruction from CPU.

Transfer state

In this state, the channel to be controlled has received the first transfer request from the Peripheral. A channel in this state performs transfer operation as specified. Once all the transfer operation is completed, it returns to Disable state. It also changes its state upon instruction from CPU.

Pause state

See Explanation of Control Procedure in "4.2 DMAC Operation and Control Procedure for Software Transfer".

■ Explanation of Control Procedure

1. Disable state / Preparation for transfer

See Step 1 in the software transfer procedure.

The following restrictions apply to hardware transfer. Decide in advance on which Peripheral's interrupt signal to be used as the transfer request signal to DMAC using the interrupt controller block (see the section on the functional explanation). Set ST=0 and specify which Peripheral's transfer request to be processed at the channel that will perform the transfer, by IS at the same time. Multiple channels cannot process transfer request of the same Peripheral. In the case of Demand transfer mode, set BC=0. This section explains the operation when EM=0 is set.

2. Disable state => Wait-1st-trigger state / Transfer enabled

An instruction to enable individual-channel operation is issued from CPU. When DE=1, EB=1, DH=0000 and PB=0 are set, the channel to be controlled moves to Wait-1st-trigger state.

3. Wait-1st-trigger state / Start of transfer

The channel in Wait-1st-trigger state is waiting for the transfer request signal to be asserted from the Peripheral or for an instruction from CPU. When the first transfer request signal is asserted, it moves to Transfer state.

4. Transfer state

See Step 3 in the software transfer procedure.

In the case of hardware transfer, a channel in Transfer state performs transfer operation by the transfer request signal from a Peripheral, as described in Sections 3.3 and 3.4. In each mode, match the number of transfer requests from the Peripheral with the number of transfer requests required by DMAC. Below is the explanation for the operation when the number of transfer requests goes over or below the requirement in each operation mode.

Figure 4-6 shows a case of Demand transfer. In the case of Demand transfer, the number of transfer requests required to complete the transfer is TC+1. Unless the number of transfer requests goes over or below the requirement, CPU does not have to intervene (Example 1 in Figure 4-6).

If the number of transfer requests generated from the Peripheral exceeds the DMAC's setting for the number of transfers, DMAC moves to Disable state after the completion of the specified number of transfers. In the Disable state, no further transfers are executed. Also, as the excessive transfer request signals are not cleared from DMAC, the asserted state continues (Example 2 in Figure 4-6).

If the number of transfer requests generated from the Peripheral is smaller than DMAC's setting for the number of transfers, DMAC waits for the remaining number of transfer requests in Transfer state (Example 3 in Figure 4-6).

It is supposed that DMAC's transfer processing may be too slow to catch up with the generation interval of transfer requests from Peripheral. In the case of Demand transfer, the transfer request signal remains asserted; therefore, as many as TC+1 of transfers can be performed (Example 4 in Figure 4-6).

Figure 4-6 Operation of Hardware-Demand Transfer

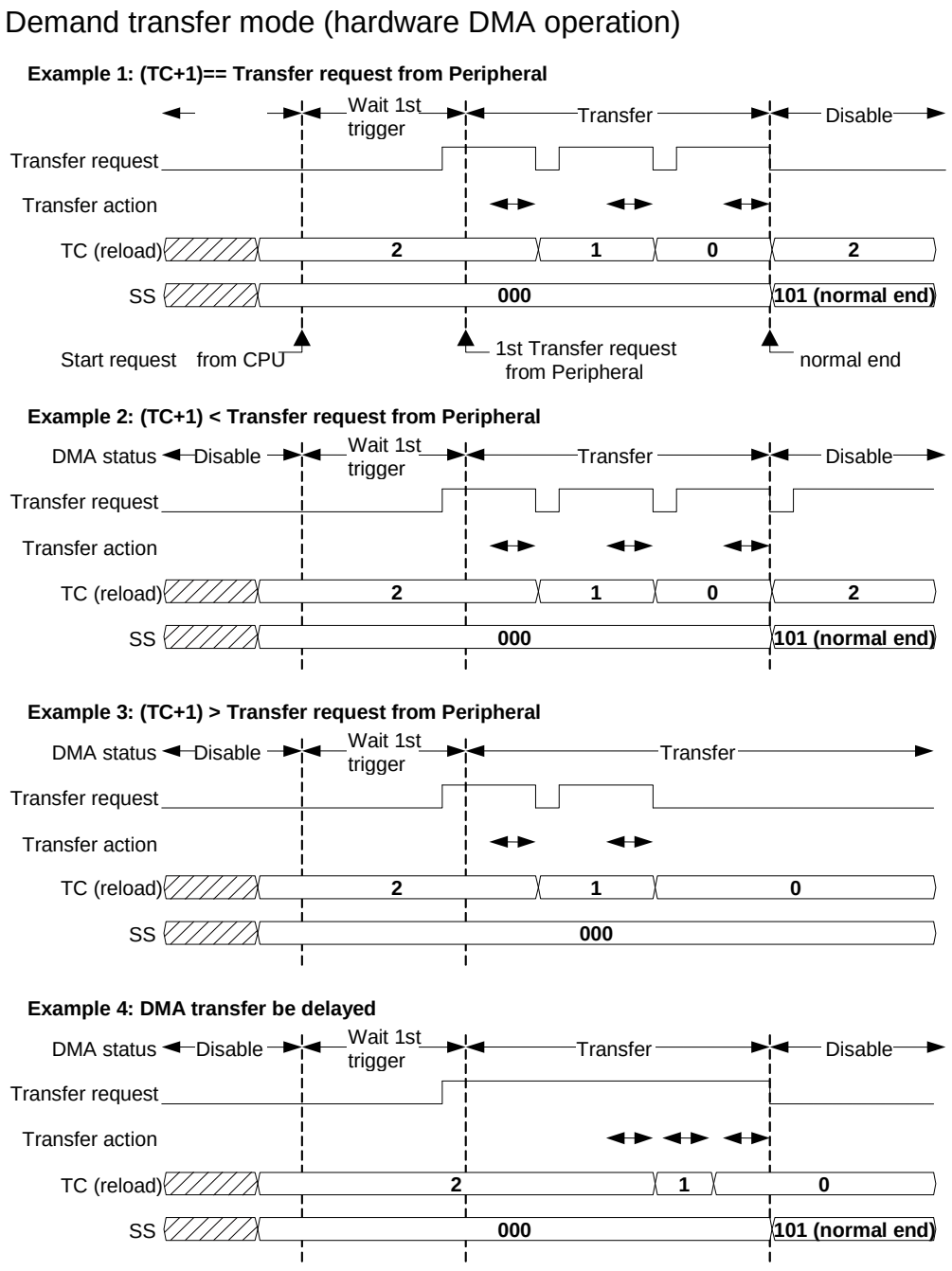

Figure 4-7 shows a case of Block transfer. In the case of Block transfer, the number of transfer requests required to complete the transfer is TC+1. Unless the number of transfer requests goes over or below the requirement, CPU does not have to intervene (Example 1 in Figure 4-7).

Figure 4-7 Operation of Hardware-Block Transfer

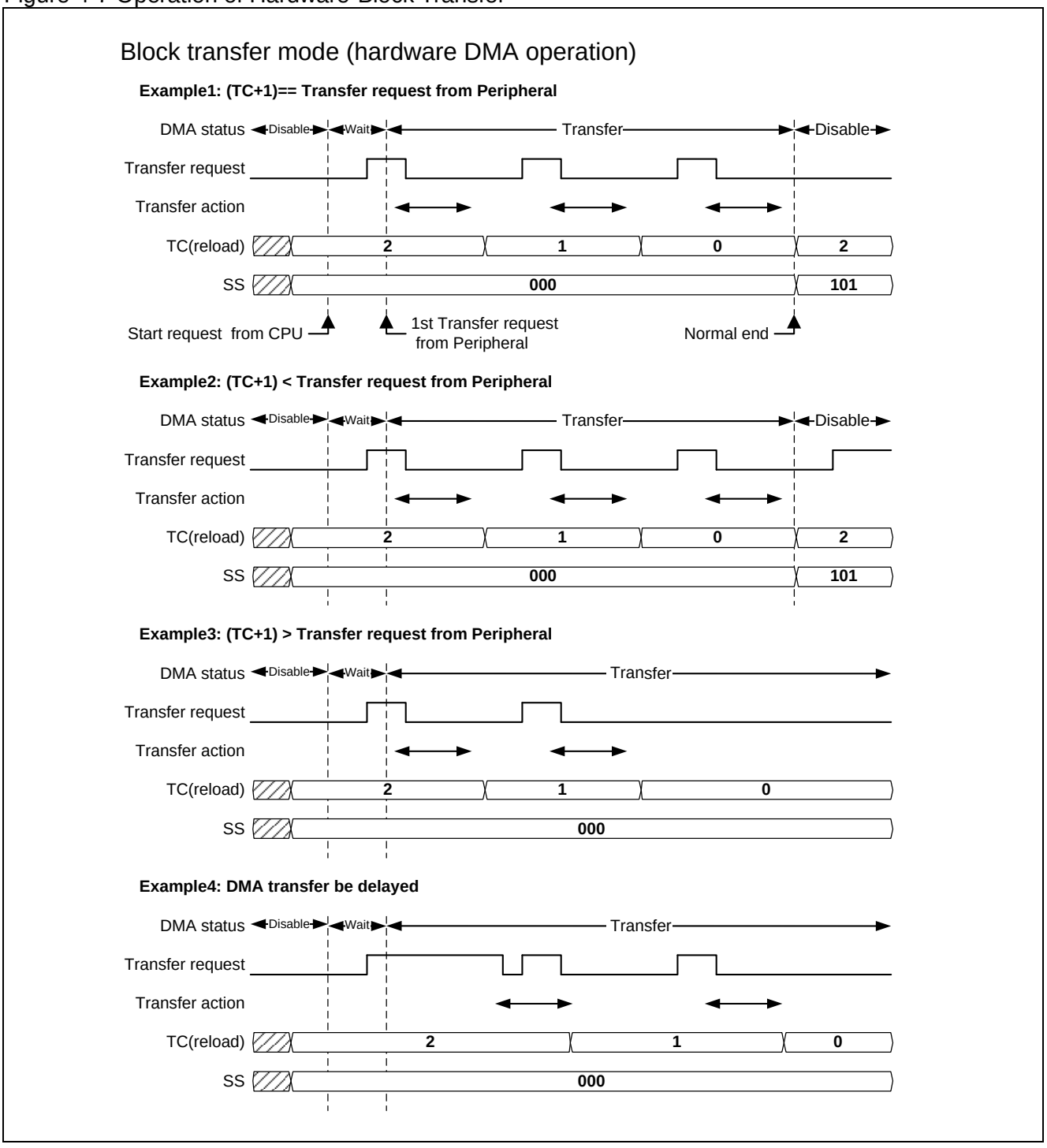

If the number of transfer requests generated from the Peripheral exceeds the DMAC's setting for the number of transfers, DMAC moves to Disable state after the completion of the specified number of transfers. In the Disable state, no further transfers are executed. Also, as the excessive transfer request signals are not cleared from DMAC, the asserted state continues, In this case, deassert the transfer request signal from CPU (Example 2 in Figure 4-7).
If the number of transfer requests generated from the Peripheral is smaller than DMAC's setting for the number of transfers, DMAC waits for the remaining number of transfer requests in Transfer state (Example 3 in Figure 4-7).
It is supposed that DMAC's transfer processing may be too slow to catch up with the generation interval of transfer requests from Peripheral. In the case of Block transfer, if DMAC's transfer processing is delayed from the transfer request from the Peripheral, the rising edge of the next transfer request signal during the transfer operation is ignored. Also, the transfer request signal asserted during the transfer operation is cleared from DMAC. Then, DMAC waits for the remaining transfer requests in Transfer state (Example 4 in Figure 4-7).
In the case of Burst transfer, all of the (BC+1) × (TC+1) of transfers are performed when it becomes accessible to the system bus after the first transfer request is received. The required number of transfer requests from the Peripheral is only the first one. If the number of transfer request signals generated exceeds the requirement, it is ignored in Disable state, just like Block transfer.

5. **Transfer state => Disable state / Successful completion of transfer**
   See Step 4 in the software transfer procedure.

6. **Transfer state => Disable state / Transfer error stop**
   See Step 5 in the software transfer procedure.

7. **Transfer state => Disable state / End of Peripheral stop request**
   The channel in Transfer state suspends its transfer processing, if the transfer stop request signal is asserted from the Peripheral. It clears EB, PB and ST and moves to Disable state. It sets "010" to SS[2:0] and gives the notification of the error stop. If interrupts have been enabled by EI, an unsuccessful transfer completion interrupt occurs. BC, TC, DMACSA and DMACDA to which reload has not been specified hold the values set during the suspension of the transfer. Attention must be paid to the SS[2:0] value, which is the same as the stop request from software.

8. **Transfer state, Pause state => Disable state / Forced termination of transfer**
   See Step 6 in the software transfer procedure.

9. **Disable state / Post-transfer processing**
   See Step 7 in the software transfer procedure.
   Normally, in the cases of stop request from Peripherals, forced termination from software and transfer error stop, the transfer request signal remains asserted, because the number of transfers processed is smaller than the number of transfer requests from the Peripheral. Instruct from CPU the Peripheral to deassert the transfer request signal. In the case of stop request from Peripherals, the transfer request signal is masked as long as the stop request signal is asserted. Also deassert the transfer stop request signal.
   Even if DMAC has successfully completed the specified number of transfers, the transfer request signal may remain asserted or may be reasserted, depending on Peripheral's settings. Attention must be paid to the possibility that this may affect the next transfer.

10. **Transfer state, Pause state / Transfer pause**
    See Step 8 in the software transfer procedure.

11. **Pause state**
    See Step 9 in the software transfer procedure.
    The channel in Pause state does not execute transfer, even if the transfer request signal from the Peripheral is asserted. It does not clear the transfer request signal either.

12. **Pause state / Cancellation of transfer pause**
    See Step 10 in the software transfer procedure.
    When an instruction to cancel the pause is issued while it is in Pause state, it returns to Transfer state. If the transfer request signal was asserted in the previous Pause state, the operation to follow varies as shown below,

depending on the transfer mode.
In the case of Demand transfer mode, the transfer request signal remains asserted from the Pause state. Therefore, the transfer is resumed when DMAC returns to Transfer state, and the transfer request signal is cleared as normal. See Figure 4-8.

Figure 4-8 Operation of Demand Transfer in Pause State

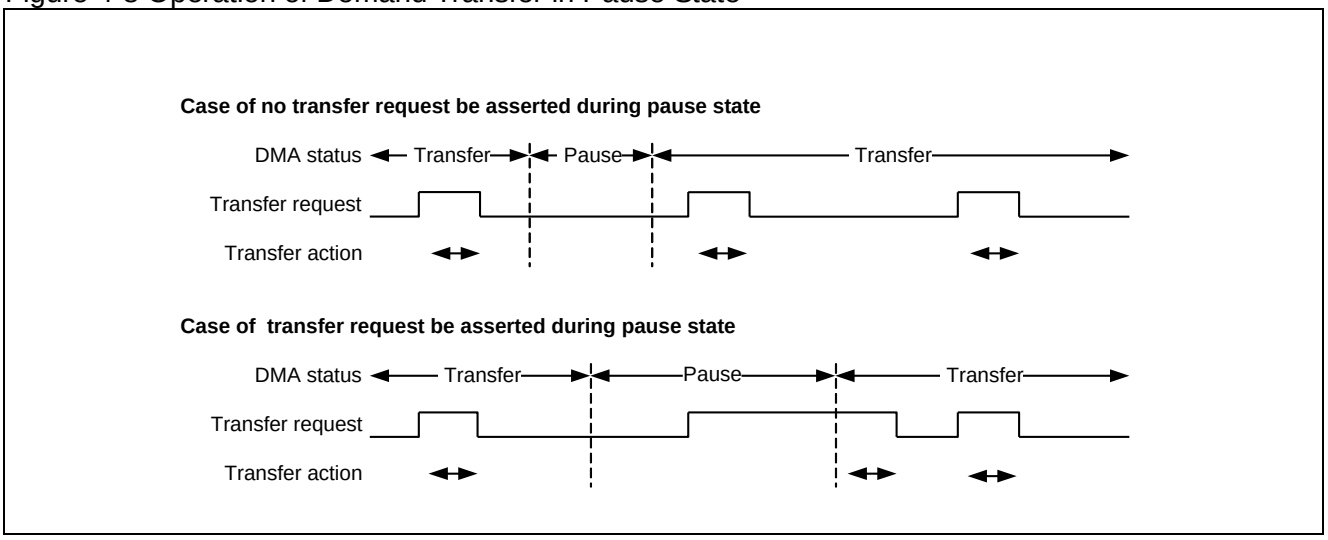

In the case of Block transfer mode, the transfer request signal remains asserted. Even when it returns to Transfer state, the rising edge of the transfer request signal is not detected, and the transfer is not resumed. Therefore, the transfer request is ignored during Pause state. Also, the transfer request signal is not cleared from DMAC. To resume the transfer which has been put on pause, instruct from CPU the Peripheral to deassert the transfer request signal after an instruction to cancel the pause is issued to DMAC. After that, the transfer will be resumed when the next transfer request is generated from the Peripheral. In this case, attention must be paid to the difference between the number of transfer requests output from the Peripheral and the number of transfer requests received by DMAC. See Figure 4-9.

Figure 4-9 Operation of Block Transfer in Pause State

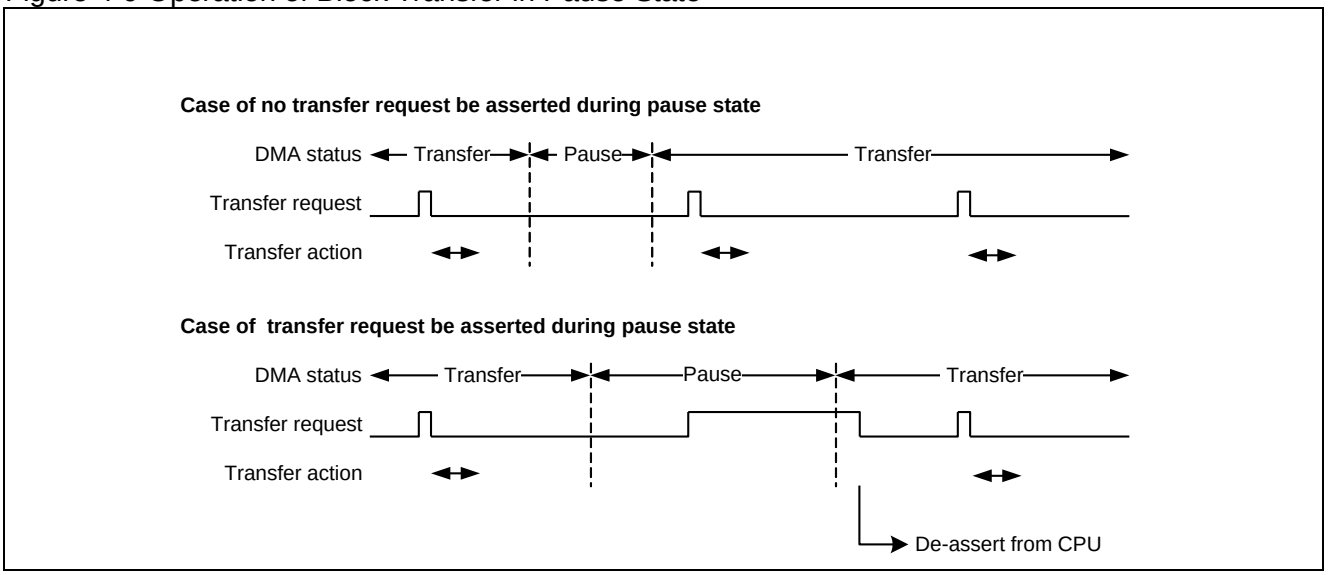

13. Operation in Disable state and Wait-1st-trigger state

See Step 11 in the software transfer procedure.

If the transfer request signal is not asserted to the channel in Disable state, the specifications of the transfer content can be changed freely (rewriting to registers DMACSA, DMACDA, DMACA[29:0], and DMACB).

If the transfer request signal is asserted or may be asserted to the channel in Disable state, the specifications of IS, ST and MS in the transfer content cannot be changed. If an attempt is made to change these settings, DMAC may perform unexpected behaviors. To change the settings of IS, ST and MS, first clear the transfer request signal to both of the Peripherals (used before and after the change) from CPU, and then always change the settings while the transfer request signal is deasserted. See Figure 4-10.

Figure 4-10 Changing IS, ST and MS Settings

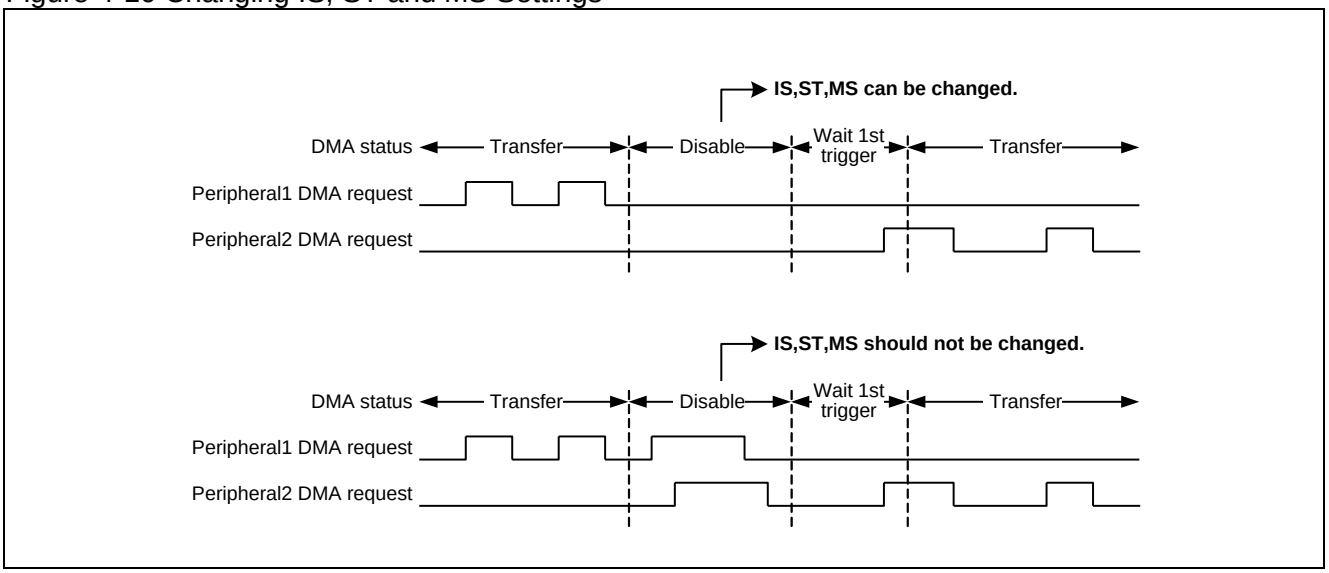

The specifications of the transfer content cannot be changed to the channel in Wait-1st-trigger state from CPU

If the transfer request signal is not asserted to the channel in Wait-1st-trigger state, it moves to Disable state when CPU issues an instruction to disable individual- or all-channel operation or an instruction to put individual- or all-channel operation on pause. In this case, it is considered that the enabled transfer has been cancelled. In any case, SS does not change.

If the transfer request signal may possibly be asserted to the channel in Wait-1st-trigger state, it should be noted that DMAC has already started or completed the transfer before the attempted cancellation of the enabled transfer from CPU.

In Disable state, DMAC does not start the transfer or clear the transfer request, even if the transfer request signal is asserted. If it moves to Wait-1st-trigger state by instruction from CPU while the transfer request signal is asserted, the following operation applies (only when the settings of IS, ST and MS are not intended to be changed, as explained earlier).

In the case of Demand transfer mode, DMAC immediately moves to Transfer state and starts the transfer, because the transfer request signal remains asserted. The transfer request signal is cleared from DMAC as normal. See Figure 4-11.

Figure 4-11 Operation of Demand Transfer in Disable State

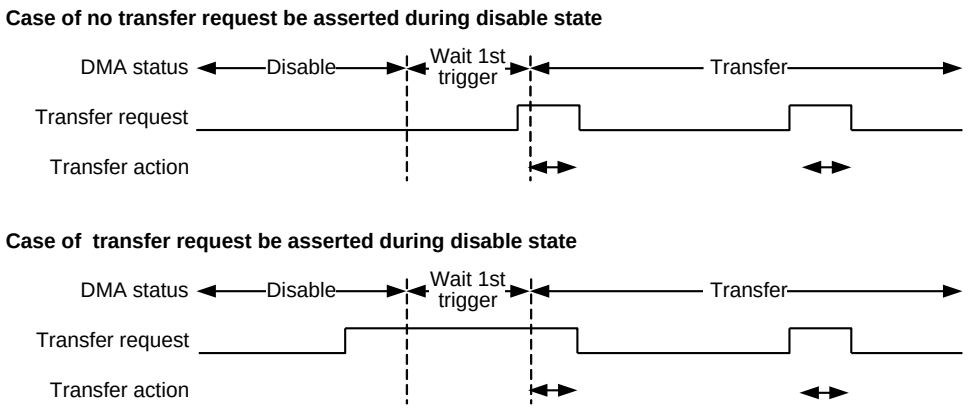

In the case of Block transfer mode, the transfer request signal remains asserted. Even when it moves to Wait-1st-trigger state, the rising edge of the transfer request signal is not detected, and the transfer is not resumed. Therefore, the transfer request is ignored during Disable state. Also, the transfer request signal is not cleared from DMAC. To resume the transfer, instruct DMAC to move to Wait-1st-trigger state, and then instruct from CPU the Peripheral to deassert the transfer request signal. After that, it will move to Transfer state and the transfer will be resumed when the next transfer request is generated from the Peripheral. In this case, attention must be paid to the difference between the number of transfer requests output from the Peripheral and the number of transfer requests received by DMAC. See Figure 4-12.

Figure 4-12 Operation of Block Transfer in Disable State

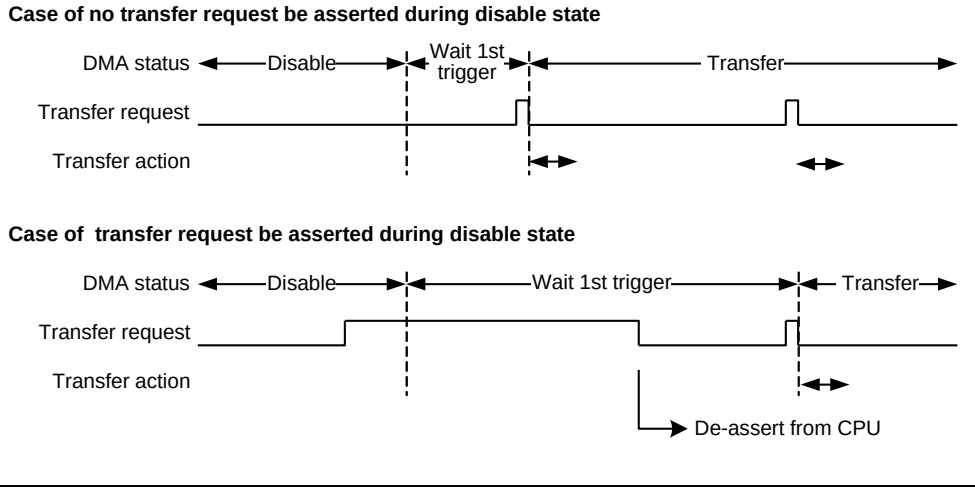

Additional Matter 1

See Additional Matter 1 in “ 4.2. DMAC Operation and Control Procedure for Software Transfer”.
In the case of hardware transfer, always write "0" to ST.

Additional Matter 2

See Additional Matter 2 in “ 4.2. DMAC Operation and Control Procedure for Software Transfer”.

Additional Matter 3

See Additional Matter 3 in “4.2. DMAC Operation and Control Procedure for Software Transfer”.

Additional Matter 4

See Additional Matter 4 in “4.2.DMAC Operation and Control Procedure for Software Transfer”.

Additional Matter 5

If the transfer request signal (interrupt signal) from the Peripheral needs to be deasserted, the following method is available. Normally, the interrupt signal from the Peripheral is the interrupt factor flag masked (logic AND) by the interrupt enable flag. The interrupt signal can be deasserted by resetting either of the flags. When the interrupt enable flag is reset and then set, the rising edge occurs to the interrupt signal. Following this procedure can notify DMAC of the transfer request for Block transfer again. For details, check the manual for each Peripheral.

4.4. DMAC Operation and Control Procedure for Hardware (EM=1) Transfer

This section explains DMAC operation and control procedure for hardware (EM=1) transfer.

Figure 4-13 Transitional Diagram of Hardware (EM=1) Transfer State

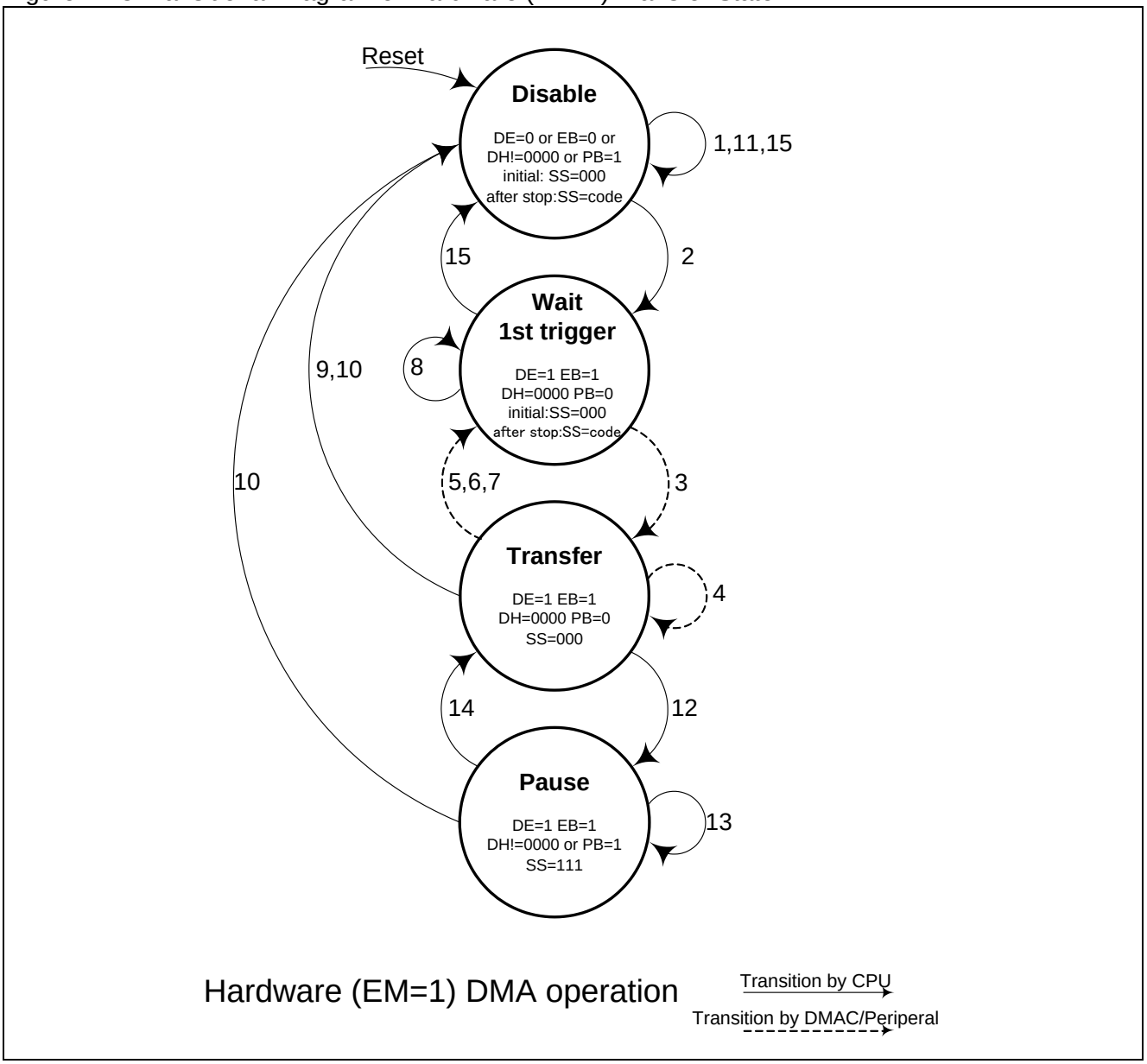

Figure 4-13 shows a transitional diagram of the states of the channel to be controlled for hardware (EM=1) transfer. The numbers next to the transitional lines in Figure 4-13 correspond to the numbers which appear in the following control procedures. The solid transitional lines indicate transitions of state instructed by CPU, while the broken transitional lines indicate transitions of state due to DMAC/Peripheral operation.
EM (Enable bit clear mask) is a bit that masks EB clear upon the completion of transfer of the channel to be controlled. EM=1 enables the same transfer process to be repeated without giving instructions from CPU.

■ Description of Each State

Disable state

See the hardware transfer (EM=0) procedure.

Wait-1st-trigger state

See the hardware transfer (EM=0) procedure.

Transfer state

In this state, the channel to be controlled has received the first transfer request from the Peripheral. A channel in this state performs transfer operation as specified. In the case of EM=1, it moves to Wait-1st-trigger state, once all the transfer operation is completed. It also changes its state upon instruction from CPU.

Pause state

See the hardware transfer (EM=0) procedure.

■ Explanation of Control Procedure

1. **Disable state / Preparation for transfer**
   See Step 1 in the hardware transfer (EM=0) procedure.

   To set EM=1, set all of the reload specifications for the transfer content (RC, RS, RD) in order to prevent data transfer in an unintended address area. Also, CI is not set, because it is meaningless to generate a successful transfer completion interrupt from DMAC. EI is set to generate an unsuccessful transfer completion interrupt from DMAC.

2. **Disable state => Wait-1st-trigger state / Enabling transfer**
   See Step 2 in the hardware transfer (EM=0) procedure.

3. **Wait-1st-trigger state / Start of transfer**
   See Step 3 in the hardware transfer (EM=0) procedure.

4. **Transfer state**
   See Step 4 in the hardware transfer (EM=0) procedure.

5. **Transfer state => Wait-1st-trigger state / Successful completion of transfer**
   When transfers are successfully completed for the number of times calculated by (BC+1) × (TC+1), the channel in Transfer state does not clear EB but does clear PB and ST and moves to Wait-1st-trigger. It sets SS=101 to provide the notification of the successful completion. As CI is not set, no successful transfer completion interrupt is generated. Since RC, RS and RD are set, the specifications of the transfer content of BC, TC, DMACSA and DMACDA are reloaded.

6. **Transfer state => Wait-1st-trigger state / Transfer error end**
   See Step 6 in the hardware transfer (EM=0) procedure.

   In the case of EM=1, EB is not cleared even if the transfer ends due to an error. It clears PB and ST, moves to Wait-1st-trigger state and waits for the next transfer request. Therefore, it is recommended not to use DMA transfer with EM=1 in an address area where a transfer error may occur.

7. **Transfer state =>Wait-1st-trigger state /End of Peripheral stop request**
   See Step 7 in the hardware transfer (EM=0) procedure.

   In the case of EM=1, EB is not cleared even if a stop request is issued from the Peripheral. It clears PB and ST and moves to Wait-1st-trigger state. Since RC, RS and RD are set, the specifications of the transfer content of BC, TC, DMACSA and DMACDA are reloaded. As EI is set, an unsuccessful transfer completion interrupt is generated.

8. **Wait-1st-trigger state / Post-transfer process**
   In the case of EM=1, EB is not cleared upon the completion of the transfer. (DE=1, EB=1, DH=0000, PB=0) is set and it moves to Wait-1st-trigger state. When the next transfer request is generated from the Peripheral, therefore, the next transfer starts without an instruction from CPU.

   If it moves to Wait-1st-trigger state due to a stop request from the Peripheral, an unsuccessful completion interrupt occurs and that state can be confirmed. Also, the transfer request signal is masked while the stop request signal is asserted. Even if the next transfer request signal is asserted from the Peripheral, it will not be recognized and the channel to be controlled will remain in Wait-1st-trigger state, waiting for an instruction from CPU.

   In the above case, SS is read from CPU to check the state of the transfer completion. The interrupt signal is deasserted by clearing SS from CPU. CPU clears EB and it returns to Disable state (this operation is the operation shown in Step 15 of the hardware transfer (EM=1) procedure). The transfer request signal and the stop request signal from the Peripheral are deasserted, as shown in Step 7 of the hardware transfer (EM=0) procedure

9. **Transfer state => Disable state / Completion of transfer by EM=0**
   The operation can exit from the loop of Wait-1st-trigger state and Transfer state by writing EM=0 from CPU. At the timing when the transfer stops after the instruction, EB, ST and PB are cleared and the Transfer state changes to Disable state (DE=1, EB=0, DH=0000, PB=0) to successfully complete the transfer. In this case, no successful transfer completion interrupt is generated, as CI is not set.

10. **Transfer state, Pause state => Disable state / Forced termination of transfer**
    See Step 8 in the hardware transfer (EM=0) procedure.

    The operation can exit from the loop of Wait-1st-trigger state and Transfer state by an operation disable instruction. When an instruction to disable individual-channel operation is issued, the relevant channel moves to Disable state (DE=1, EB=0, DH=0000, PB=0) and stops the operation. When an instruction to enable all-channel operation is issued, it moves to Disable state (DE=0, EB=1, DH=0000, PB=0) and stops the operation. In the case of an instruction to disable all-channel operation, EB is not cleared either; therefore, attention must be paid.

    When the operation exits from Transfer state, an unsuccessful transfer completion interrupt occurs because it is unsuccessful completion due to the forced stop. When it exits from Wait-1st-trigger state, the enabled transfer is cancelled (this operation is the operation shown in Step 15 of the hardware transfer (EM=1) procedure).

11. **Disable state / Post-transfer processing**
    See Step 9 in the hardware transfer (EM=0) procedure.

12. **Transfer state, Pause state / Transfer pause**
    See Step 10 in the hardware transfer (EM=0) procedure.

13. **Pause state**
    See Step 11 in the hardware transfer (EM=0) procedure.

14. **Pause state / Cancellation of transfer pause**
    See Step 12 in the hardware transfer (EM=0) procedure.

15. **Operation in Disable state and Wait-1st-trigger state**
    See Step 13 in the hardware transfer (EM=0) procedure.

    In the case of EM=1, the Transfer state changes directly to Wait-1st-trigger state. Therefore, the specifications of the transfer content cannot be rewritten during the repeated transfer operation (rewriting the registers DMACSA, DMACDA, DMACB[31:1] and DMACA[28:0]).

Additional Matter 1

See Additional Matter 1 in “4.3. DMAC Operation and Control Procedure for Hardware (EM=0) Transfer”.

Additional Matter 2

See Additional Matter 2 in “4.3. DMAC Operation and Control Procedure for Hardware (EM=0) Transfer.
In the case of EM=1, Additional Matter 2 does not apply, because EB is not cleared during the transfer operation”.

Additional Matter 3

See Additional Matter 3 in “4.3. DMAC Operation and Control Procedure for Hardware (EM=0) Transfer”.

Additional Matter 4

See Additional Matter 4 in “4.3. DMAC Operation and Control Procedure for Hardware (EM=0) Transfer”.

The following explains what must be noted when setting interrupts from DMAC with EM=1. As the target channel does not change from Wait-1st-trigger state due to an unsuccessful completion interrupt by a stop request from the Peripheral, the interrupt signal is not deasserted until it is cleared from CPU. Similarly, as the target channel moves to Disable state due to an unsuccessful transfer completion interrupt by a stop request from software, the interrupt signal is not deasserted until it is cleared from CPU. Other successful transfer completion interrupts and unsuccessful transfer completion interrupts may be deasserted at a timing that is not intended by CPU, if the relevant channel moves to Transfer state. Therefore, attention must be paid.

Additional Matter 5

See Additional Matter 5 in “4.3. DMAC Operation and Control Procedure for Hardware (EM=0) Transfer”.

5. Registers of DMAC

This section explains each register function of DMAC.

5.1 List of Registers

5.2 Entire DMAC Configuration Register (DMACR)

5.3 Configuration A Register (DMACA)

5.4 Configuration B Register (DMACB)

5.5 Transfer Source Address Register (DMACSA)

5.6 Transfer Destination Address Register (DMACDA)

5.1. List of Registers

Table 5-1 shows a list of DMAC control registers.

Table 5-1 List of DMAC Control Registers

Abbreviation	Ch. Controlled	Register name	Reference
DMACR	All	Entire DMAC configuration register	5.2
DMACA0	ch.0	Configuration A register	5.3
DMACB0		Configuration B register	5.4
DMACSA0		Transfer source address register	5.5
DMACDA0		Transfer destination address register	5.6
DMACA1	ch.1	Configuration A register	5.3
DMACB1		Configuration B register	5.4
DMACSA1		Transfer source address register	5.5
DMACDA1		Transfer destination address register	5.6
DMACA2	ch.2	Configuration A register	5.3
DMACB2		Configuration B register	5.4
DMACSA2		Transfer source address register	5.5
DMACDA2		Transfer destination address register	5.6
DMACA3	ch.3	Configuration A register	5.3
DMACB3		Configuration B register	5.4
DMACSA3		Transfer source address register	5.5
DMACDA3		Transfer destination address register	5.6
DMACA4	ch.4	Configuration A register	5.3
DMACB4		Configuration B register	5.4
DMACSA4		Transfer source address register	5.5
DMACDA4		Transfer destination address register	5.6
DMACA5	ch.5	Configuration A register	5.3
DMACB5		Configuration B register	5.4
DMACSA5		Transfer source address register	5.5
DMACDA5		Transfer destination address register	5.6
DMACA6	ch.6	Configuration A register	5.3
DMACB6		Configuration B register	5.4
DMACSA6		Transfer source address register	5.5
DMACDA6		Transfer destination address register	5.6
DMACA7	ch.7	Configuration A register	5.3
DMACB7		Configuration B register	5.4
DMACSA7		Transfer source address register	5.5
DMACDA7		Transfer destination address register	5.6

5.2. Entire DMAC Configuration Register (DMACR)

This section explains entire DMAC configuration register (DMACR).

bit	31	30	29	28	27	26	25	24	23	22	21	20	19	18	17	16
Field	DE	DS	Reserved	PR	DH[3:0]				Reserved							
Attribute	R/W	R/W	R/W	R/W	R/W				R/W							
Initial Value	0	0	0	0	0000				00000000							

bit	15	14	13	12	11	10	9	8	7	6	5	4	3	2	1	0
Field	Reserved															
Attribute	R/W															
Initial Value	0x0000															

[bit31] DE : DMA Enable (all-channel operation enable bit)

This bit controls the enabling and disabling of transfer operations for all of the channels.
When "1" is set to this bit, the operations of all of the channels are enabled and each channel operates according to its settings.
When "0" is set to this bit, the operations of all of the channels are disabled, and no transfer is performed until "1" is set to the bit. Also, a channel in the middle of its transfer operation is forced to stop the transfer.

This bit can be used to force all of the channels that are currently performing a transfer to stop it and reset the configuration register.

Value	Function
0	Disables the operations of all of the channels. (Initial value)
1	Enables the operations of all of the channels.

[bit30] DS : DMA Stop

This bit indicates the transfer state of all of the channels.
If either of the following conditions is established during transfer operation, the bit is set to "1" by DMAC.

- When "0" is written to the DMACR:DE bit and then the transfers of all of the channels are completed.
- When a value other than "0000" is written to the DMACR:DH bit and then the transfers of all of the channels pause.

When DMACR:DE=1 and DMACR:DH=0000 are set and all of the channels become enabled to operate, this bit is set to "0" by DMAC.

Although the attribute of this bit is R/W, writing to it by CPU does not affect DMAC's operation. If, however, the DMACR register needs to be updated without affecting the state of this bit, first read from this bit and then rewrite the same value.

Value	Function
0	Clears the disabling of all-channel operation or the setting of all-channel pause. (Initial value)
1	The transfers of all of the channels have stopped due to the disabling of all-channel operation or the setting of all-channel pause.

[bit29] Reserved: Reserved bit

[bit28] PR : Priority Rotation

This bit controls the order of transfer priority among channels.
When this bit is set to "0", the priority order is fixed for all of the channels.
When this bit is set to "1", the priority order is determined in a rotation method for all of the channels.

Value	Function
0	Fixes the priority order. (ch.0>ch.1>ch.2>ch.3>ch.4>ch.5>ch.6>ch.7) (Initial value)
1	Applies the rotation method to the priority order.

For selection of the transfer priority order, see Section "3.5 Channel Priority Control".

[bit27:24] DH : DMA Halt (All-channel pause bit)

This bit controls the pause/cancellation of transfer operations for all of the channels.
When this bit is set to a value other than "0000", all of the channels that are currently performing a transfer are put on pause. When it is set to "0000", the transfers are resumed.

Even if a transfer request from an external/peripheral device is asserted, the channels in Pause state ignore the transfer request. In the cases of Block transfer and Burst transfer, the relevant channel does not start a transfer, even if the pause is cleared. In order to complete a transfer when a pause is set during the transfer, an additional transfer request is required after the pause is cancelled.

This bit can be used to put a transfer on pause without resetting the configuration registers of all of the channels.

Value	Function
0000	Cancels the pause of transfers for all of the channels. (Initial value)
Other than 0000	Puts the transfers of all of the channels on pause.

5.3. Configuration A Register (DMACA)

This section explains configuration A register (DMACA).

bit	31	30	29	28	27	26	25	24	23	22	21	20	19	18	17	16
Field	EB	PB	ST	IS[5:0]						Reserved			BC[3:0]			
Attribute	R/W	R/W	R/W	R/W						R/W			R/W			
Initial Value	0	0	0	000000						000			0000			

bit	15	14	13	12	11	10	9	8	7	6	5	4	3	2	1	0
Field	TC[15:0]															
Attribute	R/W															
Initial Value	0x0000															

[bit31] EB : Enable bit (individual-channel operation enable bit)

This bit controls the enabling and disabling of the transfer operation of an individual channel.
When this bit is set to "1", the relevant channel is enabled to operate and waits for a trigger to start its transfer operation (the DMACR:DE must be set to "1").
If the EM bit (DMACB[0]) is not set to "1", DMAC clears this bit to "0" upon the completion of the transfer.
When this bit is set to "0", the relevant channel is disabled to operate and does not perform transfer operation until it is set to "1". Also, if it is in the middle of transfer operation, it is forced to stop the transfer.
This bit can be used to force the relevant channel that is currently in transfer operation to stop it and reset the configuration register.

Value	Function
0	The operation of the relevant channel is disabled. (Initial value)
1	The operation of the relevant channel is enabled.

[bit30] PB : Pause bit (individual-channel pause bit)

This bit controls the pause/cancellation of the transfer operation of an individual channel.
When this bit is set to "1" and the relevant channel is currently in transfer operation, it puts the transfer on pause.
When this bit is set to "0", it resumes the transfer.

This bit is cleared to "0", when the transfer operation of the channel is completed.

Even if a transfer request from an external/peripheral device is asserted, the channels in Pause state ignore the transfer request. In the cases of Block transfer and Burst transfer, the relevant channel does not start a transfer, even if the pause is cleared. In order to complete a transfer when a pause is set during the transfer, an additional transfer request is required after the pause is cancelled.
This bit can be used to put a transfer on pause without resetting the configuration register of the relevant channel.

Value	Function
0	Cancels the pause of the transfer of the relevant channel.
1	Puts the transfer of the relevant channel on pause.

<Notes>

- In this case of setting this bit during DMACB.RC=”1”, DMACA.BC and DMACA.TC must be set to reload value along with this bit by word access.

[bit29] ST : Software Trigger

This bit is used to generate a software transfer request for an individual channel.
When this bit is set to "1", a trigger is generated by the software transfer request and the relevant channel starts its transfer. After the completion of the transfer, DMAC clears this bit to "0".
When this bit is set to "0" during the transfer, the transfer stops.

Value	Function
0	No software transfer request (Initial value)
1	Software transfer request available

[bit28:23] IS[5:0] : Input Select

These bits select the trigger for transfer requests.
When the transfer trigger is set to software request (ST=1), set the IS[5:0] bits to "000000".
When the transfer trigger is set to hardware request, specify which Peripheral’s interrupt signal to be used to start transfer. Any Peripheral can be selected for all of the channels.
The hardware transfer request signal to be connected to DMAC varies depending on the product. Check the transfer request signal to be connected in "2.2 I/O Signals of DMAC" before setting the selection.

Value	Function
000000	Software (Initial value)
100000	IDREQ[0]
100001	IDREQ[1]
100010	IDREQ[2]
100011	IDREQ[3]
100100	IDREQ[4]
100101	IDREQ[5]
100110	IDREQ[6]
100111	IDREQ[7]
101000	IDREQ[8]
101001	IDREQ[9]
101010	IDREQ[10]
101011	IDREQ[11]
101100	IDREQ[12]
101101	IDREQ[13]
101110	IDREQ[14]
101111	IDREQ[15]
110000	IDREQ[16]
110001	IDREQ[17]
110010	IDREQ[18]
110011	IDREQ[19]
110100	IDREQ[20]

Value	Function
110101	IDREQ[21]
110110	IDREQ[22]
110111	IDREQ[23]
111000	IDREQ[24]
111001	IDREQ[25]
111010	IDREQ[26]
111011	IDREQ[27]
111100	IDREQ[28]
111101	IDREQ[29]
111110	IDREQ[30]
111111	IDREQ[31]
Setting other than above	Setting is prohibited.

[bit22:20] Reserved: Reserved bits

[bit19:16] BC[3:0] : Block Count

These bits specify the number of blocks for Block/Burst transfer.
When the transfer mode is set to Demand transfer, set BC[3:0] to "0000".
Set the value "BC[3:0]=Number of blocks - 1". The maximum allowed number of blocks is 16.
The value of these bits can be read during a transfer. Normally, as one transfer source access or one transfer destination access is completed successfully, BC[3:0] is decreased by 1.

- In the case of DMACB:RC=1:
The value set when the transfer started is reloaded upon the completion of the transfer.
- In the case of DMACB:RC=0:
The value is set to "0" upon successful completion of the transfer, while the value remains the same value as set during the transfer suspension upon unsuccessful completion of the transfer.

bit19:16	Function
	Number of transfer blocks (Initial value : 0x0)

[bit15:0] TC[15:0] : Transfer Count

These bits specify the number of transfers for Block/Burst/Demand transfer.
Set the value "TC = Number of transfers - 1". The maximum allowed number of transfers is 65536.
The value of these bits can be read during a transfer. Normally, as the transfer of one block is completed, TC is decreased by 1.

- In the case of DMACB:RC=1
The value set when the transfer started is reloaded upon the completion of the transfer.
- In the case of DMACB:RC=0
The value is set to "0" upon successful completion of the transfer, while the value remains the same value as set during the transfer suspension upon unsuccessful completion of the transfer.

bit15:0	Function
	Number of transfers (Initial value : 0x0000)

5.4. Configuration B Register (DMACB)

This section explains configuration B register (DMACB).

bit	31	30	29	28	27	26	25	24	23	22	21	20	19	18	17	16
Field	Reserved		MS[1:0]		TW[1:0]		FS	FD	RC	RS	RD	EI	CI	SS[2:0]		
Attribute	R/W		R/W		R/W		R/W	R/W	R/W	R/W	R/W	R/W	R/W	R/W0		
Initial Value	00		00		00		0	0	0	0	0	0	0	000		

bit	15	14	13	12	11	10	9	8	7	6	5	4	3	2	1	0
Field	Reserved								Reserved							EM
Attribute	R/W								R/W							R/W
Initial Value	00000000								0000000							0

[bit31:30] Reserved: Reserved bits

[bit29:28] MS[1:0] : Mode Select

These bits select the transfer mode.

Value	Function
00	Block transfer mode (Initial value)
01	Burst transfer mode
10	Demand transfer mode
11	Reserved

[bit27:26] TW[1:0] : Transfer Width

These bits specify the bit width of transfer data.

Value	Function
00	Byte (8 bits) (Initial value)
01	Half-word (16 bits)
10	Word (32 bits)
11	Reserved

[bit25] FS : Fixed Source

This bit specifies whether to increment or fix the transfer source address.

Value	Function
0	Increments the transfer source address according to TW[1:0]. (Initial value)
1	Fixes the transfer source address.

[bit24] FD : Fixed Destination

This bit specifies whether to increment or fix the transfer destination address.

Value	Function
0	Increments the transfer destination address according to TW[1:0]. (Initial value)
1	Fixes the transfer destination address.

[bit23] RC : Reload Count (BC/TC reload)

This bit controls the reload function of BC[3:0] and TC[15:0].

When this bit is set to "1", the value set when the transfer started is reloaded to BC[3:0] and TC[15:0] upon completion of the transfer.

Value	Function
0	Disables the reload function of BC/TC. (Initial value)
1	Enables the reload function of BC/TC.

[bit22] RS : Reload Source

This bit controls the reload function of the transfer source address.

When this bit is set to "1", the value set when the transfer started is reloaded to DMACSA upon completion of the transfer.

Value	Function
0	Disables the reload function of the transfer source address. (Initial value)
1	Enables the reload function of the transfer source address.

[bit21] RD : Reload Destination

This bit controls the reload function of the transfer destination address (DMACDA).

When this bit is set to "1", the value set when the transfer started is reloaded to DMACDA upon completion of the transfer.

bit21	Function
0	Disables the reload function of the transfer destination address. (Initial value)
1	Enables the reload function of the transfer destination address.

[bit20] EI :Error Interrupt (unsuccessful transfer completion interrupt enable)

This bit enables or disables the notification of an interrupt when a transfer has been unsuccessfully completed.

When this bit is set to "1", an interrupt is issued if SS is in the following status upon completion of the transfer.

- Address overflow SS[2:0]=001
- Stop by transfer stop request from a Peripheral, or the disabling of transfer by the EB/DE bit SS[2:0]=010
- Transfer source access error SS[2:0]=011
- Transfer destination access error SS[2:0]=100

Value	Function
0	Disables an interrupt to be issued upon unsuccessful completion of transfer. (Initial value)
1	Enables an interrupt to be issued upon unsuccessful completion of transfer.

[bit19] CI :Completion Interrupt : (successful transfer completion interrupt enable)

This bit enables or disables the notification of an interrupt when a transfer has been successfully completed.
When this bit is set to "1", an interrupt is generated, if SS is set to successful completion upon completion of the transfer.

Value	Function
0	Disables an interrupt to be issued upon successful completion of transfer. (Initial value)
1	Enables an interrupt to be issued upon successful completion of transfer.

[bit18:16] SS[2:0] : Stop Status (stop status notification)

These bits represent a code that indicates the stop status or completion status of a transfer.
The following table shows the available codes.
If a successful transfer completion interrupt or unsuccessful transfer completion interrupt is issued, the interrupt signal is deasserted by writing "000" to these bits.

Value	Description
000	Initial value
001	Termination by transfer error (address overflow)
010	Termination by transfer stop request (stop by transfer stop request for Peripheral or the disabling of transfer by the EB/DE bit)
011	Termination by transfer error (transfer source access error)
100	Termination by transfer error (transfer destination access error)
101	Successful transfer completion
110	Reserved
111	Transfer on pause

If various errors occur simultaneously, the termination code is indicated according to the following priority.

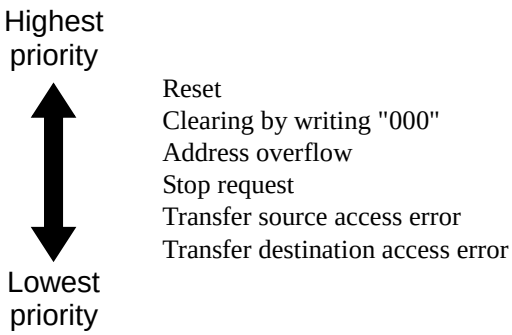

[bit15:8] Reserved: Reserved bits

When writing, always write "0". "0" is always read.

[bit7:1] Reserved: Reserved bits

[bit0] EM : Enable bit Mask (EB bit clear mask)

This bit is used to mask the clear of the EB bit (DMACA[31]) from DMAC upon completion of the transfer.

- In the case of EM=0
DMAC clears the EB bit (DMACA[31]) to "0" upon completion of the transfer.
- In the case of EM=1
It does not clear the EB bit upon completion of the transfer. This function allows transfers to be repeated without instruction from CPU.

This function can only be used for hardware transfer. To use the function, enable the reload function of RC, RS and RD bits.

Value	Function
0	Clear DMACA:EB bit (bit31) upon completion of the transfer. (Initial value)
1	Dose not clear DMACA:EB bit (bit31) upon completion of the transfer.

5.5. Transfer Source Address Register (DMACSA)

This section explains transfer source address register (DMACSA).

bit	31	30	29	28	27	26	25	24	23	22	21	20	19	18	17	16
Field	DMACSA[31:16]															
Attribute	R/W															
Initial Value	0x0000															

bit	15	14	13	12	11	10	9	8	7	6	5	4	3	2	1	0
Field	DMACSA[15:0]															
Attribute	R/W															
Initial Value	0x0000															

[bit31:0] DMACSA : DMAC Source Address

These bits specify the transfer start address of the transfer source.
It is not possible to specify an address causing an analingend transfer to the setting of W[1:0]. The value of these bits can be read during the transfer.

- In the case of DMACB:FS=1
The transfer source address is set to a fixed value and no change occurs.

- In the cases of DMACB:FS=0 and DMACB:RS=0
The value is incremented according to TW[1:0]. Upon successful transfer completion, it is the next address after the transfer completion address. Upon unsuccessful transfer completion, it is the value set during the suspension.

In the cases of DMACB:FS=0 and DMACB:RS=1
It is incremented according to TW[1:0] during the transfer. Upon completion of the transfer, the value set when the transfer started is reloaded.

	Function
bit31:0	Specifies the transfer source address from which the transfer starts. (Initial value: 0x00000000)

5.6. Transfer Destination Address Register (DMACDA)

This section explains transfer destination address register (DMACDA).

bit	31	30	29	28	27	26	25	24	23	22	21	20	19	18	17	16
Field	DMACDA[31:16]															
Attribute	R/W															
Initial Value	0x0000															

bit	15	14	13	12	11	10	9	8	7	6	5	4	3	2	1	0
Field	DMACDA[15:0]															
Attribute	R/W															
Initial Value	0x0000															

[bit31:0] DMACDA : DMAC Destination Address

These bits specify the transfer start address of the transfer destination.
It is not possible to specify an address causing an analingend transfer to the setting of W[1:0].. The value of these bits can be read during the transfer.

In the case of DMACB:FD=1, the transfer destination address is set to a fixed value and no change occurs.

In the cases of DMACB:FD=0 and DMACB:RD=0, the value is incremented according to TW[1:0]. Upon successful transfer completion, it is the next address after the transfer completion address. Upon unsuccessful transfer completion, it is the value set during the suspension.

In the cases of DMACB:FD=0 and DMACB:RD=1, it is incremented according to TW[1:0] during the transfer. Upon completion of the transfer, the value set when the transfer started is reloaded.

	Function
bit31:0	Transfer destination address from which DMA transfer starts (Initial value: 0x00000000)

6. Usage Precautions

This section explains the precautions on using DMAC.

■ Precautions on register setting

When setting DMAC register, please note the following.

- The DMACR, DMACA, DMACB, DMACSA and DMACDA registers can be accessed by byte, half-word and word.
- The register address in DMAC cannot be set to the DMACSA or DMACDA register.
- Channel setting registers cannot be changed during DMA transfer, except the DE/DH bits of DMACR, the EB/PB bits of DMACA and the EM bit of DMACB.

■ Precautions on STOP and TIMER mode transition

When transiting to STOP mode and TIMER mode, make sure to stop the operation of all channels of the DMAC and confirm the stop of the DMAC by DS flag. If the transition is made to STOP mode and TIMER mode while DMAC is operating, an unexpected operation can be executed when returning to RUN mode.

■ Note on Transfer Memory Space

Do not execute the taransfer to the bit band area.

CHAPTER 10: I/O Port

This chapter explains the I/O port.

1. Overview
2. Configuration, Block Diagram, and Operation
3. Setup Procedure Example
4. Registers
5. Usage Precautions

1. Overview

This section provides an overview of the I/O port.

The I/O port of this series provides the following features.

- The I/O port of this series shares the following functions.
  - GPIO
    General-purpose I/O ports, which can read an input level and set an output level from the CPU.
  - Peripheral input/output
    Digital input/output signal ports of peripheral functions.
  - Special I/O ports
    - Analog input port
      An analog input port of an A/D converter and LCD controller.
    - Analog output port
      An analog output port of a D/A converter and LCD controller.
    - USB port
    - Oscillation port
- The followings settings can be made for each pin.
  - You can set whether the I/O port will be used as a GPIO, a digital pin of peripheral functions, or a special pin.
  - You can set whether the I/O port will be used as an input port or an output port.
  - You can enable or disable pull-up.
  - Peripheral functions are assigned to two or more I/O ports with input/output of the same function. You can set to which I/O port the function can be allocated (relocation function).
  - By setting registers, you can set the I/O port to Hi-Z status while the CPU is in standby mode.

2. Configuration, Block Diagram, and Operation

This section explains the configuration, block diagram, and operation of the I/O port.

■ Configuration of the I/O Port

By setting registers of the I/O port, select Input/Output direction and select GPIO/peripheral.
Figure 2-1 shows the details of the I/O port.

Figure 2-1 Block Diagram of the I/O Port

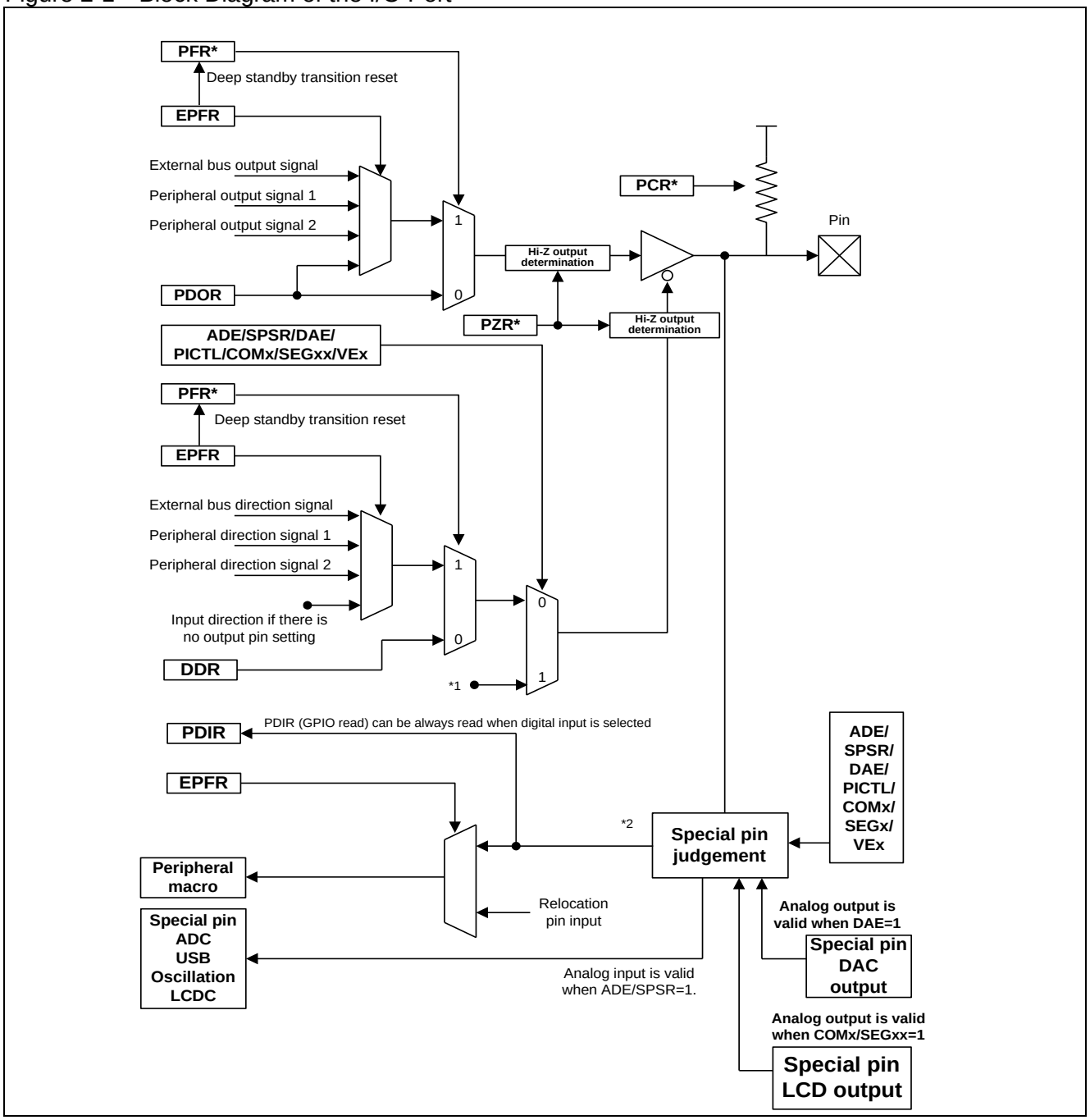

*1: When one of the followings is set, I/O port is set to input direction.

- ADE/SPSR=1
- DAE=1
- PICTL=0
- PICTL=1 and COMx/SEGxx=1
- VEx=1

*2: When one of the followings is set, the input value is fixed to "0".

Otherwise, the pin is set as the digital input pin.

- ADE/SPSR=1
- DAE=1
- PICTL=0
- PICTL=1 and COMx/SEGxx=1
- VEx=1

<Notes>

- USB pin does not have pull-up resistor.
- For some products, 5V tolerant I/O does not have a pull-up resistor.
- If it does not have a pull-up resistor, the PCR register setting is null.
- PZR register function is implemented only in some specific pins.
- Only pins described as "PZR register control is enabled" in the remarks column of "I/O CIRCUIT TYPE" of the Data Sheet can control this feature.
- PFR0 register is not initialized by deep standby transition reset.
- For details of DAE bit, "5.1. D/A Control Register (DACR)" in "10-bit D/A CONVERTER" in "Analog Macro Part".
- For details of PICTL/COMx/SEGxx/VEx bit, "5.3 LCDC Control Register 3 (LCDCC3)", "5.5 LCDC COM Output Enable Register (LCDC_COMEN)" and "5.6 LCDC SEG Output Enable Register 1/2 (LCDC_SEG1/2)" of "LCD CONTROLLER" in "Analog Macro Part".

Table 2-1 describes register function.

- The PFR, DDR, PDIR, PDOR, and PCR register have 1-bit control register for each I/O port and select a function for the I/O port.
- The ADE register has 1-bit control register for each I/O port which doubles as an analog input pin and selects a function for the I/O port.
- The SPSR register selects a function for the I/O port which doubles as a USB pin or an oscillation pin.
- The EPFR register has control register for each I/O pin of peripheral functions and selects to which I/O port an I/O pin of peripheral functions will be relocated.
- PZR register sets open drain control in pseudo mode by the Hi-Zing I/O port when outputting the High level of a particular pin.

Table 2-1 Register Function Descriptions

Register name	Function description
ADE	A register to set whether the I/O port will be used as a special pin (an analog input pin) or a digital input/output pin.
SPSR	A register to set whether the I/O port will be used as a special pin (USB or oscillation) or a digital input/output pin.
PFR	A register to set whether the I/O port will be used as an input/output pin of GPIO function or an input/output pin of peripheral functions.
PCR	A register to set whether a pull-up resistor of the I/O port will be connected or disconnected if the I/O port is used as a digital input pin or a digital bidirectional pin.
DDR	A register to set whether the I/O port will be used as an input pin or an output pin if the I/O port is used as a GPIO function pin. Note: If a pin is selected as an I/O pin of peripheral functions, a setting value is invalid.
PDIR	A register to read the level status of the I/O port. · If the I/O port is used as a digital input pin, it reads input level. · If the I/O port is used as a digital output pin, it reads output level. · If the I/O port is used as an analog input pin, it always reads "0".
PDOR	A register to set output level if the I/O port is used as an output pin of GPIO function. · When "0" is set, it outputs Low level. · When "1" is set, it outputs High level. Note: If a pin is selected as GPIO input or input/output of peripheral functions, a setting value is invalid.
EPFR	A register to select a function for an input/output of peripheral functions and set relocation function. · Setting a peripheral output pin It sets whether to produce output for the I/O port or not. In addition, it can also set to which I/O port a pin of peripheral functions will be relocated for each pin. · Setting a peripheral input pin It can set to which I/O port a pin of peripheral functions will be relocated for each pin. · Setting a peripheral bidirectional pin It can set to which I/O port a pin of peripheral functions will be relocated for each pin
PZR	This register sets open the drain control of the I/O port. · Set the I/O port to Low output when the I/O port is outputting Low level (pull-up disconnection regardless of PCR setting value) · Set open drain control in pseudo mode by setting the I/O port on Hi-Z status when the I/O port outputs High level (pull-up disconnection regardless of PCR setting value) · Set the I/O port on Hi-Z status when the I/O port is used for input (pull-up disconnection regardless of PCR setting value) Note: This function is implemented only in some specific pins. Only pins described as "PZR register control is enabled" in the remarks column of "I/O CIRCUIT TYPE" of the Data Sheet can control the open drain.

Table 2-2 lists pin functions which availability depends on selected I/O port functions and register setting values.

Table 2-2 I/O Port Functions and Register Setting Values

I/O Port Function		ADE/ SPSR/ DAE/ COMx/ SEGx/ VEx	PFR	DDR	PZR	PCR	EPFR
Available main function	Available sub function						
Special pin (Analog input, Analog output, USB, Oscillation)	N/A	1	-	-	-	Disconnect	*0
GPIO function input pin	Peripheral function input pin	0	0	0	0	Valid	*1
				0	1	Disconnect	
GPIO function output pin	GPIO function input pin (FB) Peripheral function input pin (FB)			1	0	Disconnect	
				1	1	Disconnect	
Peripheral function output pin	GPIO function input pin (FB) Peripheral function input pin (FB)		1	-	0	Disconnect	*2
					1	Disconnect	
Peripheral function bidirectional pin	GPIO function input pin (FB) Peripheral function input pin (FB)				0	Valid	*3
					1	Disconnect	
Peripheral function input pin	GPIO function input pin				0	Valid	*4
					1	Disconnect	

Legends

- - : Indicates that a register setting value does not affect pin functions.
- Valid : Indicates that a pull-up resistor is disconnected if PCR register value is 0.
  Indicates that a pull-up resistor is connected if PCR register value is 1.
- Disconnect : Indicates that a pull-up resistor is disconnected regardless of PCR register value.
- (FB) : Indicates that an output signal of the I/O port provides feedback and the level of the I/O port can be read from PDIR. The signal can be also used as input for peripheral functions.

*0: If the input pin of peripheral functions is selected for the I/O port, the setting is invalid.
If the output pin of peripheral functions is selected for the I/O port, the setting is invalid.
If the bidirectional pin of peripheral functions is selected for the I/O port, the setting is invalid.

*1: If the input pin of peripheral functions is selected for the I/O port, the setting is valid.
If the output pin of peripheral functions is selected for the I/O port, the setting is invalid.
If the bidirectional pin of peripheral functions is selected for the I/O port, the setting is invalid.

*2: Indicates that the output pin of peripheral functions is selected for the I/O port.

*3: Indicates that the bidirectional pin of peripheral functions is selected for the I/O port.

*4: Indicates that neither the output pin nor the bidirectional pin of peripheral functions is selected for the I/O port.

■ Initially Selected Functions for the I/O Port

Table 2-3 describes initially selected functions for each I/O port after reset is released.

Table 2-3 Initially Selected Functions for Each I/O Port after Reset Is Released

No	Pin	Initially selected function
1	TRSTX, TCK, TDI, TMS, TDO	JTAG pin is selected. Pull-up is enabled.
2	ANxx	Can be used as an analog input pin. Digital input is cut off and "0" is input.
3	X0,X1,X0A, X1A	Can be used as an oscillation pin. Digital input is cut off and "0" is input.
4	All GPIO pins other than the above pins	Digital input. Output is Hi-Z.

Note: For the status of pins other than GPIO (MD pins, a reset pin), see "Data Sheet" of the product used. All the output selection values of EPFR during reset are "no output".

■ Relocation Function

- Some input/output of peripheral functions have more than one pin (relocation pin).
  One of the pins can be selected by setting EPFR. Figure 2-2 show the schematic view of relocation function.

Figure 2-2 Schematic View of Relocation Function

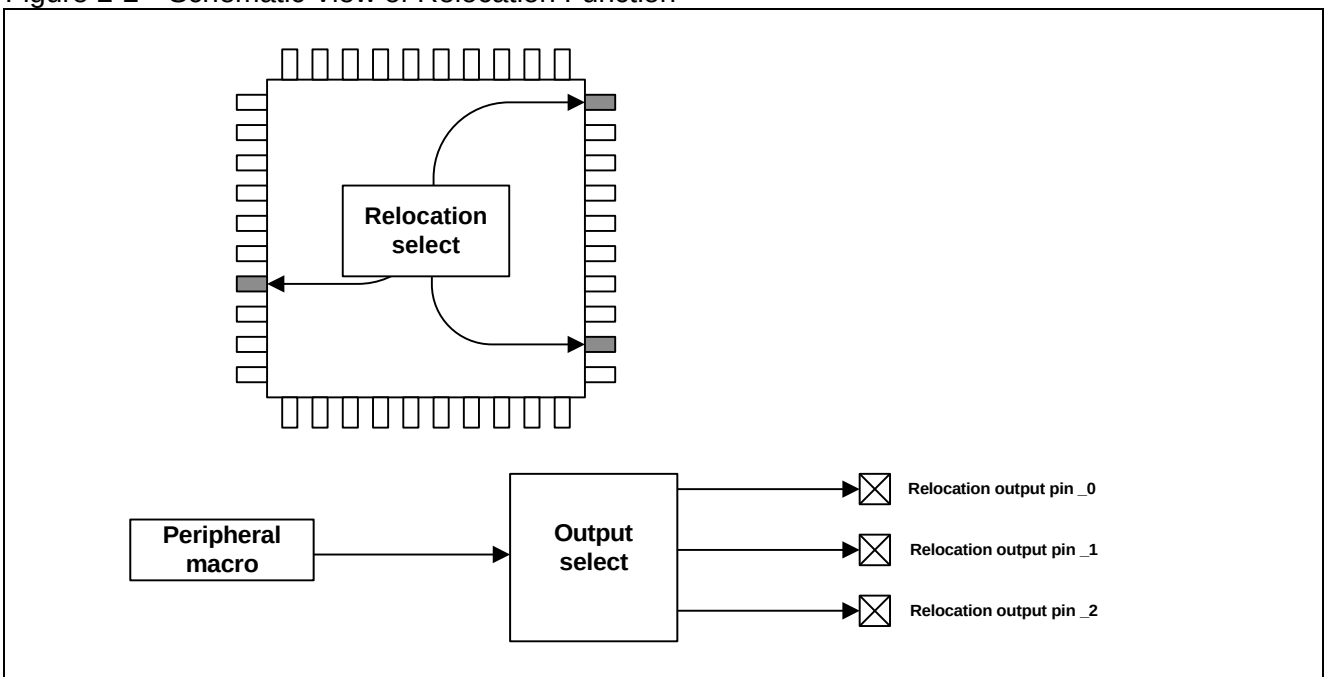

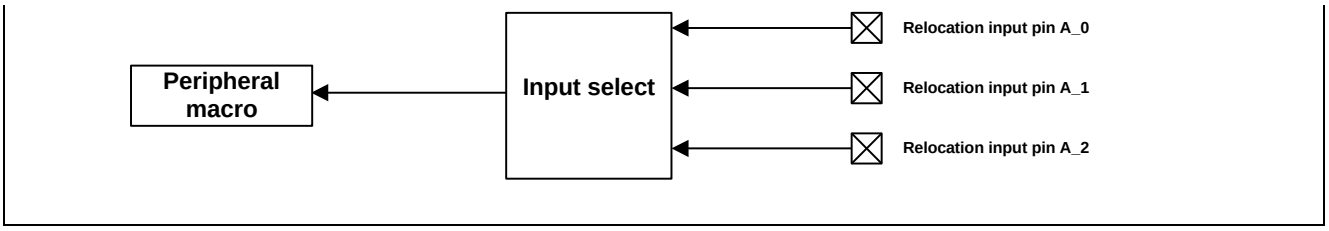

Note: Which peripheral function is allocated to which pin depends on products.
See the pin function list of "Data Sheet" of the product used.

- Even if the input of one I/O port is connected to two or more peripheral functions, all peripheral inputs can be used by setting EPFR. For example, in Figure 2-3, by selecting input for both "Relocation input pin A_2" and "Relocation input pin B_1", simultaneous usage is possible. In this way, it is possible to use external interrupt and a multi-function serial input pin shared by one I/O port simultaneously.

Figure 2-3 Multiple Peripheral Inputs

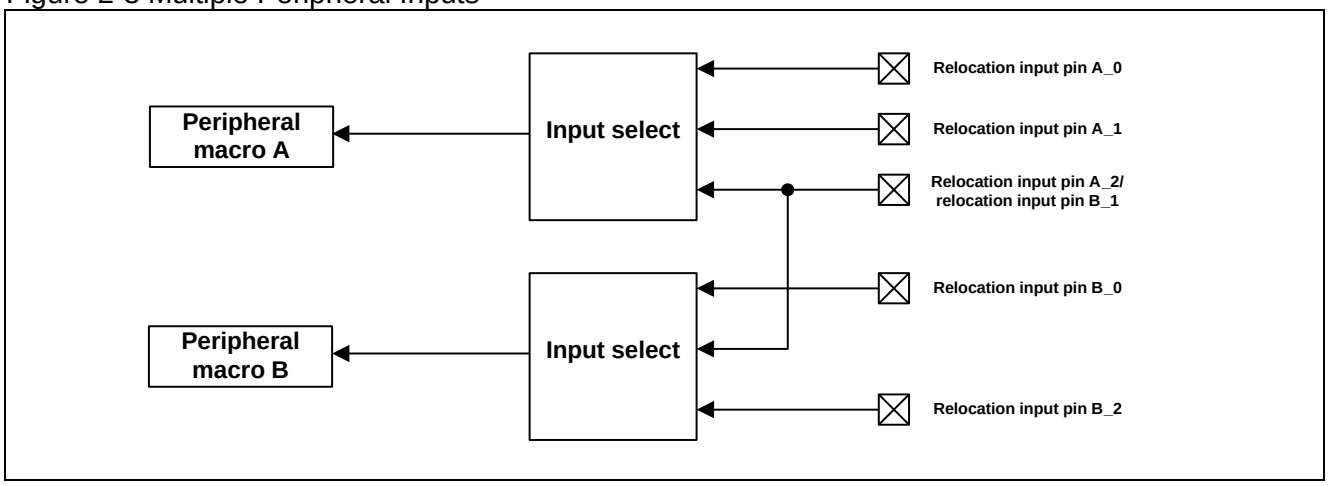

- Even if an I/O pin is set as output, it can work as an input pin because input is not masked. For example, timer output can be used as external interrupt input which is shared.

■ Fixed Priority of EPFR Outputs

Only one output pin function among two or more outputs is allocated to one I/O port.
By setting the EPFR register, if more than one output is set, fixed priority is applied and output pins are selected.
Figure 2-4 shows output pins and fixed priority.

Figure 2-4 Output Pins and Fixed Priority

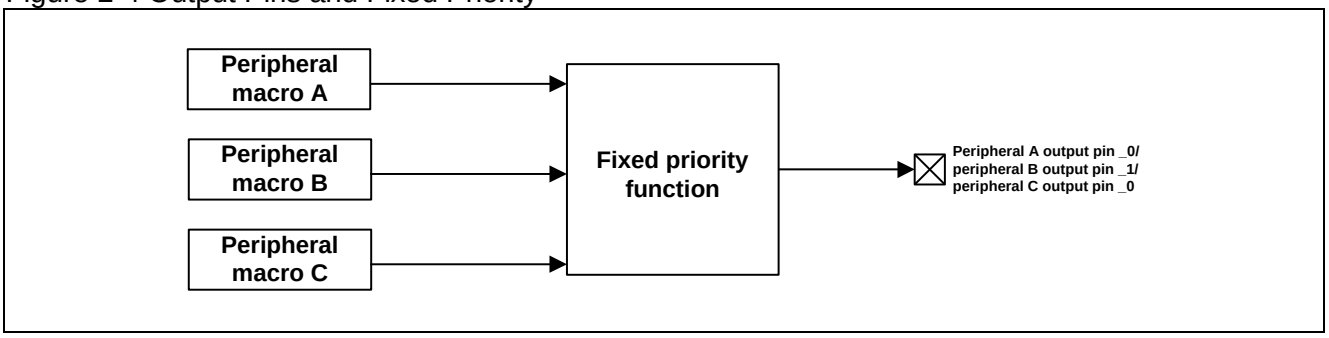

Table 2-4 describes the fixed priority of EPFR.

Table 2-4 Fixed Priority of EPFR

Priority Higher	Peripheral function	Applied pin
↓	Special input	JTAG input, NMI input*1
↓	JTAG, trace	Output pin, I/O pin
↓	Ethernet	I/O
↓	USB (HCONX)	Output pin
↓	CAN	Output pin
↓	Multi-function serial	Output pin, I/O pin
↓	Base timer output	I/O pin
↓	Multi-function timer	Output pin
↓	External bus	Output pin, I/O pin
↓	Internal CR waveform output	Output pin
↓	RTC Output	Output pin
Priority Lower	SUBCLK Output	Output pin

Note: The fixed priority is only applicable when "output" is set for more than one function. In case of "input", there is no fixed priority.
However, "Special input" has a higher priority than any other "output" setting. When "Special input" is set, the "output" setting allocated to the same port is invalid.
*1: NMI input in not special input for TYPE0, TYPE3, and TYPE7 products.

- Due to output setting on the lower part of the priority, the EPFR register always includes "no output" setting.
- If you are going to use a pin as an external input pin of peripheral functions, disable all shared output settings. If every output of a pin is not selected by the EPFR register, the pin works as an external input pin.

■ Operation in deep standby mode

GPIO function is selected in deep standby mode. Figure 2-5 shows I/O port operation in deep standby mode.

Figure 2-5 I/O port operation in deep standby mode

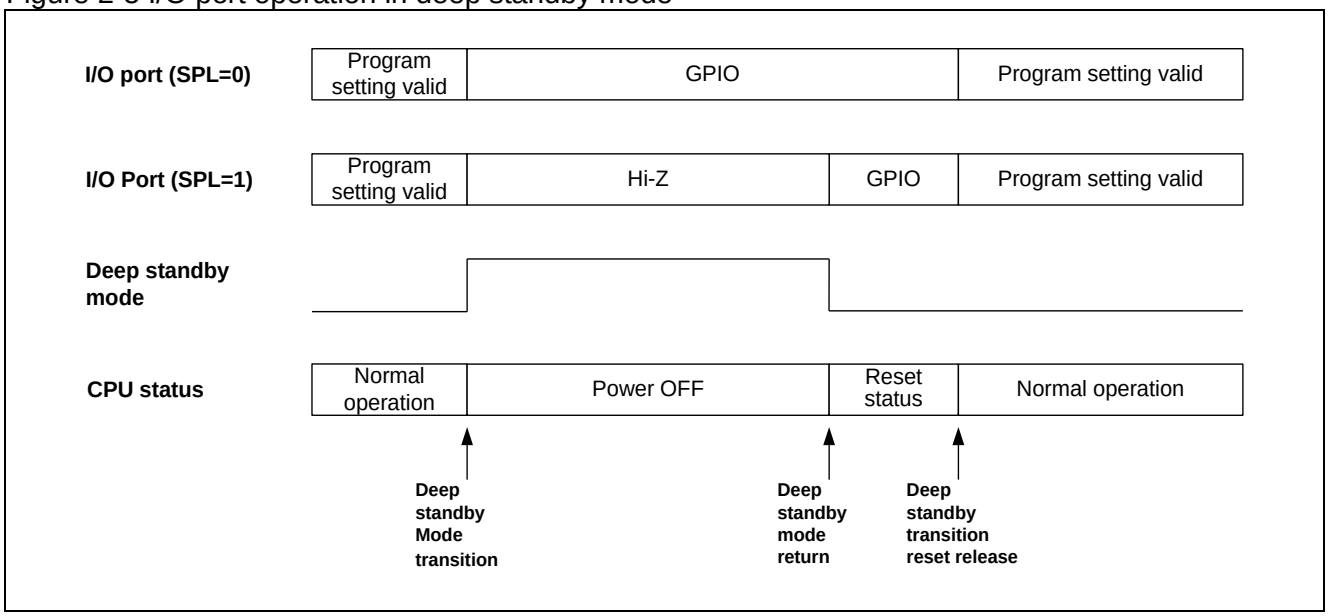

<Note>

For the state of each pin in deep standby mode, refer to the pin state table in the "Data Sheet" of the product used.

3. Setup Procedure Example

This section explains a procedure example of setting up the I/O port.

■ Setup of the I/O Port

By setting registers of the I/O port, select I/O direction and select GPIO/peripheral.
Figure 3-1 shows a setup procedure example.

Figure 3-1 Setup Procedure Example of the I/O Port

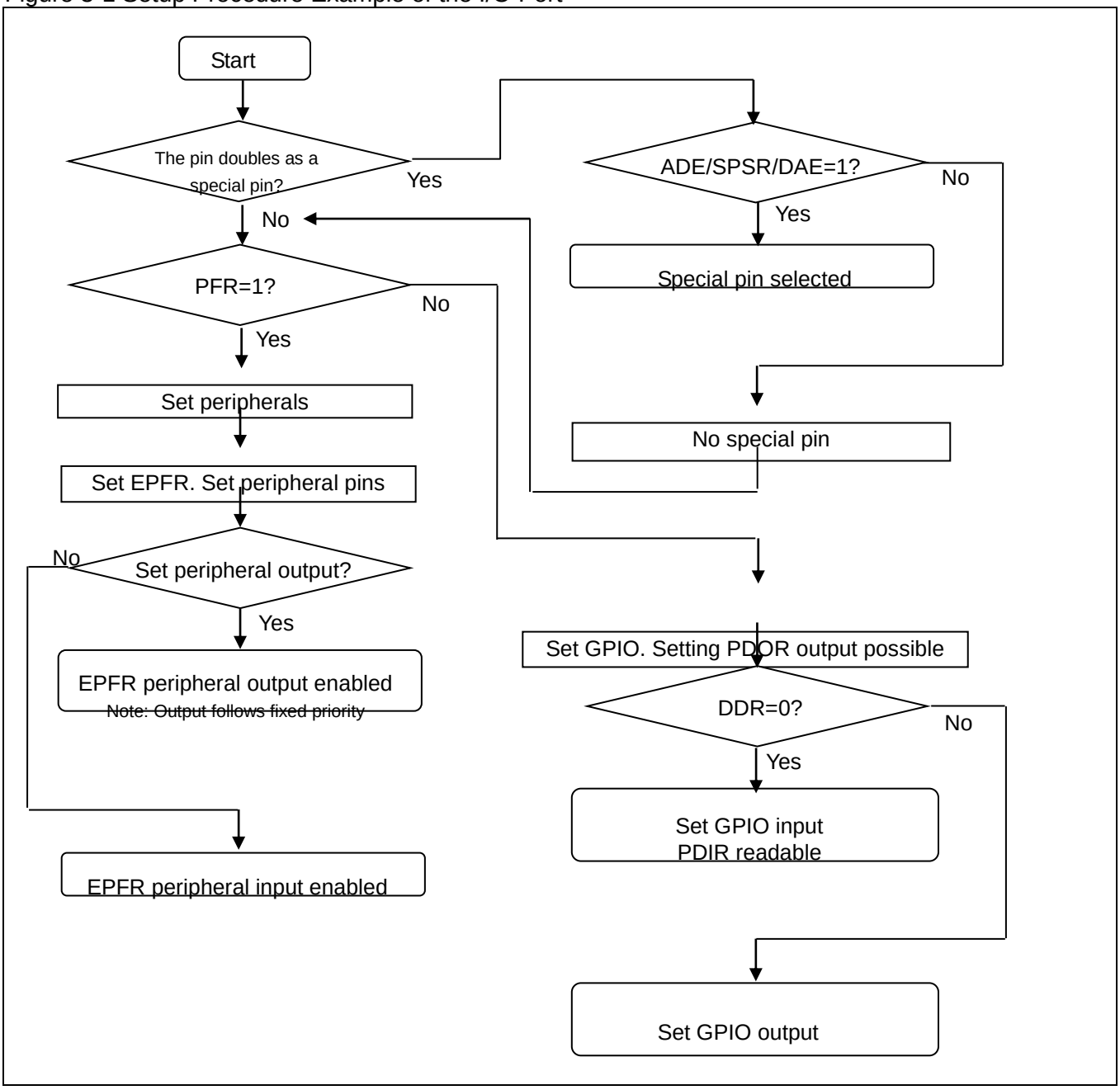

4. Registers

This section provides the register list of the I/O port.

Table 4-1 provides the register list.

Table 4-1 Register List of the I/O Port

Abbreviation	Register name	Reference
PFR0	Port function setting register 0	4.1
PFR1	Port function setting register 1	
PFR2	Port function setting register 2	
PFR3	Port function setting register 3	
PFR4	Port function setting register 4	
PFR5	Port function setting register 5	
PFR6	Port function setting register 6	
PFR7	Port function setting register 7	
PFR8	Port function setting register 8	
PFR9	Port function setting register 9	
PFRA	Port function setting register A	
PFRB	Port function setting register B	
PFRC	Port function setting register C	
PFRD	Port function setting register D	
PFRE	Port function setting register E	
PFRF	Port function setting register F	
PCR0	Pull-up setting register 0	4.2
PCR1	Pull-up setting register 1	
PCR2	Pull-up setting register 2	
PCR3	Pull-up setting register 3	
PCR4	Pull-up setting register 4	
PCR5	Pull-up setting register 5	
PCR6	Pull-up setting register 6	
PCR7	Pull-up setting register 7	
PCR9	Pull-up setting register 9	
PCRA	Pull-up setting register A	
PCRB	Pull-up setting register B	

Abbreviation	Register name	Reference
PCRC	Pull-up setting register C	4.2
PCRD	Pull-up setting register D	
PCRE	Pull-up setting register E	
PCRF	Pull-up setting register F	
DDR0	Port input/output direction setting register 0	4.3
DDR1	Port input/output direction setting register 1	
DDR2	Port input/output direction setting register 2	
DDR3	Port input/output direction setting register 3	
DDR4	Port input/output direction setting register 4	
DDR5	Port input/output direction setting register 5	
DDR6	Port input/output direction setting register 6	
DDR7	Port input/output direction setting register 7	
DDR8	Port input/output direction setting register 8	
DDR9	Port input/output direction setting register 9	
DDRA	Port input/output direction setting register A	
DDRB	Port input/output direction setting register B	
DDRC	Port input/output direction setting register C	
DDRD	Port input/output direction setting register D	
DDRE	Port input/output direction setting register E	
DDRF	Port input/output direction setting register F	
PDIR0	Port input data register 0	4.4
PDIR1	Port input data register 1	
PDIR2	Port input data register 2	
PDIR3	Port input data register 3	
PDIR4	Port input data register 4	
PDIR5	Port input data register 5	
PDIR6	Port input data register 6	
PDIR7	Port input data register 7	
PDIR8	Port input data register 8	
PDIR9	Port input data register 9	
PDIRA	Port input data register A	
PDIRB	Port input data register B	

Abbreviation	Register name	Reference
PDIRC	Port input data register C	4.4
PDIRD	Port input data register D	
PDIRE	Port input data register E	
PDIRF	Port input data register F	
PDOR0	Port output data register 0	4.5
PDOR1	Port output data register 1	
PDOR2	Port output data register 2	
PDOR3	Port output data register 3	
PDOR4	Port output data register 4	
PDOR5	Port output data register 5	
PDOR6	Port output data register 6	
PDOR7	Port output data register 7	
PDOR8	Port output data register 8	
PDOR9	Port output data register 9	
PDORA	Port output data register A	
PDORB	Port output data register B	
PDORC	Port output data register C	
PDORD	Port output data register D	
PDORE	Port output data register E	
PDORF	Port output data register F	
ADE	Analog input setting register	4.6
SPSR	Special Port Setting Register	4.27
EPFR00	Extended pin function setting register 00	4.8
EPFR01	Extended pin function setting register 01	4.9
EPFR02	Extended pin function setting register 02	4.10
EPFR03	Extended pin function setting register 03	4.11
EPFR04	Extended pin function setting register 04	4.12
EPFR05	Extended pin function setting register 05	4.13
EPFR06	Extended pin function setting register 06	4.14
EPFR07	Extended pin function setting register 07	4.15

Abbreviation	Register name	Reference
EPFR08	Extended pin function setting register 08	4.16
EPFR09	Extended pin function setting register 09	4.17
EPFR10	Extended pin function setting register 10	4.18
EPFR11	Extended pin function setting register 11	4.19
EPFR12	Extended pin function setting register 12	4.20
EPFR13	Extended pin function setting register 13	4.21
EPFR14	Extended pin function setting register 14	4.22
EPFR15	Extended pin function setting register 15	4.23
EPFR16	Extended pin function setting register 16	4.24
EPFR17	Extended pin function setting register 17	4.25
EPFR18	Extended pin function setting register 18	4.26
PZR0	Port pseudo open drain setting register 0	4.28
PZR1	Port pseudo open drain setting register 1	
PZR2	Port pseudo open drain setting register 2	
PZR3	Port pseudo open drain setting register 3	
PZR4	Port pseudo open drain setting register 4	
PZR5	Port pseudo open drain setting register 5	
PZR6	Port pseudo open drain setting register 6	
PZR7	Port pseudo open drain setting register 7	
PZR8	Port pseudo open drain setting register 8	
PZR9	Port pseudo open drain setting register 9	
PZRA	Port pseudo open drain setting register A	
PZRB	Port pseudo open drain setting register B	
PZRC	Port pseudo open drain setting register C	
PZRD	Port pseudo open drain setting register D	
PZRE	Port pseudo open drain setting register E	
PZRF	Port pseudo open drain setting register F	

4.1. Port Function Setting Register (PFRx)

The PFRx register selects usage of a pin.

■ List of PFR Register Configuration

bit 31 16	15 0	Initial value	Attribute	Corresponding port
Reserved	PFR0	0x001F	R/W	P0F to P00
Reserved	PFR1	0x0000	R/W	P1F to P10
Reserved	PFR2	0x0000	R/W	P2F to P20
Reserved	PFR3	0x0000	R/W	P3F to P30
Reserved	PFR4	0x0000	R/W	P4F to P40
Reserved	PFR5	0x0000	R/W	P5F to P50
Reserved	PFR6	0x0000	R/W	P6F to P60
Reserved	PFR7	0x0000	R/W	P7F to P70
Reserved	PFR8	0x0000	R/W	P8F to P80
Reserved	PFR9	0x0000	R/W	P9F to P90
Reserved	PFRA	0x0000	R/W	PAF to PA0
Reserved	PFRB	0x0000	R/W	PBF to PB0
Reserved	PFRC	0x0000	R/W	PCF to PC0
Reserved	PFRD	0x0000	R/W	PDF to PD0
Reserved	PFRE	0x0000	R/W	PEF to PE0
Reserved	PFRF	0x0000	R/W	PFF to PF0

■ Detailed Register Configuration

bit	31 16	15 0
Field	Reserved	PFRx

■ Register Function

[bit31:16] Reserved: Reserved bits

"0x0000" is read out from these bits.

When writing these bits, set them to "0x0000".

[bit15:0] PFRx: Port Function Setting Register x

Selects usage of a pin.

Process		Description
Reading		Can read out the setting value of the register.
Writing	0	Uses a pin as a GPIO pin.
	1	Uses a pin as an input/output pin of peripheral functions.

<Notes>

- The "x" of PFRx is a wildcard. PFRx indicates PFR0, PFR1, PFR2, etc.
- The "x" of Px0 and PxF is a wildcard. Px0 indicates P00, P10, P20, etc. PxF indicates P0F, P1F, P2F, etc.
- Functions can be set for 16 ports from PxF to Px0.
- Each bit in the register sets each pin individually. There is a one-to-one correspondence between bit assignment and the order of pins. For example, the 15th bit of PFR0 sets P0F, the 14th bit of PFR0 sets P0E, and the 0th bit of PFR0 sets P00.
- As a JTAG pin is selected for P04 to P00, the initial value is "1".
- For a pin which is not available in your product, writing a value to the bit is invalid, and the read value is undefined.
  bit[4:0] of PFR0 register is not initialized by deep standby transition reset.

4.2. Pull-up Setting Register (PCRx)

The PCRx register sets pull-up of a pin.

■ List of PCR Register Configuration

bit 31 16	15 0	Initial value	Attribute	Corresponding port
Reserved	PCR0	0x001F	R/W	P0F to P00
Reserved	PCR1	0x0000	R/W	P1F to P10
Reserved	PCR2	0x0000	R/W	P2F to P20
Reserved	PCR3	0x0000	R/W	P3F to P30
Reserved	PCR4	0x0000	R/W	P4F to P40
Reserved	PCR5	0x0000	R/W	P5F to P50
Reserved	PCR6	0x0000	R/W	P6F to P60
Reserved	PCR7	0x0000	R/W	P7F to P70
Reserved	PCR8	0x0000	R/W	P8F to P80
Reserved	PCR9	0x0000	R/W	P9F to P90
Reserved	PCRA	0x0000	R/W	PAF to PA0
Reserved	PCRB	0x0000	R/W	PBF to PB0
Reserved	PCRC	0x0000	R/W	PCF to PC0
Reserved	PCRD	0x0000	R/W	PDF to PD0
Reserved	PCRE	0x0000	R/W	PEF to PE0
Reserved	PCRF	0x0000	R/W	PFF to PF0

■ Detailed Register Configuration

bit	31 16	15 0
Field	Reserved	PCRx

■ Register Function

[bit31:16] Reserved: Register bits

"0x0000" is read out from these bits.

When writing these bits, set them to "0x0000".

[bit15:0] PCRx: Pull-up Setting Register x

Sets pull-up of a pin

Process		Description
Reading		Can read out the setting value of the register.
Writing	0	Disconnects the pull-up resistor of a pin.
	1	When a pin is in input status (for both GPIO and peripheral functions), the pull-up resistor is connected. When a pin is in output status, the pull-up resistor is disconnected.

<Notes>

- The "x" of PCRx is a wildcard. PCRx indicates PCR0, PCR1, PCR2, etc.
- The "x" of Px0 and PxF is a wildcard. Px0 indicates P00, P10, P20, etc. PxF indicates P0F, P1F, P2F, etc.
- One register allows setting 16 pull-ups from PxF to Px0.
- Each bit in the register sets each pin individually. There is a one-to-one correspondence between bit assignment and the order of pins. For example, the 15th bit of PCR0 sets P0F, the 14th bit of PCR0 sets P0E, and the 0th bit of PCR0 sets P00.
- As a JTAG pin is selected for P00 to P04, the initial value is "1".
- When using I^2C function, use external pull-up by setting PCRx=0.
- PCR8 is available for TYPE8 products only. This register doesn’t exist in products other than TYPE8.
- For a pin which is not available in your product, writing a value to the bit is invalid, and the read value is undefined.
- PE0, PE1 ports do not have a pull-up resistor. Because of this, writing a value to PE register is invalid. An initial value or a write value is read in this register.
- CRx register is not initialized by deep standby transition reset.

4.3. Port input/output Direction Setting Register (DDRx)

The DDRx register sets input/output direction of a pin.

■ List of DDR Register Configuration

bit 31 16	15 0	Initial value	Attribute	Corresponding port
Reserved	DDR0	0x0000	R/W	P0F to P00
Reserved	DDR1	0x0000	R/W	P1F to P10
Reserved	DDR2	0x0000	R/W	P2F to P20
Reserved	DDR3	0x0000	R/W	P3F to P30
Reserved	DDR4	0x0000	R/W	P4F to P40
Reserved	DDR5	0x0000	R/W	P5F to P50
Reserved	DDR6	0x0000	R/W	P6F to P60
Reserved	DDR7	0x0000	R/W	P7F to P70
Reserved	DDR8	0x0000	R/W	P8F to P80
Reserved	DDR9	0x0000	R/W	P9F to P90
Reserved	DDRA	0x0000	R/W	PAF to PA0
Reserved	DDRB	0x0000	R/W	PBF to PB0
Reserved	DDRC	0x0000	R/W	PCF to PC0
Reserved	DDRD	0x0000	R/W	PDF to PD0
Reserved	DDRE	0x0000	R/W	PEF to PE0
Reserved	DDRF	0x0000	R/W	PFF to PF0

■ Detailed Register Configuration

bit	31 16	15 0
Field	Reserved	DDRx

■ Register Function

[bit31:16] Reserved: Reserved bits

"0x0000" is read out from these bits.

When writing these bits, set them to "0x0000".

[bit15:0] DDRx: Port input/output Direction Setting Register x

Sets input/output direction of a pin.

Process		Description
Reading		Can read out the setting value of the register.
Writing	0	Uses GPIO in input direction. If a pin is selected as an input/output pin of peripheral functions, this setting value is invalid.
	1	Uses GPIO in output direction. If a pin is selected as an input/output pin of peripheral functions, this setting value is invalid.

<Notes>

- The "x" of DDRx is a wildcard. DDRx indicates DDR0, DDR1, DDR2, etc.
- The "x" of Px0 and PxF is a wildcard. Px0 indicates P00, P10, P20, etc. PxF indicates P0F, P1F, P2F, etc.
- One register allows setting the input/output direction of 16 ports from PxF to Px0.
- Each bit in the register sets each pin individually. There is a one-to-one correspondence between bit assignment and the order of pins. For example, the 15th bit of DDR0 sets P0F, the 14th bit of DDR0 sets P0E, and the 0th bit of DDR0 sets P00.
- If the output RTO of a multifunction timer is selected, in an emergency stop due to DTTIX signal, a DDR controls pin status. For more information, see the chapter "Multifunction Timer" in "Timer Part".
- For a pin which is not available in your product, writing a value to the bit is invalid, and the read value is undefined.
- DDRx register is not initialized by deep standby transition reset.

4.4. Port Input Data Register (PDIRx)

The PDIRx register indicates input data of a pin.

■ List of PDIR Register Configuration

bit 31 16	15 0	Initial value	Attribute	Corresponding port
Reserved	PDIR0	0x0000	R	P0F to P00
Reserved	PDIR1	0x0000	R	P1F to P10
Reserved	PDIR2	0x0000	R	P2F to P20
Reserved	PDIR3	0x0000	R	P3F to P30
Reserved	PDIR4	0x0000	R	P4F to P40
Reserved	PDIR5	0x0000	R	P5F to P50
Reserved	PDIR6	0x0000	R	P6F to P60
Reserved	PDIR7	0x0000	R	P7F to P70
Reserved	PDIR8	0x0000	R	P8F to P80
Reserved	PDIR9	0x0000	R	P9F to P90
Reserved	PDIRA	0x0000	R	PAF to PA0
Reserved	PDIRB	0x0000	R	PBF to PB0
Reserved	PDIRC	0x0000	R	PCF to PC0
Reserved	PDIRD	0x0000	R	PDF to PD0
Reserved	PDIRE	0x0000	R	PEF to PE0
Reserved	PDIRF	0x0000	R	PFF to PF0

■ Detailed Register Configuration

bit	31 16	15 0
Field	Reserved	PDIRx

■ Register Function

[bit31:16] Reserved: Reserved bits

"0x0000" is read out from these bits.

When writing these bits, set them to "0x0000".

[bit15:0] PDIRx: Port Input Data Register x

Reads out input data of a pin.

Process		Description
Reading	0	Regardless of pin function settings (PFR/EPFR/DDR/PDOR), it indicates that a pin is in the status of "L" level input or "L" level output. When a special pin is selected by ADE/SPSR, as input is cut off, 0 is always read out.
	1	Regardless of pin function settings (PFR/EPFR/DDR/PDOR), it indicates that a pin is in the status of "H" level input or "H" level output.
Writing		Writing does not affect anything.

<Notes>

- The "x" of PDIRx is a wildcard. PDIRx indicates PDIR0, PDIR1, PDIR2, etc.
- The "x" of Px0 and PxF is a wildcard. Px0 indicates P00, P10, P20, etc. PxF indicates P0F, P1F, P2F, etc.
- One register allows reading input data of 16 ports from PxF to Px0.
- Each bit in the register indicates the status of each pin individually. There is a one-to-one correspondence between bit assignment and the order of pins. For example, the 15th bit of PDIR0 indicates P0F, the 14th bit of PDIR0 indicates P0E, and the 0th bit of PDIR0 indicates P00.
- "0" is always read for a bit value of the pin which is not available in your product.
- PDIRx register is not initialized by deep standby transition reset.

4.5. Port Output Data Register x (PDORx)

The PDORx register sets output data to a pin.

■ List of PDOR Register Configuration

bit 31 16	15 0	Initial value	Attribute	Corresponding port
Reserved	PDOR0	0x0000	R/W	P0F to P00
Reserved	PDOR1	0x0000	R/W	P1F to P10
Reserved	PDOR2	0x0000	R/W	P2F to P20
Reserved	PDOR3	0x0000	R/W	P3F to P30
Reserved	PDOR4	0x0000	R/W	P4F to P40
Reserved	PDOR5	0x0000	R/W	P5F to P50
Reserved	PDOR6	0x0000	R/W	P6F to P60
Reserved	PDOR7	0x0000	R/W	P7F to P70
Reserved	PDOR8	0x0000	R/W	P8F to P80
Reserved	PDOR9	0x0000	R/W	P9F to P90
Reserved	PDORA	0x0000	R/W	PAF to PA0
Reserved	PDORB	0x0000	R/W	PBF to PB0
Reserved	PDORC	0x0000	R/W	PCF to PC0
Reserved	PDORD	0x0000	R/W	PDF to PD0
Reserved	PDORE	0x0000	R/W	PEF to PE0
Reserved	PDORF	0x0000	R/W	PFF to PF0

■ Detailed Register Configuration

bit	31 16	15 0
Field	Reserved	PDORx

■ Register Function

[bit31:16] Reserved: Reserved bits

"0x0000" is read out from these bits.

When writing these bits, set them to "0x0000".

[bit15:0] PDORx: Port Output Data Register x

Sets output data of a pin.

Process		Description
Reading		Reads out the register value.
Writing	0	Outputs "L" level to GPIO. If a pin is selected as I/O input or peripheral functions input/output, a setting value is invalid.
	1	Outputs "H" level to GPIO. If a pin is selected as I/O input or peripheral functions input/output, a setting value is invalid.

<Notes>

- The "x" of PDORx is a wildcard. PDORx indicates PDOR0, PDOR1, PDOR2, etc.
- The "x" of Px0 and PxF is a wildcard. Px0 indicates P00, P10, P20, etc. PxF indicates P0F, P1F, P2F, etc.
- One register allows setting output data of 16 ports from PxF to Px0.
- Each bit in the register sets each pin individually. There is a one-to-one correspondence between bit assignment and the order of pins. For example, the 15th bit of PDOR0 sets P0F, the 14th bit of PDOR0 sets P0E, and the 0th bit of PDOR0 sets P00.
- For a pin which is not available in your product, writing a value to the bit is invalid, and the read value is undefined.
- PDORx register is not initialized by deep standby transition reset.

4.6. Analog Input Setting Register (ADE)

The ADE register sets an external pin as an analog signal input pin of ADC.

■ Register Configuration

bit	31	0
Field	ADE	
Attribute	R/W	
Initial value	0xFFFFFFFF	

■ Register Function

[bit31:0] ADE: Analog Input Setting Register

Sets as an analog signal input pin.

Process		Description
Reading		Reads out the register value.
Writing	0	Uses an external pin not as analog input but digital input/output.
	1	Uses an external pin as analog input. (An I/O cell will be in a state of input direction, input cut-off, and pull-up disconnection.)

<Notes>

- This register sets analog input pins from AN31 to AN00.
- Each bit in the register sets each pin individually. There is a one-to-one correspondence between bit assignment and the order of pins. For example, the 31st bit of ADE sets AN31, the 14th bit of ADE sets AN14, and the 0th bit of ADE sets AN00. The port position of ANxx differs by each product.
  For correspondence, refer to the "Data Sheet" of the product used.
- For TYPE9 products, do not set "0" to 3rd bit of ADE.
- This register is not initialized by deep standby transition reset.

4.7. Extended Pin Function Setting Register (EPFRx)

The EPFRx register assigns functions to a pin if there is more than one function. EPFR11 does not exist in TYPE0 products. EPFR03 and EPFR12 to EPFR15 do not exist in TYPE0 and TYPE1 products. EPFR02, EPFR03, and EPFR10 to EPFR15 do not exist in TYPE3 products.

■ List of EPFRx Register Configuration

bit 31 0	Initial value	Attribute	Corresponding function
EPFR00	0x00030000	R/W	System function
EPFR01	0x00000000	R/W	Multi-function timer
EPFR02	0x00000000	R/W	
EPFR03	0x00000000	R/W	
EPFR04	0x00000000	R/W	Base timer
EPFR05	0x00000000	R/W	
EPFR06	0x00000000	R/W	External interrupt
EPFR07	0x00000000	R/W	Multi-function serial
EPFR08	0x00000000	R/W	
EPFR09	0x00000000	R/W	CAN/ADC trigger/QPRC
EPFR10	0x00000000	R/W	External bus
EPFR11	0x00000000	R/W	
EPFR12	0x00000000	R/W	Base timer
EPFR13	0x00000000	R/W	
EPFR14	0x00000000	R/W	QPRC/Ethernet / HDMI-CEC, Remote Control Reception
EPFR15	0x00000000	R/W	External interrupt
EPFR16	0x00000000	R/W	Multi function serial
EPFR17	0x00000000	R/W	
EPFR18	0x00000000	R/W	HDMI-CEC/Remote reception

EPFRx register is different depending on product TYPE.
For the correspondence between EPFRx register existence and product TYPE, SEE Tables 4-2 and 4-3.

<Notes>

- EPFRx register is not initialized by deep standby transition reset.

Table 4-2 EPFRx Register Product TYPE Correspondence Table (TYPE0 to TYPE5)

Product TYPE	TYPE0	TYPE1	TYPE2	TYPE3	TYPE4	TYPE5
EPFR00	○	○	○	○	○	○
EPFR01	○	○	○	○	○	○
EPFR02	○	○	○	-	○	○
EPFR03	-	-	○	-	○	○
EPFR04	○	○	○	○	○	○
EPFR05	○	○	○	○	○	○
EPFR06	○	○	○	○	○	○
EPFR07	○	○	○	○	○	○
EPFR08	○	○	○	○	○	○
EPFR09	○	○	○	○	○	○
EPFR10	○	○	○	-	○	○
EPFR11	-	○	○	-	○	○
EPFR12	-	-	○	-	-	-
EPFR13	-	-	○	-	-	-
EPFR14	-	-	○	-	○	-
EPFR15	-	-	○	-	-	-
EPFR16	-	-	-	-	-	-
EPFR17	-	-	-	-	-	-
EPFR18	-	-	-	-	-	-

Table 4-3 EPFRx Register Product TYPE Correspondence Table (TYPE6 to TYPE12)

Product TYPE	TYPE6	TYPE7	TYPE8	TYPE9	TYPE10	TYPE11	TYPE12
EPFR00	○	○	○	○	○	○	○
EPFR01	-	○	○	○	○	○	○
EPFR02	-	-	-	-	-	-	-
EPFR03	-	-	-	-	-	-	-
EPFR04	○	○	○	○	○	○	○
EPFR05	○	○	○	○	○	○	○
EPFR06	○	○	○	○	○	○	○
EPFR07	○	○	○	○	○	○	○
EPFR08	○	○	○	○	○	○	○
EPFR09	○	○	○	○	○	○	○
EPFR10	○	○	○	-	-	-	○
EPFR11	○	-	○	-	-	-	○
EPFR12	-	-	-	-	-	-	○
EPFR13	-	-	-	-	-	-	○
EPFR14	○	○	○	-	-	-	○
EPFR15	-	-	-	○	○	○	○
EPFR16	-	-	○	-	-	-	○
EPFR17	-	-	○	-	-	-	○
EPFR18	-	-	○	-	-	-	○

4.8. Extended Pin Function Setting Register 00 (EPFR00)

The EPFR00 register assigns functions to a pin if there is more than one function.

■ Register Configuration

bit	31	30	29	28	27	26	25	24
Field	Reserved						TRC1E	TRC0E
Attribute	-						R/W	R/W
Initial value							0	0

bit	23	22	21	20	19	18	17	16
Field	Reserved						JTAGEN1S	JTAGEN0B
Attribute	-						R/W	R/W
Initial value							1	1

bit	15	14	13	12	11	10	9	8
Field	Reserved		USBP1E	Reserved			USBP0E	Reserved
Attribute	-		R/W	-			R/W	-
Initial value	-		0	-			0	

bit	7	6	5	4	3	2	1	0
Field	SUBOUTE		RTCCOE		Reserved	CROUTE		NMIS
Attribute	R/W		R/W		-	R/W		R/W
Initial value	00		00			00		0

■ Register Function

[bit31:26] Reserved: Reserved bits

"0b000000" is read out from these bits.

When writing these bits, set them to "0b000000".

[bit25] TRC1E: TRACED Function Select bit 1

Selects a function for TRACED2 and TRACED3 pins.

Process		Description
Reading		Reads out the register value.
Writing	0	Does not use two pins of TRACED2 and TRACED3. [Initial value] (A shared pin is available)
	1	Uses two pins of TRACED2 and TRACED3.

[bit24] TRC0E: TRACED Function Select bit 0

Selects a function for TRACECLK, TRACED0, and TRACED1 pins.

Process		Description
Reading		Reads out the register value.
Writing	0	Does not use three pins of TRACECLK, TRACED0, and TRACED1. [Initial value] (A shared pin is available)
	1	Uses three pins of TRACECLK, TRACED0, and TRACED1.

[bit23:18] Reserved: Reserved bits

"0b000000" is read out from these bits.

When writing these bits, set them to "0b000000".

[bit17] JTAGEN1S: JTAG Function Select bit 1

Selects a function for TRSTX and TDI pins.

Process		Description
Reading		Reads out the register value.
Writing	0	Does not use two pins of TRSTX and TDI. (A shared pin is available.)
	1	Uses two pins of TRSTX and TDI. [Initial value]

[bit16] JTAGEN0B: JTAG Function Select bit 0

Selects a function for TCK, TMS, and TDO pins.

Process		Description
Reading		Reads out the register value.
Writing	0	Does not use three pins of TCK, TMS, and TDO. (A shared pin is available.)
	1	Uses three pins of TCK, TMS, and TDO. [Initial value]

[bit15:14] Reserved: Reserved bits

"0b00" is read out from these bits.

When writing these bits, set them to "0b00".

[bit13] USBP1E: USB ch.1 Function Select bit 1

Selects a function for USB ch.1.

Process		Description
Reading		Reads out the register value.
Writing	0	Does not produce output D+ resistor control signal (HCONTX) for USB ch.1. [Initial value] (A shared pin is available.)
	1	Produces output D+ resistor control signal (HCONTX) for USB ch.1.

[bit12:10] Reserved: Reserved bits

"0b000" is read out from these bits.

When writing these bits, set them to "0b000".

[bit9] USBP0E: USB ch.0 Function Select bit 1

Selects a function for USB ch.0.

Process		Description
Reading		Reads out the register value.
Writing	0	Does not produce output D+ resistor control signal (HCONTX) for USB ch.0. [Initial value] (A shared pin is available.)
	1	Produces output D+ resistor control signal (HCONTX) for USB ch.0.

[bit8] Reserved: Reserved bit

"0" is read out from this bit.

When writing this bit, set it to "0".

[bit7:6] SUBOUTE: Sub clock divide output function select bit

Selects sub clock divide output.

Process		Description
Reading		Reads out the register value.
Writing	00	Sub clock divide output is not executed. [initial value]
	01	SUBOUT_0 is used as the sub clock divide output pin.
	10	SUBOUT_1 is used as the sub clock divide output pin.
	11	SUBOUT_2 is used as the sub clock divide output pin.

[bit5:4] RTCCOE: RTC clock output select bit

Selects a RTC clock output.

Process		Description
Reading		Reads out the register value.
Writing	00	RTC clock output is not executed. [initial value]
	01	RTCCOE_0 is used as the RTC clock output pin.
	10	RTCCOE_1 is used as the RTC clock output pin.
	11	RTCCOE_2 is used as the RTC clock output pin.

[bit3] Reserved: Reserved bit

"0" is read out from this bit.

When writing this bit, set it to "0".

[bit2:1] CROUTE: Internal high-speed CR Oscillation Output Function Select bit

Selects internal high-speed CR oscillation output.

Process		Description
Reading		Reads out the register value.
Writing	00	Does not produce internal high-speed CR oscillation output. [Initial value]
	01	Uses CROUT_0 at the internal high-speed CR oscillation output pin.
	10	Uses CROUT_1 at the internal high-speed CR oscillation output pin.
	11	Uses CROUT_2 at the internal high-speed CR oscillation output pin.

[bit0] NMIS: NMIX Function Select bit

Selects a function for the NMIX pin.

Process		Description
Reading		Reads out the register value.
Writing	0	Does not use the NMIX pin. [Initial value]
	1	Uses the NMIX pin.

<Notes>

- This register is not initialized by deep standby transition reset.
- When the I/O port which is mapped to NMI input pin is changed to GPIO or other peripheral function from NMI (write EPFR00.NMIS = 1), input level of the I/O port should be held high level, and change the I/O port. Internal NMI signal is tied to high level in case of the I/O port is selected to GPIO or other peripheral function. Therefore, when input level of the I/O port is low, to change the I/O port from GPIO or other peripheral function to NMI, is caused to change of internal NMI signal high to low. So, falling edge will be detected, NMI request occurred.

4.9. Extended Pin Function Setting Register 01 (EPFR01)

The EPFR01 register assigns functions to a pin of the multifunction timer Unit0.
For Product TYPEs supporting this register, see Tables 4-2 and 4-3.

■ Register Configuration

bit	31	30	29	28	27	26	25	24
Field	IC03S			IC02S			IC01S	
Attribute	R/W			R/W			R/W	
Initial value	000			000			00	

bit	23	22	21	20	19	18	17	16
Field	IC01S	IC00S			FRCK0S		DTTI0S	
Attribute	R/W	R/W			R/W		R/W	
Initial value	0	000			00		00	

bit	15	14	13	12	11	10	9	8
Field	Reserved		IGTRG	DTTI0C	RTO05E		RTO04E	
Attribute	-		R/W	R/W	R/W		R/W	
Initial value	-		0	0	00		00	

bit	7	6	5	4	3	2	1	0
Field	RTO03E		RTO02E		RTO01E		RTO00E	
Attribute	R/W		R/W		R/W		R/W	
Initial value	00		00		00		00	

■ Register Function

[bit31:29] IC03S: IC03 Input Select bits

Selects input for IC03.

Process		Description
Reading		Reads out the register value.
Writing	000	Uses IC03_0 at the input pin of the input capture IC03. [Initial value]
	001	Same as Writing 000.
	010	Uses IC03_1 at the input pin of the input capture IC03.
	011	Uses IC03_2 at the input pin of the input capture IC03.
	100	Uses internal macro MFS ch.3 LSYN for input of the input capture IC03.
	101	Uses internal macro MFS ch.7 LSYN for input of the input capture IC03.
	110	Setting is prohibited.
	111	Uses the internal macro pin CRTRIM for input of the input capture IC03.

[bit28:26] IC02S: IC02 Input Select bits

Selects input for IC02.

Process		Description
Reading		Reads out the register value.
Writing	000	Uses IC02_0 at the input pin of the input capture IC02. [Initial value]
	001	Same as Writing 000.
	010	Uses IC02_1 at the input pin of the input capture IC02.
	011	Uses IC02_2 at the input pin of the input capture IC02.
	100	Uses internal macro MFS ch.2 LSYN for input of the input capture IC02.
	101	Uses internal macro MFS ch.6 LSYN for input of the input capture IC02.
	110	Setting is prohibited.
	111	Setting is prohibited.

[bit25:23] IC01S: IC01 Input Select bits

Selects input for IC01.

Process		Description
Reading		Reads out the register value.
Writing	000	Uses IC01_0 at the input pin of the input capture IC01. [Initial value]
	001	Same as Writing 000.
	010	Uses IC01_1 at the input pin of the input capture IC01.
	011	Uses IC01_2 at the input pin of the input capture IC01.
	100	Uses internal macro MFS ch.1 LSYN for input of the input capture IC01.
	101	Uses internal macro MFS ch.5 LSYN for input of the input capture IC01.
	110	Setting is prohibited.
	111	Setting is prohibited.

[bit22:20] IC00S: IC00 Input Select bits

Selects input for IC00.

Process		Description
Reading		Reads out the register value.
Writing	000	Uses IC00_0 at the input pin of the input capture IC00. [Initial value]
	001	Same as Writing 000.
	010	Uses IC00_1 at the input pin of the input capture IC00.
	011	Uses IC00_2 at the input pin of the input capture IC00.
	100	Uses internal macro MFS ch.0 LSYN for input of the input capture IC00.
	101	Uses internal macro MFS ch.4 LSYN for input of the input capture IC00.
	110	Setting is prohibited.
	111	Setting is prohibited.

[bit19:18] FRCK0S: FRCK0 Input Select bits

Selects input for FRCK0.

Process		Description
Reading		Reads out the register value.
Writing	00	Uses FRCK0_0 at the input pin of the free-run timer FRCK0. [Initial value]
	01	Same as Writing 00.
	10	Uses FRCK0_1 at the input pin of the free-run timer FRCK0.
	11	Uses FRCK0_2 at the input pin of the free-run timer FRCK0.

[bit17:16] DTTI0S: DTTI0X Input Select bits

Selects input for DTTI0X.

Process		Description
Reading		Reads out the register value.
Writing	00	Uses DTTI0X_0 at the input pin of the waveform generator DTTI0X. [Initial value]
	01	Same as Writing 00.
	10	Uses DTTI0X_1 at the input pin of the waveform generator DTTI0X.
	11	Uses DTTI0X_2 at the input pin of the waveform generator DTTI0X.

[bit15:14] Reserved: Reserved bits

"0b00" is read out from these bits.

When writing these bits, set them to "0b00".

[bit13] IGTRG: IGTRG Input Select bit

Selects input for IGTRG.

Process		Description
Reading		Reads out the register value.
Writing	0	Uses IGTRG_0 at the input pin for IGTRG input of PPG. [Initial value]
	1	Uses IGTRG_1 at the input pin for IGTRG input of PPG.

[bit12] DTTI0C: DTTI0X Function Select bit

Selects a function for DTTI0X.

Process		Description
Reading		Reads out the register value.
Writing	0	Does not switch GPIO by DTTIF0 for output of pins RTO00 to RTO05. [Initial value]
	1	Switches GPIO by DTTIF0 for output of pins RTO00 to RTO05.

[bit11:10] RTO05E: RTO05 Output Select bits

Selects output for RTO05.

Process		Description
Reading		Reads out the register value.
Writing	00	Does not produce output for the waveform generator RTO05. [Initial value]
	01	Uses RTO05_0 at the output pin of the waveform generator RTO05.
	10	Uses RTO05_1 at the output pin of the waveform generator RTO05.
	11	Setting is prohibited.

[bit9:8] RTO04E: RTO04 Output Select bits

Selects output for RTO04.

Process		Description
Reading		Reads out the register value.
Writing	00	Does not produce output for the waveform generator RTO04. [Initial value]
	01	Uses RTO04_0 at the output pin of the waveform generator RTO04.
	10	Uses RTO04_1 at the output pin of the waveform generator RTO04.
	11	Setting is prohibited.

[bit7:6] RTO03E: RTO03 Output Select bits

Selects output for RTO03.

Process		Description
Reading		Reads out the register value.
Writing	00	Does not produce output for the waveform generator RTO03. [Initial value]
	01	Uses RTO03_0 at the output pin of the waveform generator RTO03.
	10	Uses RTO03_1 at the output pin of the waveform generator RTO03.
	11	Setting is prohibited.

[bit5:4] RTO02E: RTO02 Output Select bits

Selects output for RTO02.

Process		Description
Reading		Reads out the register value.
Writing	00	Does not produce output for the waveform generator RTO02. [Initial value]
	01	Uses RTO02_0 at the output pin of the waveform generator RTO02.
	10	Uses RTO02_1 at the output pin of the waveform generator RTO02.
	11	Setting is prohibited.

[bit3:2] RTO01E: RTO01 Output Select bits

Selects output for RTO01.

Process		Description
Reading		Reads out the register value.
Writing	00	Does not produce output for the waveform generator RTO01. [Initial value]
	01	Uses RTO01_0 at the output pin of the waveform generator RTO01.
	10	Uses RTO01_1 at the output pin of the waveform generator RTO01.
	11	Setting is prohibited.

[bit1:0] RTO00E: RTO00 Output Select bits

Selects output for RTO00.

Process		Description
Reading		Reads out the register value.
Writing	00	Does not produce output for the waveform generator RTO00. [Initial value]
	01	Uses RTO00_0 at the output pin of the waveform generator RTO00.
	10	Uses RTO00_1 at the output pin of the waveform generator RTO00.
	11	Setting is prohibited.

<Note>

This register is not initialized by deep standby transition reset.

4.10. Extended Pin Function Setting Register 02 (EPFR02)

The EPFR02 register assigns functions to a pin of the multifunction timer Unit1.
For Product TYPEs supporting this register, see Tables 4-2 and 4-3.

■ Register Configuration

bit	31	30	29	28	27	26	25	24
Field	IC13S			IC12S			IC11S	
Attribute		R/W			R/W			R/W
Initial value		000			000			00

bit	23	22	21	20	19	18	17	16
Field	IC11S	IC10S			FRCK1S		DTTI1S	
Attribute	R/W		R/W			R/W		R/W
Initial value	0		000			00		00

bit	15	14	13	12	11	10	9	8
Field	Reserved			DTTI1C	RTO15E		RTO14E	
Attribute		-		R/W		R/W		R/W
Initial value		-		0		00		00

bit	7	6	5	4	3	2	1	0
Field	RTO13E		RTO12E		RTO11E		RTO10E	
Attribute		R/W		R/W		R/W		R/W
Initial value		00		00		00		00

■ Register Function

[bit31:29] IC13S: IC13 Input Select bits

Selects input for IC13.

Process		Description
Reading		Reads out the register value.
Writing	000	Uses IC13_0 at the input pin of the input capture IC13. [Initial value]
	001	Same as Writing 000.
	010	Uses IC13_1 at the input pin of the input capture IC13.
	011	Setting is prohibited.
	100	Uses internal macro MFS ch.3 LSYN for input of the input capture IC13.
	101	Uses internal macro MFS ch.7 LSYN for input of the input capture IC13.
	110	Setting is prohibited.
	111	Setting is prohibited.

[bit28:26] IC12S: IC12 Input Select bits

Selects input for IC12.

Process		Description
Reading		Reads out the register value.
Writing	000	Uses IC12_0 at the input pin of the input capture IC12. [Initial value]
	001	Same as Writing 000.
	010	Uses IC12_1 at the input pin of the input capture IC12.
	011	Setting is prohibited.
	100	Uses internal macro MFS ch.2 LSYN for input of the input capture IC12.
	101	Uses internal macro MFS ch.6 LSYN for input of the input capture IC12.
	110	Setting is prohibited.
	111	Setting is prohibited.

[bit25:23] IC11S: IC11 Input Select bits

Selects input for IC11.

Process		Description
Reading		Reads out the register value.
Writing	000	Uses IC11_0 at the input pin of the input capture IC11. [Initial value]
	001	Same as Writing 000.
	010	Uses IC11_1 at the input pin of the input capture IC11.
	011	Setting is prohibited.
	100	Uses internal macro MFS ch.1 LSYN for input of the input capture IC11.
	101	Uses internal macro MFS ch.5 LSYN for input of the input capture IC11.
	110	Setting is prohibited.
	111	Setting is prohibited.

[bit22:20] IC10S: IC10 Input Select bits

Selects input for IC10.

Process		Description
Reading		Reads out the register value.
Writing	000	Uses IC10_0 at the input pin of the input capture IC10. [Initial value]
	001	Same as Writing 000.
	010	Uses IC10_1 at the input pin of the input capture IC10.
	011	Setting is prohibited.
	100	Uses internal macro MFS ch.0 LSYN for input of the input capture IC10.
	101	Uses internal macro MFS ch.4 LSYN for input of the input capture IC10.
	110	Setting is prohibited.
	111	Setting is prohibited.

[bit19:18] FRCK1S: FRCK1 Input Select bits

Selects input for FRCK1.

Process		Description
Reading		Reads out the register value.
Writing	00	Uses FRCK1_0 at the input pin of the free-run timer FRCK1. [Initial value]
	01	Same as Writing 00.
	10	Uses FRCK1_1 at the input pin of the free-run timer FRCK1.
	11	Setting is prohibited.

[bit17:16] DTTI1S: DTTI1X Input Select bits

Select input for DTTI1X.

Process		Description
Reading		Reads out the register value.
Writing	00	Uses DTTI1X_0 at the input pin of the waveform generator DTTI1X. [Initial value]
	01	Same as Writing 00.
	10	Uses DTTI1X_1 at the input pin of the waveform generator DTTI1X.
	11	Setting is prohibited.

[bit15:13] Reserved: Reserved bits

"0b000" is read out from these bits.

When writing these bits, set them to "0b000".

[bit12] DTTI1C: DTTI1X Function Select bit

Selects a function for DTTI1X.

Process		Description
Reading		Reads out the register value.
Writing	0	Does not switch GPIO by DTTIF1 for output of pins RTO10 to RTO15. [Initial value]
	1	Switches GPIO by DTTIF1 for output of pins RTO10 to RTO15.

[bit11:10] RTO15E: RTO15 Output Select bits

Selects output for RTO15.

Process		Description
Reading		Reads out the register value.
Writing	00	Does not produce output for the waveform generator RTO15. [Initial value]
	01	Uses RTO15_0 at the output pin of the waveform generator RTO15.
	10	Uses RTO15_1 at the output pin of the waveform generator RTO15.
	11	Setting is prohibited.

[bit9:8] RTO14E: RTO14 Output Select bits

Selects output for RTO14.

Process		Description
Reading		Reads out the register value.
Writing	00	Does not produce output for the waveform generator RTO14. [Initial value]
	01	Uses RTO14_0 at the output pin of the waveform generator RTO14.
	10	Uses RTO14_1 at the output pin of the waveform generator RTO14.
	11	Setting is prohibited.

[bit7:6] RTO13E: RTO13 Output Select bits

Selects output for RTO13.

Process		Description
Reading		Reads out the register value.
Writing	00	Does not produce output for the waveform generator RTO13. [Initial value]
	01	Uses RTO13_0 at the output pin of the waveform generator RTO13.
	10	Uses RTO13_1 at the output pin of the waveform generator RTO13.
	11	Setting is prohibited.

[bit5:4] RTO12E: RTO12 Output Select bits

Selects output for RTO12.

Process		Description
Reading		Reads out the register value.
Writing	00	Does not produce output for the waveform generator RTO12. [Initial value]
	01	Uses RTO12_0 at the output pin of the waveform generator RTO12.
	10	Uses RTO12_1 at the output pin of the waveform generator RTO12.
	11	Setting is prohibited.

[bit3:2] RTO11E: RTO11 Output Select bits

Selects output for RTO11.

Process		Description
Reading		Reads out the register value.
Writing	00	Does not produce output for the waveform generator RTO11. [Initial value]
	01	Uses RTO11_0 at the output pin of the waveform generator RTO11.
	10	Uses RTO11_1 at the output pin of the waveform generator RTO11.
	11	Setting is prohibited.

[bit1:0] RTO10E: RTO10 Output Select bits

Selects output for RTO10.

Process		Description
Reading		Reads out the register value.
Writing	00	Does not produce output for the waveform generator RTO10. [Initial value]
	01	Uses RTO10_0 at the output pin of the waveform generator RTO10.
	10	Uses RTO10_1 at the output pin of the waveform generator RTO10.
	11	Setting is prohibited.

<Notes>

- This register is not available for TYPE3 product.
- This register is not initialized by deep standby transition reset.

4.11. Extension Function Pin Setting Register 03 (EPFR03)

EPFR03 register sets the function assignment to the multi-function timer Unit2 pin.
For Product TYPEs supporting this register, see Tables 4-2 and 4-3.

■ Register Configuration

bit	31	30	29	28	27	26	25	24
Field	IC23S			IC22S			IC21S	
Attribute		R/W			R/W			R/W
Initial value		000			000			00

bit	23	22	21	20	19	18	17	16
Field	IC21S	IC20S			FRCK2S		DTTI2S	
Attribute	R/W		R/W			R/W		R/W
Initial value	0		000			00		00

bit	15	14	13	12	11	10	9	8
Field	Reserved			DTTI2C	RTO25E		RTO24E	
Attribute		-		R/W		R/W		R/W
Initial value		-		0		00		00

bit	7	6	5	4	3	2	1	0
Field	RTO23E		RTO22E		RTO21E		RTO20E	
Attribute		R/W		R/W		R/W		R/W
Initial value		00		00		00		00

■ Register Function

[bit31:29] IC23S: IC23 input select bits

Selects IC23 input.

Process		Description
Reading		Reads out the register value.
Writing	000	Use IC23_0 as the input pin of input capture IC23. [initial value]
	001	Same as when writing "000"
	010	Use IC23_1 as the input pin of input capture IC23.
	011	Setting is prohibited.
	100	Use internal macro MFS ch.3 LSYN as input of input capture IC23.
	101	Use internal macro MFS ch.7 LSYN as input of input capture IC23.
	110	Setting is prohibited.
	111	Setting is prohibited.

[bit28:26] IC22S: IC22 input select bits

Selects IC22 input.

Process		Description
Reading		Reads out the register value.
Writing	000	Use IC22_0 as the input pin of input capture IC22. [initial value]
	001	Same as when writing "000"
	010	Use IC22_1 as the input pin of input capture IC22.
	011	Setting is prohibited.
	100	Use internal macro MFS ch.2 LSYN as input of input capture IC22.
	101	Use internal macro MFS ch.6 LSYN as input of input capture IC22.
	110	Setting is prohibited.
	111	Setting is prohibited.

[bit25:23] IC21S: IC21 input select bits

Selects IC21 input.

Process		Description
Reading		Reads out the register value.
Writing	000	Use IC21_0 as the input pin of input capture IC21. [initial value]
	001	Same as when writing "000"
	010	Use IC21_1 as the input pin of input capture IC21.
	011	Setting is prohibited.
	100	Use internal macro MFS ch.1 LSYN as input of input capture IC21.
	101	Use internal macro MFS ch.5 LSYN as input of input capture IC21.
	110	Setting is prohibited.
	111	Setting is prohibited.

[bit22:20] IC20S: IC20 input select bits

Selects IC20 input.

Process		Description
Reading		Reads out the register value.
Writing	000	Use IC20_0 as the input pin of input capture IC20. [initial value]
	001	Same as when writing "000"
	010	Use IC20_1 as the input pin of input capture IC20.
	011	Setting is prohibited.
	100	Use internal macro MFS ch.0 LSYN as input of input capture IC20.
	101	Use internal macro MFS ch.4 LSYN as input of input capture IC20.
	110	Setting is prohibited.
	111	Setting is prohibited.

[bit19:18] FRCK2S: FRCK2 Input Select bits

Selects input for FRCK2.

Process		Description
Reading		Reads out the register value.
Writing	00	Use FRCK2_0 as the input pin of free-run timer FRCK2. [Initial value]
	01	Same as Writing 00.
	10	Use FRCK2_1 a as the input pin of free-run timer FRCK2.
	11	Setting is prohibited.

[bit17:16] DTTI2S: DTTI2X Input Select bits

Selects input for DTTI2X.

Process		Description
Reading		Reads out the register value.
Writing	00	Use DTTI2X_0 as the input pin of waveform generator DTTI2X. [Initial value]
	01	Same as Writing 00.
	10	Use DTTI2X_1 as the input pin of waveform generator DTTI2X.
	11	Setting is prohibited.

[bit15:13] Reserved: Reserved bits

"0b000" is read from these bits.

When writing, set them to "0b000".

[bit12] DTTI2C: DTTI2X Function Select bit

Selects the function of DTTI2X.

Process		Description
Reading		Reads out the register value.
Writing	0	Does not switch GPIO by DTTIF2 for outputs of the pins from RTO20 to RTO25. [Initial value]
	1	Switches GPIO by DTTIF2 for outputs of the pins from RTO20 to RTO25.

[bit11:10] RTO25E: RTO25 Output Select bits

Selects the output of RTO25.

Process		Description
Reading		Reads out the register value.
Writing	00	Does not output waveform generator RTO25. [Initial value]
	01	Use RTO25_0 as the output pin of waveform generator RTO25.
	10	Use RTO25_1 as the output pin of waveform generator RTO25.
	11	Setting is prohibited.

[bit9:8] RTO24E: RTO24 Output Select bits

Selects output for RTO24.

Process		Description
Reading		Reads out the register value.
Writing	00	Does not output waveform generator RTO24. [Initial value]
	01	Use RTO24_0 as the output pin of waveform generator RTO24.
	10	Use RTO24_1 as the output pin of waveform generator RTO24.
	11	Setting is prohibited.

[bit7:6] RTO23E: RTO23 Output Select bits

Selects output for RTO23.

Process		Description
Reading		Reads out the register value.
Writing	00	Does not output waveform generator RTO23. [Initial value]
	01	Use RTO23_0 as the output pin of waveform generator RTO23.
	10	Use RTO23_1 as the output pin of waveform generator RTO23.
	11	Setting is prohibited.

[bit5:4] RTO22E: RTO22 Output Select bits

Selects output for RTO22.

Process		Description
Reading		Reads out the register value.
Writing	00	Does not output waveform generator RTO22. [Initial value]
	01	Use RTO22_0 as the output pin of waveform generator RTO22.
	10	Use RTO22_1 as the output pin of waveform generator RTO22.
	11	Setting is prohibited.

[bit3:2] RTO21E: RTO21 Output Select bits

Selects output for RTO21.

Process		Description
Reading		Reads out the register value.
Writing	00	Does not output waveform generator RTO21. [Initial value]
	01	Use RTO21_0 as the output pin of waveform generator RTO21.
	10	Use RTO21_1 as the output pin of waveform generator RTO21.
	11	Setting is prohibited.

[bit1:0] RTO20E: RTO20 Output Select bits

Selects output for RTO20.

Process		Description
Reading		Reads out the register value.
Writing	00	Does not output waveform generator RTO20. [Initial value]
	01	Use RTO20_0 as the output pin of waveform generator RTO20.
	10	Use RTO20_1 as the output pin of waveform generator RTO20.
	11	Setting is prohibited.

<Notes>

- This register exists in products other than TYPE0, TYPE1, and TYPE3.
- This register is not initialized by deep standby transition reset.

4.12. Extended Pin Function Setting Register 04 (EPFR04)

The EPFR04 register assigns functions to pins of ch.0, ch.1, ch.2, and ch.3 of the base timer.

■ Register Configuration

bit	31	30	29	28	27	26	25	24
Field	Reserved		TIOB3S		TIOA3E		TIOA3S	
Attribute	-		R/W		R/W		R/W	
Initial value	-		00		00		00	

bit	23	22	21	20	19	18	17	16
Field	Reserved		TIOB2S		TIOA2E		Reserved	
Attribute	-		R/W		R/W		-	
Initial value	-		00		00		-	

bit	15	14	13	12	11	10	9	8
Field	Reserved		TIOB1S		TIOA1E		TIOA1S	
Attribute	-		R/W		R/W		R/W	
Initial value	-		00		00		00	

bit	7	6	5	4	3	2	1	0
Field	Reserved	TIOB0S			TIOA0E		Reserved	
Attribute	-	R/W			R/W		-	
Initial value	-	000			00		-	

■ Register Function

[bit31:30] Reserved: Reserved bits

"0b00" is read out from these bits.

When writing these bits, set them to "0b00".

[bit29:28] TIOB3S: TIOB3 Input Select bits

Selects input for TIOB3.

Process		Description
Reading		Reads out the register value.
Writing	00	Uses TIOB3_0 at the input pin of BT ch.3 TIOB. [Initial value]
	01	Same as Writing 00.
	10	Uses TIOB3_1 at the input pin of BT ch.3 TIOB.
	11	Uses TIOB3_2 at the input pin of BT ch.3 TIOB.

[bit27:26] TIOA3E: TIOA3 Output Select bits

Selects output for TIOA3.

Process		Description
Reading		Reads out the register value.
Writing	00	Does not produce output for BT ch.3 TIOA. [Initial value]
	01	Uses TIOA3_0 at the output pin of BT ch.3 TIOA.
	10	Uses TIOA3_1 at the output pin of BT ch.3 TIOA.
	11	Uses TIOA3_2 at the output pin of BT ch.3 TIOA.

[bit25:24] TIOA3S: TIOA3 Input Select bits

Selects input for TIOA3.

Process		Description
Reading		Reads out the register value.
Writing	00	Uses TIOA3_0 at the input pin of BT ch.3 TIOA. [Initial value]
	01	Same as Writing 00.
	10	Uses TIOA3_1 at the input pin of BT ch.3 TIOA.
	11	Uses TIOA3_2 at the input pin of BT ch.3 TIOA.

[bit23:22] Reserved: Reserved bits

"0b00" is read out from these bits.

When writing these bits, set them to "0b00".

[bit21:20] TIOB2S: TIOB2 Input Select bits

Selects input for TIOB2.

Process		Description
Reading		Reads out the register value.
Writing	00	Uses TIOB2_0 at the input pin of BT ch.2 TIOB. [Initial value]
	01	Same as Writing 00.
	10	Uses TIOB2_1 at the input pin of BT ch.2 TIOB.
	11	Uses TIOB2_2 at the input pin of BT ch.2 TIOB.

[bit19:18] TIOA2E: TIOA2 Output Select bits

Selects output for TIOA2.

Process		Description
Reading		Reads out the register value.
Writing	00	Does not produce output for BT ch.2 TIOA. [Initial value]
	01	Uses TIOA2_0 at the output pin of BT ch.2 TIOA.
	10	Uses TIOA2_1 at the output pin of BT ch.2 TIOA.
	11	Uses TIOA2_2 at the output pin of BT ch.2 TIOA.

[bit17:14] Reserved: Reserved bits

"0b0000" is read out from these bits.

When writing these bits, set them to "0b0000".

[bit13:12] TIOB1S: TIOB1 Input Select bits

Selects input for TIOB1.

Process		Description
Reading		Reads out the register value.
Writing	00	Uses TIOB1_0 at the input pin of BT ch.1 TIOB. [Initial value]
	01	Same as Writing 00.
	10	Uses TIOB1_1 at the input pin of BT ch.1 TIOB.
	11	Uses TIOB1_2 at the input pin of BT ch.1 TIOB.

[bit11:10] TIOA1E: TIOA1 Output Select bits

Selects output for TIOA1.

Process		Description
Reading		Reads out the register value.
Writing	00	Does not produce output for BT ch.1 TIOA. [Initial value]
	01	Uses TIOA1_0 at the output pin of BT ch.1 TIOA.
	10	Uses TIOA1_1 at the output pin of BT ch.1 TIOA.
	11	Uses TIOA1_2 at the output pin of BT ch.1 TIOA.

[bit9:8] TIOA1S: TIOA1 Input Select bits

Selects input for TIOA1.

Process		Description
Reading		Reads out the register value.
Writing	00	Uses TIOA1_0 at the input pin of BT ch.1 TIOA. [Initial value]
	01	Same as Writing 00.
	10	Uses TIOA1_1 at the input pin of BT ch.1 TIOA.
	11	Uses TIOA1_2 at the input pin of BT ch.1 TIOA.

[bit7] Reserved: Reserved bit

"0b0" is read out from this bit.

When writing this bit, set it to "0b0".

[bit6:4] TIOB0S: TIOB0 Input Select bits

Selects input for TIOB0.

Process		Description
Reading		Reads out the register value.
Writing	000	Uses TIOB0_0 at the input pin of BT ch.0 TIOB. [Initial value]
	001	Same as Writing 000.
	010	Uses TIOB0_1 at the input pin of BT ch.0 TIOB.
	011	Uses TIOB0_2 at the input pin of BT ch.0 TIOB.
	100	Setting is prohibited.
	101	Setting is prohibited.
	110	Uses SUBOUT at the input pin of BT ch.0 TIOB.*2
	111	Uses at the pin for measuring trimming of the high-speed CR frequency division clock.*1

*1: The above description of "Writing 111" is applicable only to TYPE3 and TYPE6 products or later. For TYPE0, TYPE1, TYPE2, TYPE4, and TYPE5 products, the setting is prohibited.

*2: The above description of "Writing 110" is applicable only to TYPE7 products or later. For TYPE0 to TYPE6 products, setting are prohibited.

[bit3:2] TIOA0E: TIOA0 Output Select bits

Selects output for TIOA0.

Process		Description
Reading		Reads out the register value.
Writing	00	Produces output for BT ch.0 TIOA. [Initial value]
	01	Uses TIOA0_0 at the output pin of BT ch.0 TIOA.
	10	Uses TIOA0_1 at the output pin of BT ch.0 TIOA.
	11	Uses TIOA0_2 at the output pin of BT ch.0 TIOA.

[bit1:0] Reserved: Reserved bits
"0b00" is read out from these bits.
When writing these bits, set them to "0b00".

<Notes>

- TIOA
  Even channels are for output only.
  Odd channels are for both input and output.
- TIOB
  Input only.
- TIOA1, TIOA3, TIOA5, TIOA7(odd number of "A") are not bidirectional pins so that choose either input pin or output pin for them.
  When output is chosen for odd TIOA channel, input setting will be ignored.

  Example1: Use TIOA1 as an output pin:
  When TIOA1 is output to TIOA1_0, select EPFR04:TIOA1E = 01.
  When TIOA1 is output to TIOA1_1, select EPFR04:TIOA1E = 10.
  When TIOA1 is output to TIOA1_2, select EPFR04:TIOA1E = 11.
  Settings for EPFR04:TIOA1S will be ignored.
  Select ADE=0, PFR=1 for selected pins (DDR will be ignored).
  All the output of other peripheral function pins which are also used by selected pins must be OFF.

  Example2: When TIOA1 is used as an input pin:
  Select EPFR04:TIOA1E = 00.
  When TIOA1 is input from TIOA1_0, select EPFR04:TIOA1S = 00 or 01.
  When TIOA1 is input from TIOA1_1, select EPFR04:TIOA1S = 10.
  When TIOA1 is input from TIOA1_2, select EPFR04:TIOA1S = 11.
  Select ADE=0, PFR=1 for selected pins (DDR will be ignored).
  All the output of other peripheral function pins which are also used by selected pins must be OFF.

  * When a pin is set to input, the output of the pin which is also used by selected pins (GPIO, other peripheral function pins) can be input to the base timer as Feedback with a setting not described above.

  This register is not initialized by deep standby transition reset.

4.13. Extended Pin Function Setting Register 05 (EPFR05)

The EPFR05 register assigns functions to pins of ch.4, ch.5, ch.6, and ch.7 of the base timer.

■ Register Configuration

bit	31	30	29	28	27	26	25	24
Field	Reserved		TIOB7S		TIOA7E		TIOA7S	
Attribute	-		R/W		R/W		R/W	
Initial value	-		00		00		00	

bit	23	22	21	20	19	18	17	16
Field	Reserved		TIOB6S		TIOA6E		Reserved	
Attribute	-		R/W		R/W		-	
Initial value	-		00		00		-	

bit	15	14	13	12	11	10	9	8
Field	Reserved		TIOB5S		TIOA5E		TIOA5S	
Attribute	-		R/W		R/W		R/W	
Initial value	-		00		00		00	

bit	7	6	5	4	3	2	1	0
Field	Reserved		TIOB4S		TIOA4E		Reserved	
Attribute	-		R/W		R/W		-	
Initial value	-		00		00		-	

■ Register Function

[bit31:30] Reserved: Reserved bits

"0b00" is read out from these bits.
When writing these bits, set them to "0b00".

[bit29:28] TIOB7S: TIOB7 Input Select bits

Selects input for TIOB7.

Process		Description
Reading		Reads out the register value.
Writing	00	Uses TIOB7_0 at the input pin of BT ch.7 TIOB. [Initial value]
	01	Same as Writing 00.
	10	Uses TIOB7_1 at the input pin of BT ch.7 TIOB.
	11	Uses TIOB7_2 at the input pin of BT ch.7 TIOB.

[bit27:26] TIOA7E: TIOA7 Output Select bits

Selects output for TIOA7.

Process		Description
Reading		Reads out the register value.
Writing	00	Does not produce the output of the BT ch.7 TIOA. [Initial value]
	01	Uses TIOA7_0 at the output pin of BT ch.7 TIOA.
	10	Uses TIOA7_1 at the output pin of BT ch.7 TIOA.
	11	Uses TIOA7_2 at the output pin of BT ch.7 TIOA.

[bit25:24] TIOA7S: TIOA7 Input Select bits

Selects input for TIOA7.

Process		Description
Reading		Reads out the register value.
Writing	00	Uses TIOA7_0 at the input pin of BT ch.7 TIOA. [Initial value]
	01	Same as Writing 00.
	10	Uses TIOA7_1 at the input pin of BT ch.7 TIOA.
	11	Uses TIOA7_2 at the input pin of BT ch.7 TIOA.

[bit23:22] Reserved: Reserved bits

"0b00" is read out from these bits.

When writing these bits, set them to "0b00".

[bit21:20] TIOB6S: TIOB6 Input Select bits

Selects input for TIOB6.

Process		Description
Reading		Reads out the register value.
Writing	00	Uses TIOB6_0 at the input pin of BT ch.6 TIOB. [Initial value]
	01	Same as Writing 00.
	10	Uses TIOB6_1 at the input pin of BT ch.6 TIOB.
	11	Uses TIOB6_2 at the input pin of BT ch.6 TIOB.

[bit19:18] TIOA6E: TIOA6 Output Select bits

Selects output for TIOA6.

Process		Description
Reading		Reads out the register value.
Writing	00	Does not produce the output of the BT ch.6 TIOA. [Initial value]
	01	Uses TIOA6_0 at the output pin of BT ch.6 TIOA.
	10	Uses TIOA6_1 at the output pin of BT ch.6 TIOA.
	11	Uses TIOA6_2 at the output pin of BT ch.6 TIOA.

[bit17:14] Reserved: Reserved bits

"0b0000" is read out from these bits.

When writing these bits, set them to "0b0000".

[bit13:12] TIOB5S: TIOB5 Input Select bits

Selects input for TIOB5.

Process		Description
Reading		Reads out the register value.
Writing	00	Uses TIOB5_0 at the input pin of BT ch.5 TIOB. [Initial value]
	01	Same as Writing 00.
	10	Uses TIOB5_1 at the input pin of BT ch.5 TIOB.
	11	Uses TIOB5_2 at the input pin of BT ch.5 TIOB.

[bit11:10] TIOA5E: TIOA5 Output Select bits

Selects output for TIOA5.

Process		Description
Reading		Reads out the register value.
Writing	00	Does not produce the output of the BT ch.5 TIOA. [Initial value]
	01	Uses TIOA5_0 at the output pin of BT ch.5 TIOA.
	10	Uses TIOA5_1 at the output pin of BT ch.5 TIOA.
	11	Uses TIOA5_2 at the output pin of BT ch.5 TIOA.

[bit9:8] TIOA5S: TIOA5 Input Select bits

Selects input for TIOA5.

Process		Description
Reading		Reads out the register value.
Writing	00	Uses TIOA5_0 at the input pin of BT ch.5 TIOA. [Initial value]
	01	Same as Writing 00.
	10	Uses TIOA5_1 at the input pin of BT ch.5 TIOA.
	11	Uses TIOA5_2 at the input pin of BT ch.5 TIOA.

[bit7:6] Reserved: Reserved bits

"0b00" is read out from these bits.

When writing these bits, set them to "0b00".

[bit5:4] TIOB4S: TIOB4 Input Select bits

Selects input for TIOB4.

Process		Description
Reading		Reads out the register value.
Writing	00	Uses TIOB4_0 at the input pin of BT ch.4 TIOB. [Initial value]
	01	Same as Writing 00.
	10	Uses TIOB4_1 at the input pin of BT ch.4 TIOB.
	11	Uses TIOB4_2 at the input pin of BT ch.4 TIOB.

[bit3:2] TIOA4E: TIOA4 Output Select bits

Selects output for TIOA4.

Process		Description
Reading		Reads out the register value.
Writing	00	Does not produce the output of the BT ch.4 TIOA. [Initial value]
	01	Uses TIOA4_0 at the output pin of BT ch.4 TIOA.
	10	Uses TIOA4_1 at the output pin of BT ch.4 TIOA.
	11	Uses TIOA4_2 at the output pin of BT ch.4 TIOA.

[bit1:0] Reserved: Reserved bits

"0b00" is read out from these bits.

When writing these bits, set them to "0b00".

<Notes>

- TIOA
  Even channels are for output only.
  Odd channels are for both input and output.
- TIOB
  Input only.
- TIOA1, TIOA3, TIOA5, TIOA7(odd number of "A") are not bidirectional pins so that choose either input pin or output pin for them.
  When output is chosen for odd TIOA channel, input setting will be ignored.

Example1: Use TIOA1 as an output pin:
When TIOA1 is output to TIOA1_0, select EPFR04:TIOA1E = 01.
When TIOA1 is output to TIOA1_1, select EPFR04:TIOA1E = 10.
When TIOA1 is output to TIOA1_2, select EPFR04:TIOA1E = 11.
Settings for EPFR04:TIOA1S will be ignored.
Select ADE=0, PFR=1 for selected pins (DDR will be ignored).
All the output of other peripheral function pins which are also used by selected pins must be OFF.

Example2: When TIOA1 is used as an input pin:
Select EPFR04:TIOA1E = 00.
When TIOA1 is input from TIOA1_0, select EPFR04:TIOA1S = 00 or 01.
When TIOA1 is input from TIOA1_1, select EPFR04:TIOA1S = 10.
When TIOA1 is input from TIOA1_2, select EPFR04:TIOA1S = 11.
Select ADE=0, PFR=1 for selected pins (DDR will be ignored).
All the output of other peripheral function pins which are also used by selected pins must be OFF.

* When a pin is set to input, the output of the pin which is also used by selected pins (GPIO, other peripheral function pins) can be input to the base timer as Feedback with a setting not described above.

This register is not initialized by deep standby transition reset.

4.14. Extended Pin Function Setting Register 06 (EPFR06)

The EPFR06 register assigns functions to external interrupt pins.

■ Register Configuration

bit	31 30	29 28	27 26	25 24
Field	EINT15S	EINT14S	EINT13S	EINT12S
Attribute	R/W	R/W	R/W	R/W
Initial value	00	00	00	00

bit	23 22	21 20	19 18	17 16
Field	EINT11S	EINT10S	EINT09S	EINT08S
Attribute	R/W	R/W	R/W	R/W
Initial value	00	00	00	00

bit	15 14	13 12	11 10	9 8
Field	EINT07S	EINT06S	EINT05S	EINT04S
Attribute	R/W	R/W	R/W	R/W
Initial value	00	00	00	00

bit	7 6	5 4	3 2	1 0
Field	EINT03S	EINT02S	EINT01S	EINT00S
Attribute	R/W	R/W	R/W	R/W
Initial value	00	00	00	00

■ Register Function

[bit31:30] EINT15S: External Interrupt Input Select bits

Selects input for EINT15.

Process		Description
Reading		Reads out the register value.
Writing	00	Uses INT15_0 at the input pin of EINT ch.15. [Initial value]
	01	Same as Writing 00.
	10	Uses INT15_1 at the input pin of EINT ch.15.
	11	Uses INT15_2 at the input pin of EINT ch.15.

[bit29:28] EINT14S: External Interrupt Input Select bits

Selects input for EINT14.

Process		Description
Reading		Reads out the register value.
Writing	00	Uses INT14_0 at the input pin of EINT ch.14. [Initial value]
	01	Same as Writing 00.
	10	Uses INT14_1 at the input pin of EINT ch.14.
	11	Uses INT14_2 at the input pin of EINT ch.14.

[bit27:26] EINT13S: External Interrupt Input Select bits

Selects input for EINT13.

Process		Description
Reading		Reads out the register value.
Writing	00	Uses INT13_0 at the input pin of EINT ch.13. [Initial value]
	01	Same as Writing 00
	10	Uses INT13_1 at the input pin of EINT ch.13.
	11	Uses INT13_2 at the input pin of EINT ch.13.

[bit25:24] EINT12S: External Interrupt Input Select bits

Selects input for EINT12.

Process		Description
Reading		Reads out the register value.
Writing	00	Uses INT12_0 at the input pin of EINT ch.12. [Initial value]
	01	Same as Writing 00.
	10	Uses INT12_1 at the input pin of EINT ch.12.
	11	Uses INT12_2 at the input pin of EINT ch.12.

[bit23:22] EINT11S: External Interrupt Input Select bits

Selects input for EINT11.

Process		Description
Reading		Reads out the register value.
Writing	00	Uses INT11_0 at the input pin of EINT ch.11. [Initial value]
	01	Same as Writing 00.
	10	Uses INT11_1 at the input pin of EINT ch.11.
	11	Uses INT11_2 at the input pin of EINT ch.11.

[bit21:20] EINT10S: External Interrupt Input Select bits

Selects input for EINT10.

Process		Description
Reading		Reads out the register value.
Writing	00	Uses INT10_0 at the input pin of EINT ch.10. [Initial value]
	01	Same as Writing 00.
	10	Uses INT10_1 at the input pin of EINT ch.10.
	11	Uses INT10_2 at the input pin of EINT ch.10.

[bit19:18] EINT09S: External Interrupt Input Select bits

Selects input for EINT09.

Process		Description
Reading		Reads out the register value.
Writing	00	Uses INT09_0 at the input pin of EINT ch.9. [Initial value]
	01	Same as Writing 00.
	10	Uses INT09_1 at the input pin of EINT ch.9.
	11	Uses INT09_2 at the input pin of EINT ch.9.

[bit17:16] EINT08S: External Interrupt Input Select bits

Selects input for EINT08.

Process		Description
Reading		Reads out the register value.
Writing	00	Uses INT08_0 at the input pin of EINT ch.8. [Initial value]
	01	Same as Writing 00.
	10	Uses INT08_1 at the input pin of EINT ch.8.
	11	Uses INT08_2 at the input pin of EINT ch.8.

[bit15:14] EINT07S: External Interrupt Input Select bits

Selects input for EINT07.

Process		Description
Reading		Reads out the register value.
Writing	00	Uses INT07_0 at the input pin of EINT ch.7. [Initial value]
	01	Same as Writing 00.
	10	Uses INT07_1 at the input pin of EINT ch.7.
	11	Uses INT07_2 at the input pin of EINT ch.7.

[bit13:12] EINT06S: External Interrupt Input Select bits

Selects input for EINT06.

Process		Description
Reading		Reads out the register value.
Writing	00	Uses INT06_0 at the input pin of EINT ch.6. [Initial value]
	01	Same as Writing 00.
	10	Uses INT06_1 at the input pin of EINT ch.6.
	11	Uses INT06_2 at the input pin of EINT ch.6.

[bit11:10] EINT05S: External Interrupt Input Select bits

Selects input for EINT05.

Process		Description
Reading		Reads out the register value.
Writing	00	Uses INT05_0 at the input pin of EINT ch.5. [Initial value]
	01	Same as Writing 00.
	10	Uses INT05_1 at the input pin of EINT ch.5.
	11	Uses INT05_2 at the input pin of EINT ch.5.

[bit9:8] EINT04S: External Interrupt Input Select bits

Selects input for EINT04.

Process		Description
Reading		Reads out the register value.
Writing	00	Uses INT04_0 at the input pin of EINT ch.4. [Initial value]
	01	Same as Writing 00.
	10	Uses INT04_1 at the input pin of EINT ch.4.
	11	Uses INT04_2 at the input pin of EINT ch.4.

[bit7:6] EINT03S: External Interrupt Input Select bits

Selects input for EINT03.

Process		Description
Reading		Reads out the register value.
Writing	00	Uses INT03_0 at the input pin of EINT ch.3. [Initial value]
	01	Same as Writing 00.
	10	Uses INT03_1 at the input pin of EINT ch.3.
	11	Uses INT03_2 at the input pin of EINT ch.3.

[bit5:4] EINT02S: External Interrupt Input Select bits

Selects input for EINT02.

Process		Description
Reading		Reads out the register value.
Writing	00	Uses INT02_0 at the input pin of EINT ch.2. [Initial value]
	01	Same as Writing 00.
	10	Uses INT02_1 at the input pin of EINT ch.2.
	11	Uses INT02_2 at the input pin of EINT ch.2.

[bit3:2] EINT01S: External Interrupt Input Select bits

Selects input for EINT01.

Process		Description
Reading		Reads out the register value.
Writing	00	Uses INT01_0 at the input pin of EINT ch.1. [Initial value]
	01	Same as Writing 00.
	10	Uses INT01_1 at the input pin of EINT ch.1.
	11	Uses INT01_2 at the input pin of EINT ch.1.

[bit1:0] EINT00S: External Interrupt Input Select bits

Selects input for EINT00.

Process		Description
Reading		Reads out the register value.
Writing	00	Uses INT00_0 at the input pin of EINT ch.0. [Initial value]
	01	Same as Writing 00.
	10	Uses INT00_1 at the input pin of EINT ch.0.
	11	Uses INT00_2 at the input pin of EINT ch.0.

<Note>

This register is not initialized by deep standby transition reset.

4.15. Extended Pin Function Setting Register 07 (EPFR07)

The EPFR07 register assigns functions of multi-function serial ch.0 to ch.3.

■ Register Configuration

bit	31	30	29	28	27	26	25	24
Field	Reserved				SCK3B		SOT3B	
Attribute	-				R/W		R/W	
Initial value	-				00		00	

bit	23	22	21	20	19	18	17	16
Field	SIN3S		SCK2B		SOT2B		SIN2S	
Attribute	R/W		R/W		R/W		R/W	
Initial value	00		00		00		00	

bit	15	14	13	12	11	10	9	8
Field	SCK1B		SOT1B		SIN1S		SCK0B	
Attribute	R/W		R/W		R/W		R/W	
Initial value	00		00		00		00	

bit	7	6	5	4	3	2	1	0
Field	SOT0B		SIN0S		Reserved			
Attribute	R/W		R/W		-			
Initial value	00		00		-			

■ Register Function

[bit31:28] Reserved: Reserved bits

"0b0000" is read from these bits.

When writing these bits, set them to "0b0000".

[bit27:26] SCK3B: SCK3 Input/Output Select bits

Selects input/output for SCK3.

Process		Description
Reading		Reads out the register value.
Writing	00	Uses SCK3_0 at the input pin of MFS ch.3 SCK. Does not produce output. [Initial value]
	01	Uses SCK3_0 at the input pin of MFS ch.3 SCK. Uses SCK3_0 at the output pin.
	10	Uses SCK3_1 at the input pin of MFS ch.3 SCK. Uses SCK3_1 at the output pin.
	11	Uses SCK3_2 at the input pin of MFS ch.3 SCK. Uses SCK3_2 at the output pin.

[bit25:24] SOT3B: SOT3 Input/Output Select bits

Selects input/output for SOT3.

Process		Description
Reading		Reads out the register value.
Writing	00	Uses SOT3_0 at the input pin of MFS ch.3 SOT. Does not produce output. [Initial value]
	01	Uses SOT3_0 at the input pin of MFS ch.3 SOT. Uses SOT3_0 at the output pin.
	10	Uses SOT3_1 at the input pin of MFS ch.3 SOT. Uses SOT3_1 at the output pin.
	11	Uses SOT3_2 at the input pin of MFS ch.3 SOT. Uses SOT3_2 at the output pin.

[bit23:22] SIN3S: SIN3 Input Select bits

Selects input for SIN3.

Process		Description
Reading		Reads out the register value.
Writing	00	Uses SIN3_0 at the input pin of MFS ch.3 SIN. [Initial value]
	01	Same as Writing 00.
	10	Uses SIN3_1 at the input pin of MFS ch.3 SIN.
	11	Uses SIN3_2 at the input pin of MFS ch.3 SIN.

[bit21:20] SCK2B: SCK2 Input/Output Select bits

Selects input/output for SCK2.

Process		Description
Reading		Reads out the register value.
Writing	00	Uses SCK2_0 at the input pin of MFS ch.2 SCK. Does not produce output. [Initial value]
	01	Uses SCK2_0 at the input pin of MFS ch.2 SCK. Uses SCK2_0 at the output pin.
	10	Uses SCK2_1 at the input pin of MFS ch.2 SCK. Uses SCK2_1 at the output pin.
	11	Uses SCK2_2 at the input pin of MFS ch.2 SCK. Uses SCK2_2 at the output pin.

[bit19:18] SOT2B: SOT2 Input/Output Select bits

Selects input/output for SOT2.

Process		Description
Reading		Reads out the register value.
Writing	00	Uses SOT2_0 at the input pin of MFS ch.2 SOT. Does not produce output. [Initial value]
	01	Uses SOT2_0 at the input pin of MFS ch.2 SOT. Uses SOT2_0 at the output pin.
	10	Uses SOT2_1 at the input pin of MFS ch.2 SOT. Uses SOT2_1 at the output pin.
	11	Uses SOT2_2 at the input pin of MFS ch.2 SOT. Uses SOT2_2 at the output pin.

[bit17:16] SIN2S: SIN2 Input Select bits

Selects input for SIN2.

Process		Description
Reading		Reads out the register value.
Writing	00	Uses SIN2_0 at the input pin of MFS ch.2 SIN. [Initial value]
	01	Same as Writing 00.
	10	Uses SIN2_1 at the input pin of MFS ch.2 SIN.
	11	Uses SIN2_2 at the input pin of MFS ch.2 SIN.

[bit15:14] SCK1B: SCK1 Input/Output Select bits

Selects input/output for SCK1.

Process		Description
Reading		Reads out the register value.
Writing	00	Uses SCK1_0 at the input pin of MFS ch.1 SCK. Does not produce output. [Initial value]
	01	Uses SCK1_0 at the input pin of MFS ch.1 SCK. Uses SCK1_0 at the output pin.
	10	Uses SCK1_1 at the input pin of MFS ch.1 SCK. Uses SCK1_1 at the output pin.
	11	Uses SCK1_2 at the input pin of MFS ch.1 SCK. Uses SCK1_2 at the output pin.

[bit13:12] SOT1B: SOT1 Input/Output Select bits

Selects input/output for SOT1.

Process		Description
Reading		Reads out the register value.
Writing	00	Uses SOT1_0 at the input pin of MFS ch.1 SOT. Does not produce output. [Initial value]
	01	Uses SOT1_0 at the input pin of MFS ch.1 SOT. Uses SOT1_0 at the output pin.
	10	Uses SOT1_1 at the input pin of MFS ch.1 SOT. Uses SOT1_1 at the output pin.
	11	Uses SOT1_2 at the input pin of MFS ch.1 SOT. Uses SOT1_2 at the output pin.

[bit11:10] SIN1S: SIN1 Input Select bits

Selects input for SIN1.

Process		Description
Reading		Reads out the register value.
Writing	00	Uses SIN1_0 at the input pin of MFS ch.1 SIN. [Initial value]
	01	Same as Writing 00.
	10	Uses SIN1_1 at the input pin of MFS ch.1 SIN.
	11	Uses SIN1_2 at the input pin of MFS ch.1 SIN.

[bit9:8] SCK0B: SCK0 Input/Output Select bits

Selects input/output for SCK0.

Process		Description
Reading		Reads out the register value.
Writing	00	Uses SCK0_0 at the input pin of MFS ch.0 SCK. Does not produce output. [Initial value]
	01	Uses SCK0_0 at the input pin of MFS ch.0 SCK. Uses SCK0_0 at the output pin.
	10	Uses SCK0_1 at the input pin of MFS ch.0 SCK. Uses SCK0_1 at the output pin.
	11	Uses SCK0_2 at the input pin of MFS ch.0 SCK. Uses SCK0_2 at the output pin.

[bit7:6] SOT0B: SOT0 Input/Output Select bits

Selects input/output for SOT0.

Process		Description
Reading		Reads out the register value.
Writing	00	Uses SOT0_0 at the input pin of MFS ch.0 SOT. Does not produce output. [Initial value]
	01	Uses SOT0_0 at the input pin of MFS ch.0 SOT. Uses SOT0_0 at the output pin.
	10	Uses SOT0_1 at the input pin of MFS ch.0 SOT. Uses SOT0_1 at the output pin.
	11	Uses SOT0_2 at the input pin of MFS ch.0 SOT. Uses SOT0_2 at the output pin.

[bit5:4] SIN0S: SIN0 Input Select bits

Selects input for SIN0.

Process		Description
Reading		Reads out the register value.
Writing	00	Uses SIN0_0 at the input pin of MFS ch.0 SIN. [Initial value]
	01	Same as Writing 00.
	10	Uses SIN0_1 at the input pin of MFS ch.0 SIN.
	11	Uses SIN0_2 at the input pin of MFS ch.0 SIN.

[bit3:0] Reserved: Reserved bits

"0b0000" is read from these bits.

When writing these bits, set them to "0b0000".

<Note>

This register is not initialized by deep standby transition reset.

4.16. Extended Pin Function Setting Register 08 (EPFR08)

The EPFR08 register assigns functions of multi-function serial ch.4 to ch.7.

■ Register Configuration

bit	31	30	29	28	27	26	25	24
Field	Reserved				SCK7B		SOT7B	
Attribute	-				R/W		R/W	
Initial value	-				00		00	

bit	23	22	21	20	19	18	17	16
Field	SIN7S		SCK6B		SOT6B		SIN6S	
Attribute	R/W		R/W		R/W		R/W	
Initial value	00		00		00		00	

bit	15	14	13	12	11	10	9	8
Field	SCK5B		SOT5B		SIN5S		SCK4B	
Attribute	R/W		R/W		R/W		R/W	
Initial value	00		00		00		00	

bit	7	6	5	4	3	2	1	0
Field	SOT4B		SIN4S		CTS4S		RTS4E	
Attribute	R/W		R/W		R/W		R/W	
Initial value	00		00		00		00	

■ Register Function

[bit31:28] Reserved: Reserved bits

"0b0000" is read from these bits.

When writing these bits, set them to "0b0000".

[bit27:26] SCK7B: SCK7 Input/Output Select bits

Selects input/output for SCK7.

Process		Description
Reading		Reads out the register value.
Writing	00	Uses SCK7_0 at the input pin of MFS ch.7 SCK. Does not produce output. [Initial value]
	01	Uses SCK7_0 at the input pin of MFS ch.7 SCK. Uses SCK7_0 at the output pin.
	10	Uses SCK7_1 at the input pin of MFS ch.7 SCK. Uses SCK7_1 at the output pin.
	11	Uses SCK7_2 at the input pin of MFS ch.7 SCK. Uses SCK7_2 at the output pin.

[bit25:24] SOT7B: SOT7 Input/Output Select bits

Selects input/output for SOT7.

Process		Description
Reading		Reads out the register value.
Writing	00	Uses SOT7_0 at the input pin of MFS ch.7 SOT. Does not produce output. [Initial value]
	01	Uses SOT7_0 at the input pin of MFS ch.7 SOT. Uses SOT7_0 at the output pin.
	10	Uses SOT7_1 at the input pin of MFS ch.7 SOT. Uses SOT7_1 at the output pin.
	11	Uses SOT7_2 at the input pin of MFS ch.7 SOT. Uses SOT7_2 at the output pin.

[bit23:22] SIN7S: SIN7 Input Select bits

Selects input for SIN7.

Process		Description
Reading		Reads out the register value.
Writing	00	Uses SIN7_0 at the input pin of MFS ch.7 SIN. [Initial value]
	01	Same as Writing 00.
	10	Uses SIN7_1 at the input pin of MFS ch.7 SIN.
	11	Uses SIN7_2 at the input pin of MFS ch.7 SIN.

[bit21:20] SCK6B: SCK6 Input/Output Select bits

Selects input/output for SCK6.

Process		Description
Reading		Reads out the register value.
Writing	00	Uses SCK6_0 at the input pin of MFS ch.6 SCK. Does not produce output. [Initial value]
	01	Uses SCK6_0 at the input pin of MFS ch.6 SCK. Uses SCK6_0 at the output pin.
	10	Uses SCK6_1 at the input pin of MFS ch.6 SCK. Uses SCK6_1 at the output pin.
	11	Uses SCK6_2 at the input pin of MFS ch.6 SCK. Uses SCK6_2 at the output pin.

[bit19:18] SOT6B: SOT6 Input/Output Select bits

Selects input/output for SOT6.

Process		Description
Reading		Reads out the register value.
Writing	00	Uses SOT6_0 at the input pin of MFS ch.6 SOT. Does not produce output. [Initial value]
	01	Uses SOT6_0 at the input pin of MFS ch.6 SOT. Uses SOT6_0 at the output pin.
	10	Uses SOT6_1 at the input pin of MFS ch.6 SOT. Uses SOT6_1 at the output pin.
	11	Uses SOT6_2 at the input pin of MFS ch.6 SOT. Uses SOT6_2 at the output pin.

[bit17:16] SIN6S: SIN6 Input Select bits

Selects input for SIN6.

Process		Description
Reading		Reads out the register value.
Writing	00	Uses SIN6_0 at the input pin of MFS ch.6 SIN. [Initial value]
	01	Same as Writing 00.
	10	Uses SIN6_1 at the input pin of MFS ch.6 SIN.
	11	Uses SIN6_2 at the input pin of MFS ch.6 SIN.

[bit15:14] SCK5B: SCK5 Input/Output Select bits

Selects input/output for SCK5.

Process		Description
Reading		Reads out the register value.
Writing	00	Uses SCK5_0 at the input pin of MFS ch.5 SCK. Does not produce output. [Initial value]
	01	Uses SCK5_0 at the input pin of MFS ch.5 SCK. Uses SCK5_0 at the output pin.
	10	Uses SCK5_1 at the input pin of MFS ch.5 SCK. Uses SCK5_1 at the output pin.
	11	Uses SCK5_2 at the input pin of MFS ch.5 SCK. Uses SCK5_2 at the output pin.

[bit13:12] SOT5B: SOT5 Input/Output Select bits

Selects input/output for SOT5.

Process		Description
Reading		Reads out the register value.
Writing	00	Uses SOT5_0 at the input pin of MFS ch.5 SOT. Does not produce output. [Initial value]
	01	Uses SOT5_0 at the input pin of MFS ch.5 SOT. Uses SOT5_0 at the output pin.
	10	Uses SOT5_1 at the input pin of MFS ch.5 SOT. Uses SOT5_1 at the output pin.
	11	Uses SOT5_2 at the input pin of MFS ch.5 SOT. Uses SOT5_2 at the output pin.

[bit11:10] SIN5S: SIN5 Input Select bits

Selects input for SIN5.

Process		Description
Reading		Reads out the register value.
Writing	00	Uses SIN5_0 at the input pin of MFS ch.5 SIN. [Initial value]
	01	Same as Writing 00.
	10	Uses SIN5_1 at the input pin of MFS ch.5 SIN.
	11	Uses SIN5_2 at the input pin of MFS ch.5 SIN.

[bit9:8] SCK4B: SCK4 Input/Output Select bits

Selects input/output for SCK4.

Process		Description
Reading		Reads out the register value.
Writing	00	Uses SCK4_0 at the input pin of MFS ch.4 SCK. Does not produce output. [Initial value]
	01	Uses SCK4_0 at the input pin of MFS ch.4 SCK. Uses SCK4_0 at the output pin.
	10	Uses SCK4_1 at the input pin of MFS ch.4 SCK. Uses SCK4_1 at the output pin.
	11	Uses SCK4_2 at the input pin of MFS ch.4 SCK. Uses SCK4_2 at the output pin.

[bit7:6] SOT4B: SOT4 Input/Output Select bits

Selects input/output for SOT4.

Process		Description
Reading		Reads out the register value.
Writing	00	Uses SOT4_0 at the input pin of MFS ch.4 SOT. Does not produce output. [Initial value]
	01	Uses SOT4_0 at the input pin of MFS ch.4 SOT. Uses SOT4_0 at the output pin.
	10	Uses SOT4_1 at the input pin of MFS ch.4 SOT. Uses SOT4_1 at the output pin.
	11	Uses SOT4_2 at the input pin of MFS ch.4 SOT. Uses SOT4_2 at the output pin.

[bit5:4] SIN4S: SIN4 Input Select bits

Selects input for SIN4.

Process		Description
Reading		Reads out the register value.
Writing	00	Uses SIN4_0 at the input pin of MFS ch.4 SIN. [Initial value]
	01	Same as Writing 00.
	10	Uses SIN4_1 at the input pin of MFS ch.4 SIN.
	11	Uses SIN4_2 at the input pin of MFS ch.4 SIN.

[bit3:2] CTS4S: CTS4 Input Select bits

Selects input for CTS4.

Process		Description
Reading		Reads out the register value.
Writing	00	Uses CTS4_0 at the input pin of MFS ch.4 CTS. [Initial value]
	01	Same as Writing 00.
	10	Uses CTS4_1 at the input pin of MFS ch.4 CTS.
	11	Uses CTS4_2 at the input pin of MFS ch.4 CTS.

[bit1:0] RTS4E: RTS4 Output Select bits

Selects output for RTS4.

Process		Description
Reading		Reads out the register value.
Writing	00	Does not produce output for MFS ch.4 RTS. [Initial value]
	01	Uses RTS4_0 at the output pin of MFS ch.4 RTS.
	10	Uses RTS4_1 at the output pin of MFS ch.4 RTS.
	11	Uses RTS4_2 at the output pin of MFS ch.4 RTS.

<Note>

This register is not initialized by deep standby transition reset.

4.17. Extended Pin Function Setting Register 09 (EPFR09)

The EPFR09 register assigns functions to CAN, ADC trigger, and QPRC peripheral pins.

■ Register Configuration

bit	31	30	29	28	27	26	25	24
Field	CTX1E		CRX1S		CTX0E		CRX0S	
Attribute	R/W		R/W		R/W		R/W	
Initial value	00		00		00		00	

bit	23	22	21	20	19	18	17	16
Field	ADTRG2S				ADTRG1S			
Attribute	R/W				R/W			
Initial value	0000				0000			

bit	15	14	13	12	11	10	9	8
Field	ADTRG0S				QZIN1S		QBIN1S	
Attribute	R/W				R/W		R/W	
Initial value	0000				00		00	

bit	7	6	5	4	3	2	1	0
Field	QAIN1S		QZIN0S		QBIN0S		QAIN0S	
Attribute	R/W		R/W		R/W		R/W	
Initial value	00		00		00		00	

■ Register Function

[bit31:30] CTX1E: CTX1E Output Select bits

Selects output for CAN TX1.

Process		Description
Reading		Reads out the register value.
Writing	00	Does not produce output for CAN ch.1 TX. [Initial value]
	01	Sets the output pin of CAN ch.1 TX to TX1_0.
	10	Sets the output pin of CAN ch.1 TX to TX1_1.
	11	Sets the output pin of CAN ch.1 TX to TX1_2.

[bit29:28] CRX1S: CRX1S Input Select bits

Selects input for CAN RX1.

Process		Description
Reading		Reads out the register value.
Writing	00	Sets the input pin of CAN ch.1 RX to RX1_0. [Initial value]
	01	Same as Writing 00.
	10	Sets the input pin of CAN ch.1 RX to RX1_1.
	11	Sets the input pin of CAN ch.1 RX to RX1_2.

[bit27:26] CTX0E: CTX0E Output Select bits

Selects output for CAN TX0.

Process		Description
Reading		Reads out the register value.
Writing	00	Does not produce output for CAN ch.0 TX. [Initial value]
	01	Sets the output pin of CAN ch.0 TX to TX0_0.
	10	Sets the output pin of CAN ch.0 TX to TX0_1.
	11	Sets the output pin of CAN ch.0 TX to TX0_2.

[bit25:24] CRX0S: CRX0S Input Select bits

Selects input for CAN RX0.

Process		Description
Reading		Reads out the register value.
Writing	00	Sets the input pin of CAN ch.0 RX to RX0_0. [Initial value]
	01	Same as Writing 00.
	10	Sets the input pin of CAN ch.0 RX to RX0_1.
	11	Sets the input pin of CAN ch.0 RX to RX0_2.

[bit23:20] ADTRG2S: ADTRG2 Input Select bits

Selects input for ADTRG2.

Process		Description
Reading		Reads out the register value.
Writing	0000	Uses ADTG_0 at the input pin of ADC unit 2's startup trigger. [Initial value]
	0001	Same as Writing 0000.
	0010	Uses ADTG_1 at the input pin of ADC unit 2's startup trigger.
	0011	Uses ADTG_2 at the input pin of ADC unit 2's startup trigger.
	0100	Uses ADTG_3 at the input pin of ADC unit 2's startup trigger.
	0101	Uses ADTG_4 at the input pin of ADC unit 2's startup trigger.
	0110	Uses ADTG_5 at the input pin of ADC unit 2's startup trigger.
	0111	Uses ADTG_6 at the input pin of ADC unit 2's startup trigger.
	1000	Uses ADTG_7 at the input pin of ADC unit 2's startup trigger.
	1001	Uses ADTG_8 at the input pin of ADC unit 2's startup trigger.
Writing other data		Setting is prohibited.

[bit19:16] ADTRG1S: ADTRG1 Input Select bits

Selects input for ADTRG1.

Process		Description
Reading		Reads out the register value.
Writing	0000	Uses ADTG_0 at the input pin of ADC unit 1's startup trigger. [Initial value]
	0001	Same as Writing 0000.
	0010	Uses ADTG_1 at the input pin of ADC unit 1's startup trigger.
	0011	Uses ADTG_2 at the input pin of ADC unit 1's startup trigger.
	0100	Uses ADTG_3 at the input pin of ADC unit 1's startup trigger.
	0101	Uses ADTG_4 at the input pin of ADC unit 1's startup trigger.
	0110	Uses ADTG_5 at the input pin of ADC unit 1's startup trigger.
	0111	Uses ADTG_6 at the input pin of ADC unit 1's startup trigger.
	1000	Uses ADTG_7 at the input pin of ADC unit 1's startup trigger.
	1001	Uses ADTG_8 at the input pin of ADC unit 1's startup trigger.
Writing other data		Setting is prohibited.

[bit15:12] ADTRG0S: ADTRG0 Input Select bits

Selects input for ADTRG0.

Process		Description
Reading		Reads out the register value.
Writing	0000	Uses ADTG_0 at the input pin of ADC unit 0's startup trigger. [Initial value]
	0001	Same as Writing 0000.
	0010	Uses ADTG_1 at the input pin of ADC unit 0's startup trigger.
	0011	Uses ADTG_2 at the input pin of ADC unit 0's startup trigger.
	0100	Uses ADTG_3 at the input pin of ADC unit 0's startup trigger.
	0101	Uses ADTG_4 at the input pin of ADC unit 0's startup trigger.
	0110	Uses ADTG_5 at the input pin of ADC unit 0's startup trigger.
	0111	Uses ADTG_6 at the input pin of ADC unit 0's startup trigger.
	1000	Uses ADTG_7 at the input pin of ADC unit 0's startup trigger.
	1001	Uses ADTG_8 at the input pin of ADC unit 0's startup trigger.
Writing other data		Setting is prohibited.

[bit11:10] QZIN1S: QZIN1S Input Select bits

Selects input for QPRC ZIN1.

Process		Description
Reading		Reads out the register value.
Writing	00	Uses ZIN1_0 at the input pin of QPRC ch.1's ZIN. [Initial value]
	01	Same as Writing 00.
	10	Uses ZIN1_1 at the input pin of QPRC ch.1's ZIN.
	11	Uses ZIN1_2 at the input pin of QPRC ch.1's ZIN.

[bit9:8] QBIN1S: QBIN1S Input Select bits

Selects input for QPRC BIN1.

Process		Description
Reading		Reads out the register value.
Writing	00	Uses BIN1_0 at the input pin of QPRC ch.1's BIN. [Initial value]
	01	Same as Writing 00.
	10	Uses BIN1_1 at the input pin of QPRC ch.1's BIN.
	11	Uses BIN1_2 at the input pin of QPRC ch.1's BIN.

[bit7:6] QAIN1S: QAIN1S Input Select bits

Selects input for QPRC AIN1.

Process		Description
Reading		Reads out the register value.
Writing	00	Uses AIN1_0 at the input pin of QPRC ch.1's AIN. [Initial value]
	01	Same as Writing 00.
	10	Uses AIN1_1 at the input pin of QPRC ch.1's AIN.
	11	Uses AIN1_2 at the input pin of QPRC ch.1's AIN.

[bit5:4] QZIN0S: QZIN0S Input Select bits

Selects input for QPRC ZIN0.

Process		Description
Reading		Reads out the register value.
Writing	00	Uses ZIN0_0 at the input pin of QPRC ch.0's ZIN. [Initial value]
	01	Same as Writing 00.
	10	Uses ZIN0_1 at the input pin of QPRC ch.0's ZIN.
	11	Uses ZIN0_2 at the input pin of QPRC ch.0's ZIN.

[bit3:2] QBIN0S: QBIN0S Input Select bits

Selects input for QPRC BIN0.

Process		Description
Reading		Reads out the register value.
Writing	00	Uses BIN0_0 at the input pin of QPRC ch.0's BIN. [Initial value]
	01	Same as Writing 00.
	10	Uses BIN0_1 at the input pin of QPRC ch.0's BIN.
	11	Uses BIN0_2 at the input pin of QPRC ch.0's BIN.

[bit1:0] QAIN0S: QAIN0S Input Select bits

Selects input for QPRC AIN0.

Process		Description
Reading		Reads out the register value.
Writing	00	Uses AIN0_0 at the input pin of QPRC ch.0's AIN. [Initial value]
	01	Same as Writing 00.
	10	Uses AIN0_1 at the input pin of QPRC ch.0's AIN.
	11	Uses AIN0_2 at the input pin of QPRC ch.0's AIN.

<Note>

This register is not initialized by deep standby transition reset.

4.18. Extended Pin Function Setting Register 10 (EPFR10)

The EPFR10 register assigns functions to external bus peripheral pins.
For Product TYPEs supporting this register, see Tables 4-2 and 4-3.
EPFR10 bit2 does not exist in TYPE0 product.

■ Register Configuration

bit	31	30	29	28	27	26	25	24
Field	UEA24E	UEA23E	UEA22E	UEA21E	UEA20E	UEA19E	UEA18E	UEA17E
Attribute	R/W	R/W	R/W	R/W	R/W	R/W	R/W	R/W
Initial value	0	0	0	0	0	0	0	0

bit	23	22	21	20	19	18	17	16
Field	UEA16E	UEA15E	UEA14E	UEA13E	UEA12E	UEA11E	UEA10E	UEA09E
Attribute	R/W	R/W	R/W	R/W	R/W	R/W	R/W	R/W
Initial value	0	0	0	0	0	0	0	0

bit	15	14	13	12	11	10	9	8
Field	UEA08E	UEAOOE	UECS7E	UECS6E	UECS5E	UECS4E	UECS3E	UECS2E
Attribute	R/W	R/W	R/W	R/W	R/W	R/W	R/W	R/W
Initial value	0	0	0	0	0	0	0	0

bit	7	6	5	4	3	2	1	0
Field	UECS1E	UEFLSE	UEOEXE	UEDQME	UEWEXE	UECLKE	UEDTHB	UEDEFB
Attribute	R/W	R/W	R/W	R/W	R/W	R/W	R/W	R/W
Initial value	0	0	0	0	0	0	0	0

■ Register Function

[bit31] UEA24E: UEA24E Output Select bit

Selects output for external bus Address24.

Process		Description
Reading		Reads out the register value.
Writing	0	Does not produce output for user external bus MAD24. [Initial value]
	1	Produces output for user external bus MAD24.

[bit30] UEA23E: UEA23E Output Select bit

Selects output for external bus Address23.

Process		Description
Reading		Reads out the register value.
Writing	0	Does not produce output for user external bus MAD23. [Initial value]
	1	Produces output for user external bus MAD23.

[bit29] UEA22E: UEA22E Output Select bit

Selects output for external bus Address22.

Process		Description
Reading		Reads out the register value.
Writing	0	Does not produce output for user external bus MAD22. [Initial value]
	1	Produces output for user external bus MAD22.

[bit28] UEA21E: UEA21E Output Select bit

Selects output for external bus Address21.

Process		Description
Reading		Reads out the register value.
Writing	0	Does not produce output for user external bus MAD21. [Initial value]
	1	Produces output for user external bus MAD21.

[bit27] UEA20E: UEA20E Output Select bit

Selects output for external bus Address20.

Process		Description
Reading		Reads out the register value.
Writing	0	Does not produce output for user external bus MAD20. [Initial value]
	1	Produces output for user external bus MAD20.

[bit26] UEA19E: UEA19E Output Select bit

Selects output for external bus Address19.

Process		Description
Reading		Reads out the register value.
Writing	0	Does not produce output for user external bus MAD19. [Initial value]
	1	Produce output for user external bus MAD19.

[bit25] UEA18E: UEA18E Output Select bit

Selects output for external bus Address18.

Process		Description
Reading		Reads out the register value.
Writing	0	Does not produce output for user external bus MAD18. [Initial value]
	1	Produces output for user external bus MAD18.

[bit24] UEA17E: UEA17E Output Select bit

Selects output for external bus Address17.

Process		Description
Reading		Reads out the register value.
Writing	0	Does not produce output for user external bus MAD17. [Initial value]
	1	Produces output for user external bus MAD17.

[bit23] UEA16E: UEA16E Output Select bit

Selects output for external bus Address16.

Process		Description
Reading		Reads out the register value.
Writing	0	Does not produce output for user external bus MAD16. [Initial value]
	1	Produces output for user external bus MAD16.

[bit22] UEA15E: UEA15E Output Select bit

Selects output for external bus Address15.

Process		Description
Reading		Reads out the register value.
Writing	0	Does not produce output for user external bus MAD15. [Initial value]
	1	Produces output for user external bus MAD15.

[bit21] UEA14E: UEA14E Output Select bit

Selects output for external bus Address14.

Process		Description
Reading		Reads out the register value.
Writing	0	Does not produce output for user external bus MAD14. [Initial value]
	1	Produces output for user external bus MAD14.

[bit20] UEA13E: UEA13E Output Select bit

Selects output for external bus Address13.

Process		Description
Reading		Reads out the register value.
Writing	0	Does not produce output for user external bus MAD13. [Initial value]
	1	Produces output for user external bus MAD13.

[bit19] UEA12E: UEA12E Output Select bit

Selects output for external bus Address12.

Process		Description
Reading		Reads out the register value.
Writing	0	Does not produce output for user external bus MAD12. [Initial value]
	1	Produces output for user external bus MAD12.

[bit18] UEA11E: UEA11E Output Select bit

Selects output for external bus Address11.

Process		Description
Reading		Reads out the register value.
Writing	0	Does not produce output for user external bus MAD11. [Initial value]
	1	Produces output for user external bus MAD11.

[bit17] UEA10E: UEA10E Output Select bit

Selects output for external bus Address10.

Process		Description
Reading		Reads out the register value.
Writing	0	Does not produce output for user external bus MAD10. [Initial value]
	1	Produces output for user external bus MAD10.

[bit16] UEA09E: UEA09E Output Select bit

Selects output for external bus Address09.

Process		Description
Reading		Reads out the register value.
Writing	0	Does not produce output for user external bus MAD09. [Initial value]
	1	Produces output for user external bus MAD09.

[bit15] UEA08E: UEA08E Output Select bit

Selects output for external bus Address08.

Process		Description
Reading		Reads out the register value.
Writing	0	Does not produce output for user external bus MAD08. [Initial value]
	1	Produces output for user external bus MAD08.

[bit14] UEAOOE: UEAOOE Output Select bit

Selects output for external bus Address00.

Process		Description
Reading		Reads out the register value.
Writing	0	Does not produce output for user external bus MAD00. [Initial value]
	1	Produces output for user external bus MAD00.

[bit13] UECS7E: UECS7E Output Select bit

Selects output for external bus CS7.

Process		Description
Reading		Reads out the register value.
Writing	0	Does not produce output for user external bus MCSX7. [Initial value]
	1	Produces output for user external bus MCSX7.

[bit12] UECS6E: UECS6E Output Select bit

Selects output for external bus CS6.

Process		Description
Reading		Reads out the register value.
Writing	0	Does not produce output for user external bus MCSX6. [Initial value]
	1	Selects output for user external bus MCSX6.

[bit11] UECS5E: UECS5E Output Select bit

Selects output for external bus CS5.

Process		Description
Reading		Reads out the register value.
Writing	0	Does not produce output for user external bus MCSX5. [Initial value]
	1	Produces output for user external bus MCSX5.

[bit10] UECS4E: UECS4E Output Select bit

Selects output for external bus CS4.

Process		Description
Reading		Reads out the register value.
Writing	0	Does not produce output for user external bus MCSX4. [Initial value]
	1	Produces output for user external bus MCSX4.

[bit9] UECS3E: UECS3E Output Select bit

Selects output for external bus CS3.

Process		Description
Reading		Reads out the register value.
Writing	0	Does not produce output for user external bus MCSX3. [Initial value]
	1	Produces output for user external bus MCSX3.

[bit8] UECS2E: UECS2E Output Select bit

Selects output for external bus CS2.

Process		Description
Reading		Reads out the register value.
Writing	0	Does not produce output for user external bus MCSX2. [Initial value]
	1	Produces output for user external bus MCSX2.

[bit7] UECS1E: UECS1E Output Select bit

Selects output for external bus CS1.

Process		Description
Reading		Reads out the register value.
Writing	0	Does not produce output for user external bus MCSX1. [Initial value]
	0	Produces output for user external bus MCSX1.

[bit6] UEFLSE: UEFLSE Output Select bit

Selects output for external bus NAND-Flash control signal.

Process		Description
Reading		Reads out the register value.
Writing	0	Does not produce output for user external bus MNALE, MNCLE, MNWEX, or MNREX. [Initial value]
	1	Produces output for user external bus MNALE, MNCLE, MNWEX, and MNREX.

[bit5] UEOEXE: UEOEXE Output Select bit

Selects output for external bus OEX.

Process		Description
Reading		Reads out the register value.
Writing	0	Does not produce output for user external bus MOEX. [Initial value]
	1	Produces output for user external bus MOEX.

[bit4] UEDQME: UEDQME Output Select bit

Selects output for external bus DQM.

Process		Description
Reading		Reads out the register value.
Writing	0	Does not produce output for user external bus MDQM1or MDQM0. [Initial value]
	1	Produces output for user external bus MDQM1 and MDQM0.

[bit3] UEWEXE: UEWEXE Output Select bit

Selects output for external bus WEX.

Process		Description
Reading		Reads out the register value.
Writing	0	Does not produce output for user external bus MWEX. [Initial value]
	1	Produces output for user external bus MWEX.

[bit2] UECLKE: UECLKE Output Select bit

Selects output for external bus clock.

Process		Description
Reading		Reads out the register value.
Writing	0	Does not produce output for user external bus MCLKOUT. [Initial value]
	1	Produces output for user external bus MCLKOUT.

[bit1] UEDTHB: UEDTHB Input/Output Select bit

Selects input/output for external bus data.

Process		Description
Reading		Reads out the register value.
Writing	0	Does not produce output for user external bus MADATA15 to MADATA 08. [Initial value] Input of user external bus MADATA 15 to MADATA 08 is connected to the pin.
	1	Produces output for user external bus MADATA 15 to MADATA 08. Input of user external bus MADATA 15 to MADATA 08 is connected to the pin.

[bit0] UEDEFB: UEDEFB Input/Output Select bit

Selects input/output for external bus signal.

Process		Description
Reading		Reads out the register value.
Writing	0	Does not produce output for user external bus MAD07 to MAD01. Does not produce output for user external bus MCSX0. Does not produce output for user external bus MADATA 07 to MADATA 00. Input of user external bus MADATA 07 to MADATA 00 is connected to the pin. [Initial value]
	1	Produces output for user external bus MAD07 to MAD01. Produces output for user external bus MCSX0. Produces output for user external bus MADATA 7 to MADATA 0. Input of user external bus MADATA 7 to MADATA 0 is connected to the pin.

<Notes>

- I/O selection of the external bus data[15:7] can be controlled collectively with EPFR10.bit1.
  I/O selection of the external bus data[15:7] can be controlled by each bit also with EPFR11.bit[24:17]
  EPFR10.bit1 setting has the higher priority than EPFR11.bit[24:17] setting.
  To control I/O selection by setting EPFR11.bit[24:17], it is necessary to set EPFR10.bit1=0.
- I/O selection of the external bus address[7:1], MCSX0, and external bus data[7:0] can be controlled collectively with EPFR10.bit0.
  I/O selection of the external bus address[7:1], MCSX0, and external bus data[7:0] can be controlled by each bit also with EPFR11.bit[16:1].
  EPFR10.bit0 setting has the higher priority than EPFR11.bit[16:1] setting.
  To control I/O selection by setting EPFR11.bit[16:1], it is necessary to set EPFR10.bit0=0.
- EPFR10.bit2 is not available for TYPE0 product.
  In TYPE0 products, write "0" to this bit.
  In TYPE0 products, MADATA is described as MDATA.
- This register is not initialized by deep standby transition reset.

4.19. Extended Pin Function Setting Register 11 (EPFR11)

The EPFR11 register assigns functions to external bus peripheral pins.
For product TYPESs supporting this register, see Table 4-2 and Table 4-3.

■ Register Configuration

bit	31	30	29	28	27	26	25	24
Field	Reserved						UERLC	UED15B
Attribute							R/W	R/W
Initial value							0	0

bit	23	22	21	20	19	18	17	16
Field	UED14B	UED13B	UED12B	UED11B	UED10B	UED09B	UED08B	UED07B
Attribute	R/W	R/W	R/W	R/W	R/W	R/W	R/W	R/W
Initial value	0	0	0	0	0	0	0	0

bit	15	14	13	12	11	10	9	8
Field	UED06B	UED05B	UED04B	UED03B	UED02B	UED01B	UED00B	UEA07E
Attribute	R/W	R/W	R/W	R/W	R/W	R/W	R/W	R/W
Initial value	0	0	0	0	0	0	0	0

bit	7	6	5	4	3	2	1	0
Field	UEA06E	UEA05E	UEA04E	UEA03E	UEA02E	UEA01E	UECS0E	UEALEE
Attribute	R/W	R/W	R/W	R/W	R/W	R/W	R/W	R/W
Initial value	0	0	0	0	0	0	0	0

■ Register Function

[bit31:26] Reserved: Reserved bits

"0b000000" is read from these bits.

When writing these bits, set them to "0b000000".

[bit25] UERLC: UERLC relocation select bit

Selects relocation of the external bus pin.

Process		Description
Reading		Reads out the register value.
Writing	0	Uses relocate number "0" for the user external bus. [Initial value]
	1	Uses relocate number "1" for the user external bus.

Note: It depends on the product which relocate number is existed for user external bus.
See "Data sheet" of each product for the relocate number.

[bit24] UED15B: UED15B Input/Output Select bit

Selects input/output for external bus data 15.

Process		Description
Reading		Reads out the register value.
Writing	0	Does not produce output for user external bus MADATA15. [Initial value] Input of user external bus MADATA15 is connected to the pin.
	1	Produces output for user external bus MADATA15. Input of user external bus MADATA15 is connected to the pin.

[bit23] UED14B: UED14B Output Select bit

Selects output for external bus data 14.

Process		Description
Reading		Reads out the register value.
Writing	0	Does not produce output for user external bus MADATA14. [Initial value] Input of user external bus MADATA14 is connected to the pin.
	1	Produces output for user external bus MADATA14. Input of user external bus MADATA14 is connected to the pin.

[bit22] UED13B: UED13B Output Select bit

Selects output for external bus data 13.

Process		Description
Reading		Reads out the register value.
Writing	0	Does not produce output for user external bus MADATA13. [Initial value] Input of user external bus MADATA13 is connected to the pin.
	1	Produces output for user external bus MADATA13. Input of user external bus MADATA13 is connected to the pin.

[bit21] UED12B: UED12B Output Select bit

Selects output for external bus data 12.

Process		Description
Reading		Reads out the register value.
Writing	0	Does not produce output for user external bus MADATA12. [Initial value] Input of user external bus MADATA12 is connected to the pin.
	1	Produces output for user external bus MADATA12. Input of user external bus MADATA12 is connected to the pin.

[bit20] UED11B: UED11B Output Select bit

Selects output for external bus data 11.

Process		Description
Reading		Reads out the register value.
Writing	0	Does not produce output for user external bus MADATA11. [Initial value] Input of user external bus MADATA11 is connected to the pin.
	1	Produces output for user external bus MADATA11. Input of user external bus MADATA11 is connected to the pin.

[bit19] UED10B: UED10B Output Select bit

Selects output for external bus data 10.

Process		Description
Reading		Reads out the register value.
Writing	0	Does not produce output for user external bus MADATA10. [Initial value] Input of user external bus MADATA10 is connected to the pin.
	1	Produces output for user external bus MADATA10. Input of user external bus MADATA10 is connected to the pin.

[bit18] UED09B: UED09B Output Select bit

Selects output for external bus data 09.

Process		Description
Reading		Reads out the register value.
Writing	0	Does not produce output for user external bus MADATA09. [Initial value] Input of user external bus MADATA09 is connected to the pin.
	1	Produces output for user external bus MADATA09. Input of user external bus MADATA09 is connected to the pin.

[bit17] UED08B: UED08B Output Select bit

Selects output for external bus data 08.

Process		Description
Reading		Reads out the register value.
Writing	0	Does not produce output for user external bus MADATA08. [Initial value] Input of user external bus MADATA08 is connected to the pin.
	1	Produces output for user external bus MADATA08. Input of user external bus MADATA08 is connected to the pin.

[bit16] UED07B: UED07B Output Select bit

Selects output for external bus data 07.

Process		Description
Reading		Reads out the register value.
Writing	0	Does not produce output for user external bus MADATA07. [Initial value] Input of user external bus MADATA07 is connected to the pin.
	1	Produces output for user external bus MADATA07. Input of user external bus MADATA07 is connected to the pin.

[bit15] UED06B: UED06B Output Select bit

Selects output for external bus data 06.

Process		Description
Reading		Reads out the register value.
Writing	0	Does not produce output for user external bus MADATA06. [Initial value] Input of user external bus MADATA06 is connected to the pin.
	1	Produces output for user external bus MADATA06. Input of user external bus MADATA06 is connected to the pin.

[bit14] UED05B: UED05B Output Select bit

Selects output for external bus data 05.

Process		Description
Reading		Reads out the register value.
Writing	0	Does not produce output for user external bus MADATA05. [Initial value] Input of user external bus MADATA05 is connected to the pin.
	1	Produces output for user external bus MADATA05. Input of user external bus MADATA05 is connected to the pin.

[bit13] UED04B: UED04B Output Select bit

Selects output for external bus data 04.

Process		Description
Reading		Reads out the register value.
Writing	0	Does not produce output for user external bus MADATA04. [Initial value] Input of user external bus MADATA04 is connected to the pin.
	1	Produces output for user external bus MADATA04. Input of user external bus MADATA04 is connected to the pin.

[bit12] UED03B: UED03B Output Select bit

Selects output for external bus data 03.

Process		Description
Reading		Reads out the register value.
Writing	0	Does not produce output for user external bus MADATA03. [Initial value] Input of user external bus MADATA03 is connected to the pin.
	1	Produces output for user external bus MADATA03. Input of user external bus MADATA03 is connected to the pin.

[bit11] UED02B: UED02B Output Select bit

Selects output for external bus data 02.

Process		Description
Reading		Reads out the register value.
Writing	0	Does not produce output for user external bus MADATA02. [Initial value] Input of user external bus MADATA02 is connected to the pin.
	1	Produces output for user external bus MADATA02. Input of user external bus MADATA02 is connected to the pin.

[bit10] UED01B: UED01B Output Select bit

Selects output for external bus data 01.

Process		Description
Reading		Reads out the register value.
Writing	0	Does not produce output for user external bus MADATA01. [Initial value] Input of user external bus MADATA01 is connected to the pin.
	1	Produces output for user external bus MADATA01. Input of user external bus MADATA01 is connected to the pin.

[bit9] UED00B: UED00B Output Select bit

Selects output for external bus data 00.

Process		Description
Reading		Reads out the register value.
Writing	0	Does not produce output for user external bus MADATA00. [Initial value] Input of user external bus MADATA00 is connected to the pin.
	1	Produces output for user external bus MADATA00. Input of user external bus MADATA00 is connected to the pin.

[bit8] UEA07E: UEA07E Output Select bit

Selects output for external bus address07.

Process		Description
Reading		Reads out the register value.
Writing	0	Does not produce output for user external bus MAD07. [Initial value]
	1	Produces output for user external bus MAD07.

[bit7] UEA06E: UEA06E Output Select bit

Selects output for external bus address06.

Process		Description
Reading		Reads out the register value.
Writing	0	Does not produce output for user external bus MAD06. [Initial value]
	1	Produces output for user external bus MAD06.

[bit6] UEA05E: UEA05E Output Select bit

Selects output for external bus address05.

Process		Description
Reading		Reads out the register value.
Writing	0	Does not produce output for user external bus MAD05. [Initial value]
	1	Produces output for user external bus MAD05.

[bit5] UEA04E: UEA04E Output Select bit

Selects output for external bus address04.

Process		Description
Reading		Reads out the register value.
Writing	0	Does not produce output for user external bus MAD04. [Initial value]
	1	Produces output for user external bus MAD04.

[bit4] UEA03E: UEA03E Output Select bit

Selects output for external bus address03.

Process		Description
Reading		Reads out the register value.
Writing	0	Does not produce output for user external bus MAD03. [Initial value]
	1	Produces output for user external bus MAD03.

[bit3] UEA02E: UEA02E Output Select bit

Selects output for external bus address02.

Process		Description
Reading		Reads out the register value.
Writing	0	Does not produce output for user external bus MAD02. [Initial value]
	1	Produces output for user external bus MAD02.

[bit2] UEA01E: UEA01E Output Select bit

Selects output for external bus address01.

Process		Description
Reading		Reads out the register value.
Writing	0	Does not produce output for user external bus MAD01. [Initial value]
	1	Produces output for user external bus MAD01.

[bit1] UECS0E: UECS0E Output Select bit

Selects output for external bus CS0.

Process		Description
Reading		Reads out the register value.
Writing	0	Does not produce output for user external bus MCSX0. [Initial value]
	1	Produces output for user external bus MCSX0.

[bit0] UEALEE: UEALEE Output Select bit

Selects output for external bus ALE signal.

Process		Description
Reading		Reads out the register value.
Writing	0	Does not produce output for user external bus MALE. [Initial value]
	1	Produces output for user external bus MALE.

<Notes>

- I/O selection of the external bus data[15:7] can be controlled collectively with EPFR10.bit1.
  I/O selection of the external bus data[15:7] can be controlled by each bit also with EPFR11.bit[24:17]
  EPFR10.bit1 setting has the higher priority than EPFR11.bit[24:17] setting.
  To control I/O selection by setting EPFR11.bit[24:17], it is necessary to set EPFR10.bit1=0.
- I/O selection of the external bus address[7:1], MCSX0, and external bus data[7:0] can be controlled collectively with EPFR10.bit0.
  I/O selection of the external bus address[7:1], MCSX0, and external bus data[7:0] can be controlled by each bit also with EPFR11.bit[16:1].
  EPFR10.bit0 setting has the higher priority than EPFR11.bit[16:1] setting.
  To control I/O selection by setting EPFR11.bit[16:1], it is necessary to set EPFR10.bit0=0.
- This register is not initialized by deep standby transition reset.

4.20. Extended Pin Function Setting Register 12 (EPFR12)

The EPFR12 register assigns functions to pins of ch.8, ch.9, ch.10, and ch.11 of the base timer. For product TYPEs supporting this register, see Table 4-2 and Table 4-3.

■ Register Configuration

bit	31	30	29	28	27	26	25	24
Field	Reserved		TIOB11S		TIOA11E		TIOA11S	
Attribute	-		R/W		R/W		R/W	
Initial value	-		00		00		00	

bit	23	22	21	20	19	18	17	16
Field	Reserved		TIOB10S		TIOA10E		Reserved	
Attribute	-		R/W		R/W		-	
Initial value	-		00		00		-	

bit	15	14	13	12	11	10	9	8
Field	Reserved		TIOB9S		TIOA9E		TIOA9S	
Attribute	-		R/W		R/W		R/W	
Initial value	-		00		00		00	

bit	7	6	5	4	3	2	1	0
Field	Reserved		TIOB8S		TIOA8E		Reserved	
Attribute	-		R/W		R/W		-	
Initial value	-		00		00		-	

■ Register Function

[bit31:30] Reserved: Reserved bits

"0b00" is read out from these bits.

When writing these bits, set them to "0b00".

[bit29:28] TIOB11S: TIOB11 Input Select bits

Selects input for TIOB11.

Process		Description
Reading		Reads out the register value.
Writing	00	Uses TIOB11_0 at the input pin of BT ch.11 TIOB. [Initial value]
	01	Same as Writing 00.
	10	Uses TIOB11_1 at the input pin of BT ch.11 TIOB.
	11	Uses TIOB11_2 at the input pin of BT ch.11 TIOB.

[bit27:26] TIOA11E: TIOA11 Output Select bits

Selects output for TIOA11.

Process		Description
Reading		Reads out the register value.
Writing	00	Does not produce the output of the BT ch.11 TIOA. [Initial value]
	01	Uses TIOA11_0 at the output pin of BT ch.11 TIOA.
	10	Uses TIOA11_1 at the output pin of BT ch.11 TIOA.
	11	Uses TIOA11_2 at the output pin of BT ch.11 TIOA.

[bit25:24] TIOA11S: TIOA11 Input Select bits

Selects input for TIOA11.

Process		Description
Reading		Reads out the register value.
Writing	00	Uses TIOA11_0 at the input pin of BT ch.11 TIOA. [Initial value]
	01	Same as Writing 00.
	10	Uses TIOA11_1 at the input pin of BT ch.11 TIOA.
	11	Uses TIOA11_2 at the input pin of BT ch.11 TIOA.

[bit23:22] Reserved: Reserved bits

"0b00" is read out from these bits.

When writing these bits, set them to "0b00".

[bit21:20] TIOB10S: TIOB10 Input Select bits

Selects input for TIOB10.

Process		Description
Reading		Reads out the register value.
Writing	00	Uses TIOB10_0 at the input pin of BT ch.10 TIOB. [Initial value]
	01	Same as Writing 00.
	10	Uses TIOB10_1 at the input pin of BT ch.10 TIOB.
	11	Uses TIOB10_2 at the input pin of BT ch.10 TIOB.

[bit19:18] TIOA10E: TIOA10 Output Select bits

Selects output for TIOA10.

Process		Description
Reading		Reads out the register value.
Writing	00	Does not produce the output of the BT ch.10 TIOA. [Initial value]
	01	Uses TIOA10_0 at the output pin of BT ch.10 TIOA.
	10	Uses TIOA10_1 at the output pin of BT ch.10 TIOA.
	11	Uses TIOA10_2 at the output pin of BT ch.10 TIOA.

[bit17:14] Reserved: Reserved bits

"0b0000" is read out from these bits.

When writing these bits, set them to "0b0000".

[bit13:12] TIOB9S: TIOB9 Input Select bits

Selects input for TIOB9.

Process		Description
Reading		Reads out the register value.
Writing	00	Uses TIOB9_0 at the input pin of BT ch.9 TIOB. [Initial value]
	01	Same as Writing 00.
	10	Uses TIOB9_1 at the input pin of BT ch.9 TIOB.
	11	Uses TIOB9_2 at the input pin of BT ch.9 TIOB.

[bit11:10] TIOA9E: TIOA9 Output Select bits

Selects output for TIOA9.

Process		Description
Reading		Reads out the register value.
Writing	00	Does not produce the output of the BT ch.9 TIOA. [Initial value]
	01	Uses TIOA9_0 at the output pin of BT ch.9 TIOA.
	10	Uses TIOA9_1 at the output pin of BT ch.9 TIOA.
	11	Uses TIOA9_2 at the output pin of BT ch.9 TIOA.

[bit9:8] TIOA9S: TIOA9 Input Select bits

Selects input for TIOA9.

Process		Description
Reading		Reads out the register value.
Writing	00	Uses TIOA9_0 at the input pin of BT ch.9 TIOA. [Initial value]
	01	Same as Writing 00.
	10	Uses TIOA9_1 at the input pin of BT ch.9 TIOA.
	11	Uses TIOA9_2 at the input pin of BT ch.9 TIOA.

[bit7:6] Reserved: Reserved bits

"0b00" is read out from these bits.

When writing these bits, set them to "0b00".

[bit5:4] TIOB8S: TIOB8 Input Select bits

Selects input for TIOB8.

Process		Description
Reading		Reads out the register value.
Writing	00	Uses TIOB8_0 at the input pin of BT ch.8 TIOB. [Initial value]
	01	Same as Writing 00.
	10	Uses TIOB8_1 at the input pin of BT ch.8 TIOB.
	11	Uses TIOB8_2 at the input pin of BT ch.8 TIOB.

[bit3:2] TIOA8E: TIOA8 Output Select bits

Selects output for TIOA8.

Process		Description
Reading		Reads out the register value.
Writing	00	Does not produce the output of the BT ch.8 TIOA. [Initial value]
	01	Uses TIOA8_0 at the output pin of BT ch.8 TIOA.
	10	Uses TIOA8_1 at the output pin of BT ch.8 TIOA.
	11	Uses TIOA8_2 at the output pin of BT ch.8 TIOA.

[bit1:0] Reserved: Reserved bits

"0b00" is read out from these bits.

When writing these bits, set them to "0b00".

<Notes>

- TIOA
  Even channels are for output only.
  Odd channels are for both input and output.
- TIOB
  Input only.
- TIOA9, TIOA11, TIOA13, TIOA15 (odd number of "A") are not bidirectional pins so that choose either input pin or output pin for them.
  When output is chosen for odd TIOA channel, input setting will be ignored.

  Example1: Use TIOA11 as an output pin:
  When TIOA11 is output to TIOA11_0, select EPFR12:TIOA11E = 01.
  When TIOA11 is output to TIOA11_1, select EPFR12:TIOA11E = 10.
  When TIOA11 is output to TIOA11_2, select EPFR12:TIOA11E = 11.
  Settings for EPFR12:TIOA11S will be ignored.
  Select ADE=0, PFR=1 for selected pins (DDR will be ignored).
  All the output of other peripheral function pins which are also used by selected pins must be OFF.

  Example2: When TIOA11 is used as an input pin:
  Select EPFR12:TIOA11E = 00.
  When TIOA11 is input from TIOA11_0, select EPFR12:TIOA11S = 00 or 01.
  When TIOA11 is input from TIOA11_1, select EPFR12:TIOA11S = 10.
  When TIOA11 is input from TIOA11_2, select EPFR12:TIOA11S = 11.
  Select ADE=0, PFR=1 for selected pins (DDR will be ignored).
  All the output of other peripheral function pins which are also used by selected pins must be OFF.

  * When a pin is set to input, the output of the pin which is also used by selected pins (GPIO, other peripheral function pins) can be input to the base timer as Feedback with a setting not described above.

- This register is not initialized by deep standby transition reset.

4.21. Extended Pin Function Setting Register 13 (EPFR13)

The EPFR13 register assigns functions to pins of ch.12, ch.13, ch.14, and ch.15 of the base timer. For product TYPEs supporting this register, see Table 4-2 and Table 4-3.

■ Register Configuration

bit	31	30	29	28	27	26	25	24
Field	Reserved		TIOB15S		TIOA15E		TIOA15S	
Attribute	-		R/W		R/W		R/W	
Initial value	-		00		00		00	

bit	23	22	21	20	19	18	17	16
Field	Reserved		TIOB14S		TIOA14E		Reserved	
Attribute	-		R/W		R/W		-	
Initial value	-		00		00		-	

bit	15	14	13	12	11	10	9	8
Field	Reserved		TIOB13S		TIOA13E		TIOA13S	
Attribute	-		R/W		R/W		R/W	
Initial value	-		00		00		00	

bit	7	6	5	4	3	2	1	0
Field	Reserved		TIOB12S		TIOA12E		Reserved	
Attribute	-		R/W		R/W		-	
Initial value	-		00		00		-	

■ Register Function

[bit31:30] Reserved: Reserved bits

"0b00" is read out from these bits.

When writing these bits, set them to "0b00".

[bit29:28] TIOB15S: TIOB15 Input Select bits

Selects input for TIOB15.

Process		Description
Reading		Reads out the register value.
Writing	00	Uses TIOB15_0 at the input pin of BT ch.15 TIOB. [Initial value]
	01	Same as Writing 00.
	10	Uses TIOB15_1 at the input pin of BT ch.15 TIOB.
	11	Uses TIOB15_2 at the input pin of BT ch.15 TIOB.

[bit27:26] TIOA15E: TIOA15 Output Select bits

Selects output for TIOA15.

Process		Description
Reading		Reads out the register value.
Writing	00	Does not produce the output of the BT ch.15 TIOA. [Initial value]
	01	Uses TIOA15_0 at the output pin of BT ch.15 TIOA.
	10	Uses TIOA15_1 at the output pin of BT ch.15 TIOA.
	11	Uses TIOA15_2 at the output pin of BT ch.15 TIOA.

[bit25:24] TIOA15S: TIOA15 Input Select bits

Selects input for TIOA15.

Process		Description
Reading		Reads out the register value.
Writing	00	Uses TIOA15_0 at the input pin of BT ch.15 TIOA. [Initial value]
	01	Same as Writing 00.
	10	Uses TIOA15_1 at the input pin of BT ch.15 TIOA.
	11	Uses TIOA15_2 at the input pin of BT ch.15 TIOA.

[bit23:22] Reserved: Reserved bits

"0b00" is read out from these bits.

When writing these bits, set them to "0b00".

[bit21:20] TIOB14S: TIOB14 Input Select bits

Selects input for TIOB14.

Process		Description
Reading		Reads out the register value.
Writing	00	Uses TIOB14_0 at the input pin of BT ch.14 TIOB. [Initial value]
	01	Same as Writing 00.
	10	Uses TIOB14_1 at the input pin of BT ch.14 TIOB.
	11	Uses TIOB14_2 at the input pin of BT ch.14 TIOB.

[bit19:18] TIOA14E: TIOA14 Output Select bits

Selects output for TIOA14.

Process		Description
Reading		Reads out the register value.
Writing	00	Does not produce the output of the BT ch.14 TIOA. [Initial value]
	01	Uses TIOA14_0 at the output pin of BT ch.14 TIOA.
	10	Uses TIOA14_1 at the output pin of BT ch.14 TIOA.
	11	Uses TIOA14_2 at the output pin of BT ch.14 TIOA.

[bit17:14] Reserved: Reserved bits

"0b0000" is read out from these bits.

When writing these bits, set them to "0b0000".

[bit13:12] TIOB13S: TIOB13 Input Select bits

Selects input for TIOB13.

Process		Description
Reading		Reads out the register value.
Writing	00	Uses TIOB13_0 at the input pin of BT ch.13 TIOB. [Initial value]
	01	Same as Writing 00.
	10	Uses TIOB13_1 at the input pin of BT ch.13 TIOB.
	11	Uses TIOB13_2 at the input pin of BT ch.13 TIOB.

[bit11:10] TIOA13E: TIOA13 Output Select bits

Selects output for TIOA13.

Process		Description
Reading		Reads out the register value.
Writing	00	Does not produce the output of the BT ch.13 TIOA. [Initial value]
	01	Uses TIOA13_0 at the output pin of BT ch.13 TIOA.
	10	Uses TIOA13_1 at the output pin of BT ch.13 TIOA.
	11	Uses TIOA13_2 at the output pin of BT ch.13 TIOA.

[bit9:8] TIOA13S: TIOA13 Input Select bits

Selects input for TIOA13.

Process		Description
Reading		Reads out the register value.
Writing	00	Uses TIOA13_0 at the input pin of BT ch.13 TIOA. [Initial value]
	01	Same as Writing 00.
	10	Uses TIOA13_1 at the input pin of BT ch.13 TIOA.
	11	Uses TIOA13_2 at the input pin of BT ch.13 TIOA.

[bit7:6] Reserved: Reserved bits

"0b00" is read out from these bits.

When writing these bits, set them to "0b00".

[bit5:4] TIOB12S: TIOB12 Input Select bits

Selects input for TIOB12.

Process		Description
Reading		Reads out the register value.
Writing	00	Uses TIOB12_0 at the input pin of BT ch.12 TIOB. [Initial value]
	01	Same as Writing 00.
	10	Uses TIOB12_1 at the input pin of BT ch.12 TIOB.
	11	Uses TIOB12_2 at the input pin of BT ch.12 TIOB.

[bit3:2] TIOA12E: TIOA12 Output Select bits

Selects output for TIOA12.

Process		Description
Reading		Reads out the register value.
Writing	00	Does not produce the output of the BT ch.12 TIOA. [Initial value]
	01	Uses TIOA12_0 at the output pin of BT ch.12 TIOA.
	10	Uses TIOA12_1 at the output pin of BT ch.12 TIOA.
	11	Uses TIOA12_2 at the output pin of BT ch.12 TIOA.

[bit1:0] Reserved: Reserved bits

"0b00" is read out from these bits.

When writing these bits, set them to "0b00".

<Notes>

- TIOA
  Even channels are for output only.
  Odd channels are for both input and output.
- TIOB
  Input only.
- TIOA9, TIOA11, TIOA13, TIOA15 (odd number of "A") are not bidirectional pins so that choose either input pin or output pin for them.
  When output is chosen for odd TIOA channel, input setting will be ignored.

  Example1 : Use TIOA11 as an output pin:
  When TIOA11 is output to TIOA11_0, select EPFR12:TIOA11E = 01.
  When TIOA11 is output to TIOA11_1, select EPFR12:TIOA11E = 10.
  When TIOA11 is output to TIOA11_2, select EPFR12:TIOA11E = 11.
  Settings for EPFR12:TIOA11S will be ignored.
  Select ADE=0, PFR=1 for selected pins (DDR will be ignored).
  All the output of other peripheral function pins which are also used by selected pins must be OFF.

  Example2 : When TIOA11 is used as an input pin:
  Select EPFR12:TIOA11E = 00.
  When TIOA11 is input from TIOA11_0, select EPFR12:TIOA11S = 00 or 01.
  When TIOA11 is input from TIOA11_1, select EPFR12:TIOA11S = 10.
  When TIOA11 is input from TIOA11_2, select EPFR12:TIOA11S = 11.
  Select ADE=0, PFR=1 for selected pins (DDR will be ignored).
  All the output of other peripheral function pins which are also used by selected pins must be OFF.

  * When a pin is set to input, the output of the pin which is also used by selected pins (GPIO, other peripheral function pins) can be input to the base timer as Feedback with a setting not described above.

- This register is not initialized by deep standby transition reset.

4.22. Extended Pin Function Setting Register 14 (EPFR14)

EPFR14 register sets the function assignment to QPRC/Ethernet pins.
For product TYPEs supporting this register, see Table 4-2 and Table 4-3.

■ Register Configuration

bit	31	30	29	28	27	26	25	24
Field	CEC1B	CEC0B	E_SPLC		E_PSE	E_CKE	E_MD1B	E_MD0B
Attribute	R/W	R/W	R/W		R/W	R/W	R/W	R/W
Initial value	0	0	00		0	0	0	0

bit	23	22	21	20	19	18	17	16
Field	E_MC1B	E_MC0E	E_TE1E	E_TE0E	E_TD1E	E_TD0E	Reserved	
Attribute	R/W	R/W	R/W	R/W	R/W	R/W	-	
Initial value	0	0	0	0	0	0	-	

bit	15	14	13	12	11	10	9	8
Field	Reserved							
Attribute	-							
Initial value	-							

bit	7	6	5	4	3	2	1	0
Field	Reserved		QZIN2S		QBIN2S		QAIN2S	
Attribute	-		R/W		R/W		R/W	
Initial value	-		00		00		00	

■ Register Function

[bit31] CEC1B : CEC1 Input/Output Select bit

For TYPE6 and TYPE7 products, it selects I/O for I/O pin CEC1 of HDMI-CEC/Remote Control Reception ch.1. For products other than TYPE6 and TYPE7 products, with CECR1B[1:0] bits of Extended Pin Function Setting Register 18(EPFR18), select I/O.

Process		Description
Reading		Reads out the register value.
Writing	0	HDMI-CEC/remote control reception ch.1 is not input/output. [Initial value]
	1	HDMI-CEC/remote control reception ch.1 is input/output.

[bit30] CEC0B : CEC0 Input/Output Select bit

For TYPE6 and TYPE7 products, it selects I/O for I/O pin CEC0 of HDMI-CEC/Remote Control Reception ch.0. For products other than TYPE6 and TYPE7 products, with CECR0B[1:0] bits of Extended Pin Function Setting Register 18(EPFR18), select I/O.

Process		Description
Reading		Reads out the register value.
Writing	0	HDMI-CEC/remote control reception ch.0 is not input/output. [Initial value]
	1	HDMI-CEC/remote control reception ch.0 is input/output.

[bit29:28] E_SPLC: Input cutoff Select bit in Standby of input Pin for Ethernet

It selects input interruption in standby of the Ethernet input pin.

Process		Description
Reading		Reads out the register value.
Writing	00	All input pins are cut off in standby. [Initial value]
	01	Input pins used by MII ch.0 are not cut off in standby.
	10	Input pins used by RMII ch.0 are not cut off in standby.
	11	Input pins used by RMII ch.1 are not cut off in standby.

[bit27] E_PSE: PPS0_PPS1 Output Select bit for Ethernet

Selects output for PPS0_PPS1.

Process		Description
Reading		Reads out the register value.
Writing	0	E_PPS0_PPS1 is not output. [Initial value]
	1	E_PPS0_PPS1 is output. [Initial value]

[bit26] E_CKE: E_COUT Output Select bit

Selects output for E_COUT.

Process		Description
Reading		Reads out the register value.
Writing	0	E_COUT is not output. [Initial value]
	1	E_COUT is output.

[bit25] E_MD1B :E_MDO1 I/O Select bit

Selects I/O for E_MDO1.

Process		Description
Reading		Reads out the register value.
Writing	0	E_MDO1 is not output. [Initial value] Input of E_MDI1 is connected to the pin.
	1	E_MDO1 is output. Input of E_MDI1 is connected to the pin.

[bit24] E_MD0B :E_MDO0 I/O Select bit

Selects I/O for E_MDC0.

Process		Description
Reading		Reads out the register value.
Writing	0	E_MDC0 is not output. [Initial value] Input of E_MDI0 is connected to the pin.
	1	E_MDC0 is output. Input of E_MDI0 is connected to the pin.

[bit23] E_MC1B :E_MDC1 I/O Select bit

Selects I/O for E_MDC1.

Process		Description
Reading		Reads out the register value.
Writing	0	E_MDC1 is not output. [Initial value] Input of E_TCK0 is connected to the pin.
	1	E_MDC1 is output. Input of E_TCK0 is connected to the pin.

[bit22] E_MC0E :E_MDC0 Output Select bit

Selects output for E_MDC0.

Process		Description
Reading		Reads out the register value.
Writing	0	E_MDC0 is not output. [Initial value]
	1	E_MDC0 is output.

[bit21] E_TE1E: E_TXER0_TXEN1 Output Select bit

Selects output for E_TXER0_TXEN1.

Process		Description
Reading		Reads out the register value.
Writing	0	E_TXER0_TXEN1 is not output. [Initial value]
	1	E_TXER0_TXEN1 is output.

[bit20] E_TE0E: E_TXEN0 Output Select bit

Selects output for E_TXEN0.

Process		Description
Reading		Reads out the register value.
Writing	0	E_TXEN0 is not output. [Initial value]
	1	E_TXEN0 is output.

[bit19] E_TD1E: E_TX02_TX10, E_TX03_TX11 Output Select bit

Selects output for E_TX02_TX10, E_TX03_TX11.

Process		Description
Reading		Reads out the register value.
Writing	0	E_TX02_TX10 is not output. [Initial value] E_TX03_TX11 is not output.
	1	E_TX02_TX10 is output. [Initial value] E_TX03_TX11 is output.

[bit18] E_TD0E: E_TX00, E_TX01 Output Select bit

Selects output for E_TX00, E_TX01.

Process		Description
Reading		Reads out the register value.
Writing	0	E_TX00, E_TX01 is not output. [Initial value]
	1	E_TX00, E_TX00 is output.

[bit17:6] Reserved: Reserved bits

"0b000000000000" is read out from these bits.

When writing these bits, set them to "0b000000000000".

[bit5:4] QZIN2S: QPRC-ch.2 ZIN Input Pin bits

Selects input for QPRC-ch.2 as ZIN.

Process		Description
Reading		Reads out the register value.
Writing	00	ZIN2_0 is used as ZIN, the input pin of QPRC ch.2. [Initial value]
	01	ZIN2_0 is used as ZIN, the input pin of QPRC ch.2.
	10	ZIN2_1 is used as ZIN, the input pin of QPRC ch.2.
	11	ZIN2_2 is used as ZIN, the input pin of QPRC ch.2.

[bit3:2] QBIN2S: QPRC-ch.2 BIN Input Pin bits

Selects input for QPRC-ch.2 as BIN.

Process		Description
Reading		Reads out the register value.
Writing	00	BIN2_0 is used as BIN, the input pin of QPRC ch.2. [Initial value]
	01	BIN2_0 is used as BIN, the input pin of QPRC ch.2.
	10	BIN2_1 is used as BIN, the input pin of QPRC ch.2.
	11	BIN2_2 is used as BIN, the input pin of QPRC ch.2.

[bit1:0] QAIN2S: QPRC-ch.2 AIN Input Pin bits

Selects input for QPRC-ch.2 as AIN.

Process		Description
Reading		Reads out the register value.
Writing	00	AIN2_0 is used as AIN, the input pin of QPRC ch.2. [Initial value]
	01	AIN2_0 is used as AIN, the input pin of QPRC ch.2.
	10	AIN2_1 is used as AIN, the input pin of QPRC ch.2.
	11	AIN2_2 is used as AIN, the input pin of QPRC ch.2.

<Note>

This register is not initialized by deep standby transition reset.

4.23. Extended Pin Function Setting Register 15 (EPFR15)

EPFR15 register sets the function assignment to external interrupt pins. For product TYPEs supporting this register, see Table 4-2 and Table 4-3.

■ Register Configuration

bit	31 30	29 28	27 26	25 24
Field	EINT31S	EINT30S	EINT29S	EINT28S
Attribute	R/W	R/W	R/W	R/W
Initial value	00	00	00	00

bit	23 22	21 20	19 18	17 16
Field	EINT27S	EINT26S	EINT25S	EINT24S
Attribute	R/W	R/W	R/W	R/W
Initial value	00	00	00	00

bit	15 14	13 12	11 10	9 8
Field	EINT23S	EINT22S	EINT21S	EINT20S
Attribute	R/W	R/W	R/W	R/W
Initial value	00	00	00	00

bit	7 6	5 4	3 2	1 0
Field	EINT19S	EINT18S	EINT17S	EINT16S
Attribute	R/W	R/W	R/W	R/W
Initial value	00	00	00	00

■ Register Function

[bit31:30] EINT31S: External Interrupt Input Select bits

Selects input for EINT31.

Process		Description
Reading		Reads out the register value.
Writing	00	Uses INT31_0 at the input pin of EINT ch.31. [Initial value]
	01	Same as Writing 00.
	10	Uses INT31_1 at the input pin of EINT ch.31.
	11	Uses INT31_2 at the input pin of EINT ch.31.

[bit29:28] EINT30S: External Interrupt Input Select bits

Selects input for EINT30.

Process		Description
Reading		Reads out the register value.
Writing	00	Uses INT30_0 at the input pin of EINT ch.30. [Initial value]
	01	Same as Writing 00.
	10	Uses INT30_1 at the input pin of EINT ch.30.
	11	Uses INT30_2 at the input pin of EINT ch.30.

[bit27:26] EINT29S: External Interrupt Input Select bits

Selects input for EINT29.

Process		Description
Reading		Reads out the register value.
Writing	00	Uses INT29_0 at the input pin of EINT ch.29. [Initial value]
	01	Same as Writing 00.
	10	Uses INT29_1 at the input pin of EINT ch.29.
	11	Uses INT29_2 at the input pin of EINT ch.29.

[bit25:24] EINT28S: External Interrupt Input Select bits

Selects input for EINT28.

Process		Description
Reading		Reads out the register value.
Writing	00	Uses INT28_0 at the input pin of EINT ch.28. [Initial value]
	01	Same as Writing 00.
	10	Uses INT28_1 at the input pin of EINT ch.28.
	11	Uses INT28_2 at the input pin of EINT ch.28.

[bit23:22] EINT27S: External Interrupt Input Select bits

Selects input for EINT27.

Process		Description
Reading		Reads out the register value.
Writing	00	Uses INT27_0 at the input pin of EINT ch.27. [Initial value]
	01	Same as Writing 00.
	10	Uses INT27_1 at the input pin of EINT ch.27.
	11	Uses INT27_2 at the input pin of EINT ch.27.

[bit21:20] EINT26S: External Interrupt Input Select bits

Selects input for EINT26.

Process		Description
Reading		Reads out the register value.
Writing	00	Uses INT26_0 at the input pin of EINT ch.26. [Initial value]
	01	Same as Writing 00.
	10	Uses INT26_1 at the input pin of EINT ch.26.
	11	Uses INT26_2 at the input pin of EINT ch.26.

[bit19:18] EINT25S: External Interrupt Input Select bits

Selects input for EINT25.

Process		Description
Reading		Reads out the register value.
Writing	00	Uses INT25_0 at the input pin of EINT ch.25. [Initial value]
	01	Same as Writing 00.
	10	Uses INT25_1 at the input pin of EINT ch.25.
	11	Uses INT25_2 at the input pin of EINT ch.25.

[bit17:16] EINT24S: External Interrupt Input Select bits

Selects input for EINT24.

Process		Description
Reading		Reads out the register value.
Writing	00	Uses INT24_0 at the input pin of EINT ch.24. [Initial value]
	01	Same as Writing 00.
	10	Uses INT24_1 at the input pin of EINT ch.24.
	11	Uses INT24_2 at the input pin of EINT ch.24.

[bit15:14] EINT23S: External Interrupt Input Select bits

Selects input for EINT23.

Process		Description
Reading		Reads out the register value.
Writing	00	Uses INT23_0 at the input pin of EINT ch.23. [Initial value]
	01	Same as Writing 00.
	10	Uses INT23_1 at the input pin of EINT ch.23.
	11	Uses INT23_2 at the input pin of EINT ch.23.

[bit13:12] EINT22S: External Interrupt Input Select bits

Selects input for EINT22.

Process		Description
Reading		Reads out the register value.
Writing	00	Uses INT22_0 at the input pin of EINT ch.22. [Initial value]
	01	Same as Writing 00.
	10	Uses INT22_1 at the input pin of EINT ch.22.
	11	Uses INT22_2 at the input pin of EINT ch.22.

[bit11:10] EINT21S: External Interrupt Input Select bits

Selects input for EINT21.

Process		Description
Reading		Reads out the register value.
Writing	00	Uses INT21_0 at the input pin of EINT ch.21. [Initial value]
	01	Same as Writing 00.
	10	Uses INT21_1 at the input pin of EINT ch.21.
	11	Uses INT21_2 at the input pin of EINT ch.21.

[bit9:8] EINT20S: External Interrupt Input Select bits

Selects input for EINT20.

Process		Description
Reading		Reads out the register value.
Writing	00	Uses INT20_0 at the input pin of EINT ch.20. [Initial value]
	01	Same as Writing 00.
	10	Uses INT20_1 at the input pin of EINT ch.20.
	11	Uses INT20_2 at the input pin of EINT ch.20.

[bit7:6] EINT19S: External Interrupt Input Select bits

Selects input for EINT19.

Process		Description
Reading		Reads out the register value.
Writing	00	Uses INT19_0 at the input pin of EINT ch.19. [Initial value]
	01	Same as Writing 00.
	10	Uses INT19_1 at the input pin of EINT ch.19.
	11	Uses INT19_2 at the input pin of EINT ch.19.

[bit5:4] EINT18S: External Interrupt Input Select bits

Selects input for EINT18.

Process		Description
Reading		Reads out the register value.
Writing	00	Uses INT18_0 at the input pin of EINT ch.18. [Initial value]
	01	Same as Writing 00.
	10	Uses INT18_1 at the input pin of EINT ch.18.
	11	Uses INT18_2 at the input pin of EINT ch.18.

[bit3:2] EINT17S: External Interrupt Input Select bits

Selects input for EINT17.

Process		Description
Reading		Reads out the register value.
Writing	00	Uses INT17_0 at the input pin of EINT ch.17. [Initial value]
	01	Same as Writing 00.
	10	Uses INT17_1 at the input pin of EINT ch.17.
	11	Uses INT17_2 at the input pin of EINT ch.17.

[bit1:0] EINT16S: External Interrupt Input Select bits

Selects input for EINT16.

Process		Description
Reading		Reads out the register value.
Writing	00	Uses INT16_0 at the input pin of EINT ch.16. [Initial value]
	01	Same as Writing 00.
	10	Uses INT16_1 at the input pin of EINT ch.16.
	11	Uses INT16_2 at the input pin of EINT ch.16.

<Notes>

- This register is not initialized by deep standby transition reset.

4.24. Extended Pin Function Setting Register 16 (EPFR16)

The EPFR08 register assigns functions of multi-function serial channel 8, channel 9, channel 10, and channel 11. For product TYPEs supporting this register, see Table 4-2 and Table 4-3.

■ Register Configuration

bit	31	30	29	28	27	26	25	24
Field	Reserved				SCK11B		SOT11B	
Attribute	-				R/W		R/W	
Initial value	-				00		00	

bit	23	22	21	20	19	18	17	16
Field	SIN11S		SCK10B		SOT10B		SIN10S	
Attribute	R/W		R/W		R/W		R/W	
Initial value	00		00		00		00	

bit	15	14	13	12	11	10	9	8
Field	SCK9B		SOT9B		SIN9S		SCK8B	
Attribute	R/W		R/W		R/W		R/W	
Initial value	00		00		00		00	

bit	7	6	5	4	3	2	1	0
Field	SOT8B		SIN8S		Reserved			
Attribute	R/W		R/W		-			
Initial value	00		00		-			

■ Register Function

[bit31:28] Reserved: Reserved bits

"0b0000" is read from these bits.

When writing these bits, set them to "0b0000".

[bit27:26] SCK11B: SCK11 Input/Output Select bits

Selects input/output for SCK11.

Process		Description
Reading		Reads out the register value.
Writing	00	Uses SCK11_0 at the input pin of MFS ch.11 SCK. Does not produce output. [Initial value]
	01	Uses SCK11_0 at the input pin of MFS ch.11 SCK. Uses SCK11_0 at the output pin.
	10	Uses SCK11_1 at the input pin of MFS ch.11 SCK. Uses SCK11_1 at the output pin.
	11	Uses SCK11_2 at the input pin of MFS ch.11 SCK. Uses SCK11_2 at the output pin.

[bit25:24] SOT11B: SOT11 Input/Output Select bits

Selects input/output for SOT11.

Process		Description
Reading		Reads out the register value.
Writing	00	Uses SOT11_0 at the input pin of MFS ch.11 SOT. Does not produce output. [Initial value]
	01	Uses SOT11_0 at the input pin of MFS ch.11 SOT. Uses SOT11_0 at the output pin.
	10	Uses SOT11_1 at the input pin of MFS ch.11 SOT. Uses SOT11_1 at the output pin.
	11	Uses SOT11_2 at the input pin of MFS ch.11 SOT. Uses SOT11_2 at the output pin.

[bit23:22] SIN11S: SIN11 Input Select bits

Selects input for SIN11.

Process		Description
Reading		Reads out the register value.
Writing	00	Uses SIN11_0 at the input pin of MFS ch.11 SIN. [Initial value]
	01	Same as Writing 00.
	10	Uses SIN11_1 at the input pin of MFS ch.11 SIN.
	11	Uses SIN11_2 at the input pin of MFS ch.11 SIN.

[bit21:20] SCK10B: SCK10 Input/Output Select bits

Selects input/output for SCK10.

Process		Description
Reading		Reads out the register value.
Writing	00	Uses SCK10_0 at the input pin of MFS ch.10 SCK. Does not produce output. [Initial value]
	01	Uses SCK10_0 at the input pin of MFS ch.10 SCK. Uses SCK10_0 at the output pin.
	10	Uses SCK10_1 at the input pin of MFS ch.10 SCK. Uses SCK10_1 at the output pin.
	11	Uses SCK10_2 at the input pin of MFS ch.10 SCK. Uses SCK10_2 at the output pin.

[bit19:18] SOT10B: SOT10 Input/Output Select bits

Selects input/output for SOT10.

Process		Description
Reading		Reads out the register value.
Writing	00	Uses SOT10_0 at the input pin of MFS ch.10 SOT. Does not produce output. [Initial value]
	01	Uses SOT10_0 at the input pin of MFS ch.10 SOT. Uses SOT10_0 at the output pin.
	10	Uses SOT10_1 at the input pin of MFS ch.10 SOT. Uses SOT10_1 at the output pin.
	11	Uses SOT10_2 at the input pin of MFS ch.10 SOT. Uses SOT10_2 at the output pin.

[bit17:16] SIN10S: SIN10 Input Select bits

Selects input for SIN10.

Process		Description
Reading		Reads out the register value.
Writing	00	Uses SIN10_0 at the input pin of MFS ch.10 SIN. [Initial value]
	01	Same as Writing 00.
	10	Uses SIN10_1 at the input pin of MFS ch.10 SIN.
	11	Uses SIN10_2 at the input pin of MFS ch.10 SIN.

[bit15:14] SCK9B: SCK9 Input/Output Select bits

Selects input/output for SCK9.

Process		Description
Reading		Reads out the register value.
Writing	00	Uses SCK9_0 at the input pin of MFS ch.9 SCK. Does not produce output. [Initial value]
	01	Uses SCK9_0 at the input pin of MFS ch.9 SCK. Uses SCK9_0 at the output pin.
	10	Uses SCK9_1 at the input pin of MFS ch.9 SCK. Uses SCK9_1 at the output pin.
	11	Uses SCK9_2 at the input pin of MFS ch.9 SCK. Uses SCK9_2 at the output pin.

[bit13:12] SOT9B: SOT9 Input/Output Select bits

Selects input/output for SOT9.

Process		Description
Reading		Reads out the register value.
Writing	00	Uses SOT9_0 at the input pin of MFS ch.9 SOT. Does not produce output. [Initial value]
	01	Uses SOT9_0 at the input pin of MFS ch.9 SOT. Uses SOT9_0 at the output pin.
	10	Uses SOT9_1 at the input pin of MFS ch.9 SOT. Uses SOT9_1 at the output pin.
	11	Uses SOT9_2 at the input pin of MFS ch.9 SOT. Uses SOT9_2 at the output pin.

[bit11:10] SIN9S: SIN9 Input Select bits

Selects input for SIN9.

Process		Description
Reading		Reads out the register value.
Writing	00	Uses SIN9_0 at the input pin of MFS ch.9 SIN. [Initial value]
	01	Same as Writing 00.
	10	Uses SIN9_1 at the input pin of MFS ch.9 SIN.
	11	Uses SIN9_2 at the input pin of MFS ch.9 SIN.

[bit9:8] SCK8B: SCK8 Input/Output Select bits

Selects input/output for SCK8.

Process		Description
Reading		Reads out the register value.
Writing	00	Uses SCK8_0 at the input pin of MFS ch.8 SCK. Does not produce output. [Initial value]
	01	Uses SCK8_0 at the input pin of MFS ch.8 SCK. Uses SCK8_0 at the output pin.
	10	Uses SCK8_1 at the input pin of MFS ch.8 SCK. Uses SCK8_1 at the output pin.
	11	Uses SCK8_2 at the input pin of MFS ch.8 SCK. Uses SCK8_2 at the output pin.

[bit7:6] SOT8B: SOT8 Input/Output Select bits

Selects input/output for SOT8.

Process		Description
Reading		Reads out the register value.
Writing	00	Uses SOT8_0 at the input pin of MFS ch.8 SOT. Does not produce output. [Initial value]
	01	Uses SOT8_0 at the input pin of MFS ch.8 SOT. Uses SOT8_0 at the output pin.
	10	Uses SOT8_1 at the input pin of MFS ch.8 SOT. Uses SOT8_1 at the output pin.
	11	Uses SOT8_2 at the input pin of MFS ch.8 SOT. Uses SOT8_2 at the output pin.

[bit5:4] SIN8S: SIN8 Input Select bits

Selects input for SIN4.

Process		Description
Reading		Reads out the register value.
Writing	00	Uses SIN8_0 at the input pin of MFS ch.8 SIN. [Initial value]
	01	Same as Writing 00.
	10	Uses SIN8_1 at the input pin of MFS ch.8 SIN.
	11	Uses SIN8_2 at the input pin of MFS ch.8 SIN.

[bit3:0] Reserved: Reserved bits

"0b0000" is read from these bits.

When writing these bits, set them to "0b0000".

<Note>

- This register is not initialized by deep standby transition reset.

4.25. Extended Pin Function Setting Register 17 (EPFR17)

The EPFR08 register assigns functions of multi-function serial channel 12, channel 13, channel 14, and channel 15. For product TYPEs supporting this register, see Table 4-2 and Table 4-3.

■ Register Configuration

bit	31	30	29	28	27	26	25	24
Field	Reserved				SCK15B		SOT15B	
Attribute	-				R/W		R/W	
Initial value	-				00		00	

bit	23	22	21	20	19	18	17	16
Field	SIN15S		SCK14B		SOT14B		SIN14S	
Attribute	R/W		R/W		R/W		R/W	
Initial value	00		00		00		00	

bit	15	14	13	12	11	10	9	8
Field	SCK13B		SOT13B		SIN13S		SCK12B	
Attribute	R/W		R/W		R/W		R/W	
Initial value	00		00		00		00	

Bit	7	6	5	4	3	2	1	0
Field	SOT12B		SIN12S		Reserved			
Attribute	R/W		R/W		-			
Initial value	00		00		-			

■ Register Function

[bit31:28] Reserved: Reserved bits

"0b0000" is read from these bits.

When writing these bits, set them to "0b0000".

[bit27:26] SCK15B: SCK15 Input/Output Select bits

Selects input/output for SCK15.

Process		Description
Reading		Reads out the register value.
Writing	00	Uses SCK15_0 at the input pin of MFS ch.15 SCK. Does not produce output. [Initial value]
	01	Uses SCK15_0 at the input pin of MFS ch.15 SCK. Uses SCK15_0 at the output pin.
	10	Uses SCK15_1 at the input pin of MFS ch.15 SCK. Uses SCK15_1 at the output pin.
	11	Uses SCK15_2 at the input pin of MFS ch.15 SCK. Uses SCK15_2 at the output pin.

[bit25:24] SOT15B: SOT15 Input/Output Select bits

Selects input/output for SOT15.

Process		Description
Reading		Reads out the register value.
Writing	00	Uses SOT15_0 at the input pin of MFS ch.15 SOT. Does not produce output. [Initial value]
	01	Uses SOT15_0 at the input pin of MFS ch.15 SOT. Uses SOT15_0 at the output pin.
	10	Uses SOT15_1 at the input pin of MFS ch.15 SOT. Uses SOT15_1 at the output pin.
	11	Uses SOT15_2 at the input pin of MFS ch.15 SOT. Uses SOT15_2 at the output pin.

[bit23:22] SIN15S: SIN15 Input Select bits

Selects input for SIN15.

Process		Description
Reading		Reads out the register value.
Writing	00	Uses SIN15_0 at the input pin of MFS ch.15 SIN. [Initial value]
	01	Same as Writing 00.
	10	Uses SIN15_1 at the input pin of MFS ch.15 SIN.
	11	Uses SIN15_2 at the input pin of MFS ch.15 SIN.

[bit21:20] SCK14B: SCK14 Input/Output Select bits

Selects input/output for SCK14.

Process		Description
Reading		Reads out the register value.
Writing	00	Uses SCK14_0 at the input pin of MFS ch.14 SCK. Does not produce output. [Initial value]
	01	Uses SCK14_0 at the input pin of MFS ch.14 SCK. Uses SCK14_0 at the output pin.
	10	Uses SCK14_1 at the input pin of MFS ch.14 SCK. Uses SCK14_1 at the output pin.
	11	Uses SCK14_2 at the input pin of MFS ch.14 SCK. Uses SCK14_2 at the output pin.

[bit19:18] SOT14B: SOT14 Input/Output Select bits

Selects input/output for SOT14.

Process		Description
Reading		Reads out the register value.
Writing	00	Uses SOT14_0 at the input pin of MFS ch.14 SOT. Does not produce output. [Initial value]
	01	Uses SOT14_0 at the input pin of MFS ch.14 SOT. Uses SOT14_0 at the output pin.
	10	Uses SOT14_1 at the input pin of MFS ch.14 SOT. Uses SOT14_1 at the output pin.
	11	Uses SOT14_2 at the input pin of MFS ch.14 SOT. Uses SOT14_2 at the output pin.

[bit17:16] SIN14S: SIN14 Input Select bits

Selects input for SIN14.

Process		Description
Reading		Reads out the register value.
Writing	00	Uses SIN14_0 at the input pin of MFS ch.14 SIN. [Initial value]
	01	Same as Writing 00.
	10	Uses SIN14_1 at the input pin of MFS ch.14 SIN.
	11	Uses SIN14_2 at the input pin of MFS ch.14 SIN.

[bit15:14] SCK13B: SCK13 Input/Output Select bits

Selects input/output for SCK13.

Process		Description
Reading		Reads out the register value.
Writing	00	Uses SCK13_0 at the input pin of MFS ch.13 SCK. Does not produce output. [Initial value]
	01	Uses SCK13_0 at the input pin of MFS ch.13 SCK. Uses SCK13_0 at the output pin.
	10	Uses SCK13_1 at the input pin of MFS ch.13 SCK. Uses SCK13_1 at the output pin.
	11	Uses SCK13_2 at the input pin of MFS ch.13 SCK. Uses SCK13_2 at the output pin.

[bit13:12] SOT13B: SOT13 Input/Output Select bits

Selects input/output for SOT13.

Process		Description
Reading		Reads out the register value.
Writing	00	Uses SOT13_0 at the input pin of MFS ch.13 SOT. Does not produce output. [Initial value]
	01	Uses SOT13_0 at the input pin of MFS ch.13 SOT. Uses SOT13_0 at the output pin.
	10	Uses SOT13_1 at the input pin of MFS ch.13 SOT. Uses SOT13_1 at the output pin.
	11	Uses SOT13_2 at the input pin of MFS ch.13 SOT. Uses SOT13_2 at the output pin.

[bit11:10] SIN13S: SIN13 Input Select bits

Selects input for SIN13.

Process		Description
Reading		Reads out the register value.
Writing	00	Uses SIN13_0 at the input pin of MFS ch.13 SIN. [Initial value]
	01	Same as Writing 00.
	10	Uses SIN13_1 at the input pin of MFS ch.13 SIN.
	11	Uses SIN13_2 at the input pin of MFS ch.13 SIN.

[bit9:8] SCK12B: SCK12 Input/Output Select bits

Selects input/output for SCK12.

Process		Description
Reading		Reads out the register value.
Writing	00	Uses SCK12_0 at the input pin of MFS ch.12 SCK. Does not produce output. [Initial value]
	01	Uses SCK12_0 at the input pin of MFS ch.12 SCK. Uses SCK12_0 at the output pin.
	10	Uses SCK12_1 at the input pin of MFS ch.12 SCK. Uses SCK12_1 at the output pin.
	11	Uses SCK12_2 at the input pin of MFS ch.12 SCK. Uses SCK12_2 at the output pin.

[bit7:6] SOT12B: SOT12 Input/Output Select bits

Selects input/output for SOT12.

Process		Description
Reading		Reads out the register value.
Writing	00	Uses SOT12_0 at the input pin of MFS ch.12 SOT. Does not produce output. [Initial value]
	01	Uses SOT12_0 at the input pin of MFS ch.12 SOT. Uses SOT12_0 at the output pin.
	10	Uses SOT12_1 at the input pin of MFS ch.12 SOT. Uses SOT12_1 at the output pin.
	11	Uses SOT12_2 at the input pin of MFS ch.12 SOT. Uses SOT12_2 at the output pin.

[bit5:4] SIN12S: SIN12 Input Select bits

Selects input for SIN12.

Process		Description
Reading		Reads out the register value.
Writing	00	Uses SIN12_0 at the input pin of MFS ch.12 SIN. [Initial value]
	01	Same as Writing 00.
	10	Uses SIN12_1 at the input pin of MFS ch.12 SIN.
		Uses SIN12_2 at the input pin of MFS ch.12 SIN.

[bit3:0] Reserved: Reserved bits

"0b0000" is read from these bits.

When writing these bits, set them to "0b0000".

<Note>

- This register is not initialized by deep standby transition reset.

4.26. Extended Pin Function Setting Register 18 (EPFR18)

The EPFR18 register assigns functions of HDMI-CEC pins. For product TYPEs supporting this register, see Table 4-2 and Table 4-3.

■ Register Configuration

bit	31	30	29	28	27	26	25	24
Field	Reserved							
Attribute	-							
Initial value	-							

bit	23	22	21	20	19	18	17	16
Field	Reserved							
Attribute	-							
Initial value	-							

bit	15	14	13	12	11	10	9	8
Field	Reserved							
Attribute	-							
Initial value	-							

bit	7	6	5	4	3	2	1	0
Field	Reserved				CECR1B		CECR0B	
Attribute	-				R/W		R/W	
Initial value	-				00		00	

■ Register Function

[bit31:4] Reserved: Reserved bits

"0x0000000" is read from these bits.

When writing these bits, set them to "0x0000000".

[bit3:2] CECR1B : CEC1 input/output selection bits

For products other than TYPE6 and TYPE7 products, it selects I/O for I/O pin CEC1 of HDMI-CEC/Remote Control Reception ch.1.

For TYPE6 and TYPE7 products, with CEC1B[31:30] bits of Extended Pin Function Setting Register 14(EPFR14), select I/O.

Process		Description
Reading		Reads out the register value.
Writing	00	HDMI-CEC/remote control reception ch.1 is not input/output. [Initial value]
	01	CEC1_0 is used, HDMI-CEC/remote control reception ch.1 is input/output.
	10	CEC1_1 is used, HDMI-CEC/remote control reception ch.1 is input/output.
	11	Setting is prohibited.

[bit1:0] CECR0B: CEC0 input/output selection bits

For products other than TYPE6 and TYPE7 products, it selects I/O for I/O pin CEC0 of HDMI-CEC/Remote Control Reception ch.0.

For TYPE6 and TYPE7 products, with CEC1B[29:28] bits of Extended Pin Function Setting Register 14(EPFR14), select I/O.

Process	Description
Reading	Reads out the register value.
Writing 00	HDMI-CEC/remote control reception ch.0 is not input/output. [Initial value]
Writing 01	CEC0_0 is used, HDMI-CEC/remote control reception ch.0 is input/output.
Writing 10	CEC0_1 is used, HDMI-CEC/remote control reception ch.0 is input/output.
Writing 11	Setting is prohibited.

<Note>

- This register is not initialized by deep standby transition reset.

4.27. Special Port Setting Register (SPSR)

The SPSR register sets a pin as a signal pin of special functions.

■ Register Configuration

bit	31	30	29	28	27	26	25	24
Field	Reserved							
Attribute	-							
Initial value	-							

bit	23	22	21	20	19	18	17	16
Field	Reserved							
Attribute	-							
Initial value	-							

bit	15	14	13	12	11	10	9	8
Field	Reserved							
Attribute	-							
Initial value	-							

bit	7	6	5	4	3	2	1	0
Field	Reserved		USB1C	USB0C	MAINXC		SUBXC	
Attribute	-		R/W	R/W	R/W		R/W	
Initial value	-		0	0	01		01	

■ Register Function

[bit31:6] Reserved: Reserved bits

"0" is read from these bits.

When writing these bits, set them to "0".

[bit5] USB1C: USB (ch.1) Pin Setting Register

This bit sets a pin as a USB pin.

Process		Description
Reading		Reads out the register value.
Writing	0	Does not use two pins of UDM1 and UDP1 as USB pins but as digital input/output pins. [Initial value]
	1	Uses two pins of UDM1 and UDP1 as USB pins. (An I/O cell will be in a state of input direction and input cut-off.)

[bit4] USB0C : USB (ch.0) Pin Setting Register

This bit sets a pin as a USB pin.

Process		Description
Reading		Reads out the register value.
Writing	0	Does not use two pins of UDM0 and UDP0 as USB pins but as digital input/output pins. [Initial value]
	1	Uses two pins of UDM0 and UDP0 as USB pins. (An I/O cell will be in a state of input direction and input cut-off.)

[bit3:2] MAINXC : Main Clock (Oscillation) Pin Setting Register

This bits sets a pin as a main clock (oscillation) pin.

TYPE0/1/2/4/5 products

Process		Description
Reading		Reads out the register value.
Writing	00	Does not use two pins of X0 and X1 as main clock (oscillation) pins but as digital input/output pins.
	01	Use two pins of X0 and X1 as main clock (oscillation) pins / external clock input pins. [Initial value] (An I/O cell will be in a state of input direction, input cut-off, and pull-up disconnection.)
	10	Setting is prohibited.
	11	Setting is prohibited.

TYPE3/7 products

Process		Description
Reading		Reads out the register value.
Writing	00	Does not use two pins of X0 and X1 as main clock (oscillation) pins but as digital input/output pins / external input pins*.
	01	Use two pins of X0 and X1 as main clock (oscillation) pins. [Initial value] (An I/O cell will be in a state of input direction, input cut-off, and pull-up disconnection.)
	10	Setting is prohibited.
	11	Setting is prohibited.

*: In the case of using as external clock pins, set to “0” the bit of DDRx register corresponding to the GPIO that is shared with the X0 pin. X1 pin can be used as digital input/output pin.

TYPE6/8 to 12 products

Process		Description
Reading		Reads out the register value.
Writing	00	Does not use two pins of X0 and X1 as main clock (oscillation) pins but as digital input/output pins.
	01	Use two pins of X0 and X1 as main clock (oscillation) pins. [Initial value] (An I/O cell will be in a state of input direction, input cut-off, and pull-up disconnection.)
	10	Setting is prohibited.
	11	Use X0 pin as external clock input pin. Use X1 pin as digital input/output pin.

[bit1:0] SUBXC : Sub Clock (Oscillation) Pin Setting Register

This bit sets a pin as a sub clock (oscillation) pin.

TYPE0/1/2/4/5 products

Process		Description
Reading		Reads out the register value.
Writing	00	Does not use two pins of X0A and X1A as sub clock (oscillation) pins but as digital input/output pins / external clock input pins.
	01	Use two pins of X0A and X1A as sub clock (oscillation) pins. [Initial value] (An I/O cell will be in a state of input direction, input cut-off, and pull-up disconnection.)
	10	Setting is prohibited.
	11	Setting is prohibited.

TYPE3/7 products

Process		Description
Reading		Reads out the register value.
Writing	00	Does not use two pins of X0A and X1A as sub clock (oscillation) pins but as digital input/output pins / external input pins*.
	01	Use two pins of X0A and X1A as sub clock (oscillation) pins. [Initial value] (An I/O cell will be in a state of input direction, input cut-off, and pull-up disconnection.)
	10	Setting is prohibited.
	11	Setting is prohibited.

*: In the case of using as external clock pins, set to “0” the bit of DDRx register corresponding to the GPIO that is shared with the X0A pin. X1A pin can be used as digital input/output pin.

TYPE6/8 to 12 products

Process		Description
Reading		Reads out the register value.
Writing	00	Does not use two pins of X0A and X1A as sub clock (oscillation) pins but as digital input/output pins.
	01	Use two pins of X0A and X1A as sub clock (oscillation) pins. [Initial value] (An I/O cell will be in a state of input direction, input cut-off, and pull-up disconnection.)
	10	Setting is prohibited.
	11	Use X0A pin as external clock input pin. Use X1A pin as digital input/output pin.

<Notes>

- Only writing "01" to the MAINXC bit does not make a main clock start oscillation.
  To start oscillation, enable oscillation by the MOSCE bit of the System Clock Mode Control Register (SCM_CTL), which is described in the chapter "Clock", after writing "01" to the MAINXC bit.
- Only writing "01" to the SUBXC bit does not make a sub clock start oscillation.
  To start oscillation, enable oscillation by the SOSCE bit of the System Clock Mode Control Register (SCM_CTL), which is described in the chapter "Clock", after writing "01" to the SUBXC bit.
- When using the external clock in TYPE3 and TYPE7 products, set MAINXC bit and SUBXC bit to "01" and set the DDRx bit of the corresponding pin to "0".
- This register is not initialized by deep standby transition reset.

4.28. Port Pseudo Open Drain Setting Register (PZRx)

PZRx register makes I/O port Hi-Z when output is High level and sets pseudo open drain control.

■ List of PZR register configuration

bit 31 16	15 0	Initial value	Attribute
Reserved	PZR0	0x0000	R/W
Reserved	PZR1	0x0000	R/W
Reserved	PZR2	0x0000	R/W
Reserved	PZR3	0x0000	R/W
Reserved	PZR4	0x0000	R/W
Reserved	PZR5	0x0000	R/W
Reserved	PZR6	0x0000	R/W
Reserved	PZR7	0x0000	R/W
Reserved	PZR8	0x0000	R/W
Reserved	PZR9	0x0000	R/W
Reserved	PZRA	0x0000	R/W
Reserved	PZRB	0x0000	R/W
Reserved	PZRC	0x0000	R/W
Reserved	PZRD	0x0000	R/W
Reserved	PZRE	0x0000	R/W
Reserved	PZRF	0x0000	R/W

■ Details of Register Configuration

bit	31 16	15 0
Field	Reserved	PZRx

■ Register Function

[bit31:16] Reserved: Reserved bits

"0x0000" is read from these bits.

When writing these bits, set them to "0x0000".

[bit15:0] PZRx: Port Pseudo Open Drain Setting Register x

Sets the pseudo open drain of the pin.

Process		Description
Reading		Reads out the register value.
Writing	0	Set the pin to High level when outputting digital High level by GPIO or peripheral macro.
	1	Set the pin to Hi-Z when outputting digital High level by GPIO or peripheral macro. Disconnect the pull-up resistor regardless of the PCR setting.

<Notes>

- The "x" description of PZRx is wildcard. It shows PZR0, PZR1, PZR2, and so on.
- The function of the PZR register is implemented only in some specific pins.
  Only pins described as "PZR register control is enabled" in remarks column of "I/O circuit type" of Data Sheet can control open drain.

- PZR register does not exist in all pins. However, even the pins that do not have PZR registers can control pseudo open drain by the setting of DDR register if they are used as GPIO.
  In such a case, after setting PFR = 0 (GPIO setting) and PDOR = 0,
  When setting L output: used as DDR = 1 (output direction).
  When setting Hi-Z output: used as DDR = 0 (input direction).

However, in open drain by the GPIO setting, you cannot apply voltage that exceeds VCC at Hi-Z.

This register is not initialized by deep standby transition reset.

5. Usage Precautions

This section describes precautions for using the I/O port.

● ON/OFF of the Pull-up Resistance When SPL=1

SPL is a signal for turning a pin into Hi-Z state during standby mode.

- When SPL=0 Normal operations
- When SPL=1 Pin Hi-Z, input cut-off, pull-up disconnection
  However, the SPL bit cannot be used for setting external interrupts, NMIX, JTAG, or TRACE pins.

For details of the SPL bit, see Chapter "Low Power Consumption Mode".

● DTTIX Input

DTTI input is an input signal for switching the dual-purpose motor control PWM output (RTO) setting output pin to its other GPIO pin setting to address a motor stop demand in an emergency.
To use this function, enable switching by EPFR.

● Procedures for Switching Pin Functions

When switching the outputs for peripheral functions using the EPFR register, to prevent pin uncertain output (Hi-Z), switch settings according to the procedures similar to the switching example shown in the following Figure 5-1.

Figure 5-1 Procedures for Switching Pin Functions

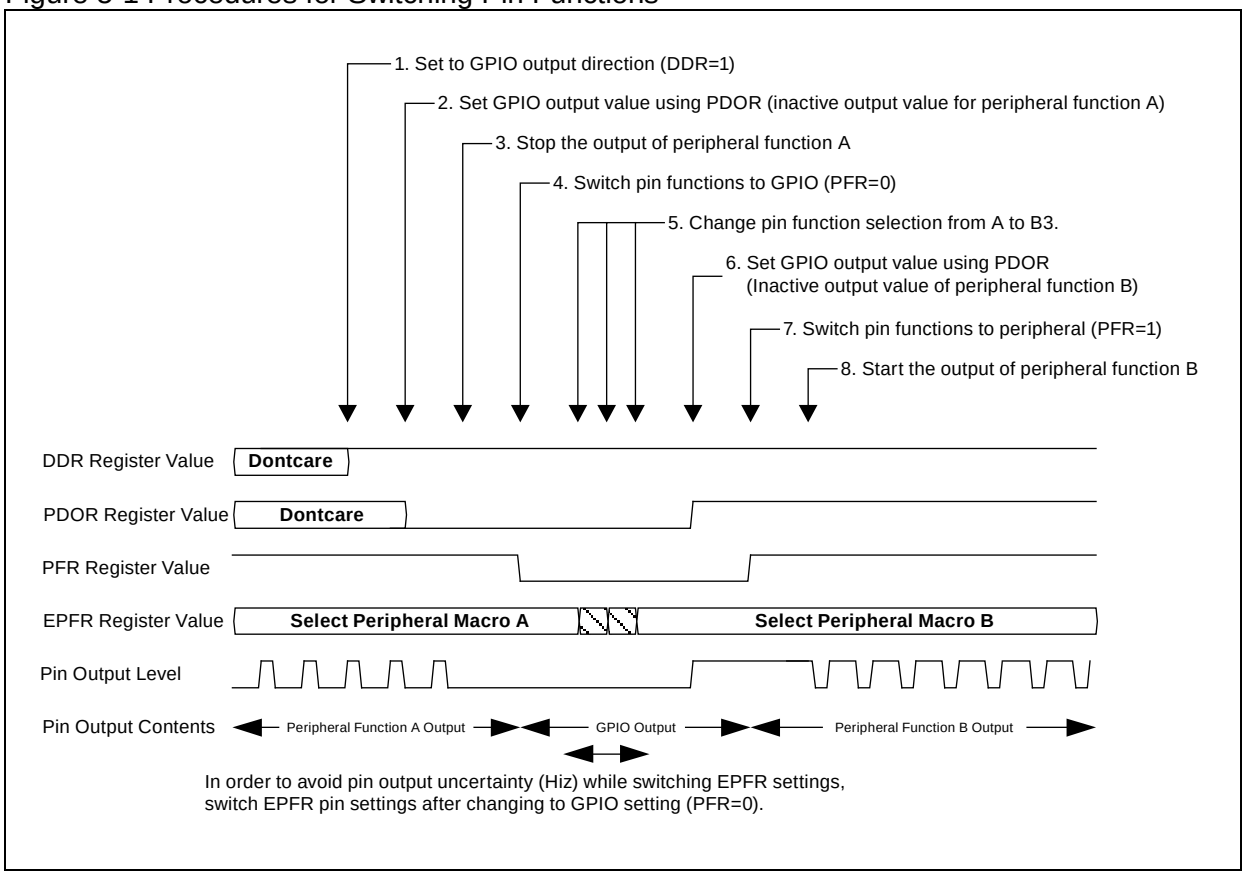

Reserved bit

This bit is read out as "0" except for that of ADE register. When writing, always write "0". The ADE reserved bit is read out as "1". When writing, always write "1".

Connecting External Bus Pin and SRAM

When accessing SRAM via external bus, either perform pull-up setting for the pin or connect it to external pull-up pin.

Multi-function Serial Pin Group

When there are some multi-function serial inputs/outputs, set each input/output to the port of the same group. "The port of the same group" means that relocate function numbers attached to the pin name are the same, just like "xxx_0" or "yyy_1".

Table 5-1 shows an example setting.

Table 5-1 Multi-function Serial Interface example setting

Serial Data Output	Serial Clock Input/Output	Serial Data Input	Effective Port
Pin SOT1_0 (Port 0)	Pin SCK1_0 (Port 0)	Pin SIN1_0 (Port 0)	Port 0
		Pin SIN1_1 (Port 1)	Setting is prohibited.
	Pin SCK1_1 (Port 1)	Pin SIN1_0 (Port 0)	
		Pin SIN1_1 (Port 1)	
Pin SOT1_1 (Port 1)	Pin SCK1_0 (Port 0)	Pin SIN1_0 (Port 0)	
		Pin SIN1_1 (Port 1)	
	Pin SCK1_1 (Port 1)	Pin SIN1_0 (Port 0)	
		Pin SIN1_1 (Port 1)	Port 1

Peripheral Function Output

As output pins for peripheral functions are uniquely determined by EPFR settings, Output for peripheral functions cannot be assigned to separate pins.

(Disabled example) Assign multifunction serial output SOT1_0 and SOT1_1 to the same output.

Pin Settings and Operation Mode

For JTAG settings, see Chapter "Debug Interface".

For state of each pin during standby mode or reset, see "Data Sheet" of the product used.

Product Specifications and Peripheral Function Pin Assignment

Functions which are assigned to pins (GPO, peripheral I/O and special I/O) vary in different products. Please see the pin function table of "Data Sheet" to confirm the pin function of each product. Do not select a function for a pin which is not available in your product by using the EPFR register setting.

When MDI pin is used as GPIO

To use MD1 pin, the following settings are required.

Input: By reading PDIR, the value is read.

Output: Only L output is available because I/O of MD1 pin is Nch open drain pin.

PFR=0 (Used as GPIO.)

DDR=1(Used as output)

PDOR=0 (Output data is "0".)

SPL=0 (GPIO status is retained in STOP mode.)

External Interrupt Pin Settings in Standby Mode

When the mode is transferred to the Standby mode under the setting of SPL=1, set PFR=1 and select peripheral functions to enable the external interrupt assignment pin for returning.

If the setting of a pin used for external interrupt is remained PFR=0, unintended operation occurs.

CHAPTER 11: CRC (Cyclic Redundancy Check)

This chapter explains the CRC functions.

1. Overview of CRC
2. CRC Operations
3. CRC Registers

1. Overview of CRC

The CRC (Cyclic Redundancy Check) is an error detection system. The CRC code is a remainder after an input data string is divided by the pre-defined generator polynomial, assuming the input data string is a high order polynomial. Ordinarily, a data string is suffixed by a CRC code when being sent, and the received data is divided by a generator polynomial as described above. If the received data is dividable, it is judged that the data is correctly received.

■ CRC functions

This module enables the calculation in both CCITT CRC16 and IEEE-802.3 CRC32. In this module, the generator polynomial is fixed to the numeric values for those two modes; therefore, the CRC value based on other generator polynomials cannot be calculated.

- CCITT CRC16 generator polynomial: 0x1021
- IEEE-802.3 CRC32 generator polynomial: 0x04C11DB7

■ CRC block diagram

Figure 1-1 shows the CRC block diagram.

Figure 1-1 CRC block diagram

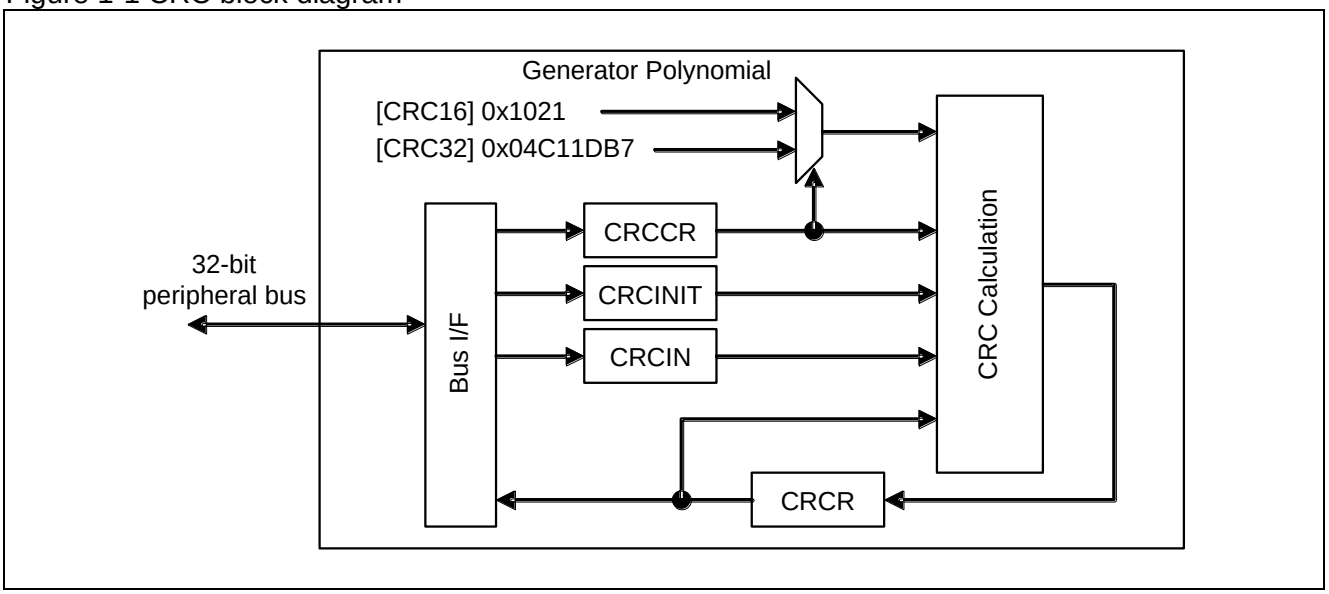

- CRCCR (CRC Control Register)
  Used to control CRC calculation.
- CRCINIT (CRC Initial Value Register)
  Used to specify the initial values for CRC calculation.
- CRCIN (Input Data Register)
  Used to set input data for CRC calculation.
- CRCR (CRC Register)
  Used to output the CRC calculation result.
- CRC Calculation
  A circuit to perform CRC calculation.

2. CRC Operations

This section provides an overview of CRC operations.

■ CRC definition

[CCITT CRC16 Standard]

Generator polynomial	0x1021	(CRCCR:CRC32=0)
Initial value	0xFFFF	
Final XOR value	0x0000	(CRCCR:FXOR=0)
bit order	MSB First	(CRCCR:LSBFST=0)
Output bit order	MSB First	(CRCCR:CRCLSF=0)

(The input-output byte order can be specified arbitrarily.)

[IEEE-802.3 CRC32 Ethernet Standard]

Generator polynomial	0x04C11DB7	(CRCCR:CRC32=1)
Initial value	0xFFFFFFFF	
Final XOR value	0xFFFFFFFF	(CRCCR:FXOR=1)
bit order	LSB First	(CRCCR:LSBFST=1)
Output bit order	LSB First	(CRCCR:CRCLSF=1)

(The input-output byte order can be specified arbitrarily.)

■ Reset operations

When resetting, the Initial Value Register (CRCINIT) and CRC Register (CRCR) are set to 0xFFFFFFFF. Other registers are cleared to "0".

■ Initialization

Initializing with the initialization bit (CRCCR:INIT) register loads the value of the Initial Value Register to the CRC Register (CRCR).

■ Processing byte and bit orders

The following shows how to process byte and bit orders, using examples.

Input the following one word to the CRC computing unit.

133.82.171.1 = 10000101 01010010 10101011 00000001

If the byte order is set to big endian (CRCCR:LTLEND=0), the sending sequence in bytes is configured as shown below.

10000101 01010010 10101011 00000001
(1st) (2nd) (3rd) (4th)

If the bit order is set to Little endian (CRCCR:LSBFST=1), the sending sequence in bits is configured as shown below.

10100001 01001010 11010101 10000000
(Head) (End)

<Note>

At CRCCR:CRCLTE=1, the CRC result is rearranged in bytes with the 32-bit width in both CRC16 and CRC32. In particular, in CRC16 mode, note that data is output to bit 31 to bit 16.

2.1. CRC calculation sequence

Figure 2-1 shows the CRC calculation sequence. In this section, it is assumed that the Initial Value Register (CRCINIT) setting, CRC16 or CRC32 mode selection (CRCCR:CRC32), and byte- or bit-order setting (CRCCR:LTLEND, CRCCR:LSBFST) have already been configured.
If the initial value can be set to 0xFFFFFFFF, the Initial Value Register (CRCINIT) setting can be omitted.

Figure 2-1 CRC calculation sequence

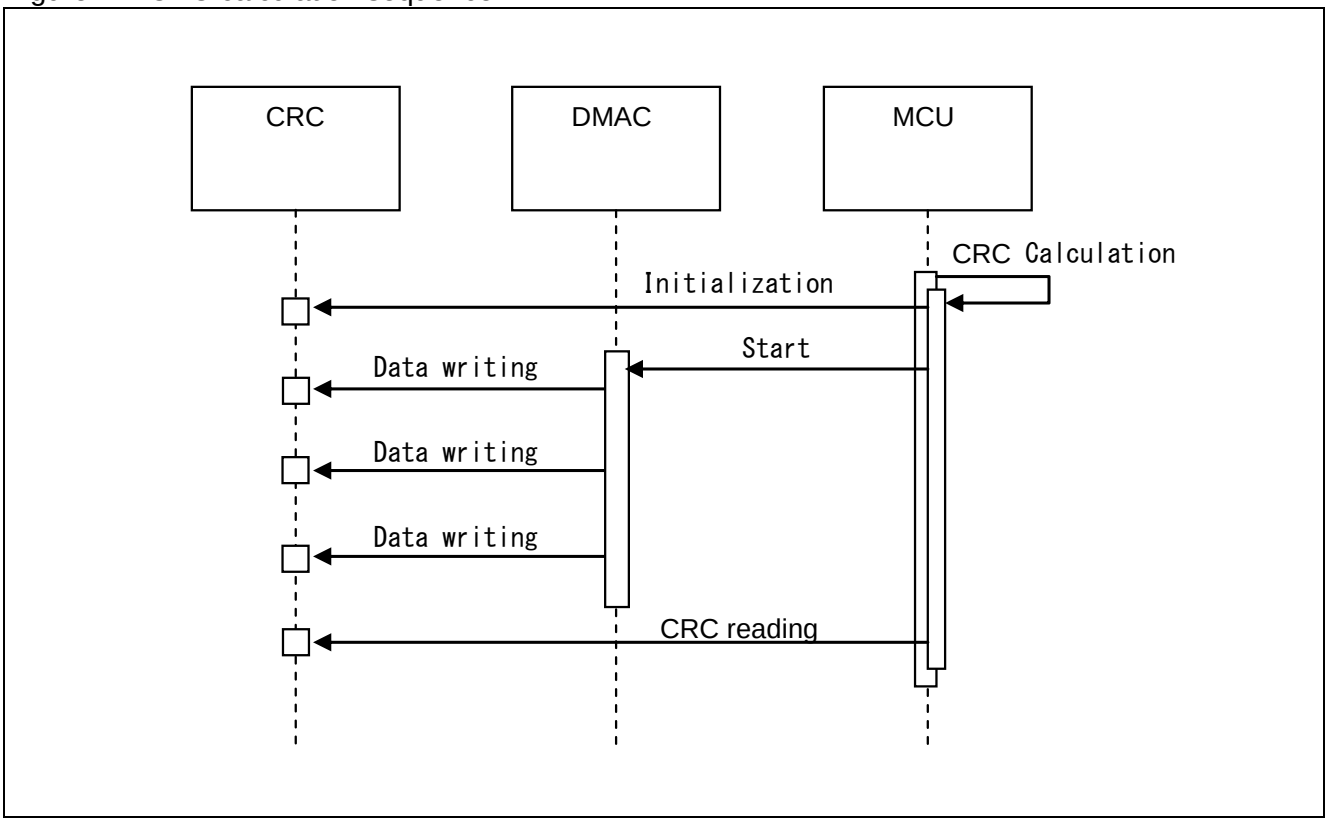

- To perform initialization, write "1" to the initial value bit (CRCCR.INIT). The value of the Initial Value Register (CRCINT) is loaded to the CRC Register (CRCR).

- To write input data, write to the Input Data Register (CRCIN). This then starts CRC calculation. If necessary, input data can be written continuously. Furthermore, different bit widths can be used in a sequence to write input data.

- To obtain a CRC code, read the CRC Register (CRCR).

2.2. CRC use examples

Figure 2-2 to Figure 2-5 show CRC use examples.

■ Use example 1 CRC16, Byte input fixed

Figure 2-2 Use example 1 (CRC16, byte input fixed, core byte order: Big endian)

```
//*****************************************
//  CRC16 (CRC ITU-T)
//     polynomial:      0x1021
//     initial value:   0xFFFF
//     CRCCR.CRC32:     0 //CRC16
//     CRCCR.LTLEND:    0 //big endian
//     CRCCR.LSBFST:    0 //MSB First
//     CRCCR.CRCLTE:    0 //CRC big endian
//     CRCCR.CRCLSF:    0 //CRC MSB First
//     CRCCR.FXOR:      0 //CRC Final XOR off
//*****************************************

//
// Example 1-1 byte-base writing
//

// Initialization
B_WRITE (CRCCR, 0x01);

// data write 0x3132333435363738 39
B_WRITE (CRCIN, 0x31);
B_WRITE (CRCIN, 0x32);
B_WRITE (CRCIN, 0x33);
B_WRITE (CRCIN, 0x34);
B_WRITE (CRCIN, 0x35);
B_WRITE (CRCIN, 0x36);
B_WRITE (CRCIN, 0x37);
B_WRITE (CRCIN, 0x38);
B_WRITE (CRCIN, 0x39);

// read result
H_READ (CRCR+2, data);

// check result
assert (data == 0x29B1);

//
// Example 1-2 CRC check
//

// Initialization
B_WRITE (CRCCR, 0x01);

// data write 0x3132333435363738 39 + CRC
B_WRITE (CRCIN, 0x31);
B_WRITE (CRCIN, 0x32);
B_WRITE (CRCIN, 0x33);
B_WRITE (CRCIN, 0x34);
B_WRITE (CRCIN, 0x35);
B_WRITE (CRCIN, 0x36);
B_WRITE (CRCIN, 0x37);
B_WRITE (CRCIN, 0x38);
B_WRITE (CRCIN, 0x39);
B_WRITE (CRCIN, 0x29); // <— CRC
B_WRITE (CRCIN, 0xB1); // <— CRC

// read result
H_READ (CRCR+2, data);

// check result
assert (data == 0x0000);
```

(Assumed as follows)

B_WRITE — Byte writing
H_WRITE — Half-word writing
W_WRITE — Word writing

B_READ — Byte reading
H_READ — Half-word reading
W_READ — Word reading

CRCCR — CRC Control Register address
CRCINIT — Initial Value Register address
CRCIN — Input Data Register address
CRCR — CRC Register address

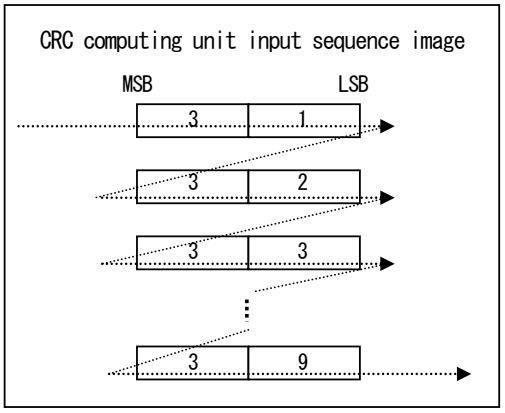

- The byte and half-word writing positions are arbitrary. In this example, data is written continuously at position +0.
- Table 2-1 shows the CPU, CRC result byte order, CRCR (CRC Register) output position, and read address in CRC16 mode.

Table 2-1 CPU, CRC result byte order, and CRCR read address

Core byte order	CRC result byte order	Output position to CRCR	CRCR H_READ address
Big endian	Big endian	bit 15 to bit 0	CRCR +2
Big endian	Little endian	bit 31 to bit 16	CRCR +0
Little endian	Big endian	bit 15 to bit 0	CRCR +0
Little endian	Little endian	bit 31 to bit 16	CRCR +2

■ Use example 2　CRC16, different input bit widths mixed

Figure 2-3 Use example 2 (CRC16, different input bit widths mixed, core byte order: Big endian)

```
//*****************************************
//  CRC16 (CRC ITU-T)
//     polynomial:      0x1021
//     initial value:   0xFFFF
//     CRCCR.CRC32:     0 //CRC16
//     CRCCR.LTLEND:    0 //big endian
//     CRCCR.LSBFST:    0 //MSB First
//     CRCCR.CRCLTE:    0 //CRC big endian
//     CRCCR.CRCLSF:    0 //CRC MSB First
//     CRCCR.FXOR:      0 //CRC Final XOR off
//*****************************************

//
// Example 2-1 Writing widths mixed
//

// Initialization
B_WRITE (CRCCR, 0x01);

// data write 0x313233343536373839
W_WRITE (CRCIN, 0x31323334);
H_WRITE (CRCIN, 0x3536);
H_WRITE (CRCIN+2, 0x3738);
B_WRITE (CRCIN+3, 0x39);

// read result
H_READ (CRCR+2, data);

// check result
assert (data == 0x29B1);

//
// Example 2-2 CRC check
//

// Initialization
B_WRITE (CRCCR, 0x01);

// data write 0x313233343536373839 + CRC
W_WRITE (CRCIN, 0x31313334);
W_WRITE (CRCIN, 0x35363738);
H_WRITE (CRCIN, 0x3929);      // <— CRC(0x29)
B_WRITE (CRCIN, 0xB1);        // <— CRC(0xB1)

// read result
H_READ (CRCR+2, data);

// check result
assert (data == 0x0000);
```

```
(Assumed as follows)

B_WRITE    — Byte writing
H_WRITE    — Half-word writing
W_WRITE    — Word writing

B_READ     — Byte reading
H_READ     — Half-word reading
W_READ     — Word reading

CRCCR      — CRC Control Register address
CRCINIT    — Initial Value Register address
CRCIN      — Input Data Register address
CRCR       — CRC Register address
```

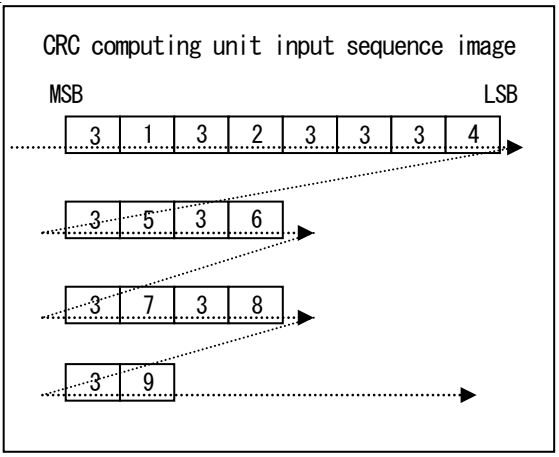

- If the byte or bit order setting is correct and the bit input sequence to the CRC computing unit is the same, the writing width can be specified arbitrarily.
  For example, if a 1-, 2-, or 3-byte fraction is finally obtained in the word-base writing mode, both byte and half-word writings may be enabled.

■ Use example 3　CRC32, byte order: Big endian

Figure 2-4 Use example 3 (CRC32, byte order: Big endian)

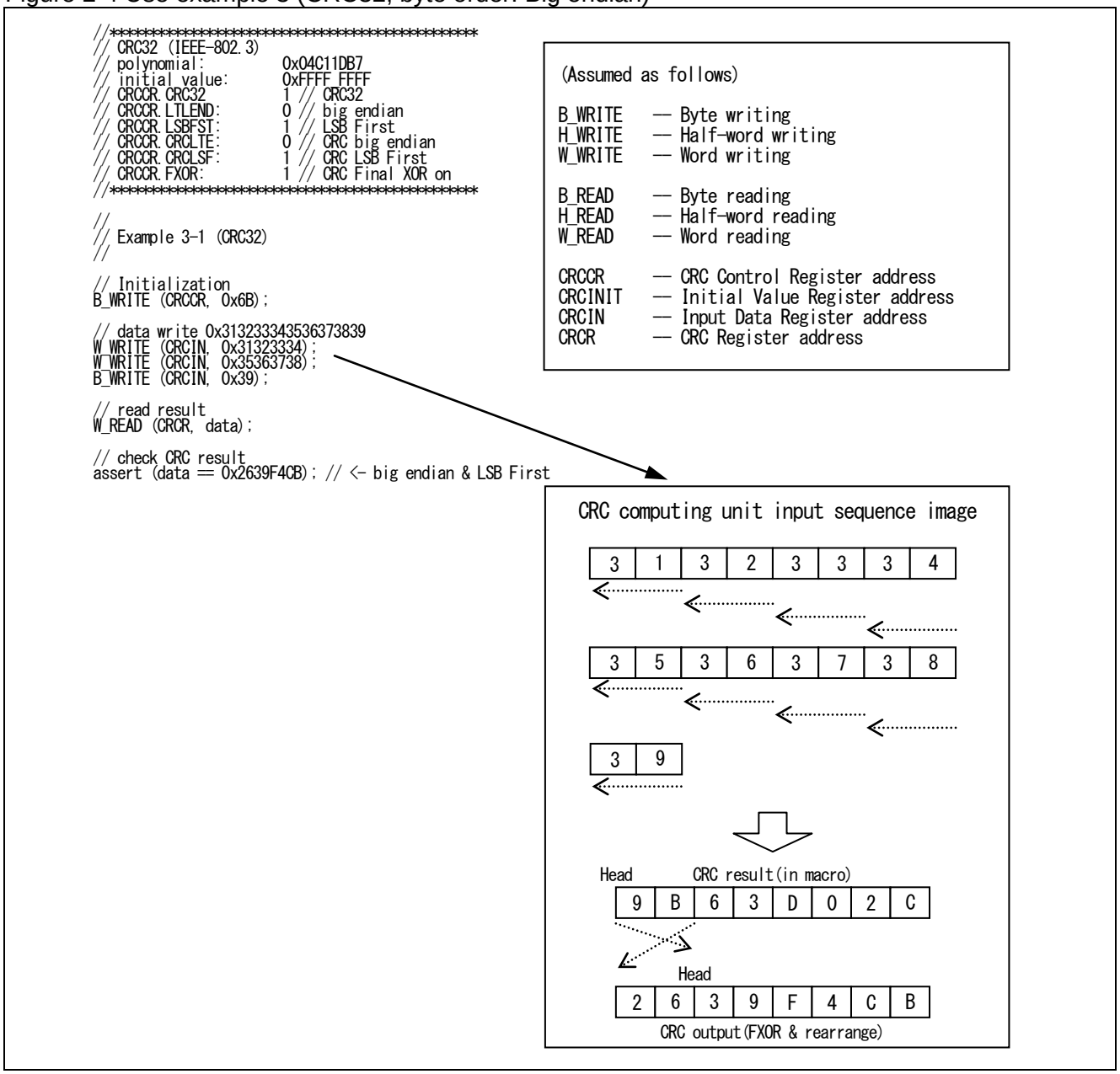

· In CRC32 (IEEE-802.3) mode, the bit order is set to LSB First. This CRC computing unit supports both the big endian and little endian as the byte order. Figure 2-4 shows an example for big endian.

■ Use example 4　CRC32, byte order: Little endian

Figure 2-5 Use example 4 (CRC32, byte order: Little endian)

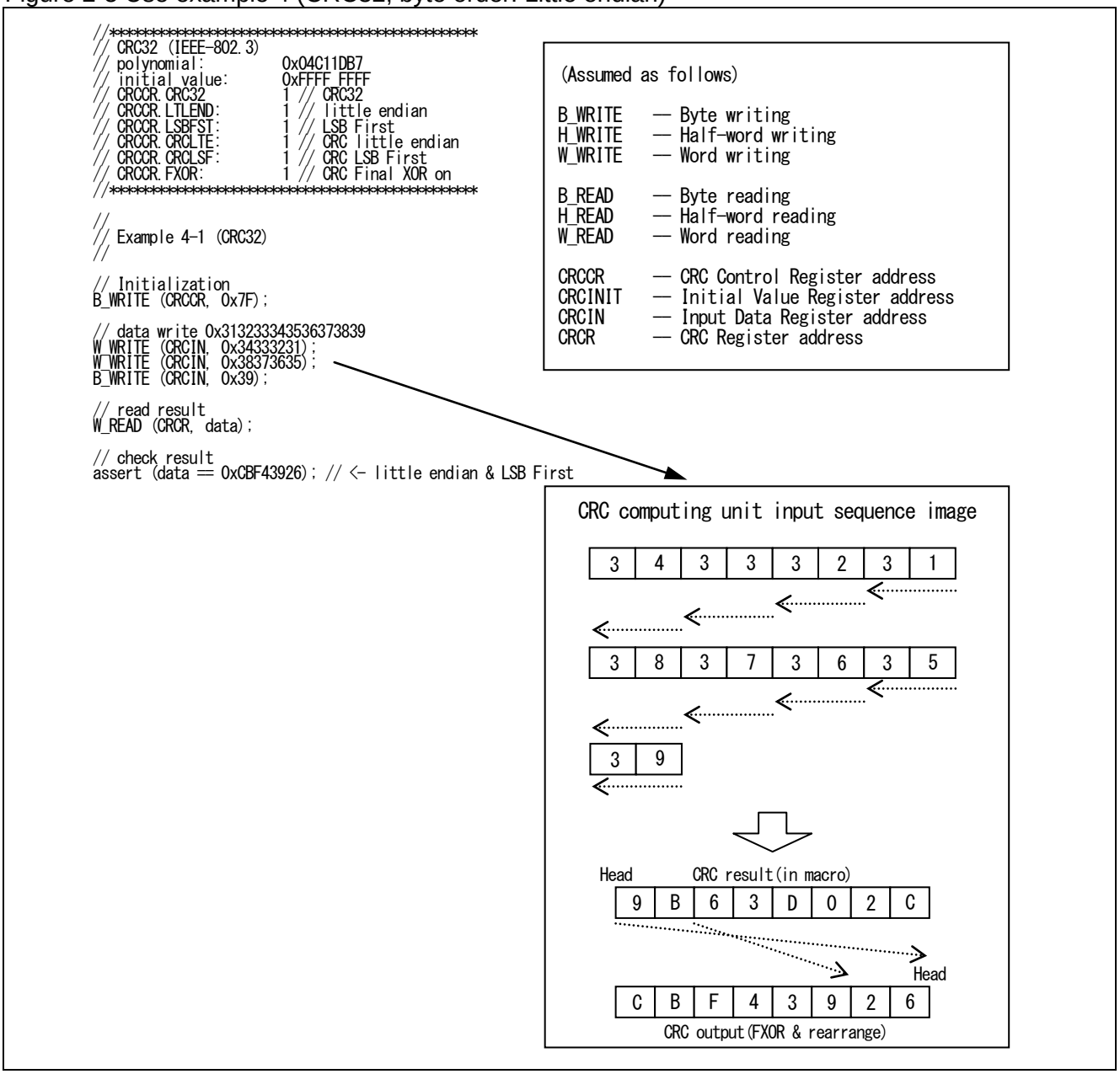

- In CRC32 (IEEE-802.3) mode, the bit order is set to LSB First. This CRC computing unit supports both the big endian and little endian as the byte order. Figure 2-5 shows an example for little endian.

- If bit inversion is not required for the CRC result, perform either one of the following processes to release the bit inversion for the current result.
  - Before calculation, initialize with CRCCR=0x3F (CRCCR:FXOR="0", CRCCR:INIT="1").
  - After data was input, set the CRCCR=0x3E (CRCCR:FXOR="0", CRCCR:INIT="0").

3. CRC Registers

This section provides a list of CRC registers.

■ CRC registers

Table 3-1 CRC register list

Abbreviation	Register name	Reference
CRCCR	CRC Control Register	3.1
CRCINIT	Initial Value Register	3.2
CRCIN	Input Data Register	3.3
CRCR	CRC Register	3.4

3.1. CRC Control Register (CRCCR)

The CRC Control Register (CRCCR) is used to control CRC calculation.

bit	7	6	5	4	3	2	1	0
Field	Reserved	FXOR	CRCLSF	CRCLTE	LSBFST	LTLEND	CRC32	INIT
Attribute	R/W	R/W	R/W	R/W	R/W	R/W	R/W	R/W
Initial value	0	0	0	0	0	0	0	0

[bit7] Reserved: Reserved bit

The read value is "0".

Be sure to write "0" to this bit.

[bit6] FXOR: Final XOR control bit

This bit is used to output the CRC result as the XOR value or XOR.

The XOR value is set to 0xFFFFFFFF. The CRC result value is inverted at FXOR=1.

This processing is performed in the latter part of the CRC Register(CRCR) processing. The CRC result is therefore reflected on the read value immediately after this bit was set.

Value	Description
0	None
1	Yes

[bit5] CRCLSF: CRC result bit-order setting bit

This is a bit-order setting bit for CRC result.

This bit is used to rearrange bits within each byte. Set "0" to specify MSB First and set "1" to specify LSB First.

This processing is performed in the latter part of the CRC Register(CRCR) processing. The CRC result is therefore reflected on the read value immediately after this bit was set.

Value	Description
0	MSB First
1	LSB First

[bit4] CRCLTE: CRC result byte-order setting bit

This is a byte-order setting bit for CRC result.

This bit is used to rearrange the byte order in each word. Set "0" to specify big endian and set "1" to specify little endian.

This processing is performed in the latter part of the CRC Register(CRCR) processing. The CRC result is therefore reflected on the read value immediately after this bit was set.

If this bit is set to "1" in CRC16 mode, data is output to the D[31:16] of CRC Register(CRCR).

Value	Description
0	Big endian
1	Little endian

[bit3] LSBFST: bit-order setting bit

This is a bit-order setting bit.
This bit is used to specify the head bit of a byte (8 bits). Set "0" to specify MSB First and set "1" to specify LSB First.
Four types of processing orders can be specified when this bit is combined with the LTLEND bit setting.

Value	Description
0	MSB First
1	LSB First

[bit2] LTLEND: Byte-order setting bit

This is a byte-order setting bit.
This bit is used to specify the byte order with the write width. Set "0" to specify big endian and set "1" to specify little endian.

Value	Description
0	Big endian
1	Little endian

[bit1] CRC32: CRC mode selection bit

This bit is used to select the CRC16 or CRC32 mode.

Value	Description
0	CRC16
1	CRC32

[bit0] INIT: Initialization bit

This is an initialization bit. Writing "1" to this bit initializes data. This bit does not have a value, and always returns "0" at reading.
At initialization, the value of the Initial Value Register(CRCINIT) is loaded to the CRC Register(CRCR).
Initialization must be performed once at the start of CRC calculation.

Value	Description	
	Write	Read
0	No operation	Always reads "0".
1	Initialization	

3.2. Initial Value Register (CRCINIT)

The Initial Value Register (CRCINIT) is used to save the initial values for CRC calculation.

bit	31	0
Field	D[31:0]	
Attribute	R/W	
Initial value	0xFFFFFFFF	

[bit31:0] D[31:0] : Initial value bits

These bits are used to save the initial values for CRC calculation.
Write the initial values for CRC calculation to this register.

(0xFFFFFFFF at resetting)
In CRC16 mode, D15 to D0 are used while D31 to D16 are ignored.

3.3. Input Data Register (CRCIN)

The Input Data Register (CRCIN) is used to set input data for CRC calculation.

bit	31	0
Field	D[31:0]	
Attribute	R/W	
Initial value	0x00000000	

[bit31:0] D[31:0] : Input data bits

These bits are used to set input data for CRC calculation.

Write input data for CRC calculation to this register. There are three types of bit widths: 8-bit, 16-bit, and 32-bit (byte, half word, word), which can be specified together.

The byte and half-word writing positions are arbitrary. The available address positions are as follows.

Byte writing: +0, +1, +2, +3

Half-word writing: +0, +2

3.4. CRC Register (CRCR)

The CRC Register (CRCR) is used to output the CRC calculation result. This register must be initialized before start calculating.

bit	31	0
Field	D[31:0]	
Attribute	R	
Initial value	0xFFFFFFFF	

[bit31:0] D[31:0] : CRC bits

These bits are used to read the CRC calculation result. If "1" is written to the initialization bit (CRCCR:INIT), the value of the Initial Value Register (CRCINIT) is loaded to this register.

If input data for CRC calculation is written to the Input Data Register (CRCIN), the CRC calculation result is set to this register after one machine clock cycle has elapsed. When all input data writing has been completed, this register holds the final CRC code.

In CRC16 mode, when the byte order is set to big endian (CRCLTE=0), the result is output to D15 to D0. When the byte order is set to little endian (CRCLTE=1), the result is output to D31 to D16.

CHAPTER 12: External Bus Interface

This chapter explains the functions and operations of the external bus interface.

1. Overview of External Bus Interface
2. Block Diagram
3. Operations
4. Connection Examples
5. Setup Procedure Example
6. Registers
7. Usage Precautions

1. Overview of External Bus Interface

This section explains an overview of the external bus interface.

The external bus interface allows connections with SRAM/Flash memory outside of the device.

■ External bus interface features

The features of the external bus interface across the products are as follows:

- Supports connections with 8-bit/16-bit wide SRAM/NOR Flash memories/NAND Flash memories.
  Normal SRAM accesses are used for accessing the NOR Flash memories but special pins are available for accessing the NAND Flash memories.
- Up to 8 chip select signals are available.
  Address and access timing parameters can be separately set for each chip select signal.
- Up to 25 bits address can be output.
- Supports NOR Flash memory page read.
- Byte lane is fixed to little endian.
- When the access width from CPU and the external bus width are different, the bus size will automatically be converted.
- Pins dedicated for NAND Flash memories allow accessing other SRAM devices which share the data line during accessing the NAND Flash memories (exclusive access control is not required).

Products other than TYPE0 have additional features below.

- Separate mode and multiplex mode are supported for bus accesses.
- The access timing parameter of ALE signal is added to support the multiplex mode. In addition, more detailed parameter settings, such as CS assert timing, are possible.
- Clock output feature allows synchronous accesses with target devices.
- Supports external RDY feature.

■ Access Timing and AC Specifications

● Asynchronous Accesses

The external bus interface performs read data latching to the timing of the output enable (MOEX) signal in reading data. Make the target device to perform the write data latching to the timing of the write enable (MWEX) signal in writing data. An example of the asynchronous access is shown in Figure 1-1.

Figure 1-1 Asynchronous Access

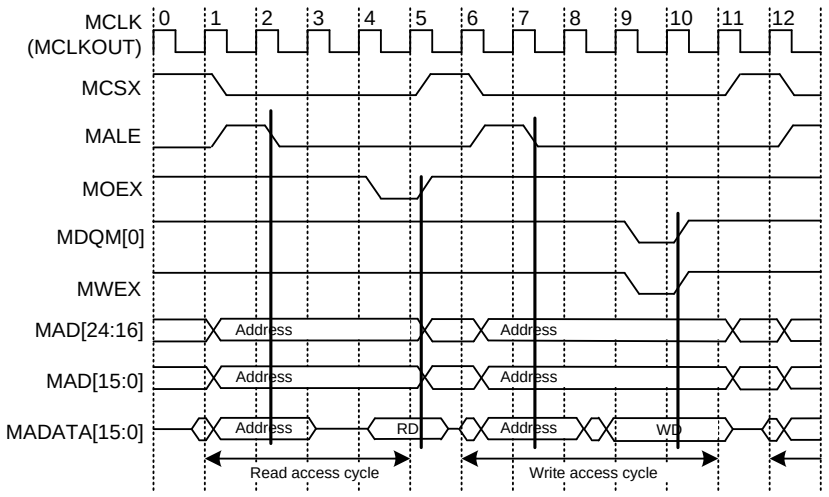

● Synchronous Accesses

The external bus interface performs read data latching synchronized with the clock output in reading data. Make the target device to perform the write data latching synchronized with the clock output in writing data. An example of the synchronous access is shown in Figure 1-2.

Figure 1-2 Synchronous Access

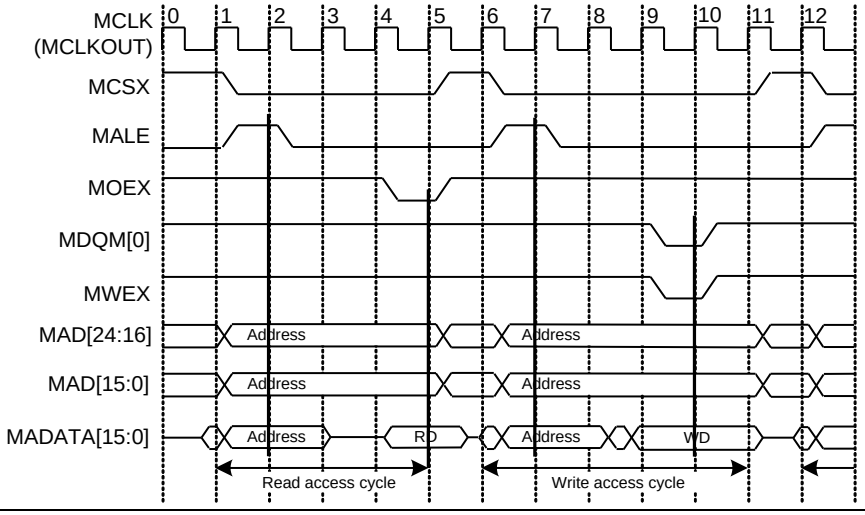

<Note>

See "Data Sheet" of the product used for details of the AC specifications.

2. Block Diagram

This section explains the block diagram of the external bus interface. Clock output function is not available in the TYPE0 products.

Figure 2-1 External bus interface block diagram

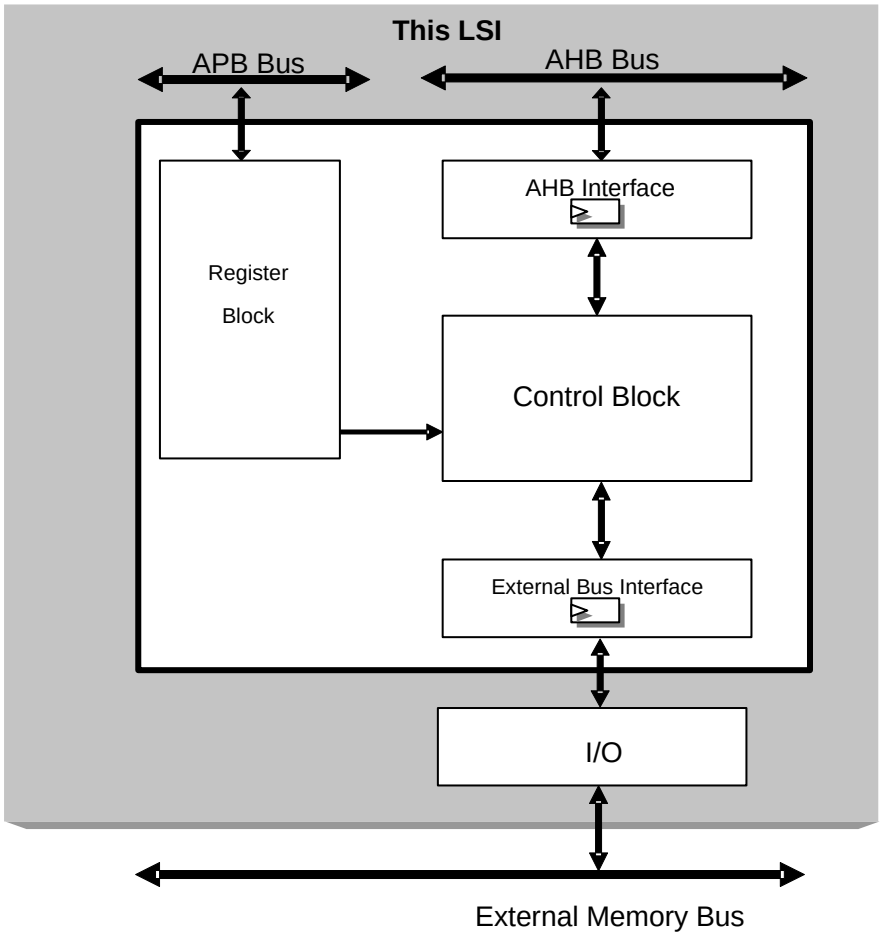

- Register Block
  Registers which set the features of this interface. These are connected with the APB bus.
- Control Block
  This block controls the operations of this interface. This block is connected with the AHB bus.
- External Bus Interface
  This interface connects the function block and the external memory bus.

Figure 2-2 External bus interface block diagram clock system overview diagram

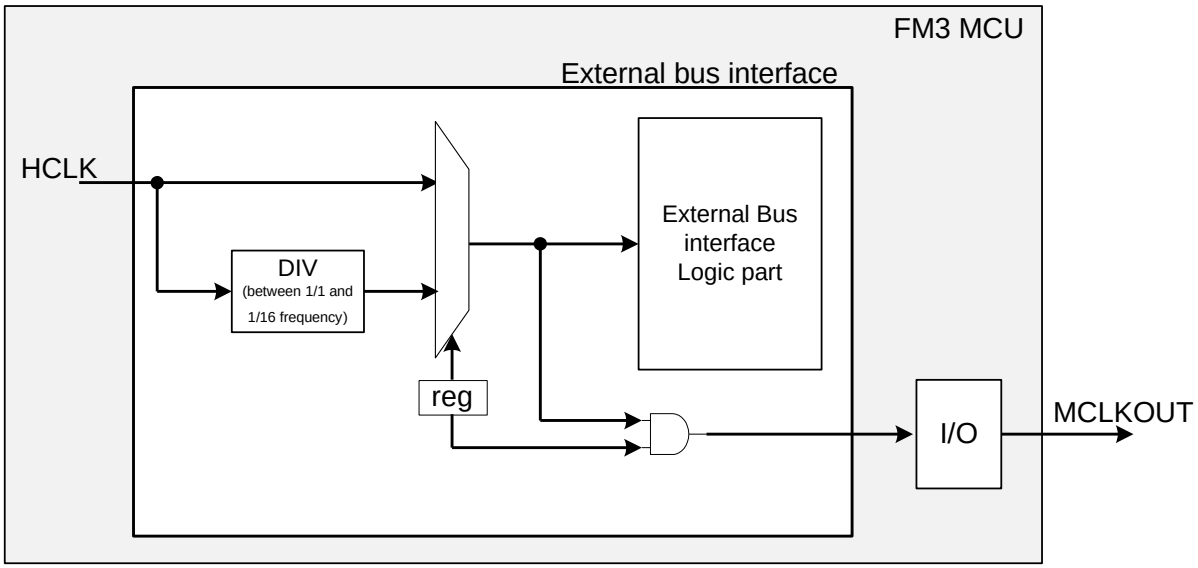

<Notes>

- HCLK indicates a master clock. For the details, see the chapter "Clock".
- To output external bus interface operation clock, a clock output setting is required in GPIO. For the details of the setting, see the chapter "I/O Port".
- To output a clock, make sure to set DCLKR:MCLKON = 1 and execute frequency division setting. At this time, a frequency between 1/1 and 1/16 can be set.
- To set a clock output, confirm "external bus clock output standard" in the Data Sheet of products used.
- Clock output function is not available in the TYPE0 products.

- Pin List
  The pin list of the external bus interface is shown in Table 2-1.

Table 2-1 Pin List of External Bus Interface

Pin Name	Function
MAD[24:0]	Address output pins
MADATA[15:0]	Data input/output pins (These pins will be changed to input/output pins for address/data in multiplex mode.)(The names of the data input/output pins are "MDATA[15:0]" for the TYPE0 products.)
MCSX[7:0]	Chip select pins
MDQM[1:0]	Byte mask signal output pins
MALE	Address latch enable output pin (Multiplex mode only)
MOEX	Output enable output pin
MWEX	Write enable output pin
MRDY	RDY signal input pin
MCLKOUT	Clock output pin
MNALE	Address latch enable output pin for NAND Flash memories
MNCLE	Command latch enable output pin for NAND Flash memories
MNREX	Read enable output pin for NAND Flash memories
MNWEX	Write enable output pin for NAND Flash memories

<Notes>

- Placement of the external bus interface pins depends on the product type. See the data sheets of products used for the details.
- The names of the data input/output pins are "MDATA[15:0]" for the TYPE0 products.

3. Operations

The section explains the operations of the external bus interface.

3.1 Bus Access Mode

3.2 SRAM and NOR Flash Memories Access

3.3 NAND Flash memory access

3.4 Issue of an 8-bit NAND Flash memory read/write command

3.5 8-bit NAND Flash memory status read

3.6 8-bit NAND Flash memory data write

3.7 Automatic Wait Setup

3.8 External RDY

3.1. Bus Access Mode

The following explains bus access mode.

■ Access Method

The external bus interface allows selecting separate mode or multiplex mode from the register.

● Separate Mode

This mode outputs the address to the MAD[24:0] pins and inputs/outputs the data to the MADATA[15:0] pins.
As the address pins and data pins are separated each other, connecting directly with the normal SRAM and high speed accesses can be achieved. An example of waveform in separate mode is shown in Figure 3-1.

Figure 3-1 Example of Waveform in Separate Mode

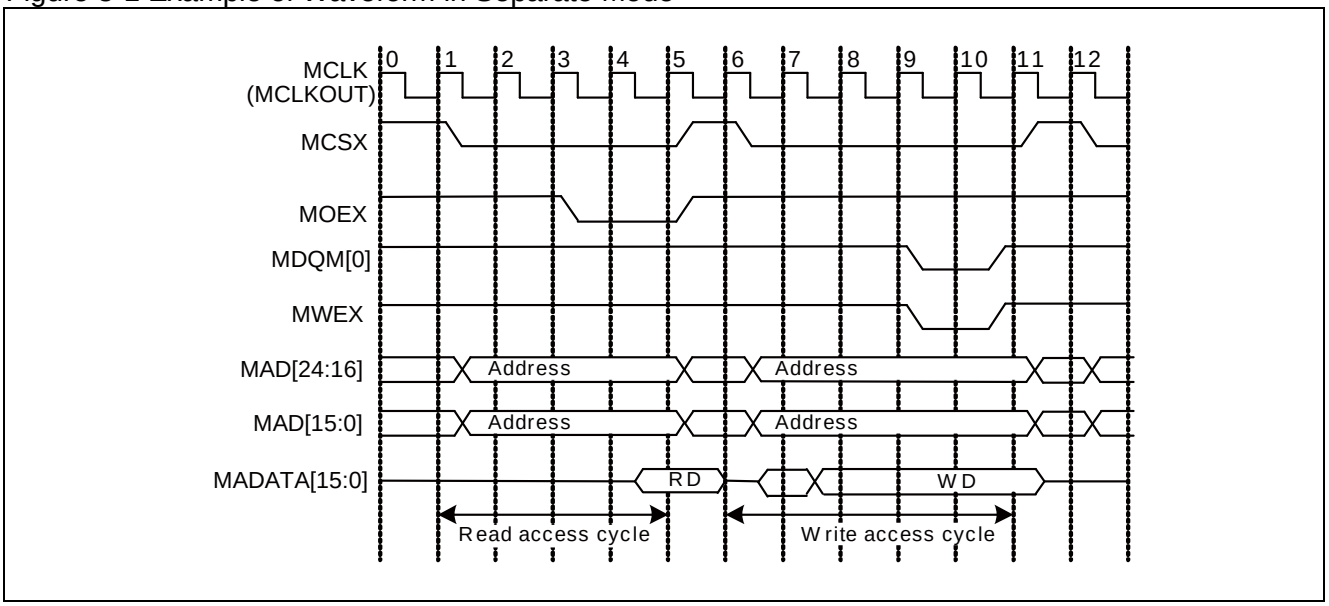

Multiplex Mode

This mode inputs/outputs the address/data to MADATA[15:0] pins in a time division manner. As the part of address pins and data pins are shared, fewer pins are used for accessing the external memories. An example of waveform in multiplex mode is shown in Figure 3-2.

Figure 3-2 Example of Waveform in Multiplex Mode

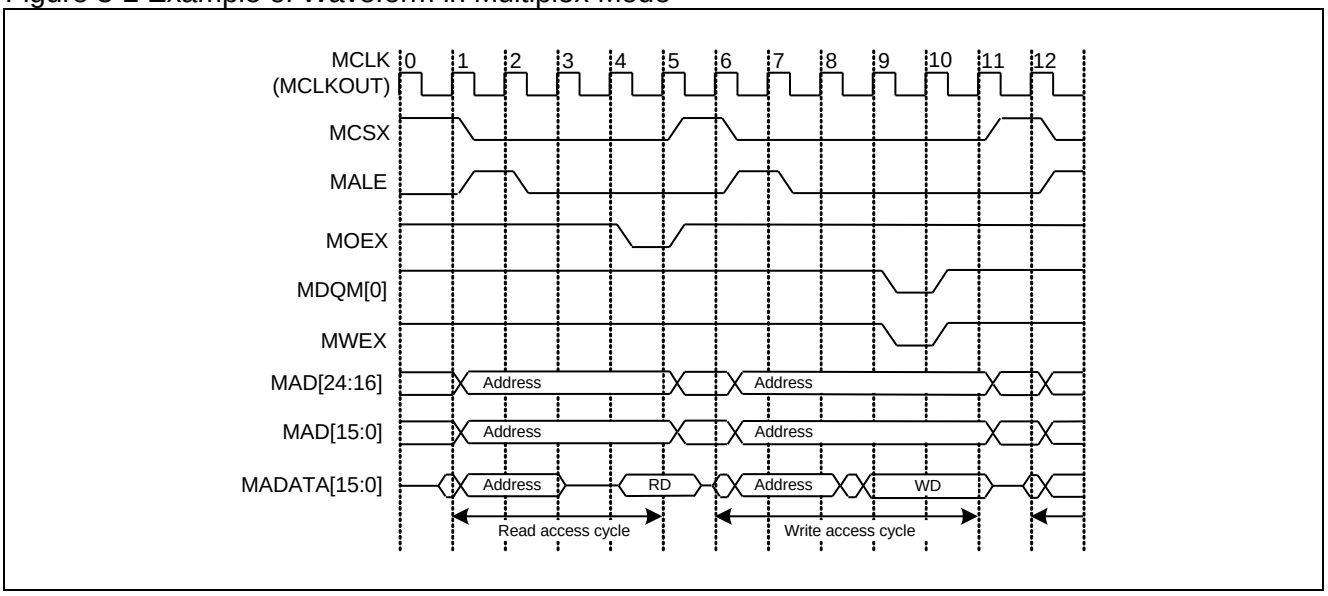

Summary of selected bus access mode and their pin functions is shown in Table 3-1.

Table 3-1 Bus Access Mode and Pin Function

Pin	16-bit Separate	16-bit Multiplex	8-bit Separate	8-bit Multiplex
MAD[24:16]	Address [24:16]	Address [24:16]	Address [24:16]	Address [24:16]
MAD[15:8]	Address [15:8]	(Address [15:8])	Address [15:8]	(Address [15:8])
MAD[7:0]	Address [7:0]	(Address [7:0])	Address [7:0]	(Address [7:0])
MADATA[15:8]	Data [15:8]	Address [15:8] Data [15:8] Multiplex	No output	(Address [15:8])
MADATA[7:0]	Data [7:0]	Address [7:0] Data [7:0] Multiplex	Data [7:0]	Address [7:0] Data [7:0] Multiplex

(Note) Address output from MAD pins in multiplex mode is available depending on the GPIO setups.

■ Bus Access Modes and Functions Setups

Bus access modes and the functions setups are shown in Table 3-2.

Table 3-2 Bus Access Modes and Functions Setups (Products other than TYPE0)

Bus Access Mode	Clock output	External RDY	Page read	NAND Flash	Clock division
Separate bus mode	○	○	○	○	○
Multiplex mode	○	○	Not allowed	Not allowed	○

Bus Access Mode	Page read	NAND Flash
Separate bus mode	○	○

Do not make a setup which uses page read and NAND Flash mode at the same time.

Do not make a setup which uses page read and external RDY at the same time.

Do not make a setup which uses NAND Flash mode and external RDY at the same time.

Do not output the clock in NAND Flash mode.

<Notes>

- Placement of the external bus interface pins depends on the product type. See the data sheets of products used for the details.
- "Clock output", "External RDY", "Clock division" and "Multiplex mode" features cannot be selected for the TYPE0 products.

■ Bus Size Conversion and Continuous Access

If an access with an externals bus width narrower than the CPU access width is made, the access will be divided and converted into continuous accesses which continuously change the address only with holding MCSX="L". For example, when a 32-bit read access is made from the internal bus to the 8-bit bus width, the address will be changed as 0 -> 1 -> 2 -> 3 with holding MCSX="L" and the data will be output continuously from the MADATA [7:0] with the transfer timing.

The word read access waveform to the 8-bit width SRAM is shown in Figure 3-3.

The continuous word write/read access waveform to the 16-bit width SRAM is shown in Figure 3-4.

Figure 3-3 Waveform of Word Read Access to 8-bit Width SRAM

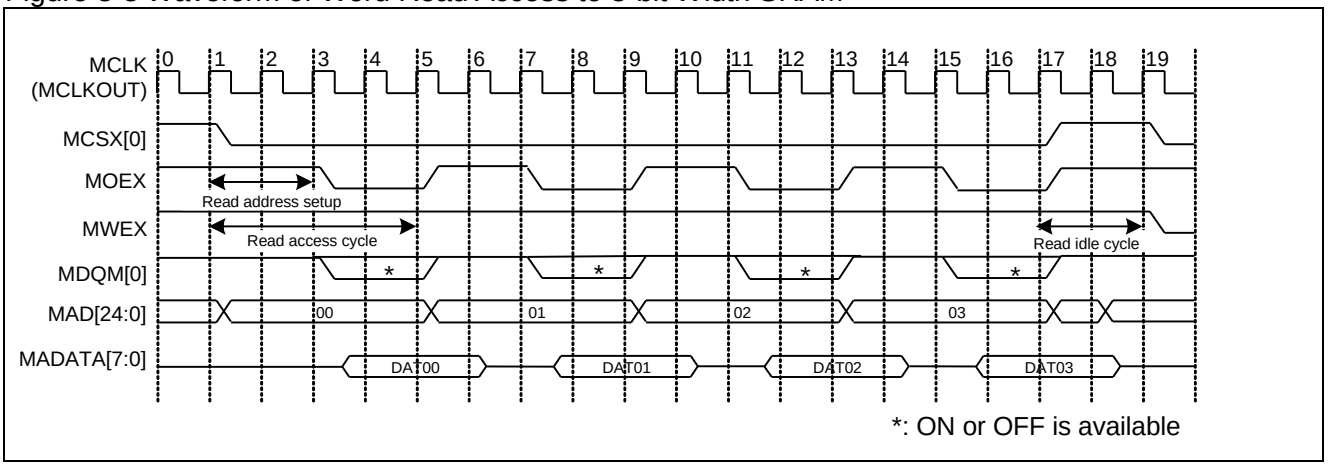

Figure 3-4 Waveform of Continuous Word Write/Read Access to 16-bit Width SRAM

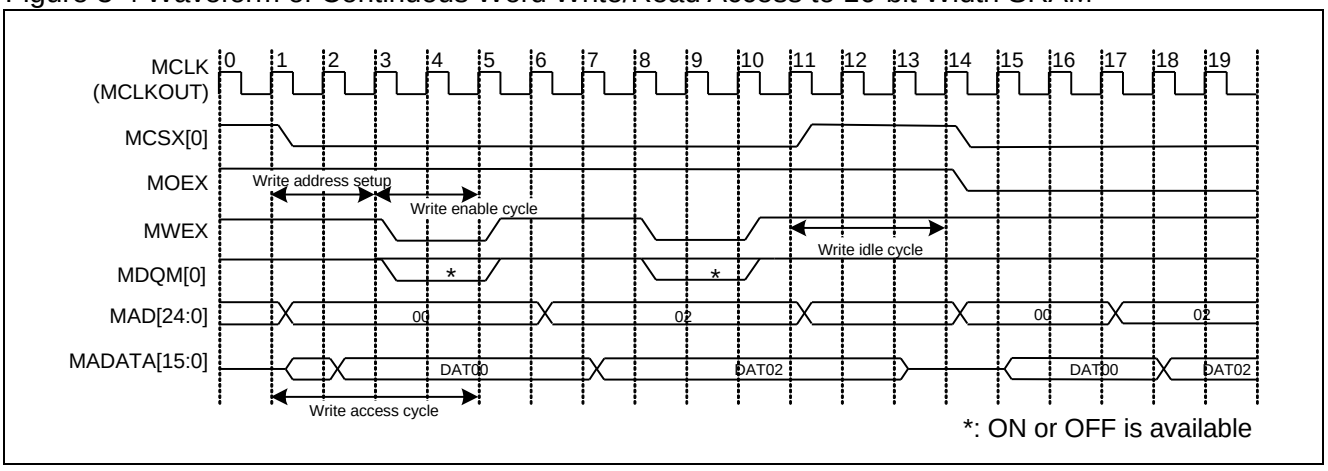

<Note>

The idle cycle in continuous access will be inserted only after the access to the last address.

Table 3-3 shows the mapping between the CPU access width and the external bus width.

Table 3-3 CPU Access Width and External Bus Width Mapping

External bus width	Access from CPU		Access to external bus			
	Access type	Address	Access order	Output value from MAD[1:0]	Valid data at MADATA[15:0]	Output value from MDQM[1:0]
8-bit	Byte (8 bits)	0	No division	0b00	MADATA[7:0]	0b10
		1	No division	0b01		0b10
		2	No division	0b10		0b10
		3	No division	0b11		0b10
	Half-word (16 bits)	0	1/2 access	0b00	MADATA[7:0]	0b10
			2/2 access	0b01		0b10
	Half-word (16 bits)	2	1/2 access	0b10		0b10
			2/2 access	0b11		0b10
	Word (32 bits)	0	1/4 access	0b00	MADATA[7:0]	0b10
		1	2/4 access	0b01	MADATA[7:0]	0b10
		2	3/4 access	0b10	MADATA[7:0]	0b10
		3	4/4 access	0b11	MADATA[7:0]	0b10
16-bit	Byte (8 bits)	0	No division	0b00	MADATA[7:0]	0b10
		1	No division	0b00	MADATA[15:8]	0b01
		2	No division	0b10	MADATA[7:0]	0b10
		3	No division	0b10	MADATA[15:8]	0b01
	Half-word (16 bits)	0	No division	0b00	MADATA[15:0]	0b00
		2	No division	0b10	MADATA[15:0]	0b00
	Word (32 bits)	0	1/2 access	0b00	MADATA[15:0]	0b00
			2/2 access	0b10	MADATA[15:0]	0b00

HADDR: AHB address input

As for a target with 8-bit width, the input/output data will be determined with the values of HADDR[1:0].
As for a target with 16-bit width, the HADDR[0] is not used.

<Note>

General purpose ports or shared function can be selected per bit for the MAD pins and MADATA pins. See separate chapter "I/O Port" for the detail of the setups.

3.2. SRAM and NOR Flash Memories Access

The following explains SRAM and NOR Flash memories access.

■ Memory Access

The target device of the SRAM and NOR Flash memories access will be determined with the MCSX [7:0]/address outputs. After that, outputting MOEX/MWEX will make a read/write to the target device (SRAM and NOR Flash memories).

■ Pins Used

SRAM and NOR Flash memory accesses require the pins shown in Table 3-4.

Table 3-4 External Interface Pins used for SRAM and NOR Flash Memories

Pin name	Function
MAD[24:0]	Address output pins
MADATA[15:0]	Data input/output pins (These pins will be changed to input/output pins for address/data in multiplex mode.) (The names of the data input/output pins are "MDATA[15:0]" for the TYPE0 products.)
MCSX[7:0]	Chip select pins
MDQM[1:0]	Byte mask signal output pins
MALE	Address latch enable output pin (Multiplex mode only)
MOEX	Output enable output pin
MWEX	Write enable output pin
MRDY	RDY signal input pin
MCLKOUT	Clock output pin

<Notes>

- Not all of the pins shown in Table 3-3 will be used depending on the setups or target devices (SRAM and NOR Flash memories).
  - Placement of the external bus interface pins depends on the product type. See the data sheets for the details.
  - The names of the data input/output pins are "MDATA[15:0]" for the TYPE0 products.

■ Page Read for 16-bit NOR Flash Memories

The page read operation is available for NOR Flash memories by setting PAGE bit which is the fifth bit of the mode register (MODE0 to MODE7) to "1".

The page read will continue read cycle while in reading operation to the boundary of the 16 bytes with MOEX=L retained. The waveform of 16-bit NOR Flash memory page read is shown in Figure 3-5.

The address is retained within the first cycle for specified cycles (First read address cycle). The accesses after the first cycle will be made with the number of cycles specified by the RACC.

Figure 3-5 Waveform of 16-bit NOR Flash Memory Page Read

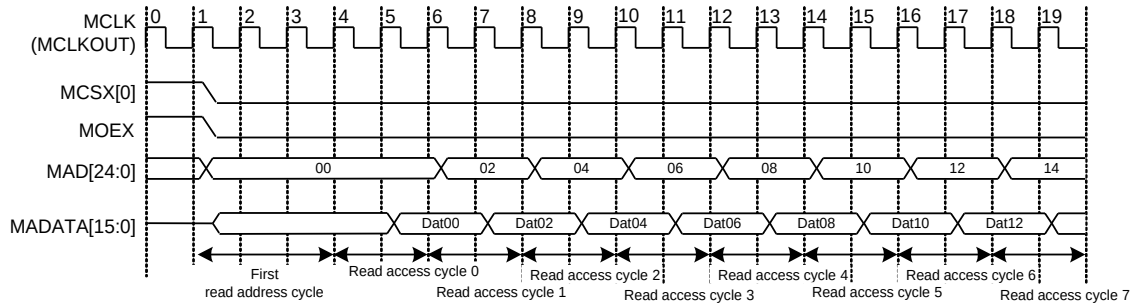

- MOEX will be asserted at the same timing of MCSX.
- The first read address cycle is a FRADC cycle set with the TIM register.

<Notes>

- Page read is not available in multiplex mode.
- Page read is not available in NAND Flash memory mode.

3.3. NAND Flash memory access

The following explains NAND Flash memory access.

■ Memory Access Methods

Accesses to the NAND Flash memories will be converted as shown below, based on the base address for the area set to NAND mode.

A write access to +0x2000 is converted into the issue of an address for the NAND Flash memory (MNALE is asserted).

A write access to +0x1000 is converted into the issue of a command for the NAND Flash memory (MNCLE is asserted).

A write/read access to +0x0000 will be converted to a data access to the NAND Flash memories (MNALE and MNCLE will not be asserted).
In this case, all the access timing setups is the same as the setups used by SRAM accesses.
MNCLE will be output at the same timing of address output for accessing.
MNALE will be held asserted until a write access to +0x3000 or a write access other than an address issuance (data or command) is made after the address is issued. This is because NAND Flash memories cannot de-assert the MNALE between multiple write accesses for issuing addresses. An access to +0x3000 will de-assert the MNALE only, not perform an access. Figure 3-6 shows the process of NAND Flash memory access. (For details about the commands, see the specification of NAND Flash memory connected to this family)

■ Pins Used

NAND Flash memory accesses require the pins shown in Table 3-5.

Table 3-5 External Interface Pins for NAND Flash Memories

Pin name	Function
MADATA[15:0]	Data input/output pins (The names of the data input/output pins are "MDATA[15:0]" for the TYPE0 products.)
MCSX[7:0]	Chip select pins
MNALE	Address latch enable output pin for NAND Flash memories
MNCLE	Command latch enable output pin for NAND Flash memories
MNREX	Read enable output pin for NAND Flash memories
MNWEX	Write enable output pin for NAND Flash memories

<Notes>

- Not all of the pins shown in Table 3-5 will be used depending on the setups or target devices.
- Placement of the external bus interface pins depends on the product type. Some of products have not outputs for NAND Flash memory mode pins. See the data sheets of products used for the details.
- Multiplex mode is not available for NAND Flash memory accesses.
- The names of the data input/output pins are "MDATA[15:0]" for the TYPE0 products.

3.3.1. Read access to NAND Flash memory

Figure 3-6 shows the flowchart of read access to NAND Flash memory.

Figure 3-6 Flowchart of read access to NAND Flash memory

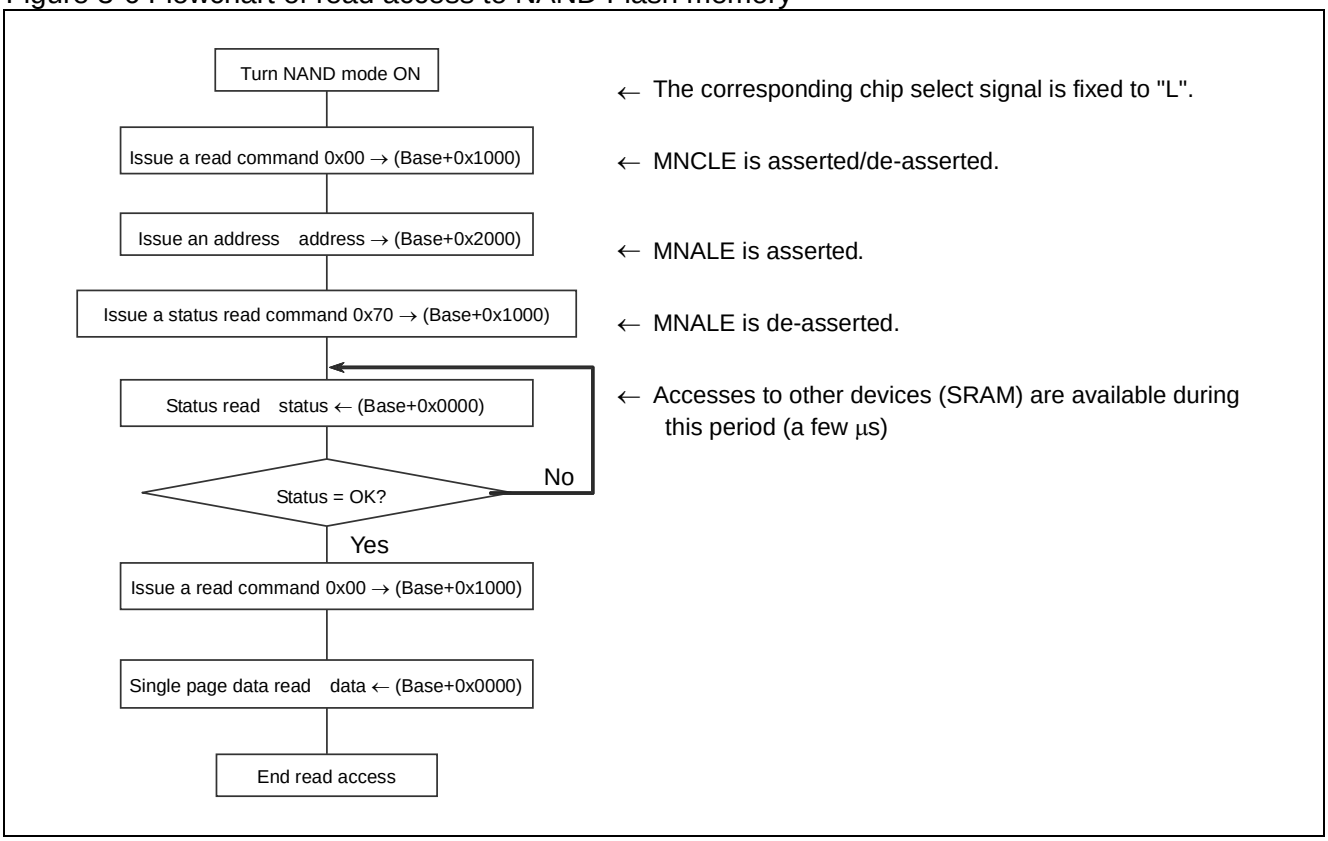

3.3.2. Write (auto program) access

Figure 3-7 shows the flowchart of the write (auto program) access.

Figure 3-7 Write (auto program) access flowchart

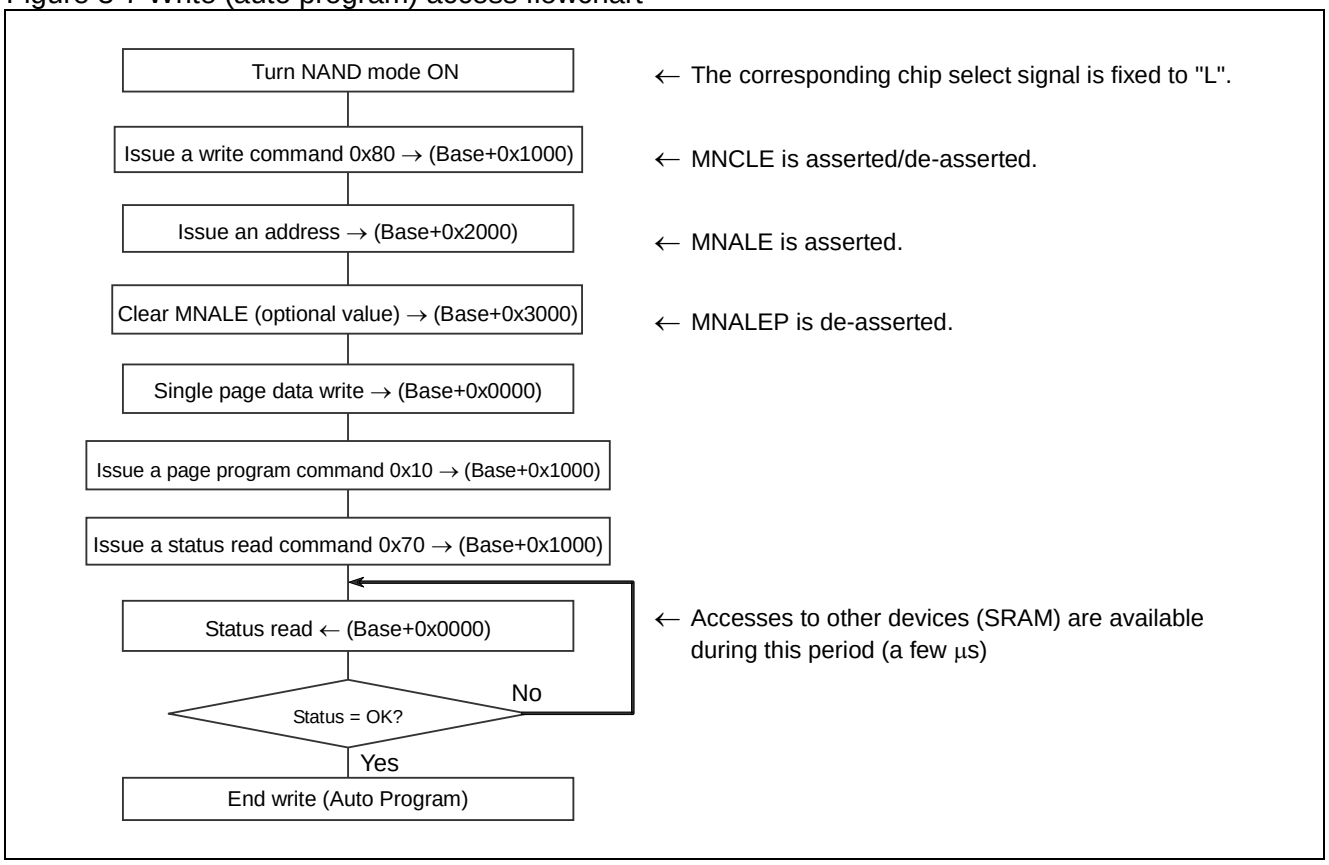

3.3.3. Auto block erase access

Figure 3-8 shows the flowchart of the auto block erase access.

Figure 3-8 Auto block erase access

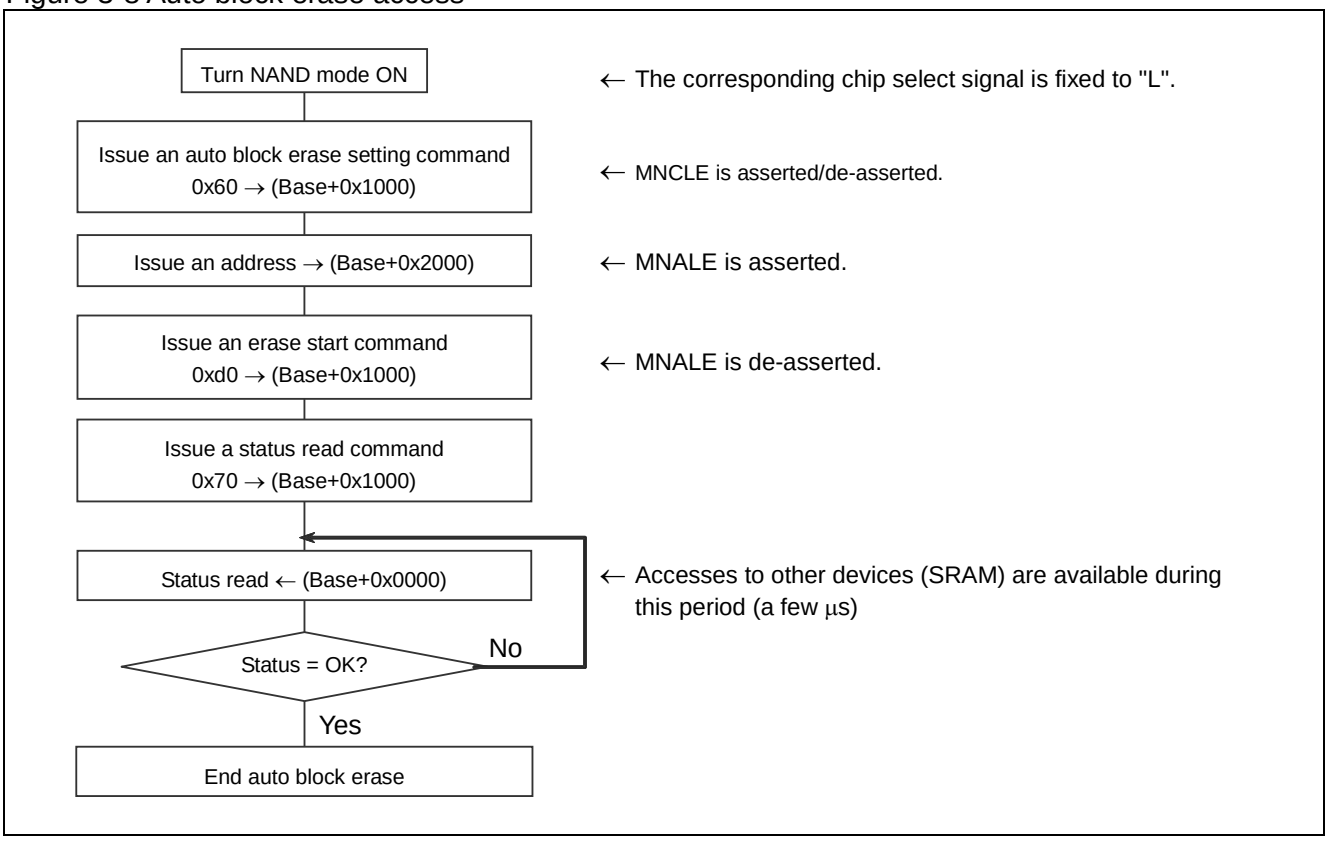

As shown in the above flowchart, access to another memory device is possible even in the stage where the process of accessing NAND Flash memory has not finished. Because reading or writing data can be substituted by DMA, the processor can access the NAND Flash memory with minimum operations.

3.4. Issue of an 8-bit NAND Flash memory read/write command

Figure 3-9 shows waveforms of the issue of an 8-bit NAND Flash memory read/write command (byte access).

Figure 3-9 Waveforms of the issue of an 8-bit NAND Flash memory read/write command

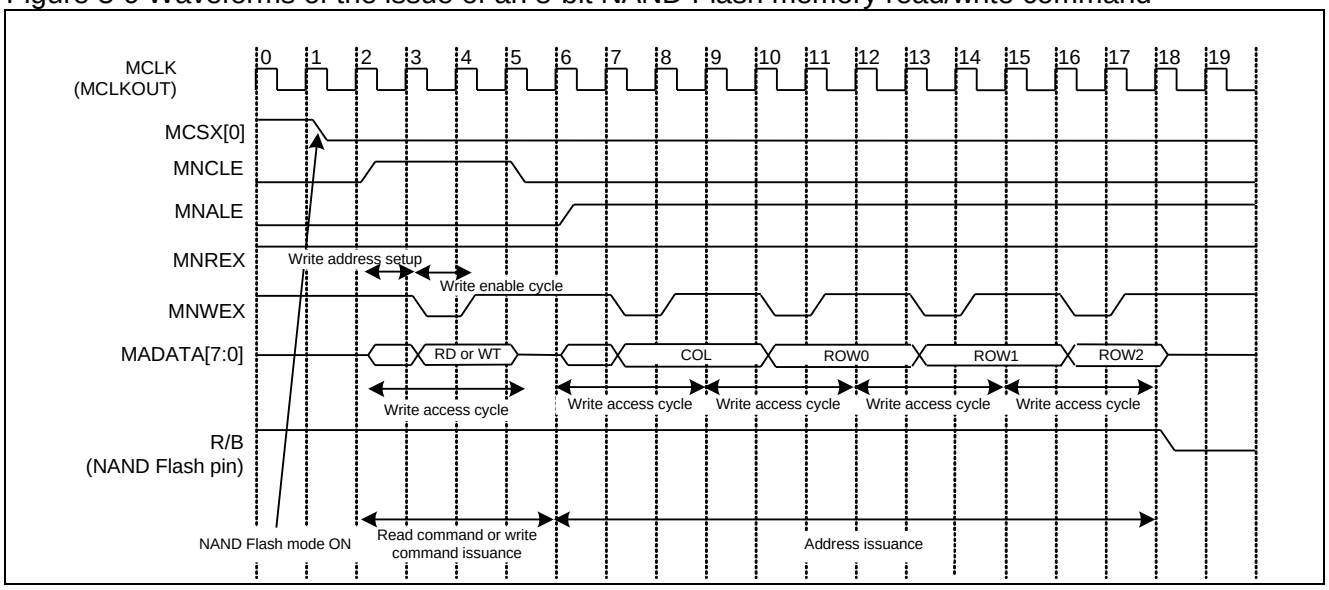

3.5. 8-bit NAND Flash memory status read

Figure 3-10 shows waveforms of an 8-bit NAND Flash memory status read (byte access).

Figure 3-10 Waveforms of an 8-bit NAND Flash memory status read

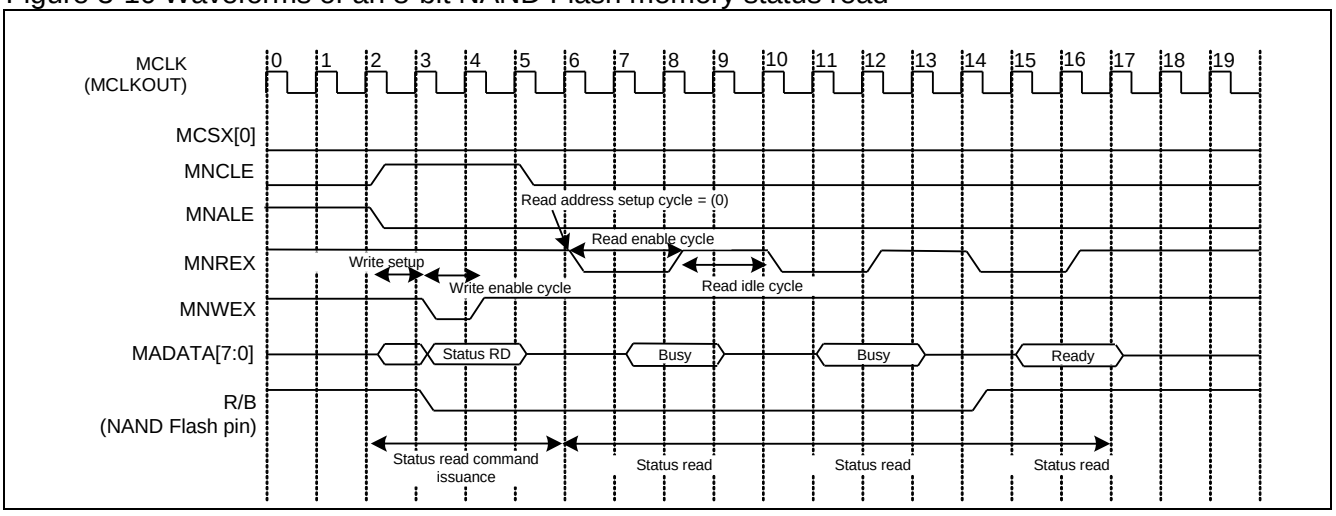

3.6. 8-bit NAND Flash memory data write

Figure 3-11 shows waveforms of an 8-bit NAND Flash memory data write.

Figure 3-11 8-bit NAND Flash memory data write

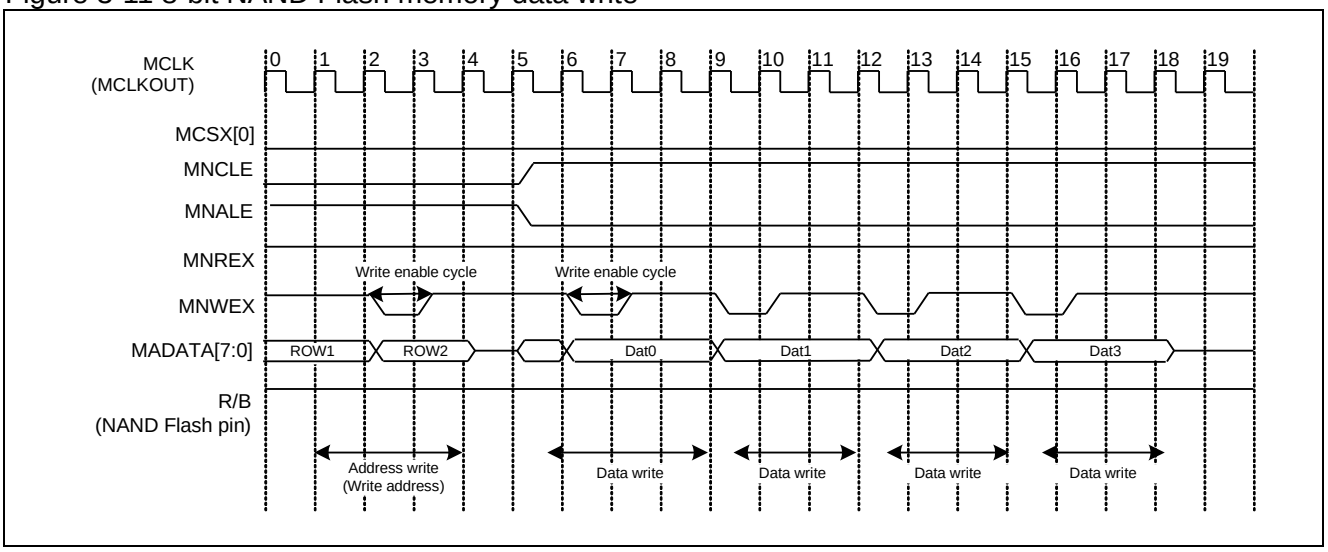

3.7. Automatic Wait Setup

The following explains the automatic wait function.

The automatic wait function sets an automatic wait time per MCSX area for external accesses with the register setups. The parameters to which the automatic wait can be set are shown in Table 3-6. Figure 3-12 through Figure 3-16 show specific examples where the automatic wait is assigned.

Table 3-6 Automatic Wait Setup List

Available point	Register name	Available cycle	Supplement
Number of cycles from access start to ALE output and address output start	ATIMn:ALES	0 to 15 cycles (ALES) Cycle	Multiplex mode only
ALE output width	ATIMn:ALEW	1 to 16 cycles (ALEW+1) Cycle	Multiplex mode only
Period from access start to address output end	ATIMn:ALC	1 to 16 cycles (ALC+1) Cycle	Multiplex mode only
Number of cycles until the MOEX↓ after ALC period is ended	TIMn:RADC	0 to 15 cycles (RADC) Cycle	
CS effective period in read cycle	TIMn:RACC	1 to 16 cycles (RACC+1) Cycle	
Number of idle cycles after read	TIMn:RIDLC	1 to 16 cycles (RIDLC+1) Cycle	
Number of first read address waiting cycles at page read access	TIMn:FRADC	0 to 15 cycles	Only PAGE=1 and MOEXEUP=0
Number of cycles while MOEX is low		1 to 16 cycles (FRADC+1) Cycle	Only PAGE=0 and MOEXEUP=1
Number of cycles until the MWEX↓ after ALC period is ended	TIMn:WADC	1 to 15 cycles (WADC+1) Cycle	
Number of cycles while MWEX is low	TIMn:WWEC	1 to 15 cycles (WWEC+1) Cycle	
CS effective period in write cycle	TIMn:WACC	3 to 16 cycles (WACC+1) Cycle	
Number of idle cycles after write	TIMn:WIDLC	1 to 16 cycles (WIDLC+1) Cycle	

Figure 3-12 Chart Description for Automatic Wait Assignment (Separate Mode)

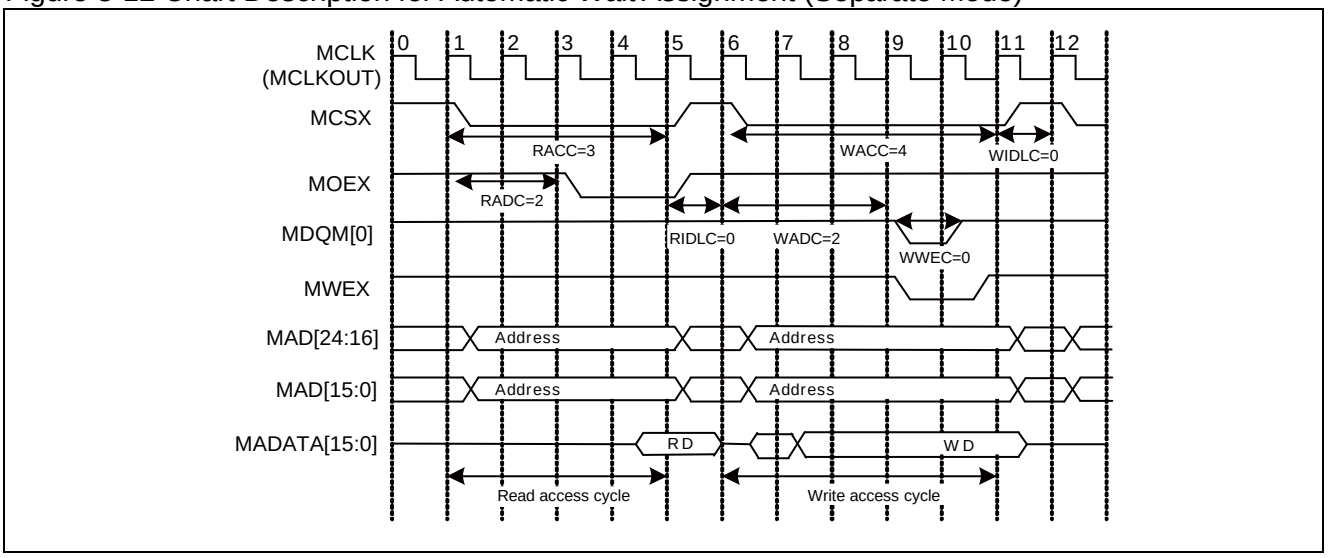

Figure 3-13 Chart Description for Automatic Wait Assignment (Multiplex Mode)

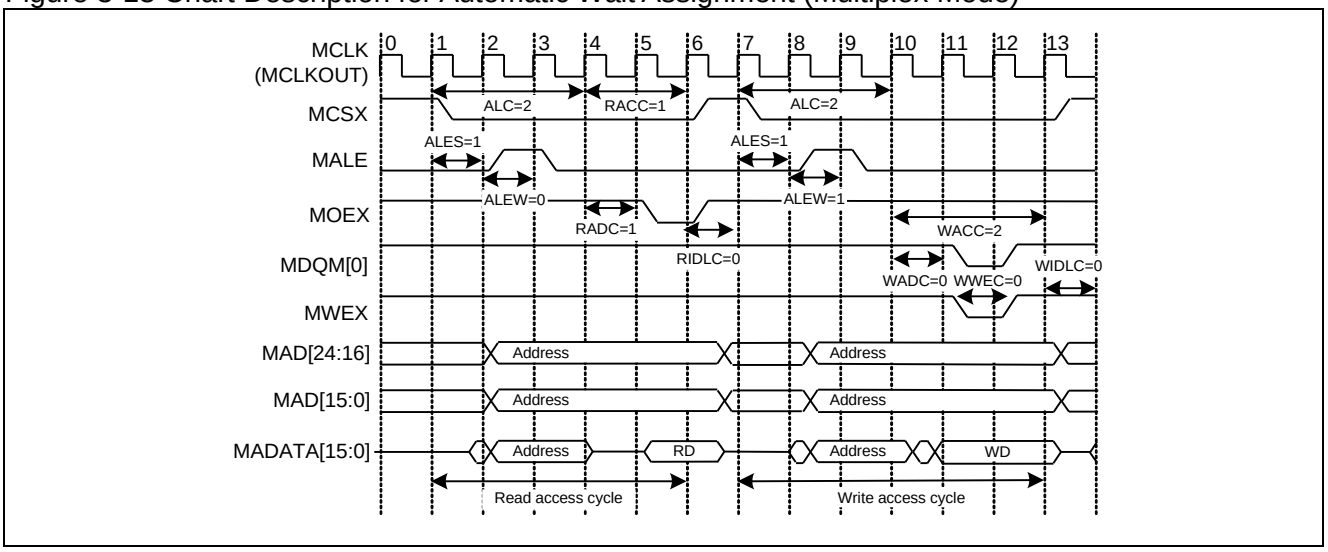

Figure 3-14 Chart Description for Automatic Wait Assignment (NAND Flash Memory Mode)

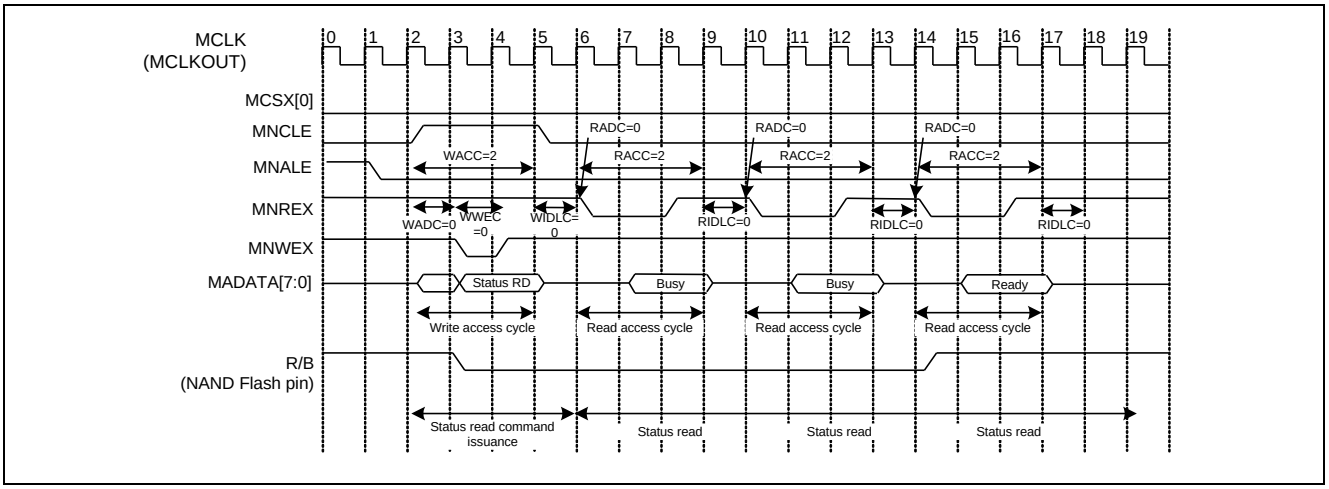

Figure 3-15 Chart Description for Automatic Wait Assignment (NOR Flash Memory Page Read)

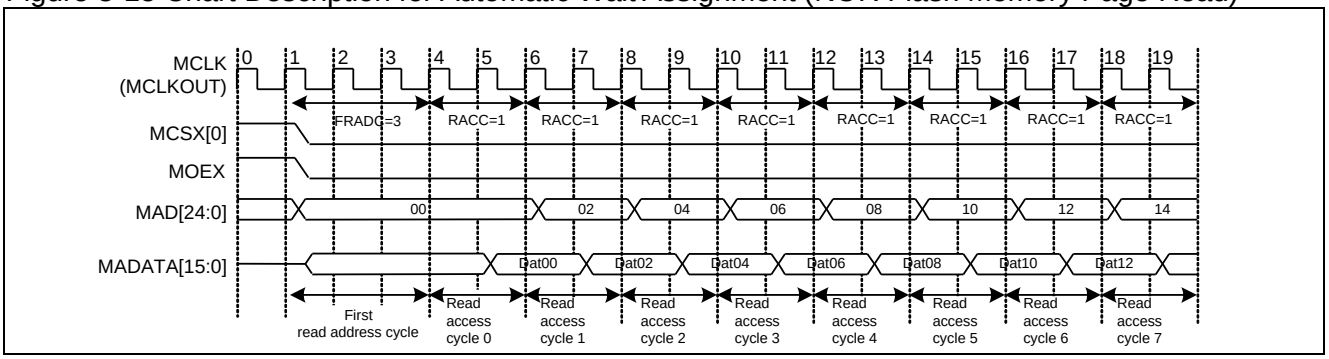

Figure 3-16 Chart Description for Automatic Wait Assignment (SRAM Continuous Read)

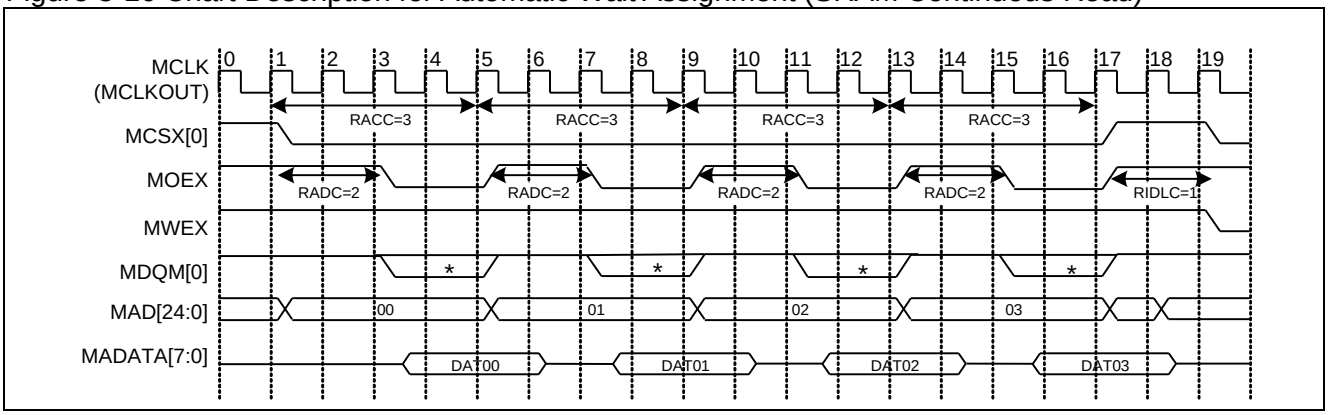

<Notes>

- The automatic wait setup will be enabled for all the access modes of external bus interface except for ATIMn:ALES, ALC and ALEW. The setups for the read data and write data must meet the setup and hold specifications.
- One or more cycles must be placed for address hold cycle while in asynchronous accessing.
- One or more cycles must be provided for data hold cycle while in asynchronous SRAM accessing.

3.8. External RDY

The following explains the external RDY function.

This function allows extended access cycle inserting wait cycles while "L" level is input to the MRDY pin. This enables accesses to the low speed external memories. The operation waveform of the RDY signal is shown in Figure 3-17.

Figure 3-17 Operation of External RDY

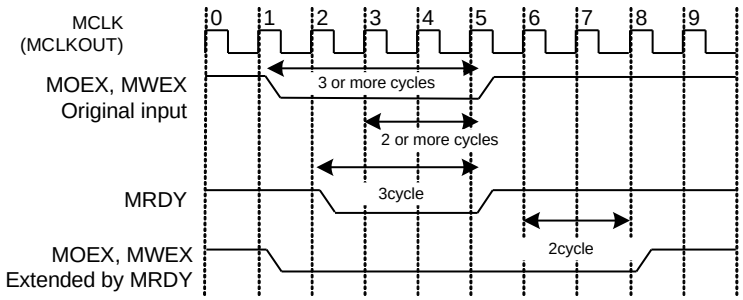

<Notes>

- When you use the external RDY function, set the widths for MOEX and MWEX to 3 or more cycles.
- In order to enable RDY function, MRDY=L must be input 2 cycles before MOEX↑/MWEX↑. The MRDY=L less than 2 cycles will be ignored.
  See "Data Sheet" of product used for details of AC specifications.
- MOEX↑/MWEX↑ will be performed 2 cycles after MRDY=H.
- Do not set MRDY=L until MOEX↑/MWEX↑ when MRDY=H is set once.
- The external RDY function will not be available in NOR Flash memory page read and NAND Flash memory modes.
- The periods of ALC and ALE will not be extended even if MRDY=L is set.

4. Connection Examples

This section provides an example of connections with external devices.

■ 256-Kword × 8-bit SRAM

Figure 4-1 shows an example of connecting a 256-Kword × 8-bit SRAM for accessing with 8-bit width.

Figure 4-1 Example of 256-Kword × 8-bit SRAM connection

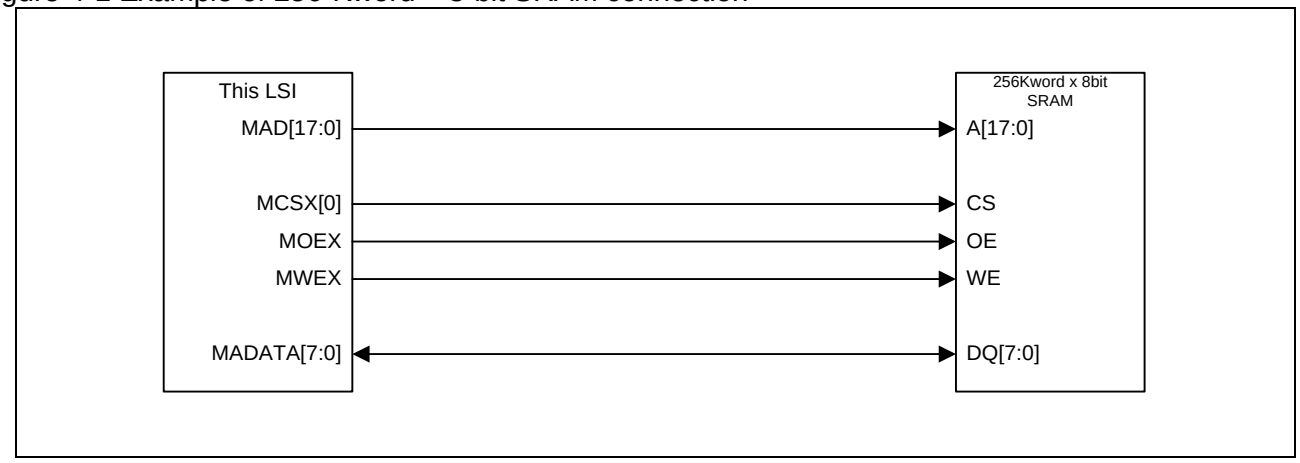

■ 128-Kword × 8-bit SRAM × 2

Figure 4-2 shows an example of connecting two 128-Kword × 8-bit SRAMs for accessing with 16-bit width.

Figure 4-2 Example of 128-Kword × 8-bit SRAM x 2 connection

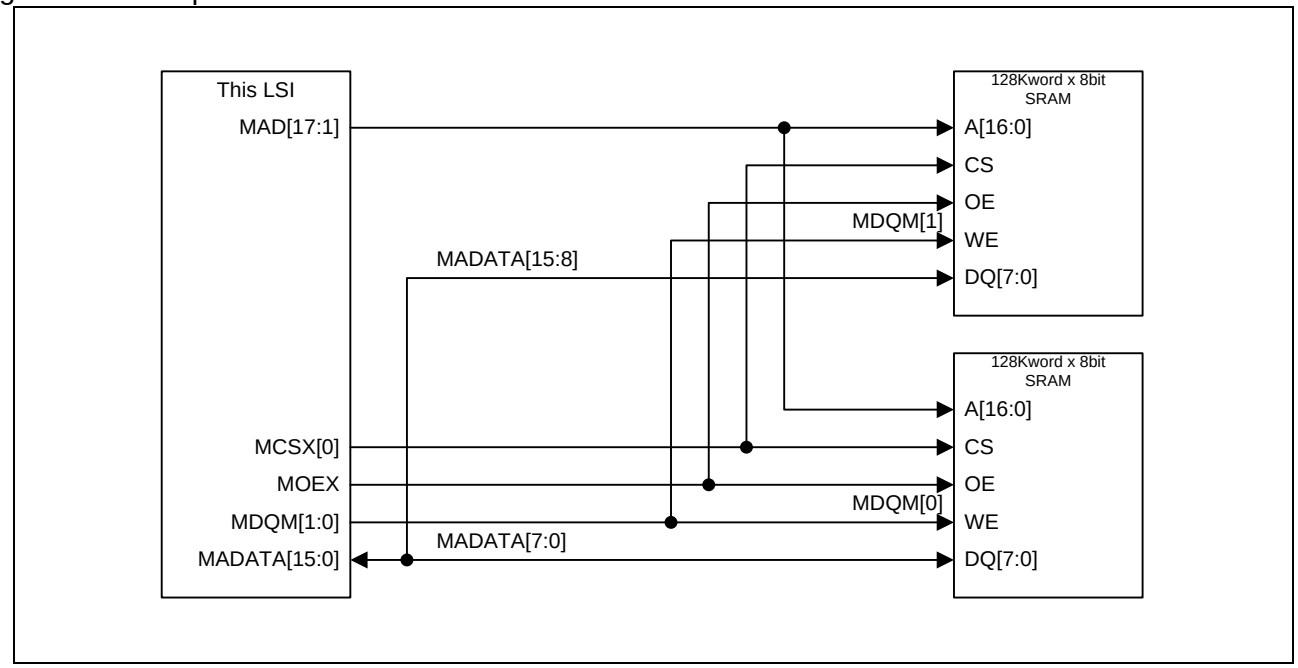

The MDQM signal can be used as a write enable for the devices without input mask feature.

■ 256-Kword ×16-bit SRAM

Figure 4-3 shows an example of connecting a 265-Kword × 16-bit SRAM for accessing with 16-bit width.

Figure 4-3 Example of 265-Kword × 16-bit SRAM connection

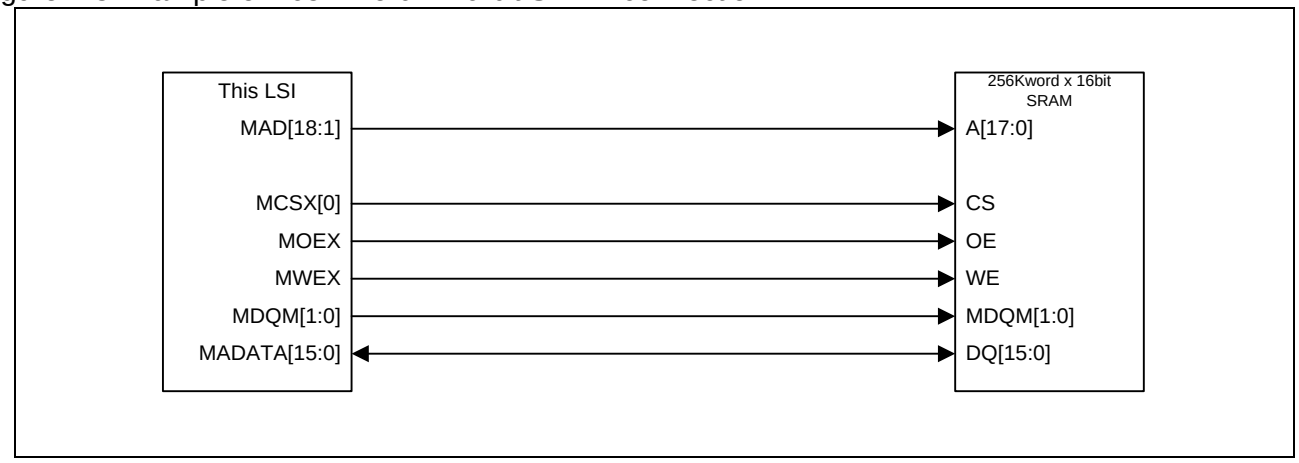

In the case where a target device employs a byte mask signal, using the MDQM control will read the data only required for the device. This resulted in reducing the power consumption while accessing.

■ N-word × 8-bit NAND

Figure 4-4 shows an example of connecting an N-word × 8-bit NAND Flash memory for accessing with 8-bit width.

Figure 4-4 Example of N-word × 8-bit NAND Flash memory connection

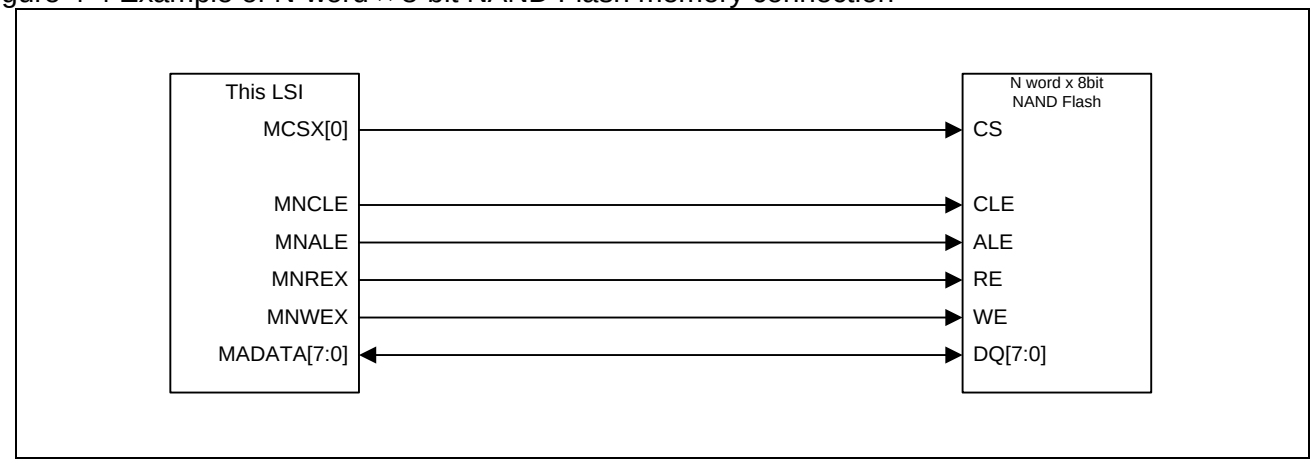

■ 32-Kword × 16-bit SRAM Multiplex Mode

Figure 4-5 shows an example of 32-Kword × 16-bit SRAM connection for accessing with 16-bit width (in multiplex mode).

Figure 4-5 Example of 32-Kword × 16-bit SRAM Multiplex Mode Connection

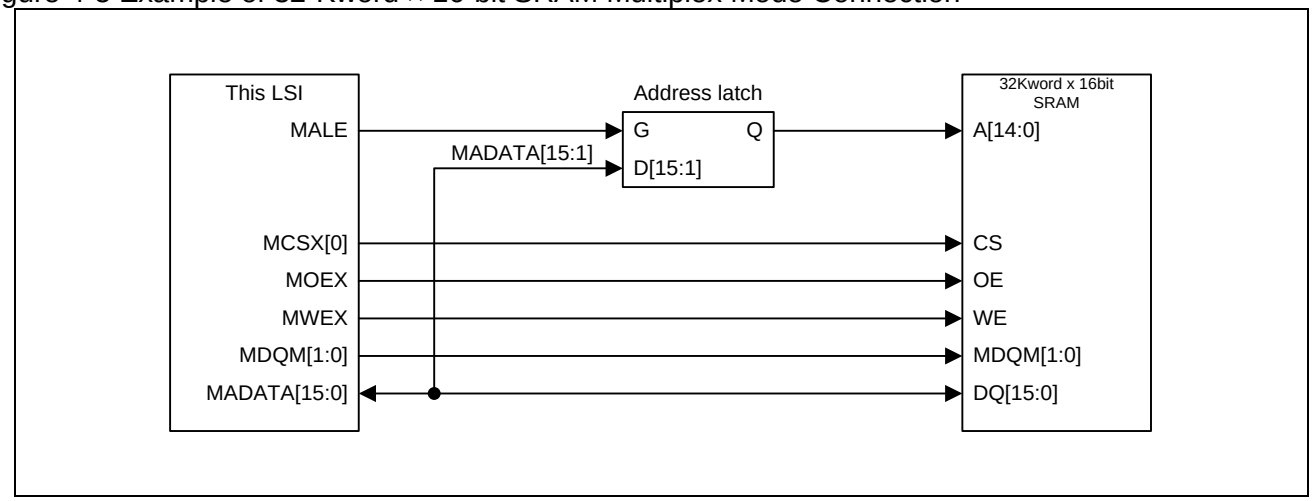

■ 32-Kword × 8-bit SRAM Multiplex Mode

Figure 4-6 shows an example of connecting two 32-Kword × 8-bit SRAMs for accessing with 16-bit width (in multiplex mode).

Figure 4-6 Example of 32-Kword × 8-bit SRAM × 2 Multiplex Mode Connection

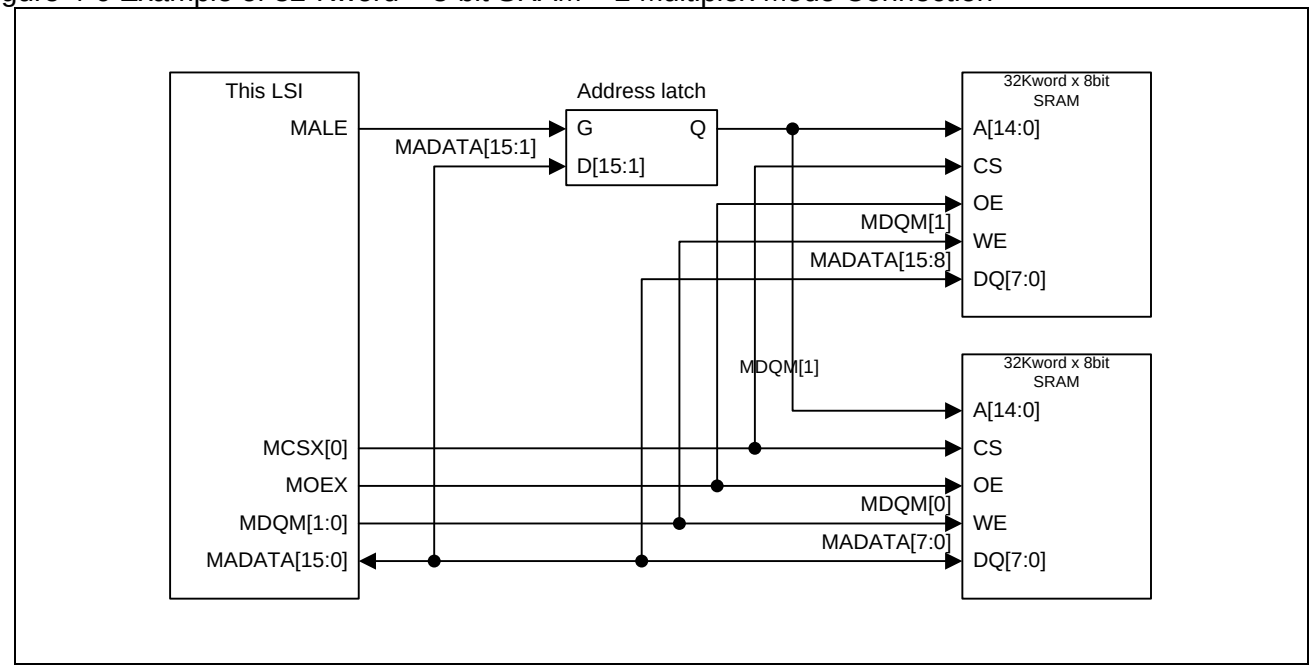

5. Setup Procedure Example

The following explains an example of the external bus interface setup procedure.

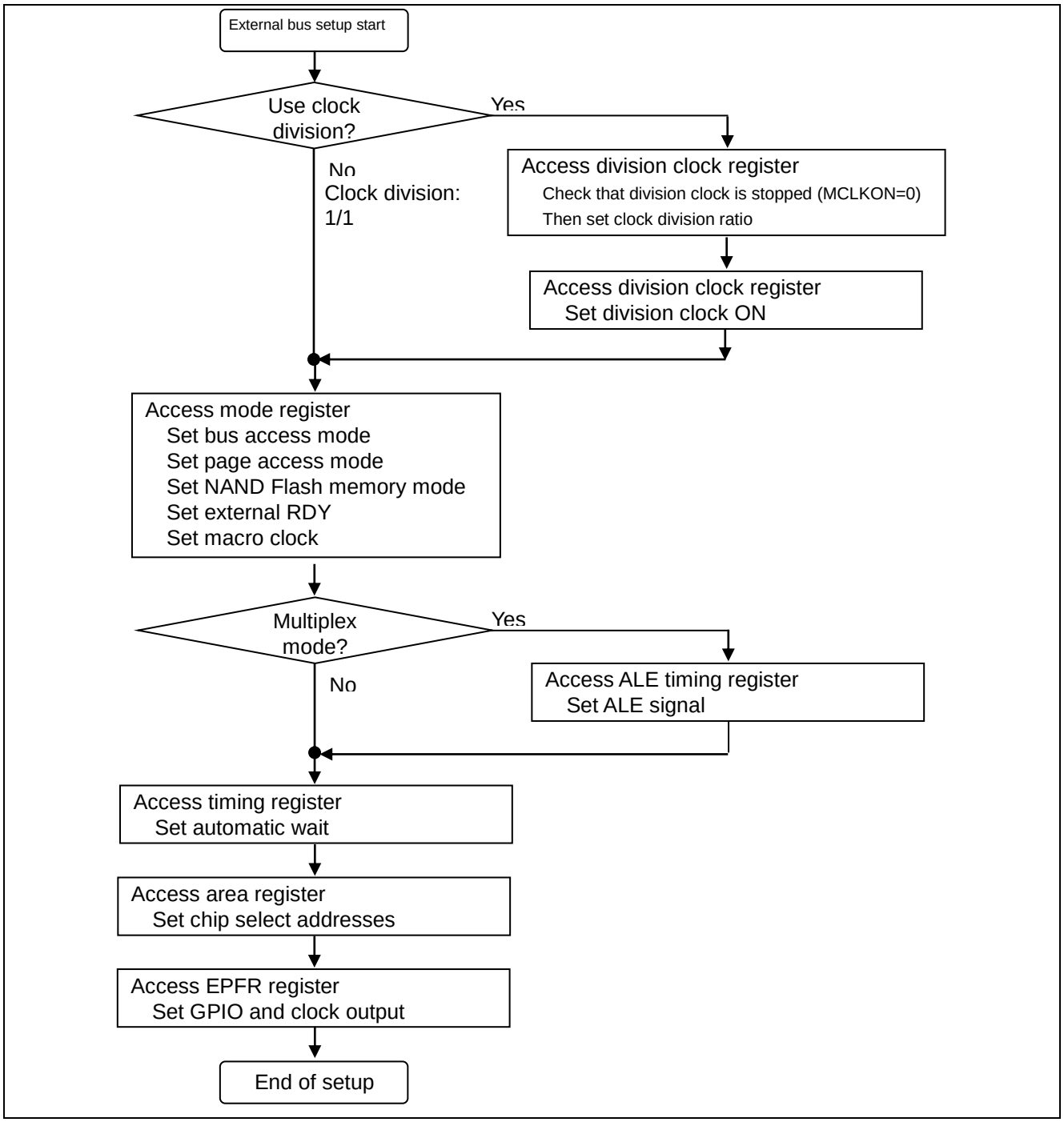

<Notes>

- Make sure to set up the division clock while the division clock is stopped.
- Some of setup combinations in the mode register cannot be used at the same time.

6. Registers

This section explains the configuration and functions of registers used for the external bus interface.

The following explains the registers used for the external bus interface. The bit width of every register is 32. Each register can be accessed by the APB interface with 32-bit width (word). Write "0" to reserved areas.

These registers can be rewritten while in external accessing. Actual setup value reflection will be made after current access is complete. Reading register before this reflection will read the previous setup value.

Table 6-1 lists the registers.

Table 6-1 Register list

Abbreviation	Register name	Reference
MODE0 to MODE7	Mode Register 0 to Mode Register 7	6.1
TIM0 to TIM7	Timing Register 0 to Timing Register 7	6.2
AREA0 to AREA7	Area Register 0 to Area Register 7	6.3
ATIM0 to ATIM7	ALE Timing Register 0 to 7	6.4
DCLKR	Division Clock Register	6.5

6.1. Mode Register 0 to Mode Register 7 (MODE0 to MODE7)

The following shows the configuration of the MODE0 to MODE7. [bit13:6] are not available for TYPE0 product.

bit	31	30	29	28	27	26	25	24
Field	Reserved							
Attribute	-							
Initial value	-							

bit	23	22	21	20	19	18	17	16
Field	Reserved							
Attribute	-							
Initial value	-							

bit	15	14	13	12	11	10	9	8
Field	Reserved		MOEXEUP	MPXCSOF	MPXDOFF	Reserved	ALEINV	MPXMODE
Attribute	-		R/W	R/W	R/W	-	R/W	R/W
Initial value	-		0	0	0	-	0	0

bit	7	6	5	4	3	2	1	0
Field	SHRTDOUT	RDY	PAGE	NAND	WEOFF	RBMON	WDTH	
Attribute	R/W	R/W	R/W	R/W	R/W	R/W	R/W	
Initial value	0	0	0	0	0	0	0*	0*

*: The initial value of these bits is "01" only for MODE4 register.

[bit31:14] Reserved : Reserved bits

The read value is undefined.

Set this bit to "0" when writing.

■ Products other than TYPE0

[bit13] MOEXEUP

This bit is used to select how to set the MOEX width.

Value	Description
0	MOEX width is set with RACC-RADC (Initial value).
1	MOEX width is set with FRADC.*

* This function cannot be used combined with the page read function.

(Note) See "■Reference Information" in the latter part of this section for specific operations.

[bit12] MPXCSOF

This bit is used to select a CS assertion from the start of accessing to the end of address output (ALC cycle period) in multiplex mode.

Value	Description
0	Asserts MCSX in ALC cycle period (Initial value).
1	Does not assert MCSX in ALC cycle period .

(Note) See "■Reference Information" in the latter part of this section for specific operations.

[bit11] MPXDOFF

This bit is used to select whether or not the address is output to the data lines in multiplex mode.
(The address is used from the MAD outputs but set this bit if you use the ALE signal.)

Value	Description
0	Outputs the address to the data lines (Initial value).
1	Does not output the address to the data lines (It becomes Hi-Z during ALC period).

(Note) See "■Reference Information" in the latter part of this section for specific operations.

[bit10] Reserved : Reserved bit

The read value is undefined.
Set this bit to "0" when writing.

[bit9] ALEINV

This bit is used to set up the polarity of the ALE signal.

Value	Description
0	ALE signal becomes positive polarity (Initial value).
1	ALE signal becomes negative polarity.

(Note) When you connect multiple devices and use the ALE signal, it is recommended to use same polarity for their ALE signals.

[bit8] MPXMODE

This bit is used to select operation bus mode.

Value	Description
0	Selects separate mode (Initial value).
1	Selects multiplex mode.

[bit7] SHRTDOUT

This bit is used to select to which idle cycle the write data output is extended.

Value	Description
0	Extends the write data output to the last idle cycle (Initial value).
1	Stops the write data output at the first idle cycle.

(Note) See "■Reference Information" in the latter part of this section for specific operations.

[bit6] RDY

This bit is used to control the external RDY function.

Value	Description
0	External RDY mode OFF (Initial value)
1	External RDY mode ON

■ TYPE0 products

[bit13:6] Reserved

The read value is undefined.
Set this bit to "0" when writing.

■ All products

[bit5] PAGE (PAGE access mode): NOR Flash memory page access mode

This bit controls the mode of NOR Flash memory page access.

In NOR Flash memory page access mode, the first read access cycle (FRADC) setting can generate the first address cycle. Subsequently, the read access cycle (RACC) setting can continue the access until it reaches the 16-byte boundary.

When you select NOR Flash memory page access mode, set the RBMON bit to "0" and the read access cycle (RADC) to "0".

Value	Description
0	NOR Flash memory page access mode is turned OFF (Initial value)
1	NOR Flash memory page access mode is turned ON

[bit4] NAND: NAND Flash memory mode

This bit controls the mode used to connect with a NAND Flash memory.

To enable the access to a NAND Flash memory, set this bit to "1".

In NAND Flash memory mode, the corresponding MCSX is fixed to LOW and, subsequently, the pin dedicated to the NAND Flash memory is used during the access. If this bit is set to "0" while the NAND Flash memory is unused, then MCSX is fixed to HIGH, enabling the NAND Flash memory to maintain a low power consumption state.

Value	Description
0	NAND Flash memory mode is turned OFF (Initial value)
1	NAND Flash memory mode is turned ON

[bit3] WEOFF (WEX OFF): Write Enable OFF

This bit can disable the write enable signal (MWEX) operation.

When the byte mask signal (MDQM) is used as a device write enable signal, disabling unnecessary MWEX operation can reduce power consumption. When this bit is set to disable, MWEX is fixed to HIGH.

Value	Description
0	Enable [Initial value]
1	Disable

[bit2] RBMON: Read Byte Mask ON

This bit can enable the byte mask signal (MDQM) for read access.

The setting controls the output of unnecessary data from a device for which the byte mask signal is enabled. This is helpful to reduce power consumption.

Value	Description
0	Disable [Initial value]
1	Enable

[bit1:0] WDTH: Data Width

These bits specify the data bit width of a device to be connected.

bit1	bit0	Description
0	0	8 bits [Initial value]
0	1	16 bits
1	0	Setting is prohibited.
1	1	Setting is prohibited.

(Note) The initial value of these bits becomes "01" only for MODE4 register.

<Notes>

- If you write a disabled value to the WDTH bit, the operation of the external bus interface is not guaranteed.
- The NAND Flash memory mode may not be used by some of products as the NAND Flash control pin is not output. See the data sheets of products used for the details.
- bit13:6 are not available in the TYPE0 products.
- Always write "0" when you make write to the reserved bits. The read value from the reserved bit is undefined.

■ Reference Information

Specific effects and operations are shown as follows by setting the bits of this register.

● MOEXEUP bit: MOEX Width Setup

How to set up the MOEX width depends on the MOEXEUP bit setup.

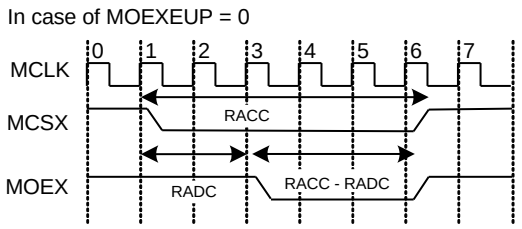

MOEX width is determined with (RACC-RADC).

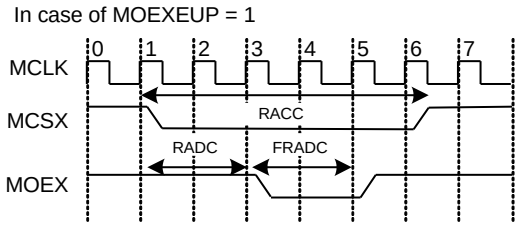

MOEX width is determined with FRADC.

The following is the summary of MOEX width setups with page read setups and MOEXEUP setups.

	MOEXEUP=0	MOEXEUP=1
Page read: OFF	MOEX width => RACC-RADC (Note) Setup meeting RACC > RADC is required.	MOEX width => FRADC (Note) Setup meeting RACC ≥ RADC + FRADC is required.
Page read: ON	MOEX width => Simultaneous assertion with MCSX (Note) Setup meeting RADC=0 is required.	Not allowed

MPXCSOF bit: CS Assert Timing Setup

This bit is used to select MCSX assertion in multiplex mode from the start of accessing to the end of address output complete (ALC period).

In case of MPXCSOF = 0

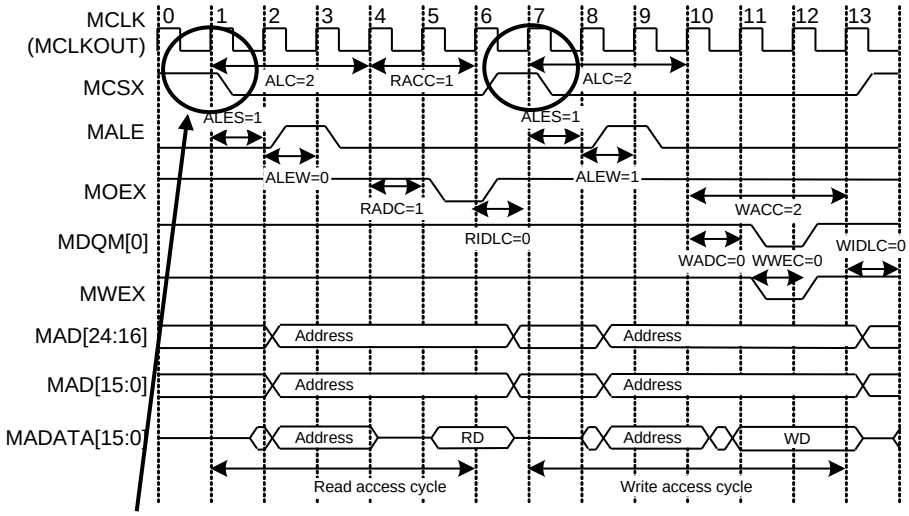

MCSX is asserted at the beginning of ALC period.

In case of MPXCSOF = 1

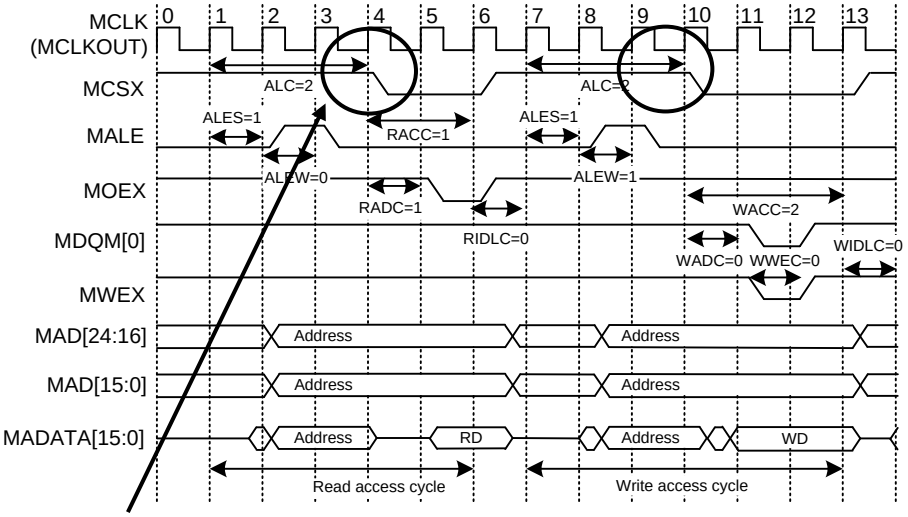

MCSX is asserted after the ALC period is completed.

Setting MPXCSOF=1 means that the MCSX assertion becomes the "address latch".
Therefore, it is enabled if address change is detected by change of MCSX.

● SHRTDOUT bit: Write Data Retention Time in Idle Cycle

The WIDLC setup will extend the idle cycle.
The write data at that time will also be extended same as the specified period to become Hi-Z in the last cycle.

In case where WIDLC=0 and SHRTDOU=0

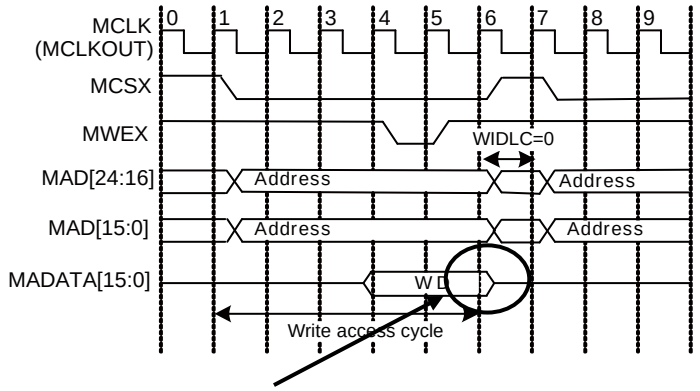

The idle cycle is one cycle. The idle cycle will stop the data output to become Hi-Z.

In case where WIDLC = 2 and SHRTDOUT = 0

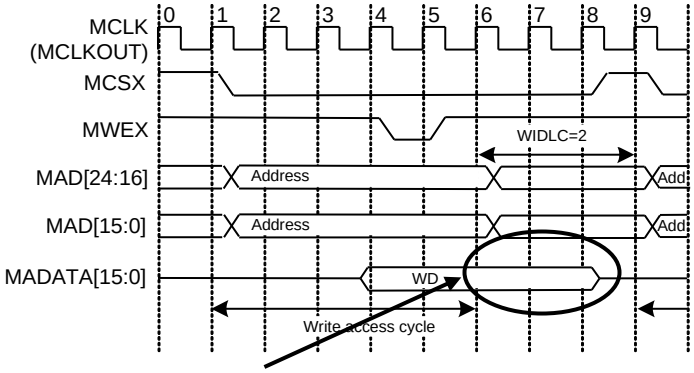

Extended idle cycle makes the data Hi-Z at the last cycle.

In case where WIDLC = 2 and SHRTDOUT = 1

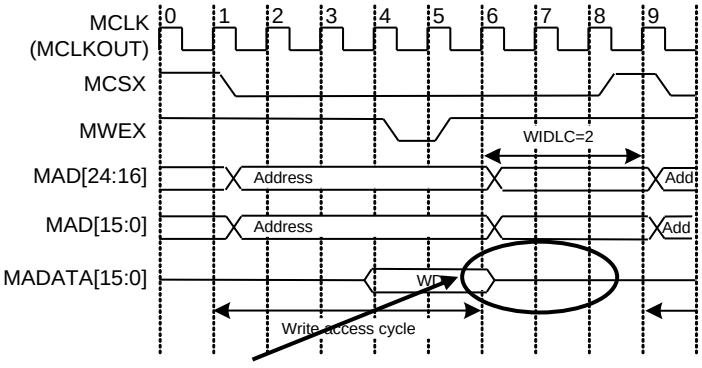

Setting SHRTDOUT=1 extended the idle cycle but the data will become Hi-Z at the beginning of the idle cycle.

MPXDOFF bit: Address Output Availability Setup for Data Line

This bit is used to select the address output availability for the data line in multiplex mode.

In case of MPXDOFF = 0

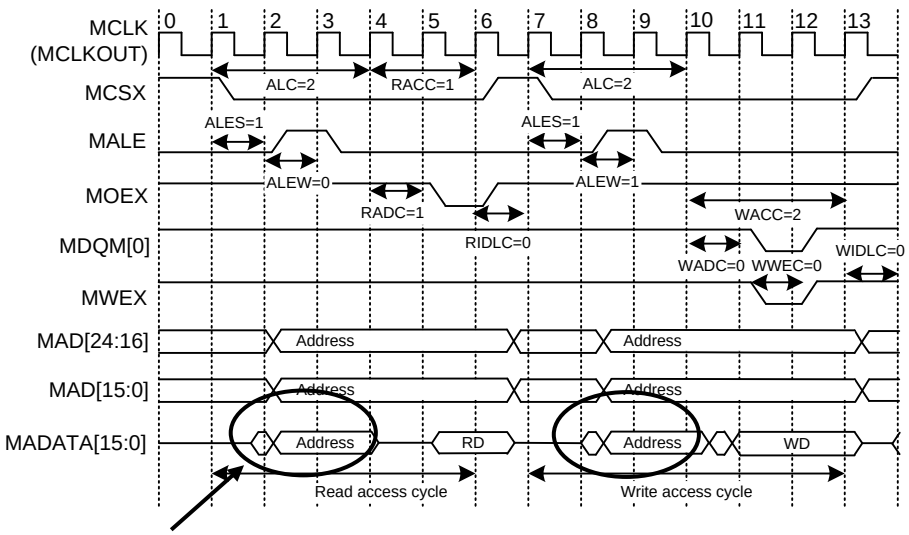

Address is output to the MADATA line during ALC period.

In case of MPXDOFF = 1

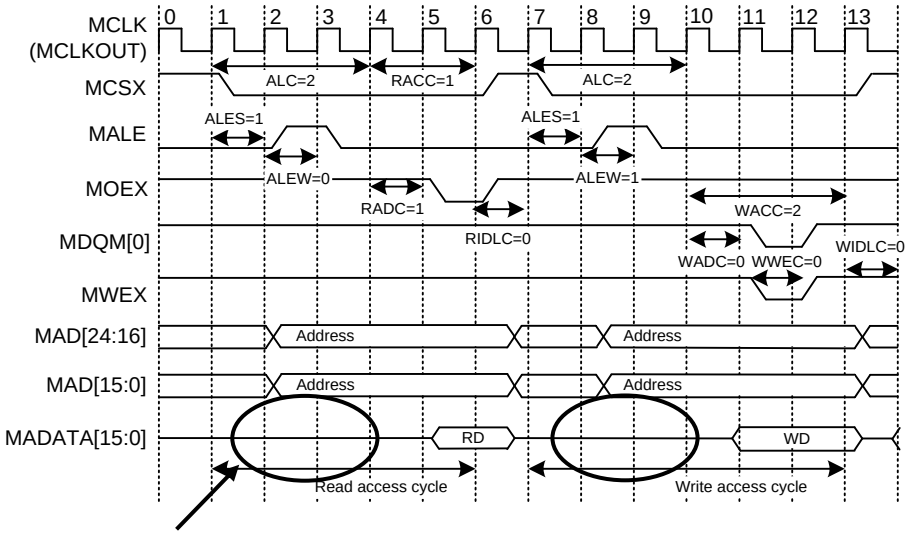

Address is not output to the MADATA line during ALC period.

In the case in multiplex mode where you want to use ALE signal only or you want to use the ALE signal but use the MAD for the address pins, it can be used by setting MPXDOFF=1.

6.2. Timing Register 0 to Timing Register 7 (TIM0 to TIM7)

The following shows the configuration of the TIM0 to TIM7.

bit	31	30	29	28	27	26	25	24	23	22	21	20	19	18	17	16
Field	WIDLC				WWEC				WADC				WACC			
Attribute	R/W				R/W				R/W				R/W			
Initial value	0000				0101				0101				1111			

bit	15	14	13	12	11	10	9	8	7	6	5	4	3	2	1	0
Field	RIDLC				FRADC				RADC				RACC			
Attribute	R/W				R/W				R/W				R/W			
Initial value	1111				0000				0000				1111			

[bit31:28] WIDLC: Write Idle Cycle

These bits set the number of idle cycles after write access.
Write idle cycle will be used during (WIDLC+1) cycle.

Value	Description
0000	1 cycle [Initial value]
⋮	⋮
1111	16 cycles

[bit27:24] WWEC: Write Enable Cycle

These bits set the number of assert cycles of write enable.
Write enable will be asserted during (WWEC+1) cycle.

The setting of these bits affects the byte mask signal (MDQM).

Value	Description
0000	1 cycle
⋮	⋮
0101	6 cycles [Initial value]
⋮	⋮
1110	15 cycles
1111	Setting is prohibited.

[bit23:20] WADC: Write Address Setup cycle

These bits set the number of setup cycles of write address.
Write address setup will be used during (WADC+1) cycle.

The address is output during the cycle set by these bits, but a write enable signal is not asserted until the set cycle starts.

Value	Description
0000	1 cycle
⋮	⋮
0101	6 cycles [Initial value]
⋮	⋮
1110	15 cycles
1111	Setting is prohibited.

[bit19:16] WACC: Write Access Cycle

These bits set the number of cycles required for write access.
Write access cycle will be used during (WACC+1) cycle.

The address remains unchanged during the cycle set by these bits.

The number of cycles set by these bits must be equal to or more than the sum of the address setup cycle (WADC) and the write enable cycle (WWEC).

Value	Description
0000	Setting is prohibited.
0001	Setting is prohibited.
0010	3 cycles
⋮	⋮
1111	16 cycles [Initial value]

[bit15:12] RIDLC: Read Idle Cycle

These bits set the number of idle cycles after read access.
Read access cycle will be used during (RIDLC+1) cycle.

They are used to avoid data collision caused by a write access occurring immediately after a read access.

Value	Description
0000	1 cycle
⋮	⋮
1111	16 cycles [Initial value]

[bit11:8] FRADC: First Read Address Cycle

The functions of these bits are changed by the settings of MODE:PAGE (Page read access setting) and MOEXEUP (MOEX width setting method selection).

- When MODE:PAGE=0 (Page read access: OFF) and MOEXEUP=0
  These bits do not affect the settings of Page read access and MPEX width.
- When MODE:PAGE=0 (Page read access OFF) and MOEXEUP=1
  These bits set the MOEX width. In this case, a setup with RACC ≥ RADC+FRADC is required.

Value	Description
0000	1 cycle [Initial value]
⋮	⋮
1111	16 cycles

- When MODE:PAGE=1 (Page read access: ON) and MOEXEUP=0
  These bits set the waiting time at initial access at the page read access of Flash memory. Before setting values other than "0" to these bits, set "0" to RADC (Read Access Setup Cycle).

Value	Description
0000	0 cycle [Initial value]
⋮	⋮
1111	15 cycles

- When MODE:PAGE=1(Page read access: ON) and MOEXEUP=1
  This setting is prohibited.

<Note>

The MOEX width cannot be set for the TYPE0 products even if MODE.PAGE=0 (Page read access: OFF). The TYPE0 products cannot set MOEX width by these bits.

[bit7:4] RADC: Read Address Setup cycle

These bits set the number of setup cycles of read address.
Read address setup cycle will be used during (RADC) cycle.
Within the read address setup cycle, MCSX and address are asserted but MOEX is not asserted. If "0" is set to any of these bits, MOEX and MCSX are always asserted.
The set value must be less than the number of read access cycles. (RADC < RACC).
When using NOR Flash memory page access mode, set these bits to "0b0000".
If the access size is more than the target width, or if a device such as NAND Flash memory needs to switch HIGH and LOW of read enable (MOEX or MNREX), set these bits to "0b0001" or a higher value.

Value	Description
0000	0 cycles [Initial value]
⋮	⋮
1111	15 cycles

[bit3:0] RACC: Read Access Cycle

These bits set the number of cycles required for read access.
Read access cycle will be used during (RACC+1) cycle.

The address remains unchanged during the cycle specified by these bits, and the data is captured at the last cycle.

Value	Description
0000	1 cycle
⋮	⋮
1111	16 cycles [Initial value]

<Notes>

- If you write a disabled value to a WWEC, WADC or WACC bit, the operation of the external bus interface is not guaranteed.
- In NAND Flash memory read mode, the MNWEX and MNREX timings are set by the timing registers as is the case with MWEX and MOEX.

6.3. Area Register 0 to Area Register 7 (AREA0 to AREA7)

The following shows the configuration of the AREA0 to AREA7.

bit	31	30	29	28	27	26	25	24	23	22	21	20	19	18	17	16
Field	Reserved									MASK						
Attribute	-									R/W						
Initial value	-									0001111 (16MB width)						

bit	15	14	13	12	11	10	9	8	7	6	5	4	3	2	1	0
Field	Reserved								ADDR							
Attribute	-								R/W							
Initial value	-								00000000, 00010000, 00100000, 00110000, 01000000, 01010000, 01100000, 01110000 *1							

[bit22:16] MASK: address mask

These bits set the value to mask [26:20] of the internal address (27:20) set in ADDR.

If "1" is set as a mask value, the external bus interface masks each of the internal bus and ADDR according to the value, and compares the masking results. If the results are matched, the external bus interface accesses the MCSX signal.

A bit set to "1" for masking is lost during masking process. The bit is disabled even if it is set in ADDR.

The example shown in Table 6-2 indicates the relationship between the mask setup and the address area size.

Table 6-2 MASK Setup Value and Address Area per CS

MASK setup value	Address area per CS
111_1111	128MB
011_1111	64MB
001_1111	32MB
000_1111	16MB
000_0111	8MB
000_0011	4MB
000_0001	2MB
000_0000	1MB

[bit7:0] ADDR: Address

These bits specify the address to set the corresponding MCSX area.

The address is in the fixed 256 MB area assigned to the SRAM/Flash memory interface.

The address specified by bit7:0 corresponds to the internal address [27:20].

<Notes>

Address Space

- The external bus interface employs 256MB of address space.
- The address area for each chip select can be set freely to one MCSX with [27:20] up to 128MB and down to 1MB.
- The address areas of each chip select must not be overlapped.
- As the address output outside consists of 25 bits, the maximum size of address output outside becomes 32MB.

The address space on the memory map and initial state of the address space from each chip select are shown in Figure 6-1.

Figure 6-1 Address Space and Initial Configuration for External Bus Interface

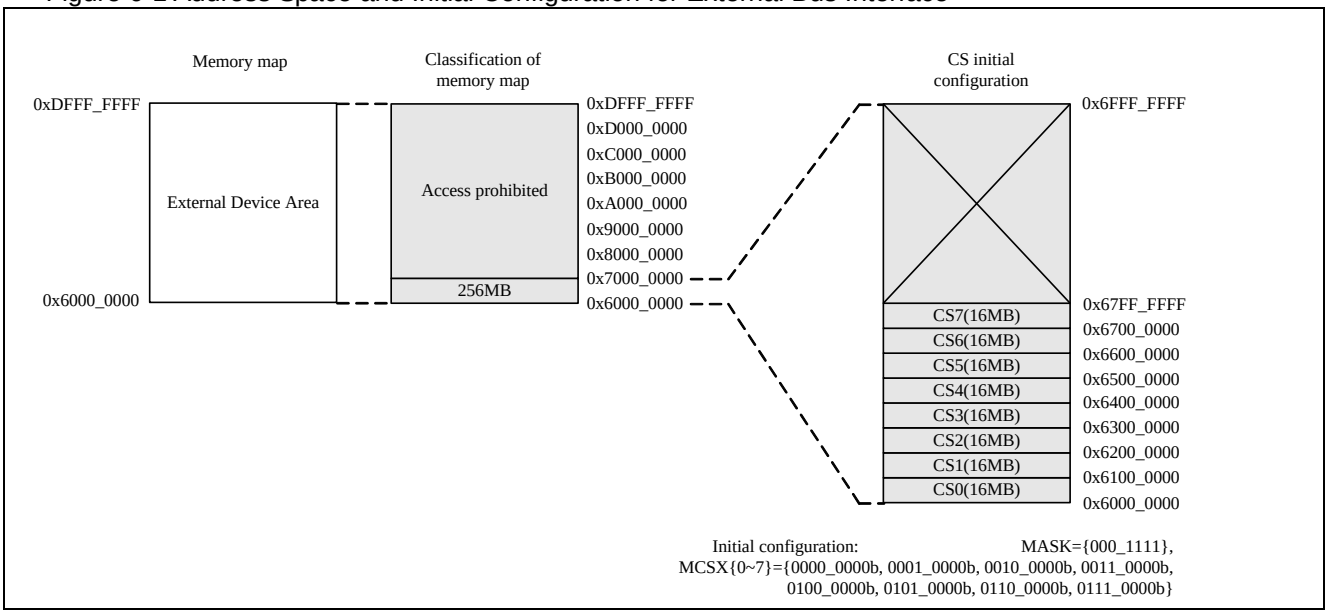

If undefined MCSX is accessed, the operation of the external bus interface cannot also be guaranteed.

Setup Example

ADDR = 0b0001_0000 ([27:20] of the first MCSX address. 0x6100_0000 in this setup.)
MASK = 0b000_0011 (Mask bits [26:20] for MCSX. Address area for this setup: 4MB.)

Select an area size with the mask setup values.
In the example, setup range 0x6100_0000 to 0x613F_FFFF (4MB) will be selected.

ADDR&(!MASK) = 0b0001_0000

- Device to be selected

  When the internal bus address (address for external I/F) AD = 0x6101_1000:
  0x6101_1000 -> 0b0110_0001_0000_0001_0001_0000_0000_0000

  AD[27:20] => 0b0001_0000

  Masking comparison
  ADDR & (!MASK) = 0b0001_0000
  AD [27:20] & (!MASK) = 0b0001_0000 ….. Matched. A device will be selected.

- Device not to be selected

  When the internal bus address (address for external I/F) AD = 0x60C0_0000:
  0x60C0_0000 -> 0b0110_0000_1100_0000_0000_0000_0000_0000

  AD[27:20] => 0b0000_1100

  Masking comparison
  ADDR & (!MASK) = 0b0001_0000
  AD [27:20] & (!MASK) = 0b0000_1100 …..Unmatched. No device will be selected.

6.4. ALE Timing Register 0 to 7 (ATIM0 to ATIM7)

The following shows the configuration of ATIM0 to ATIM7. This register is not available in the TYPE0 products.

bit	31	30	29	28	27	26	25	24	23	22	21	20	19	18	17	16
Field	Reserved															
Attribute	-															
Initial value	-															

bit	15	14	13	12	11	10	9	8	7	6	5	4	3	2	1	0
Field	Reserved				ALEW				ALES				ALC			
Attribute	-				R/W				R/W				R/W			
Initial value	-				0100				0101				1111			

[bit11:8] ALEW : Address Latch Enable Width

These bits are used to set the assertion period for MALE.
MALE signal will be asserted during (ALEW+1) cycle.

Value	Description
0000	1 cycle
⋮	⋮
0100	5 cycles [Initial value]
⋮	⋮
1111	16 cycles

[bit7:4] ALES : Address Latch Enable Setup cycle

These bits are used to set the setup cycle for ALE assertion.
ALE will not be asserted from the access start during (ALES) cycle.

Value	Description
0000	0 cycle
⋮	⋮
0101	5 cycles [Initial value]
⋮	⋮
1111	15 cycles

[bit3:0] ALC : Address Latch Cycle

These bits are used to set the address latch cycle.

Address will be output from CS assert and data line during (ALC+1) cycle.

Value	Description
0000	1 cycle
⋮	⋮
1111	16 cycles [Initial value]

<Notes>

- Setups to the ATIM register is available only in multiplex mode.
- This register is not available in the TYPE0 products.

6.5. Division Clock Register (DCLKR)

The following shows the configuration of DCLKR. This register is not available in the TYPE0 products.

bit	31	30	29	28	27	26	25	24	23	22	21	20	19	18	17	16
Field	Reserved															
Attribute	-															
Initial value	-															

bit	15	14	13	12	11	10	9	8	7	6	5	4	3	2	1	0
Field	Reserved								Reserved			MCLKON	MDIV			
Attribute	-								-			R/W	R/W			
Initial value	-								-			0	0001			

[bit4] MCLKON : MCLK ON

This bit is used to set MCLK division enable.

Value	Description
0	MCLK will be fixed to 1 division independent of MDIV value (Initial value).
1	MDIV value will be used for MCLK division.

[bit3:0] MDIV: MCLK Division Ratio Setup

These bits are used to set the division ratio of the division clock.

The division clock will be divided into (MDIV+1) division.

Value	Description
0000	1 division
0001	2 division (Initial value)
⋮	⋮
1111	16 division

<Notes>

- When you want to output the division clock, clock output setup is required with the use of GPIO.
  See a separate chapter "I/O Port" for the details of the setups.
  To output the clock, set MCLKON=1.
- When the clock frequency is set to output by dividing the frequency by one, set MCLKON=1, MDIV=0000.
  In this case, check "External bus clock output Characteristics" in Data sheet.
- When you change the division ratio, make sure to set MCLKON=0 before change the MDIV.
- Any change to this register during external bus accessing is prohibited.
- This register is not available in the TYPE0 products.

7. Usage Precautions

This section explains the usage precautions for the external bus interface.

● AC Specifications

See the data sheets for the AC specifications in each operating mode.

● External Bus Pin and GPIO Setup

When you use the GPIO as an external bus pin, it is required to set the GPIO to the external bus pin setup with the EPFR register. See a separate chapter "I/O Port" for the details.

● Error Responses

When an access is made to an area within the 256MB of external bus area which has not been mapped with the area register, the external bus interface outputs an error reply (by setting HRESP[1:0] to "01"). When this error occurs during a burst transfer, the operation of the external bus interface is not guaranteed.

● Target Device and Functions Setups

The setups for each function per target device are shown in Table 7-1.

Table 7-1 Target Device and Functions Setups

	Clock output	External RDY	Page mode	NAND Flash	Clock division
SRAM	○	○	Not allowed	Not allowed	○
NOR Flash memory	○	Not allowed	○	Not allowed	○
NAND Flash memory	Not allowed	Not allowed	Not allowed	○	○

Do not make a setup using page read and external RDY at the same time.

● MCU Type and Functions Setups

The setup of each function depend the MCU type as shown in Table 7-2.

Table 7-2 Target Device and Functions Setups

	Bus type	Clock output	External RDY	Page mode	NAND Flash	Clock division
TYPE 0	Separate	Not allowed	Not allowed	○	○	Not allowed
Except TYPE0	Separate/ Multiplex	○	○	○	○	○

* The MCU type depends on the product.

● Rewrite Timing of Register Value

When the setup value of registers such as the timing register is rewritten from the CPU while accessing the external bus from the DMAC, written values will not be reflected until the access is completed (after the idle cycle).

CHAPTER 13: Debug Interface

This chapter explains the function and operation of the debug interface.

1. Overview
2. Pin Description

1. Overview

This family contains a Serial Wire JTAG Debug Port (SWJ-DP) and a Serial Wire Debug Port(SW-DP).

Connecting an ICE to the SWJ-DP allows system debugging.

This series also contains an Embedded Trace Macro Cell (ETM) for tracing instructions and a Trace Port Interface Unit (TPIU) that controls trace data.

This section describes the debugging interfaces.
For details on the SWJ-DP, SW-DP, ETM, TPIU and system debug, see "Cortex-M3 Technical Reference Manual".

■ Features

Five pins are assigned to the SWJ-DP.

Two pins are aasigned to the SW-DP.

The initial function of SWJ-DP/SW-DP is the debugging interface.

It is possible to output instruction trace by selecting it from 4-bit trace data (TRACED0 to TRACED3) and asynchronous trace data (SWO).

■ Debugging interface

Table 1-1 List of Corresspondence between Product TYPE and Debugging

Product TYPE	Debugging Interface
TYPE1 to TYPE9, TYPE11, TYPE12	SWJ-DP
TYPE10	SW-DP

2. Pin Description

This section explains pins.

2.1 Pins for Debug Purposes
2.2 ETM Pins
2.3 Functions Initially Assigned to Pins
2.4 Internal Pull-Ups of Debug Pins

2.1. Pins for Debug Purposes

Five pins (TRSTX, TCK, TMS, TDI, and TDO) are assigned to the JTAG and two pins (SWCLK and SWDIO) are assigned to the serial wire. In addition, a Serial Wire Viewer signal (SWO) that outputs trace data is assigned.
TMS is shared with SWDIO, TCK is shared with SWCLK, and TDO is shared with SWO.

The following provides a list of functions in each debug mode.

Table 2-1 JTAG/Serial Wire/Trace functions in debug mode

Pin	JTAG	Serial Wire/Trace
TCK/SWCLK	TCK (JTAG Clock signal)	SWCLK (Serial Wire Clock signal)
TMS/SWDIO	TMS (JTAG State Mode signal)	SWDIO (Serial Wire Data Input/Output signal)
TDI	TDI (JTAG Data Input signal)	-
TDO/SWO	TDO (JTAG Data Output signal)	SWO (Serial Wire Viewer Output signal)
TRSTX	TRSTX (active-LOW JTAG Reset signal)	-

2.2. ETM Pins

Four signals of trace output data (TRACED0, TRACED1, TRACED2, and TRACED3) and one clock signal (TRACECLK) are assigned for ETM.

Table 2-2 shows a list of pin functions in each debug mode.

Table 2-2 Trace pin functions in debug mode

Pin	Trace
TRACED0	Synchronous Trace Data Output signal
TRACED1	Synchronous Trace Data Output signal
TRACED2	Synchronous Trace Data Output signal
TRACED3	Synchronous Trace Data Output signal
TRACECLK	Trace Clock signal

2.3. Functions Initially Assigned to Pins

SWJ-DP/SW-DP/ETM/Trace pins are used also as GPIO.
SWJ-DP/SW-DP/Trace pins are initially dedicated to debug function, whereas ETM pins are not initially dedicated to that.
When using this series, please configure these ETM pins to provide the debug function.

Note: For details on how to set the debug function, see Chapter "I/O Port"

Table 2-3 shows initial states after resets are cleared and the functions that can be changed by setting PFRs (Port function registers).

Note: For details on the PFRs, see chapter "I/O Port".

Table 2-3 Functions initially assigned to pins for debugging purposes and change of functions

	Pin name	Initially assigned pin function	Change of functions by setting the PFRs
SWJ-DP pins	TCK/SWCLK	TCK/SWCLK	GPIO
	TMS/SWDIO	TMS/SWDIO	GPIO
	TDI	TDI	GPIO
	TDO/SWO	TDO/SWO	GPIO
	TRSTX	TRSTX	GPIO
SW-DP/ Trace pins	SWCLK	SWCLK	GPIO
	SWDIO	SWDIO	GPIO
	SWO	SWO	GPIO
ETM pins	TRACED0	GPIO	TRACED0
	TRACED1	GPIO	TRACED1
	TRACED2	GPIO	TRACED2
	TRACED3	GPIO	TRACED3
	TRACECLK	GPIO	TRACECLK

2.4. Internal Pull-Ups of Debug Pins

As specified by the IEEE Standard, this family provides the Debug pins that have internal pull-ups. The user can control pull-ups by setting the appropriate registers in the GPIO.

Table 2-4 Enabled or disabled state of internal pull-ups of debug pins

	Pin name	Pull-up with debug pins enabled *1
SWJ-DP	TCK/SWCLK	Enabled
	TMS/SWDIO	Enabled
	TDI	Enabled
	TDO/SWO	Enabled *2
	TRSTX	Enabled
SW-DP/ Trace pins	SWCLK	Enabled
	SWDIO	Enabled
	SWO	Enabled *2

*1: Pull-up is enabled on reset.
*2: Pull-up is disabled on output.

CHAPTER 14: Flash Memory

For the flash memory, refer to the “Flash Programming Manual” of the product to be used.

CHAPTER 15: Unique ID Register

Functions and operations of Unique ID Register are explained as follows.

1. Overview
2. Registers

1. Overview

Overview of this function is explained as follows.

41 bits of preset device unique values have been set to the Unique ID Register.

These values are different from each other in all of the devices which allow using these bits for various purposes such as security enhancement and product serial number.

This register is a read-only register which cannot be written by the user. Also, these values will not be changed due to reset or power on/off.

2. Registers

Configuration and functions of registers are explained as follows.

■ Registers list

Abbreviated Name	Register Name	Reference
UIDR0	Unique ID Register 0	2.1
UIDR1	Unique ID Register 1	2.2

2.1. Unique ID Register 0 (UIDR0: Unique ID Register 0)

Unique ID Register 0 is explained as follows.

bit	31	30	29	28	27	26	25	24
Field	UID[27:20]							
Attribute	R							

bit	23	22	21	20	19	18	17	16
Field	UID[19:12]							
Attribute	R							

bit	15	14	13	12	11	10	9	8
Field	UID[11:4]							
Attribute	R							

bit	7	6	5	4	3	2	1	0
Field	UID[3:0]				Reserved			
Attribute	R				-			

[bit31:4] UID[27:0] : Unique ID 27 through Unique ID 0
bit27 through bit0 of the unique ID.

[bit3:0] Reserved : Reserved bits
Reserved bits. Read values have no meaning.

2.2. Unique ID Register 1 (UIDR1: Unique ID Register 1)

Unique ID Register 1 is explained as follows.

bit	31	30	29	28	27	26	25	24
Field	Reserved							
Attribute	-							

bit	23	22	21	20	19	18	17	16
Field	Reserved							
Attribute	-							

bit	15	14	13	12	11	10	9	8
Field	Reserved			UID[40:36]				
Attribute	-			R				

bit	7	6	5	4	3	2	1	0
Field	UID[35:28]							
Attribute	R							

[bit31:13] Reserved : Reserved bits

Reserved bits. Read values have no meaning.

[bit12:0] UID[40:28] : Unique ID 40 through Unique ID 28

bit 40 through bit28 of unique ID.

Appendixes

This chapter shows the register map, list of notes, limitations, product type list and major changes.

A. Register Map
B. List of Notes
C. List of Limitations
D. Product TYPE List
E. Major Changes

A. Register Map

This chapter shows the register map.

1. Register Map

1. Register Map

Register map is shown on the table every module/function.

[How to read the each table]

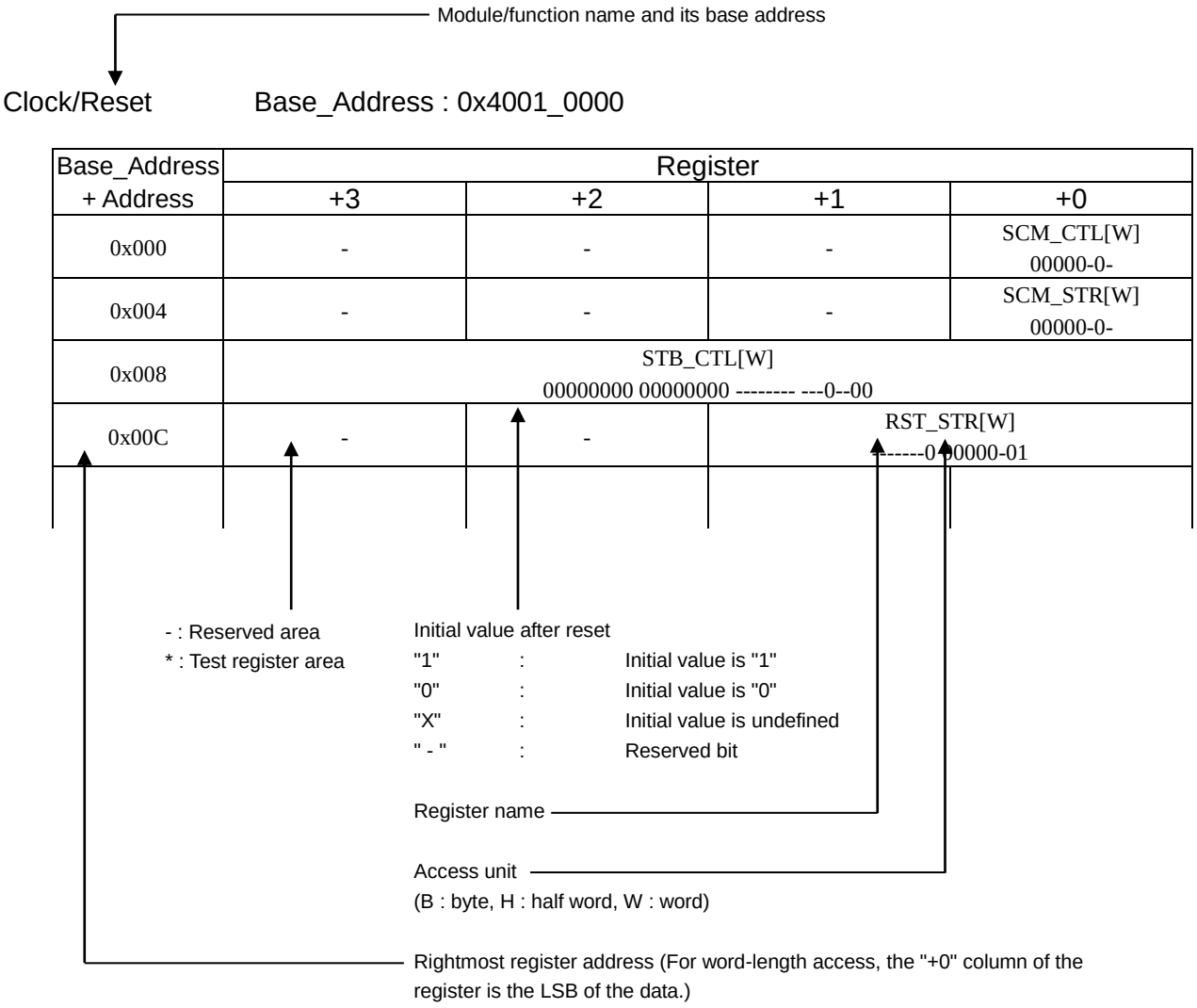

<Notes>

- The register table is represented in the little-endian.
- When performing a data access, the addresses should be as below according to the access size.
  - Word access: Address should be multiples of 4 (least significant 2 bits should be "0x00")
  - Half word access: Address should be multiples of 2 (least significant bit should be "0x0")
  - Byte access: -
- Do not access the test register area.
- Do not access the area that is not written in the register table.
- When the register is accessed by larger unit than register size, for the reserved area to access at the same time, the read value is undefined, and writing is invalid.
- The respective meanings of *1 to *8 in the register map are as follows:

- *1: Initial value for TYPE0.
- *2: Initial value for TYPE1 to TYPE7.
- *3: Initial value for TYPE0, TYPE3, and TYPE7.
- *4: Initial value for TYPE1, TYPE2, TYPE4, and TYPE5.
- *5: Initial value for TYPE6, TYPE8, and TYPE9.
- *6: Initial value for TYPE3 and TYPE7.
- *7: Initial value for TYPE6 and TYPE8.
- *8: Initial value for TYPE9 to TYPE12.

1.1. Flash I/F

Base_Address : 0x4000_0000

■ Products other than TYPE6, and TYPE8 to TYPE12

Base_Address + Address	Register			
	+3	+2	+1	+0
0x000	FASZR[B,H,W]			
0x004	FRWTR[B,H,W]			
0x008	FSTR[B,H,W]			
0x00C	*			
0x010	FSYNDN[B,H,W]			
0x014	FBFCR[B,H,W]			
0x018 - 0x0FC	-	-	-	-
0x100	CRTRMM[B,H,W]			
0x104 - 0xFFC	-	-	-	-

■ TYPE6, and TYPE8 to TYPE11 products

Base_Address + Address	Register			
	+3	+2	+1	+0
0x000	-	-	-	-
0x004	FRWTR[B,H,W]			
0x008	FSTR[B,H,W]			
0x00C - 0x01C	-	-	-	-
0x020	FICR[B,H,W]			
0x024	FISR[B,H,W]			
0x028	FICLR[B,H,W]			
0x02C - 0x0FC	-	-	-	-
0x100	CRTRMM[B,H,W]			
0x104 - 0xFFC	-	-	-	-

■ **TYPE12 products**

Base_Address + Address	Register			
	+3	+2	+1	+0
0x000	-	-	-	-
0x004	FRWTR[B,H,W]			
0x008	FSTR[B,H,W]			
0x00C - 0x01C	-	-	-	-
0x020	FICR[B,H,W]			
0x024	FISR[B,H,W]			
0x028	FICLR[B,H,W]			
0x02C - 0x084	-	-	-	-
0x088	FSTR1[B,H,W]			
0x08C - 0x0FC	-	-	-	-
0x100	CRTRMM[B,H,W]			
0x104 - 0xFFC	-	-	-	-

Note:

For details of Flash I/F registers, see "FLASH PROGRAMMING MANUAL" of the product used.

1.2. Unique ID

Base_Address : 0x4000_0200

Base_Address + Address	Register			
	+3	+2	+1	+0
0x000	UIDR0 [W] XXXXXXXX XXXXXXXX XXXXXXXX XXXX----			
0x004	UIDR1 [W] -------- -------- ---XXXXX XXXXXXXX			
0x008 - 0xDFC	-	-	-	-

1.3. Clock/Reset

Base_Address : 0x4001_0000

Base_Address + Address	Register			
	+3	+2	+1	+0
0x000	-	-	-	SCM_CTL[W] 00000-0-
0x004	-	-	-	SCM_STR[W] 00000-0-
0x008	STB_CTL[W] 00000000 00000000 -------- ---0-000			
0x00C	-	-	RST_STR[W] -------0 00000-01	
0x010	-	-	-	BSC_PSR[W] -----000
0x014	-	-	-	APBC0_PSR[W] ------00
0x018	-	-	-	APBC1_PSR[W] 1--0--00
0x01C	-	-	-	APBC2_PSR[W] 1--0--00
0x020	-	-	-	SWC_PSR[W] X-----00
0x024 - 0x027	-	-	-	-
0x028	-	-	-	TTC_PSR[W] ------00
0x02C - 0x02F	-	-	-	-
0x030	-	-	-	CSW_TMR[W] -0000000
0x034	-	-	-	PSW_TMR[W] ---0-000
0x038	-	-	-	PLL_CTL1[W] 00000000
0x03C	-	-	-	PLL_CTL2[W] ---00000
0x040	-	-	CSV_CTL[W] -111--00 ------11	

Base_Address + Address	Register			
	+3	+2	+1	+0
0x044	-	-	-	CSV_STR[W] ------00
0x048	-	-	FCSWH_CTL[W] 11111111 11111111	
0x04C	-	-	FCSWL_CTL[W] 00000000 00000000	
0x050	-	-	FCSWD_CTL[W] 00000000 00000000	
0x054	-	-	-	DBWDT_CTL[W] 0-0-----
0x058	-	-	-	*
0x05C - 0x05F	-	-	-	-
0x060	-	-	-	INT_ENR[W] --0--000
0x064	-	-	-	INT_STR[W] --0--000
0x068	-	-	-	INT_CLR[W] --0--000
0x06C - 0xFFC	-	-	-	-

1.4. HW WDT

Base_Address : 0x4001_1000

Base_Address + Address	Register			
	+3	+2	+1	+0
0x000	WDG_LDR[W] 00000000 00000000 11111111 11111111			
0x004	WDG_VLR[W] XXXXXXXX XXXXXXXX XXXXXXXX XXXXXXXX			
0x008	WDG_CTL[W]			
	-	-	-	------11
0x00C	WDG_ICL[W]			
	-	-	-	XXXXXXXX
0x010	WDG_RIS[W]			
	-	-	-	-------0
0x014 - 0xBFC	-	-	-	-
0xC00	WDG_LCK[W] 00000000 00000000 00000000 00000001			
0xC04 - 0xFFC	-	-	-	-

1.5. SW WDT

Base_Address : 0x4001_2000

Base_Address + Address	Register			
	+3	+2	+1	+0
0x000	WdogLoad[W] 11111111 11111111 11111111 11111111			
0x004	WdogValue[W] 11111111 11111111 11111111 11111111			
0x008	WdogControl[W]			
	-	-	-	------00
0x00C	WdogIntClr[W] XXXXXXXX XXXXXXXX XXXXXXXX XXXXXXXX			
0x010	WdogRIS[W]			
	-	-	-	-------0
0x014 - 0xBFC	-	-	-	-
0xC00	WdogLock[W] 00000000 00000000 00000000 00000000			
0xC04 - 0xFFC	-	-	-	-

1.6. Dual_Timer

Base_Address : 0x4001_5000

Base_Address + Address	Register			
	+3	+2	+1	+0
0x000	Timer1Load[W] 00000000 00000000 00000000 00000000			
0x004	Timer1Value[W] 11111111 11111111 11111111 11111111			
0x008	Timer1Control[W] -------- -------- -------- 00100000			
0x00C	Timer1IntClr[W] XXXXXXXX XXXXXXXX XXXXXXXX XXXXXXXX			
0x010	Timer1RIS[W] -------- -------- -------- -------0			
0x014	Timer1MIS[W] -------- -------- -------- -------0			
0x018	Timer1BGLoad[W] 00000000 00000000 00000000 00000000			
0x020	Timer2Load[W] 00000000 00000000 00000000 00000000			
0x024	Timer2Value[W] 11111111 11111111 11111111 11111111			
0x028	Timer2Control[W] -------- -------- -------- 00100000			
0x02C	Timer2IntClr[W] XXXXXXXX XXXXXXXX XXXXXXXX XXXXXXXX			
0x030	Timer2RIS[W] -------- -------- -------- -------0			
0x034	Timer2MIS[W] -------- -------- -------- -------0			
0x038	Timer2BGLoad[W] 00000000 00000000 00000000 00000000			
0x040 - 0xFFC	-	-	-	-

1.7. MFT

unit0 Base_Address : 0x4002_0000
unit1 Base_Address : 0x4002_1000
unit2 Base_Address : 0x4002_2000

Base_Address + Address	Register			
	+3	+2	+1	+0
0x000	-	-	OCCP0[H,W] 00000000 00000000	
0x004	-	-	OCCP1[H,W] 00000000 00000000	
0x008	-	-	OCCP2[H,W] 00000000 00000000	
0x00C	-	-	OCCP3[H,W] 00000000 00000000	
0x010	-	-	OCCP4[H,W] 00000000 00000000	
0x014	-	-	OCCP5[H,W] 00000000 00000000	
0x018	-	-	OCSB10[B,H,W] -110--00	OCSA10[B,H,W] 00001100
0x01C	-	-	OCSB32[B,H,W] -110--00	OCSA32[B,H,W] 00001100
0x020	-	-	OCSB54[B,H,W] -110--00	OCSA54[B,H,W] 00001100
0x024	-	-	OCSC[B,H,W] --000000	-
0x028	-	-	TCCP0[H,W] 11111111 11111111	
0x02C	-	-	TCDT0[H,W] 00000000 00000000	
0x030	-	-	TCSA0[B,H,W] 000---00 01000000	
0x034	-	-	TCSB0[B,H,W] -------- -----000	
0x038	-	-	TCCP1[H,W] 11111111 11111111	
0x03C	-	-	TCDT1[H,W] 00000000 00000000	

Base_Address + Address	Register			
	+3	+2	+1	+0
0x040	-	-	TCSA1[B,H,W] 000---00 01000000	
0x044	-	-	TCSB1[B,H,W] -------- -----000	
0x048	-	-	TCCP2[H,W] 11111111 11111111	
0x04C	-	-	TCDT2[H,W] 00000000 00000000	
0x050	-	-	TCSA2[B,H,W] 000---00 01000000	
0x054	-	-	TCSB2[B,H,W] -------- -----000	
0x058	-	-	OCFS32[B,H,W] 00000000	OCFS10[B,H,W] 00000000
0x05C	-	-	-	OCFS54[B,H,W] 00000000
0x060	-	-	ICFS32[B,H,W] 00000000	ICFS10[B,H,W] 00000000
0x064	-	-	-	-
0x068	-	-	ICCP0[H,W] XXXXXXXX XXXXXXXX	
0x06C	-	-	ICCP1[H,W] XXXXXXXX XXXXXXXX	
0x070	-	-	ICCP2[H,W] XXXXXXXX XXXXXXXX	
0x074	-	-	ICCP3[H,W] XXXXXXXX XXXXXXXX	
0x078	-	-	ICSB10[B,H,W] ------00	ICSA10[B,H,W] 00000000
0x07C	-	-	ICSB32[B,H,W] ------00	ICSA32[B,H,W] 00000000
0x080	-	-	WFTM10[H,W] 00000000 00000000	
0x084	-	-	WFTM32[H,W] 00000000 00000000	

Base_Address + Address	Register			
	+3	+2	+1	+0
0x088	-	-	WFTM54[H,W] 00000000 00000000	
0x08C	-	-	WFSA10[H,W]	
			---00000 000000	
0x090	-	-	WFSA32[H,W] ---00000 000000	
0x094	-	-	WFSA54[H,W] ---00000 000000	
0x098	-	-	WFIR[H,W] 00000000 0000--00	
0x09C	-	-	NZCL[H,W] -------- ---00000	
0x0A0	-	-	ACCP0[H,W] 00000000 00000000	
0x0A4	-	-	ACCPDN0[H,W] 00000000 00000000	
0x0A8	-	-	ACCP1[H,W] 00000000 00000000	
0x0AC	-	-	ACCPDN1[H,W] 00000000 00000000	
0x0B0	-	-	ACCP2[H,W] 00000000 00000000	
0x0B4	-	-	ACCPDN2[H,W] 00000000 00000000	
0x0B8	-	-	-	ACSB[B,H,W] -000-111
0x0BC	-	-	ACSA[B,H,W] --000000 --000000	
0x0C0	-	-	ATSA[H,W] --000000 --000000	
0x0C4 - 0x0FC	-	-	-	-

1.8. PPG

Base_Address : 0x4002_4000

Base_Address + Address	Register			
	+3	+2	+1	+0
0x000	-	-	TTCR0 [B,H,W] 11110000	-
0x004	-	-	-	*
0x008	-	-	COMP0 [B,H,W] 00000000	-
0x00C	-	-	-	COMP2 [B,H,W] 00000000
0x010	-	-	COMP4 [B,H,W] 00000000	-
0x014	-	-	-	COMP6 [B,H,W] 00000000
0x018 - 0x01C	-	-	-	-
0x020	-	-	TTCR1 [B,H,W] 11110000	-
0x024	-	-	-	*
0x028	-	-	COMP1 [B,H,W] 00000000	-
0x02C	-	-	-	COMP3 [B,H,W] 00000000
0x030	-	-	COMP5 [B,H,W] 00000000	-
0x034	-	-	-	COMP7 [B,H,W] 00000000
0x038 - 0x03C	-	-	-	-
0x040	-	-	TTCR2 [B,H,W] 11110000	-
0x044	-	-	-	*
0x048	-	-	COMP8 [B,H,W] 00000000	-
0x04C	-	-	-	COMP10 [B,H,W] 00000000

Base_Address + Address	Register			
	+3	+2	+1	+0
0x050	-	-	COMP12 [B,H,W] 00000000	-
0x054	-	-	-	COMP14 [B,H,W] 00000000
0x58 - 0x0FC	-	-	-	-
0x100	-	-	TRG0 [B,H,W] 00000000 00000000	
0x104	-	-	REVC0 [B,H,W] 00000000 00000000	
0x108 - 0x13C	-	-	-	-
0x140	-	-	TRG1 [B,H,W] -------- 00000000	
0x144	-	-	REVC1 [B,H,W] -------- 00000000	
0x148 - 0x1FC	-	-	-	-
0x200	-	-	PPGC0 [B,H,W] 00000000	PPGC1 [B,H,W] 00000000
0x204	-	-	PPGC2 [B,H,W] 00000000	PPGC3 [B,H,W] 00000000
0x208	-	-	PRLH0 [B,H,W] XXXXXXXX	PRLL0 [B,H,W] XXXXXXXX
0x20C	-	-	PRLH1 [B,H,W] XXXXXXXX	PRLL1 [B,H,W] XXXXXXXX
0x210	-	-	PRLH2 [B,H,W] XXXXXXXX	PRLL2 [B,H,W] XXXXXXXX
0x214	-	-	PRLH3 [B,H,W] XXXXXXXX	PRLL3 [B,H,W] XXXXXXXX
0x218	-	-	-	GATEC0 [B,H,W] --00---00
0x21C - 0x23C	-	-	-	-
0x240	-	-	PPGC4 [B,H,W] 00000000	PPGC5 [B,H,W] 00000000

Base_Address + Address	Register			
	+3	+2	+1	+0
0x244	-	-	PPGC6 [B,H,W] 00000000	PPGC7 [B,H,W] 00000000
0x248	-	-	PRLH4 [B,H,W] XXXXXXXX	PRLL4 [B.H.W] XXXXXXXX
0x24C	-	-	PRLH5 [B,H,W] XXXXXXXX	PRLL5 [B,H,W] XXXXXXXX
0x250	-	-	PRLH6 [B,H,W]	PRLL6 [B,H,W]
			XXXXXXXX	XXXXXXXX
0x254	-	-	PRLH7 [B,H,W] XXXXXXXX	PRLL7 [B,H,W] XXXXXXXX
0x258	-	-	-	GATEC4 [B,H,W] --00--00
0x25C - 0x27C	-	-	-	-
0x280	-	-	PPGC8 [B,H,W] 00000000	PPGC9 [B,H,W] 00000000
0x284	-	-	PPGC10 [B,H,W] 00000000	PPGC11 [B,H,W] 00000000
0x288	-	-	PRLH8 [B,H,W] XXXXXXXX	PRLL8 [B,H,W] XXXXXXXX
0x28C	-	-	PRLH9 [B,H,W] XXXXXXXX	PRLL9 [B,H,W] XXXXXXXX
0x290	-	-	PRLH10 [B,H,W] XXXXXXXX	PRLL10 [B,H,W] XXXXXXXX
0x294	-	-	PRLH11 [B,H,W] XXXXXXXX	PRLL11 [B,H,W] XXXXXXXX
0x298	-	-	-	GATEC8 [B,H,W] --00--00
0x29C - 0x2BC	-	-	-	-
0x2C0	-	-	PPGC12 [B,H,W] 00000000	PPGC13 [B,H,W] 00000000
0x2C4	-	-	PPGC14 [B,H,W] 00000000	PPGC15 [B,H,W] 00000000

Base_Address + Address	Register			
	+3	+2	+1	+0
0x2C8	-	-	PRLH12 [B,H,W] XXXXXXXX	PRLL12 [B,H,W] XXXXXXXX
0x2CC	-	-	PRLH13 [B,H,W] XXXXXXXX	PRLL13 [B,H,W] XXXXXXXX
0x2D0	-	-	PRLH14 [B,H,W] XXXXXXXX	PRLL14 [B,H,W] XXXXXXXX
0x2D4	-	-	PRLH15 [B,H,W] XXXXXXXX	PRLL15 [B,H,W] XXXXXXXX
0x2D8	-	-	-	GATEC12 [B,H,W] --00--00
0x2DC - 0x2FC	-	-	-	-
0x300	-	-	PPGC16 [B,H,W] 00000000	PPGC17 [B,H,W] 00000000
0x304	-	-	PPGC18 [B,H,W] 00000000	PPGC19 [B,H,W] 00000000
0x308	-	-	PRLH16 [B,H,W] XXXXXXXX	PRLL16 [B,H,W] XXXXXXXX
0x30C	-	-	PRLH17 [B,H,W] XXXXXXXX	PRLL17 [B,H,W] XXXXXXXX
0x310	-	-	PRLH18 [B,H,W] XXXXXXXX	PRLL18 [B,H,W] XXXXXXXX
0x314	-	-	PRLH19 [B,H,W] XXXXXXXX	PRLL19 [B,H,W] XXXXXXXX
0x318	-	-	-	GATEC16[B,H,W] --00--00
0x31C - 0x33C	-	-	-	-
0x340	-	-	PPGC20 [B,H,W] 00000000	PPGC21 [B,H,W] 00000000
0x344	-	-	PPGC22 [B,H,W] 00000000	PPGC23 [B,H,W] 00000000
0x348	-	-	PRLH20 [B,H,W] XXXXXXXX	PRLL20 [B,H,W] XXXXXXXX

Base_Address + Address	Register			
	+3	+2	+1	+0
0x34C	-	-	PRLH21 [B,H,W] XXXXXXXX	PRLL21 [B,H,W] XXXXXXXX
0x350	-	-	PRLH22 [B,H,W] XXXXXXXX	PRLL22 [B,H,W] XXXXXXXX
0x354	-	-	PRLH23 [B,H,W] XXXXXXXX	PRLL23 [B,H,W] XXXXXXXX
0x358	-	-	-	GATEC20 [B,H,W] --00--00
0x35C - 0x37C	-	-	-	-
0x380	-	-	-	IGBTC [B,H,W] 00000000
0x384 - 0xFFC	-	-	-	-

1.9. Base Timer

ch.0 Base Address : 0x4002_5000
ch.1 Base Address : 0x4002_5040
ch.2 Base Address : 0x4002_5080
ch.3 Base Address : 0x4002_50C0
ch.4 Base Address : 0x4002_5200
ch.5 Base Address : 0x4002_5240
ch.6 Base Address : 0x4002_5280
ch.7 Base Address : 0x4002_52C0
ch.8 Base Address : 0x4002_5400
ch.9 Base Address : 0x4002_5440
ch.10 Base Address : 0x4002_5480
ch.11 Base Address : 0x4002_54C0
ch.12 Base Address : 0x4002_5600
ch.13 Base Address : 0x4002_5640
ch.14 Base Address : 0x4002_5680
ch.15 Base Address : 0x4002_56C0

Base_Address + Address	Register			
	+3	+2	+1	+0
0x000	-	-	PCSR/PRLL [H,W] XXXXXXXX XXXXXXXX	
0x004	-	-	PDUT/PRLH/DTBF [H,W] XXXXXXXX XXXXXXXX	
0x008	-	-	TMR [H,W] 00000000 00000000	
0x00C	-	-	TMCR [B,H,W] -0000000 00000000	
0x010	-	-	TMCR2 [B,H,W] -------0	STC [B,H,W] 0000-000
0x014 - 0x03C	-	-	-	-

1.10. IO Selector for ch.0-ch.3 (Base Timer)

Base Address : 0x4002_5100

Base_Address + Address	Register			
	+3	+2	+1	+0
0x000	-	-	BTSEL0123 [B,H,W] 00000000	-
0x004 - 0x0FC	-	-	-	-

1.11. IO Selector for ch.4-ch.7(Base Timer)

Base Address : 0x4002_5300

Base_Address + Address	Register			
	+3	+2	+1	+0
0x000	-	-	BTSEL4567 [B,H,W] 00000000	-
0x004 - 0x0FC	-	-	-	-

1.12. IO Selector for ch.8-ch.11(Base Timer)

Base Address : 0x4002_5500

Base_Address + Address	Register			
	+3	+2	+1	+0
0x000	-	-	BTSEL89AB [B,H,W] 00000000	-
0x004 - 0x0FC	-	-	-	-

1.13. IO Selector for ch.12-ch.15 (Base Timer)

Base Address : 0x4002_5700

Base_Address + Address	Register			
	+3	+2	+1	+0
0x000	-	-	BTSELCDEF [B,H,W] 00000000	-
0x004 - 0x0FC	-	-	-	-

1.14. Software-based Simultaneous Startup (Base Timer)

Base Address : 0x4002_5F00

Base_Address + Address	Register			
	+3	+2	+1	+0
0x000 - 0x0FB	-	-	-	-
0x0FC	-	-	BTSSSR [B,H,W] XXXXXXXX XXXXXXXX	

1.15. QPRC

ch.0 Base Address : 0x4002_6000
ch.1 Base Address : 0x4002_6040
ch.2 Base Address : 0x4002_6080

Base_Address + Address	Register			
	+3	+2	+1	+0
0x000	-	-	QPCR [H,W] 00000000 00000000	
0x004	-	-	QRCR [H,W] 00000000 00000000	
0x008	-	-	QPCCR [H,W] 00000000 00000000	
0x00C	-	-	QPRCR [H,W] 00000000 00000000	
0x010	-	-	QMPR [H,W] 11111111 11111111	
0x014	-	-	QICRH [B,H,W] --000000	QICRL [B,H,W] 00000000
0x018	-	-	QCRH [B,H,W] 00000000	QCRL [B,H,W] 00000000
0x01C	-	-	QECR [B,H,W] -------- -----000	
0x020 - 0x038	-	-	-	-
0x03C	QPCRR [B,H,W] 00000000 00000000		QRCRR [B,H,W] 00000000 00000000	

1.16. 12-bit A/DC

unit0 Base_Address : 0x4002_7000
unit1 Base_Address : 0x4002_7100
unit2 Base_Address : 0x4002_7200

■ TYPE0 to TYPE2, TYPE4, and TYPE5 products

Base_Address + Address	Register			
	+3	+2	+1	+0
0x000	-	-	ADCR[B,H,W] 000-0000	ADSR[B,H,W] 00---000
0x004	-	-	-	*
0x008	-	-	SCCR[B,H,W] 1000-000	SFNS[B,H,W] ----0000
0x00C	SCFD[B,H,W] XXXXXXXX XXXX---- ---1--XX ---XXXXX			
0x010	-	-	SCIS3[B,H,W] 00000000	SCIS2[B,H,W] 00000000
0x014	-	-	SCIS1[B,H,W] 00000000	SCIS0[B,H,W] 00000000
0x018	-	-	PCCR[B,H,W] 10000000	PFNS[B,H,W] --XX--00
0x01C	PCFD[B,H,W] XXXXXXXX XXXX---- ---1-XXX ---XXXXX			
0x020	-	-	-	PCIS[B,H,W] 00000000
0x024	CMPD[B,H,W] 00000000 00------		-	CMPCR[B,H,W] 00000000
0x028	-	-	ADSS3[B,H,W] 00000000	ADSS2[B,H,W] 00000000
0x02C	-	-	ADSS1[B,H,W] 00000000	ADSS0[B,H,W] 00000000
0x030	-	-	ADST0[B,H,W] 00010000	ADST1[B,H,W] 00010000
0x034	-	-	-	ADCT[B,H,W] 00000111
0x038	-	-	SCTSL[B,H,W] ----0000	PRTSL[B,H,W] ----0000
0x03C	-	-	-	ADCEN[B,H,W] --00--00
0x040 - 0x0FC	-	-	-	-

■ TYPE3, and TYPE6 to TYPE12 products

Base_Address + Address	Register			
	+3	+2	+1	+0
0x000	-	-	ADCR[B,H,W] 000-0000	ADSR[B,H,W] 00---000
0x004	-	-	-	*
0x008	-	-	SCCR[B,H,W] 1000-000	SFNS[B,H,W] ----0000
0x00C	SCFD[B,H,W] XXXXXXXX XXXX---- ---1--XX ---XXXXX			
0x010	-	-	SCIS3[B,H,W] 00000000	SCIS2[B,H,W] 00000000
0x014	-	-	SCIS1[B,H,W] 00000000	SCIS0[B,H,W] 00000000
0x018	-	-	PCCR[B,H,W] 10000000	PFNS[B,H,W] --XX--00
0x01C	PCFD[B,H,W] XXXXXXXX XXXX---- ---1-XXX ---XXXXX			
0x020	-	-	-	PCIS[B,H,W] 00000000
0x024	CMPD[B,H,W] 00000000 00------		-	CMPCR[B,H,W] 00000000
0x028	-	-	ADSS3[B,H,W] 00000000	ADSS2[B,H,W] 00000000
0x02C	-	-	ADSS1[B,H,W] 00000000	ADSS0[B,H,W] 00000000
0x030	-	-	ADST0[B,H,W] 00010000	ADST1[B,H,W] 00010000
0x034	-	-	-	ADCT[B,H,W] 00000111
0x038	-	-	SCTSL[B,H,W] ----0000	PRTSL[B,H,W] ----0000
0x03C	-	-	ADCEN[B,H,W] 11111111 ------00	
0x040 - 0x0FC	-	-	-	-

1.17. 10-bit D/AC

Base_Address : 0x4002_8000

Base_Address + Address	Register			
	+3	+2	+1	+0
0x000	-	DACR0[B,H,W] -------0	DADR0[B,H,W] ------XX XXXXXXXX	
0x004	-	DACR1[B,H,W] -------0	DADR1[B,H,W] ------XX XXXXXXXX	
0x008 - 0x0FC	-	-	-	-

1.18. CR Trim

Base_Address : 0x4002_E000

Base_Address + Address	Register			
	+3	+2	+1	+0
0x000	-	-	-	MCR_PSR [B,H,W] ------01
0x004	-	-	MCR_FTRM[B,H,W] ------01 10000000 *1 ------01 10001110 *6 -------- 01111111 *4 ------10 00000000 *5	
0x008	-	-	-	MCR_TTRM [B,H,W] --011111
0x00C	MCR_RLR[W] 00000000 00000000 00000000 00000001			
0x010 - 0x0FC	-	-	-	-

1.19. EXTI

Base_Address : 0x4003_0000

Base_Address + Address	Register			
	+3	+2	+1	+0
0x000	ENIR[B,H,W] 00000000 00000000 00000000 00000000			
0x004	EIRR[B,H,W] XXXXXXXX XXXXXXXX XXXXXXXX XXXXXXXX			
0x008	EICL[B,H,W] 11111111 11111111 11111111 11111111			
0x00C	ELVR[B,H,W] 00000000 00000000 00000000 00000000			
0x010	ELVR1[B,H,W] 00000000 00000000 00000000 00000000			
0x014	-	-	NMIRR[B,H,W] -------- -------0	
0x018	-	-	NMICL[B,H,W] -------- -------1	
0x01C	-	-	-	-
0x020 - 0x0FC	-	-	-	-

1.20. INT-Req. READ

Base_Address : 0x4003_1000

■ Products other than TYPE3/TYPE7

Base_Address + Address	Register			
	+3	+2	+1	+0
0x000	DRQSEL[B,H,W] 00000000 00000000 00000000 00000000			
0x004	*			
0x008	ODDPKS[B] ---00000	-	-	*
0x00C	-	-	-	IRQCMODE[B,H,W] -------0
0x010	EXC02MON[B,H,W] -------- -------- -------- ------00			
0x014	IRQ00MON[B,H,W] -------- -------- -------- -------0			
0x018	IRQ01MON[B,H,W] -------- -------- -------- -------0			
0x01C	IRQ02MON[B,H,W] -------- -------- -------- -------0			
0x020	IRQ03MON[B,H,W] -------- -------- ----0000 00000000			
0x024	IRQ04MON[B,H,W] -------- -------- -------- 00000000			
0x028	IRQ05MON[B,H,W] -------- 00000000 00000000 00000000			
0x02C	IRQ06MON[B,H,W] -------- ----0000 00000000 00000000			
0x030	IRQ07MON[B,H,W] -------- -------- -------- ------00			
0x034	IRQ08MON[B,H,W] -------- -------- -------- ----0000			
0x038	IRQ09MON[B,H,W] -------- -------- -------- ------00			
0x03C	IRQ10MON[B,H,W] -------- -------- -------- ----0000			

Base_Address	Register			
+ Address	+3	+2	+1	+0
0x040	IRQ11MON[B,H,W] -------- -------- -------- ------00			
0x044	IRQ12MON[B,H,W] -------- -------- -------- ----0000			
0x048	IRQ13MON[B,H,W] -------- -------- -------- ------00			
0x04C	IRQ14MON[B,H,W] -------- -------- -------- ----0000			
0x050	IRQ15MON[B,H,W] -------- -------- -------- ------00			
0x054	IRQ16MON[B,H,W] -------- -------- -------- ----0000			
0x058	IRQ17MON[B,H,W] -------- -------- -------- ------00			
0x05C	IRQ18MON[B,H,W] -------- -------- -------- ----0000			
0x060	IRQ19MON[B,H,W] -------- -------- -------- ------00			
0x064	IRQ20MON[B,H,W] -------- -------- -------- ----0000			
0x068	IRQ21MON[B,H,W] -------- -------- -------- ------00			
0x06C	IRQ22MON[B,H,W] -------- -------- -------- ----0000			
0x070	IRQ23MON[B,H,W] -------- -------- -------0 00000000			
0x074	IRQ24MON[B,H,W] -------- -------- -------- --000000			
0x078	IRQ25MON[B,H,W] -------- -------- -------- ----0000			
0x07C	IRQ26MON[B,H,W] -------- -------- -------- ----0000			

Base_Address + Address	Register			
	+3	+2	+1	+0
0x080	IRQ27MON[B,H,W] -------- -------- -------- ---00000			
0x084	IRQ28MON[B,H,W] -------- ------00 00000000 00000000			
0x088	IRQ29MON[B,H,W]			
	-------- -------- ----0000 00000000			
0x08C	IRQ30MON[B,H,W] -------- ------00 00000000 00000000			
0x090	IRQ31MON[B,H,W] -------- -------- 00000000 00000000			
0x094	IRQ32MON[B,H,W] -------- -------- -------- ----0000			
0x098	IRQ33MON[B,H,W] -------- -------- -------- -----000			
0x09C	IRQ34MON[B,H,W] -------- -------- -------- ---00000			
0x0A0	IRQ35MON[B,H,W] -------- -------- -------- --000000			
0x0A4	IRQ36MON[B,H,W] -------- -------- -------- --000000			
0x0A8	IRQ37MON[B,H,W] -------- -------- -------- -0000000			
0x0AC	IRQ38MON[B,H,W] -------- -------- -------- -------0			
0x0B0	IRQ39MON[B,H,W] -------- -------- -------- -------0			
0x0B4	IRQ40MON[B,H,W] -------- -------- -------- -------0			
0x0B8	IRQ41MON[B,H,W] -------- -------- -------- -------0			
0x0BC	IRQ42MON[B,H,W] -------- -------- -------- -------0			

0x0C0	IRQ43MON[B,H,W]

Base_Address + Address	Register			
	+3	+2	+1	+0
	-------- -------- -------- -------0			
0x0C4	IRQ44MON[B,H,W] -------- -------- -------- -------0			
0x0C8	IRQ45MON[B,H,W] -------- -------- -------- -------0			
0x0CC	IRQ46MON[B,H,W]			
	-------- -------- 00000000 00000000			
0x0D0	IRQ47MON[B,H,W] -------- -------- ----0--- --------			
0x0D4 - 0x1FC	-	-	-	-
0x200	DRQSEL1[B,H,W] -------- -------- -------- ---00000			
0x204	DQESEL[B,H,W] 00000000 00000000 00000000 00000000			
0x208	*			
0x20C	ODDPKS[B] ---00000	-	-	*
0x210	RCINTSEL3[B,H,W] ---00000	RCINTSEL2[B,H,W] ---00000	RCINTSEL1[B,H,W] ---00000	RCINTSEL0[B,H,W] ---00000
0x214	RCINTSEL7[B,H,W] ---00000	RCINTSEL6[B,H,W] ---00000	RCINTSEL5[B,H,W] ---00000	RCINTSEL4[B,H,W] ---00000
0x218 - 0xFFC	-	-	-	-

■ TYPE3/TYPE7 products

Base_Address + Address	Register +3	+2	+1	+0
0x000	*			
0x004	*			
0x008	*			
0x00C	-	-	-	-
0x010	EXC02MON[B,H,W] -------- -------- -------- ------00			
0x014	IRQ00MON[B,H,W] -------- -------- -------- -------0			
0x018	IRQ01MON[B,H,W] -------- -------- -------- -------0			
0x01C	IRQ02MON[B,H,W] -------- -------- -------- -------0			
0x020	IRQ03MON[B,H,W] -------- -------- -------- ----0000			
0x024	IRQ04MON[B,H,W]			
	-------- -------- -------- -0000000			
0x028	IRQ05MON[B,H,W] -------- -------- -------- 0-------			
0x02C	IRQ06MON[B,H,W] -------- -------- -------- -------0			
0x030	IRQ07MON[B,H,W] -------- -------- -------- ------00			
0x034	IRQ08MON[B,H,W] -------- -------- -------- -------0			
0x038	IRQ09MON[B,H,W] -------- -------- -------- ------00			
0x03C	IRQ10MON[B,H,W] -------- -------- -------- -------0			
0x040	IRQ11MON[B,H,W] -------- -------- -------- ------00			
0x044	IRQ12MON[B,H,W] -------- -------- -------- -------0			

Base_Address + Address	Register			
	+3	+2	+1	+0
0x048	IRQ13MON[B,H,W]			
	-------- -------- -------- ------00			
0x04C	IRQ14MON[B,H,W]			
	-------- -------- -------- -------0			
0x050	IRQ15MON[B,H,W]			
	-------- -------- -------- ------00			
0x054	IRQ16MON[B,H,W]			
	-------- -------- -------- -------0			
0x058	IRQ17MON[B,H,W]			
	-------- -------- -------- ------00			
0x05C	IRQ18MON[B,H,W]			
	-------- -------- -------- -------0			
0x060	IRQ19MON[B,H,W]			
	-------- -------- -------- ------00			
0x064	IRQ20MON[B,H,W]			
	-------- -------- -------- ------0			
0x068	IRQ21MON[B,H,W]			
	-------- -------- -------- ------00			
0x06C	IRQ22MON[B,H,W]			
	-------- -------- -------- -----000			
0x070	IRQ23MON[B,H,W]			
	-------- -------- -------- --0--000			
0x074	IRQ24MON[B,H,W]			
	-------- -------- -------- ----0000			
0x078	IRQ25MON[B,H,W]			
	-------- -------- -------- --000000			
0x07C	IRQ26MON[B,H,W]			
	-------- -------- -------- ----0000			
0x080	IRQ27MON[B,H,W]			
	-------- -------- -------- --000000			
0x084	IRQ28MON[B,H,W]			
	-------- -------- 00000000 00000000			

Base_Address + Address	Register			
	+3	+2	+1	+0
0x088	IRQ29MON[B,H,W] -------- -------- -------- ---0----			
0x08C	IRQ30MON[B,H,W] -------- -------- -------- --0-----			
0x090	IRQ31MON[B,H,W] -------- -------- -------- -0------			

1.21. LCDC

Base_Address : 0x4003_2000

Base_Address + Address	Register			
	+3	+2	+1	+0
0x000	-	LCDCC3[B,H,W] 0011111-	LCDCC2[B,H,W] --010100	LCDCC1[B,H,W] -00000--
0x004	LCDC_PSR[B,H,W] -------- -0000000 00000000 00000000			
0x008	LCDC_COMEN[B,H,W] -------- -------- -------- 00000000			
0x00C	LCDC_SEGEN1[B,H,W] 00000000 00000000 00000000 00000000			
0x010	LCDC_SEGEN2[B,H,W] -------- -------- -------- 00000000			
0x014	-	-	LCDC_BLINK[B,H,W] 00000000 00000000	
0x018	-	-	-	-
0x01C	LCDRAM03[B,H,W] 00000000	LCDRAM02[B,H,W] 00000000	LCDRAM01[B,H,W] 00000000	LCDRAM00[B,H,W] 00000000
0x020	LCDRAM07[B,H,W] 00000000	LCDRAM06[B,H,W] 00000000	LCDRAM05[B,H,W] 00000000	LCDRAM04[B,H,W] 00000000
0x024	LCDRAM11[B,H,W] 00000000	LCDRAM10[B,H,W] 00000000	LCDRAM09[B,H,W] 00000000	LCDRAM08[B,H,W] 00000000
0x028	LCDRAM15[B,H,W] 00000000	LCDRAM14[B,H,W] 00000000	LCDRAM13[B,H,W] 00000000	LCDRAM12[B,H,W] 00000000
0x02C	LCDRAM19[B,H,W] 00000000	LCDRAM18[B,H,W] 00000000	LCDRAM17[B,H,W] 00000000	LCDRAM16[B,H,W] 00000000
0x030	LCDRAM23[B,H,W] 00000000	LCDRAM22[B,H,W] 00000000	LCDRAM21[B,H,W] 00000000	LCDRAM20[B,H,W] 00000000
0x034	LCDRAM27[B,H,W] 00000000	LCDRAM26[B,H,W] 00000000	LCDRAM25[B,H,W] 00000000	LCDRAM24[B,H,W] 00000000
0x038	LCDRAM31[B,H,W] 00000000	LCDRAM30[B,H,W] 00000000	LCDRAM29[B,H,W] 00000000	LCDRAM28[B,H,W] 00000000
0x03C	LCDRAM35[B,H,W] 00000000	LCDRAM34[B,H,W] 00000000	LCDRAM33[B,H,W] 00000000	LCDRAM32[B,H,W] 00000000
0x040	LCDRAM39[B,H,W] 00000000	LCDRAM38[B,H,W] 00000000	LCDRAM37[B,H,W] 00000000	LCDRAM36[B,H,W] 00000000
0x044 - 0x0FC	-	-	-	-

1.22. GPIO

Base_Address : 0x4003_3000

Base_Address + Address	Register			
	+3	+2	+1	+0
0x000	PFR0[B,H,W] ---- ---- ---- ---- 0000 0000 0001 1111			
0x004	PFR1[B,H,W] ---- ---- ---- ---- 0000 0000 0000 0000			
0x008	PFR2[B,H,W] ---- ---- ---- ---- 0000 0000 0000 0000			
0x00C	PFR3[B,H,W] ---- ---- ---- ---- 0000 0000 0000 0000			
0x010	PFR4[B,H,W] ---- ---- ---- ---- 0000 0000 0000 0000			
0x014	PFR5[B,H,W] ---- ---- ---- ---- 0000 0000 0000 0000			
0x018	PFR6[B,H,W] ---- ---- ---- ---- 0000 0000 0000 0000			
0x01C	PFR7[B,H,W] ---- ---- ---- ---- 0000 0000 0000 0000			
0x020	PFR8[B,H,W] ---- ---- ---- ---- 0000 0000 0000 0000			
0x024	PFR9[B,H,W] ---- ---- ---- ---- 0000 0000 0000 0000			
0x028	PFRA[B,H,W] ---- ---- ---- ---- 0000 0000 0000 0000			
0x02C	PFRB[B,H,W] ---- ---- ---- ---- 0000 0000 0000 0000			
0x030	PFRC[B,H,W] ---- ---- ---- ---- 0000 0000 0000 0000			
0x034	PFRD[B,H,W] ---- ---- ---- ---- 0000 0000 0000 0000			
0x038	PFRE[B,H,W] ---- ---- ---- ---- 0000 0000 0000 0000			
0x03C	PFRF[B,H,W] ---- ---- ---- ---- 0000 0000 0000 0000			
0x040 - 0x0FC	-	-	-	-

Base_Address + Address	Register			
	+3	+2	+1	+0
0x100	PCR0[B,H,W] ---- ---- ---- ---- 0000 0000 0001 1111			
0x104	PCR1[B,H,W] ---- ---- ---- ---- 0000 0000 0000 0000			
0x108	PCR2[B,H,W] ---- ---- ---- ---- 0000 0000 0000 0000			
0x10C	PCR3[B,H,W] ---- ---- ---- ---- 0000 0000 0000 0000			
0x110	PCR4[B,H,W] ---- ---- ---- ---- 0000 0000 0000 0000			
0x114	PCR5[B,H,W] ---- ---- ---- ---- 0000 0000 0000 0000			
0x118	PCR6[B,H,W] ---- ---- ---- ---- 0000 0000 0000 0000			
0x11C	PCR7[B,H,W] ---- ---- ---- ---- 0000 0000 0000 0000			
0x120	PCRB[B,H,W] ---- ---- ---- ---- 0000 0000 0000 0000			
0x124	PCR9[B,H,W] ---- ---- ---- ---- 0000 0000 0000 0000			
0x128	PCRA[B,H,W] ---- ---- ---- ---- 0000 0000 0000 0000			
0x12C	PCRB[B,H,W] ---- ---- ---- ---- 0000 0000 0000 0000			
0x130	PCRC[B,H,W] ---- ---- ---- ---- 0000 0000 0000 0000			
0x134	PCRD[B,H,W] ---- ---- ---- ---- 0000 0000 0000 0000			
0x138	PCRE[B,H,W] ---- ---- ---- ---- 0000 0000 0000 0000			
0x13C	PCRF[B,H,W] ---- ---- ---- ---- 0000 0000 0000 0000			
0x140 - 0x1FC	-			
0x200	DDR0[B,H,W] ---- ---- ---- ---- 0000 0000 0000 0000			

Base_Address + Address	Register			
	+3	+2	+1	+0
0x204	DDR1[B,H,W] ---- ---- ---- ---- 0000 0000 0000 0000			
0x208	DDR2[B,H,W] ---- ---- ---- ---- 0000 0000 0000 0000			
0x20C	DDR3[B,H,W] ---- ---- ---- ---- 0000 0000 0000 0000			
0x210	DDR4[B,H,W] ---- ---- ---- ---- 0000 0000 0000 0000			
0x214	DDR5[B,H,W] ---- ---- ---- ---- 0000 0000 0000 0000			
0x218	DDR6[B,H,W] ---- ---- ---- ---- 0000 0000 0000 0000			
0x21C	DDR7[B,H,W] ---- ---- ---- ---- 0000 0000 0000 0000			
0x220	DDR8[B,H,W] ---- ---- ---- ---- 0000 0000 0000 0000			
0x224	DDR9[B,H,W] ---- ---- ---- ---- 0000 0000 0000 0000			
0x228	DDRA[B,H,W] ---- ---- ---- ---- 0000 0000 0000 0000			
0x22C	DDRB[B,H,W] ---- ---- ---- ---- 0000 0000 0000 0000			
0x230	DDRC[B,H,W] ---- ---- ---- ---- 0000 0000 0000 0000			
0x234	DDRD[B,H,W] ---- ---- ---- ---- 0000 0000 0000 0000			
0x238	DDRE[B,H,W] ---- ---- ---- ---- 0000 0000 0000 0000			
0x23C	DDRF[B,H,W] ---- ---- ---- ---- 0000 0000 0000 0000			
0x240 - 0x2FC	-	-	-	-
0x300	PDIR0[B,H,W] ---- ---- ---- ---- 0000 0000 0000 0000			
0x304	PDIR1[B,H,W] ---- ---- ---- ---- 0000 0000 0000 0000			

Base_Address + Address	Register			
	+3	+2	+1	+0
0x308	PDIR2[B,H,W] ---- ---- ---- ---- 0000 0000 0000 0000			
0x30C	PDIR3[B,H,W] ---- ---- ---- ---- 0000 0000 0000 0000			
0x310	PDIR4[B,H,W] ---- ---- ---- ---- 0000 0000 0000 0000			
0x314	PDIR5[B,H,W] ---- ---- ---- ---- 0000 0000 0000 0000			
0x318	PDIR6[B,H,W] ---- ---- ---- ---- 0000 0000 0000 0000			
0x31C	PDIR7[B,H,W] ---- ---- ---- ---- 0000 0000 0000 0000			
0x320	PDIR8[B,H,W] ---- ---- ---- ---- 0000 0000 0000 0000			
0x324	PDIR9[B,H,W] ---- ---- ---- ---- 0000 0000 0000 0000			
0x328	PDIRA[B,H,W] ---- ---- ---- ---- 0000 0000 0000 0000			
0x32C	PDIRB[B,H,W] ---- ---- ---- ---- 0000 0000 0000 0000			
0x330	PDIRC[B,H,W] ---- ---- ---- ---- 0000 0000 0000 0000			
0x334	PDIRD[B,H,W] ---- ---- ---- ---- 0000 0000 0000 0000			
0x338	PDIRE[B,H,W] ---- ---- ---- ---- 0000 0000 0000 0000			
0x33C	PDIRF[B,H,W] ---- ---- ---- ---- 0000 0000 0000 0000			
0x340 - 0x3FC	-	-	-	-
0x400	PDOR0[B,H,W] ---- ---- ---- ---- 0000 0000 0000 0000			
0x404	PDOR1[B,H,W] ---- ---- ---- ---- 0000 0000 0000 0000			
0x408	PDOR2[B,H,W] ---- ---- ---- ---- 0000 0000 0000 0000			

Base_Address + Address	Register			
	+3	+2	+1	+0
0x40C	PDOR3[B,H,W] ---- ---- ---- ---- 0000 0000 0000 0000			
0x410	PDOR4[B,H,W] ---- ---- ---- ---- 0000 0000 0000 0000			
0x414	PDOR5[B,H,W] ---- ---- ---- ---- 0000 0000 0000 0000			
0x418	PDOR6[B,H,W] ---- ---- ---- ---- 0000 0000 0000 0000			
0x41C	PDOR7[B,H,W] ---- ---- ---- ---- 0000 0000 0000 0000			
0x420	PDOR8[B,H,W] ---- ---- ---- ---- 0000 0000 0000 0000			
0x424	PDOR9[B,H,W] ---- ---- ---- ---- 0000 0000 0000 0000			
0x428	PDORA[B,H,W] ---- ---- ---- ---- 0000 0000 0000 0000			
0x42C	PDORB[B,H,W] ---- ---- ---- ---- 0000 0000 0000 0000			
0x430	PDORC[B,H,W] ---- ---- ---- ---- 0000 0000 0000 0000			
0x434	PDORD[B,H,W] ---- ---- ---- ---- 0000 0000 0000 0000			
0x438	PDORE[B,H,W] ---- ---- ---- ---- 0000 0000 0000 0000			
0x43C	PDORF[B,H,W] ---- ---- ---- ---- 0000 0000 0000 0000			
0x440 - 0x4FC	-	-	-	-
0x500	ADE[B,H,W] 1111 1111 1111 1111 1111 1111 1111 1111			
0x504 - 0x57C	-	-	-	-
0x580	SPSR[B,H,W] ---- ---- ---- ---- ---- ---- ---0 ---1 *1 ---- ---- ---- ---- ---- ---- ---0 0101 *2			
0x584 - 0x5FC	-	-	-	-
0x600	EPFR00[B,H,W]			

Base_Address + Address	Register			
	+3	+2	+1	+0
	---- --00 ---- --11 --0- --0- 0000 --00			
0x604	EPFR01[B,H,W] 0000 0000 0000 0000 ---0 0000 0000 0000			
0x608	EPFR02[B,H,W] 0000 0000 0000 0000 ---0 0000 0000 0000			
0x60C	EPFR03[B,H,W] 0000 0000 0000 0000 ---0 0000 0000 0000			
0x610	EPFR04[B,H,W] --00 0000 --00 00-- --00 0000 -000 00--			
0x614	EPFR05[B,H,W] --00 0000 --00 00-- --00 0000 --00 00--			
0x618	EPFR06[B,H,W] 0000 0000 0000 0000 0000 0000 0000 0000			
0x61C	EPFR07[B,H,W] ---- 0000 0000 0000 0000 0000 0000 ----			
0x620	EPFR08[B,H,W] ---- 0000 0000 0000 0000 0000 0000 0000			
0x624	EPFR09[B,H,W] 0000 0000 0000 0000 0000 0000 0000 0000			
0x628	EPFR10[B,H,W] 0000 0000 0000 0000 0000 0000 0000 0000			
0x62C	EPFR11[B,H,W] ---- --00 0000 0000 0000 0000 0000 0000			
0x630	EPFR12[B,H,W] --00 0000 --00 00-- --00 0000 --00 00--			
0x634	EPFR13[B,H,W] --00 0000 --00 00-- --00 0000 --00 00--			
0x638	EPFR14[B,H,W] 0000 0000 0000 0000 0000 0000 0000 0000			
0x63C	EPFR15[B,H,W] 0000 0000 0000 0000 0000 0000 0000 0000			
0x640	EPFR16[B,H,W] ---- 0000 0000 0000 0000 0000 0000 ----			
0x644	EPFR17[B,H,W]			

Base_Address + Address	Register			
	+3	+2	+1	+0
	---- 0000 0000 0000 0000 0000 0000 ----			
0x648	EPFR18[B,H,W] ---- ---- ---- ---- ---- ---- ---- 0000			
0x64C - 0x6FC	-	-	-	-
0x700	PZR0[B,H,W] ---- ---- ---- ---- 0000 0000 0000 0000			
0x704	PZR1[B,H,W] ---- ---- ---- ---- 0000 0000 0000 0000			
0x708	PZR2[B,H,W]			
	---- ---- ---- ---- 0000 0000 0000 0000			
0x70C	PZR3[B,H,W] ---- ---- ---- ---- 0000 0000 0000 0000			
0x710	PZR4[B,H,W] ---- ---- ---- ---- 0000 0000 0000 0000			
0x714	PZR5[B,H,W] ---- ---- ---- ---- 0000 0000 0000 0000			
0x718	PZR6[B,H,W] ---- ---- ---- ---- 0000 0000 0000 0000			
0x71C	PZR7[B,H,W] ---- ---- ---- ---- 0000 0000 0000 0000			
0x720	PZR8[B,H,W] ---- ---- ---- ---- 0000 0000 0000 0000			
0x724	PZR9[B,H,W] ---- ---- ---- ---- 0000 0000 0000 0000			
0x728	PZRA[B,H,W] ---- ---- ---- ---- 0000 0000 0000 0000			
0x72C	PZRB[B,H,W] ---- ---- ---- ---- 0000 0000 0000 0000			
0x730	PZRC[B,H,W] ---- ---- ---- ---- 0000 0000 0000 0000			
0x734	PZRD[B,H,W] ---- ---- ---- ---- 0000 0000 0000 0000			

0x738	PZRE[B,H,W]

Base_Address + Address	Register			
	+3	+2	+1	+0
	---- ---- ---- ---- 0000 0000 0000 0000			
0x73C	PZRF[B,H,W] ---- ---- ---- ---- 0000 0000 0000 0000			
0x740 - 0x7FC	-	-	-	-
0x800	*			
0x804	*			
0x808 - 0xFFC	-	-	-	-

1.23. HDMI-CEC/Remote Control Receiver

ch.0 Base_Address : 0x4003_4000

ch.1 Base_Address : 0x4003_4100

Base_Address + Address	Register			
	+3	+2	+1	+0
0x000	-	-	-	TXCTRL[B,H,W] --0000-0
0x004	-	-	-	TXDATA[B,H,W] 00000000
0x008	-	-	-	TXSTS[B,H,W] --00---0
0x00C	-	-	-	SFREE[B,H,W] ----0000
0x010 - 0x03F	-	-	-	-
0x040	-	-	RCCR[B,H,W] 0---0000	RCST[B,H,W] 00000000
0x044	-	-	RCSHW[B,H,W] 00000000	RCDAHW[B,H,W] 00000000
0x048	-	-	RCDBHW[B,H,W] 00000000	-
0x04C	-	-	RCADR1[B,H,W] ---00000	RCADR2[B,H,W] ---00000
0x050	-	-	RCDTHH[B,H,W] 00000000	RCDTHL[B,H,W] 00000000
0x054	-	-	RCDTLH[B,H,W] 00000000	RCDTLL[B,H,W] 00000000
0x058	-	-	RCCKD[H,W] ---00000 00000000	
0x05C	-	-	RCRC[B,H,W] ---0---0	RCRHW[B,H,W] 00000000
0x060	-	-	RCLE[B,H,W] 00000-00	-
0x064	-	-	RCLELW[B,H,W] 00000000	RCLESW[B,H,W] 00000000
0x068 - 0x0FC	-	-	-	-

1.24. LVD

Base_Address : 0x4003_5000

■ TYPE0/TYPE1/TYPE2/TYPE4/TYPE5 products

Base_Address + Address	Register			
	+3	+2	+1	+0
0x000	-	-	-	LVD_CTL [B,H,W] 010000--
0x004	-	-	-	LVD_STR [B,H,W] 0-------
0x008	-	-	-	LVD_CLR [B,H,W] 1-------
0x00C	LVD_RLR[W] 00000000 00000000 00000000 00000001			
0x010	-	-	-	LVD_STR2 0-------
0x014 - 0xFFC	-	-	-	-

■ TYPE3, and TYPE6 to TYPE12 products

Base_Address + Address	Register			
	+3	+2	+1	+0
0x000	-	-	LVD_CTL[B, H, W] 1-0001-- 0-00000- *6 100001-- 000100-- *7 100001-- 000011-- *8	
0x004	-	-	-	LVD_STR[B,H,W] 0-------
0x008	-	-	-	LVD_CLR[B,H,W] 1-------
0x00C	LVD_RLR[W] 00000000 00000000 00000000 00000001			
0x010	-	-	-	LVD_STR2 01------
0x014 - 0x7FC	-	-	-	-

1.25. DS_Mode

Base_Address : 0x4003_5100

Base_Address + Address	Register			
	+3	+2	+1	+0
0x000	-	-	-	REG_CTL[B,H,W] -------0
0x004	-	-	-	RCK_CTL[B,H,W] ------01
0x008 - 0x6FC	-	-	-	-
0x700	-	-	-	PMD_CTL[B,H,W] -------0
0x704	-	-	-	WRFSR[B,H,W] ------00
0x708	-	-	WIFSR[B,H,W] ------00 00000000	
0x70C	-	-	WIER[B,H,W] ------00 00000-00	
0x710	-	-	-	WILVR[B,H,W] -----000
0x714	-	-	-	DSRAMR[B,H,W] ------00
0x718 - 0x7FC	-	-	-	-
0x800	BUR04[B,H,W] 00000000	BUR03[B,H,W] 00000000	BUR02[B,H,W] 00000000	BUR01[B,H,W] 00000000
0x804	BUR08[B,H,W] 00000000	BUR07[B,H,W] 00000000	BUR06[B,H,W] 00000000	BUR05[B,H,W] 00000000
0x808	BUR012[B,H,W] 00000000	BUR11[B,H,W] 00000000	BUR10[B,H,W] 00000000	BUR09[B,H,W] 00000000
0x80C	BUR16[B,H,W] 00000000	BUR15[B,H,W] 00000000	BUR14[B,H,W] 00000000	BUR13[B,H,W] 00000000
0x810 - 0xEFC	-	-	-	-

1.26. USB Clock

Base_Address : 0x4003_6000

■ Products other than TYPE2

Base_Address + Address	Register			
	+3	+2	+1	+0
0x000	-	-	-	UCCR[B,H,W] ------00
0x004	-	-	-	UPCR1[B,H,W] ------00
0x008	-	-	-	UPCR2[B,H,W] -----000
0x00C	-	-	-	UPCR3[B,H,W] ---00000
0x010	-	-	-	UPCR4[B,H,W] ---10111 *1 -0111011 *2
0x014	-	-	-	UP_STR[B,H,W] -------0
0x018	-	-	-	UPINT_ENR[B,H,W] -------0
0x01C	-	-	-	UPINT_CLR[B,H,W] -------0
0x020	-	-	-	UPINT_STR[B,H,W] -------0
0x024	-	-	-	UPCR5[B,H,W] ----0100
0x028 - 0x02C	-	-	-	-
0x030	-	-	-	USBEN[B,H,W] -------0
0x034 - 0x0FC	-	-	-	-

■ TYPE2 products

Base_Address	Register			
+ Address	+3	+2	+1	+0
0x000	-	-	-	UCCR[B,H,W] -0000000
0x004	-	-	-	UPCR1[B,H,W] ------00
0x008	-	-	-	UPCR2[B,H,W] -----000
0x00C	-	-	-	UPCR3[B,H,W] ---00000
0x010	-	-	-	UPCR4[B,H,W] -0111011
0x014	-	-	-	UP_STR[B,H,W] -------0
0x018	-	-	-	UPINT_ENR[B,H,W] -------0
0x01C	-	-	-	UPINT_CLR[B,H,W] -------0
0x020	-	-	-	UPINT_STR[B,H,W] -------0
0x024	-	-	-	UPCR5[B,H,W] ----0100
0x028	-	-	-	UPCR6[B,H,W] ----0010
0x02C	-	-	-	UPCR7[B,H,W] -------0
0x030	-	-	-	USBEN[B,H,W] -------0
0x034	-	-	-	USBEN1[B,H,W] -------0
0x038 - 0x0FC	-	-	-	-

1.27. CAN_Prescaler

Base_Address : 0x4003_7000

Base_Address + Address	Register			
	+3	+2	+1	+0
0x000	-	-	-	CANPRE[B,H,W] ----1011
0x004 - 0xFFC	-	-	-	-

1.28. MFS

■ Products other than TYPE8/TYPE12

ch.0 Base_Address : 0x4003_8000
ch.1 Base_Address : 0x4003_8100
ch.2 Base_Address : 0x4003_8200
ch.3 Base_Address : 0x4003_8300
ch.4 Base_Address : 0x4003_8400
ch.5 Base_Address : 0x4003_8500
ch.6 Base_Address : 0x4003_8600
ch.7 Base_Address : 0x4003_8700

Base_Address + Address	Register			
	+3	+2	+1	+0
0x000	-	-	SCR/ IBCR[B,H,W] 0--00000	SMR[B,H,W] 000-00-0
0x004	-	-	SSR[B,H,W] 0-000011	ESCR/ IBSR[B,H,W] 00000000
0x008	-	-	RDR/TDR[H,W] -------0 00000000	
0x00C	-	-	BGR1[B,H,W] 00000000	BGR0[B,H,W] 00000000
0x010	-	-	ISMK[B,H,W] --------	ISBA[B,H,W] --------
0x014	-	-	FCR1[B,H,W] ---00100	FCR0[B,H,W] -0000000
0x018	-	-	FBYTE2[B,H,W] 00000000	FBYTE1[B,H,W] 00000000
0x1C			EIBCR[B, H, W] --001100	-
0x020 - 0x0FC	-	-	-	-

MFS Noise Filter Control Base_Address : 0x4003_8800

Base_Address + Address	Register			
	+3	+2	+1	+0
0x000	-	-	I2CDNF[B,H,W] 00000000	
0x004 - 0x0FC	-	-	-	-

■ TYPE8/TYPE12 products

ch.0 Base_Address : 0x4003_8000
ch.1 Base_Address : 0x4003_8100
ch.2 Base_Address : 0x4003_8200
ch.3 Base_Address : 0x4003_8300
ch.4 Base_Address : 0x4003_8400
ch.5 Base_Address : 0x4003_8500
ch.6 Base_Address : 0x4003_8600
ch.7 Base_Address : 0x4003_8700
ch.8 Base_Address : 0x4003_8800
ch.9 Base_Address : 0x4003_8900
ch.10 Base_Address : 0x4003_8A00
ch.11 Base_Address : 0x4003_8B00
ch.12 Base_Address : 0x4003_8C00
ch.13 Base_Address : 0x4003_8D00
ch.14 Base_Address : 0x4003_8E00
ch.15 Base_Address : 0x4003_8F00

Base_Address + Address	Register			
	+3	+2	+1	+0
0x000	-	-	SCR/ IBCR[B,H,W] 0--00000	SMR[B,H,W] 00-000-0
0x004	-	-	SSR[B,H,W] 0-000011	ESCR/ IBSR[B,H,W] 00000000
0x008	-	-	RDR/TDR[H,W] -------0 00000000	
0x00C	-	-	BGR1[B,H,W] 00000000	BGR0[B,H,W] 00000000
0x010	-	-	ISMK[B,H,W] --------	ISBA[B,H,W] --------
0x014	-	-	FCR1[B,H,W] ---00100	FCR0[B,H,W] -0000000
0x018	-	-	FBYTE2[B,H,W] 00000000	FBYTE1[B,H,W] 00000000
0x1C			EIBCR[B, H, W --001000	-
0x020 - 0x0FC	-	-	-	-

1.29. CRC

Base_Address : 0x4003_9000

Base_Address + Address	Register			
	+3	+2	+1	+0
0x000	-	-	-	CRCCR[B,H,W] -0000000
0x004	CRCINIT[B,H,W] 11111111 11111111 11111111 11111111			
0x008	CRCIN[B,H,W] 00000000 00000000 00000000 00000000			
0x00C	CRCR[B,H,W] 11111111 11111111 11111111 11111111			

1.30. Watch Counter

Base_Address : 0x4003_A000

Base_Address + Address	Register			
	+3	+2	+1	+0
0x000	-	WCCR[B,H,W] 00--0000	WCRL[B,H,W] --000000	WCRD[B,H,W] --000000
0x004 - 0x00C	-	-	-	-
0x010	-	-	CLK_SEL[B,H,W] -----000 -------0	
0x014	-	-	-	CLK_EN[B,H,W] ------00
0x018 - 0xFFC	-	-	-	-

1.31. RTC

Base_Address : 0x4003_B000

■ TYPE3/TYPE4/TYPE5 products

Base_Address + Address	Register			
	+3	+2	+1	+0
0x000	WTCR1[B,H,W] 00000000 00000000 ---00000 -00000-0			
0x004	WTCR2[B,H,W] -------- -------- -----000 -------0			
0x008	WTBR[B,H,W] -------- 00000000 00000000 00000000			
0x00C	WTDR[B,H,W] --000000	WTHR[B,H,W] --000000	WTMIR[B,H,W] -0000000	WTSR[B,H,W] -0000000
0x010	-	WTYR[B,H,W] 00000000	WTMOR[B,H,W] ---00000	WTDW[B,H,W] -----000
0x014	ALDR[B,H,W] --000000	ALHR[B,H,W] --000000	ALMIR[B,H,W] -0000000	-
0x018	-	ALYR[B,H,W] 00000000	ALMOR[B,H,W] ---00000	-
0x01C	WTTR[B,H,W] -------- ------00 00000000 00000000			
0x020	-	-	WTCLKM[B,H,W] ------00	WTCLKS [B,H,W] -------0
0x024	-	-	WTCALEN[B,H,W] -------0	WTCAL [B,H,W] -0000000
0x028	-	-	WTDIVEN[B,H,W] ------00	WTDIV [B,H,W] ----0000
0x02C - 0xFFC	-	-	-	-

■ TYPE6 to TYPE12 products

Base_Address + Address	Register			
	+3	+2	+1	+0
0x000	WTCR1[B,H,W] 00000000 00000000 ---00000 -00000-0			
0x004	WTCR2[B,H,W] -------- -------- -----000 -------0			
0x008	WTBR[B,H,W] -------- 00000000 00000000 00000000			
0x00C	WTDR[B,H,W] --000000	WTHR[B,H,W] --000000	WTMIR[B,H,W] -0000000	WTSR[B,H,W] -0000000
0x010	-	WTYR[B,H,W] 00000000	WTMOR[B,H,W] ---00000	WTDW[B,H,W] -----000
0x014	ALDR[B,H,W] --000000	ALHR[B,H,W] --000000	ALMIR[B,H,W] -0000000	-
0x018	-	ALYR[B,H,W] 00000000	ALMOR[B,H,W] ---00000	-
0x01C	WTTR[B,H,W] -------- ------00 00000000 00000000			
0x020	-	-	WTCLKM[B,H,W] ------00	WTCLKS [B,H,W] -------0
0x024	-	WTCALEN[B,H,W] -------0	WTCAL [B,H,W] ------00 00000000	
0x028	-	-	WTDIVEN[B,H,W] ------00	WTDIV [B,H,W] ----0000
0x02C	-	-	-	WTCALPRD [B,H,W] --010011
0x030	-	-	-	WTCOSEL [B,H,W] -------0
0x034 - 0xFFC	-	-	-	-

1.32. Low-speed CR Prescaler

Base_Address : 0x4003_B000

Base_Address + Address	Register			
	+3	+2	+1	+0
0x000	-	-	-	LCR_PRSLD[B,H,W] --010011
0x004 - 0xFFC	-	-	-	-

1.33. EXT-Bus I/F

Base_Address : 0x4003_F000

Base_Address + Address	Register			
	+3	+2	+1	+0
0x000	MODE0[W] -------- -------- --000-00 00000000			
0x004	MODE1[W] -------- -------- --000-00 00000000			
0x008	MODE2[W] -------- -------- --000-00 00000000			
0x00C	MODE3[W] -------- -------- --000-00 00000000			
0x010	MODE4[W] -------- -------- --000-00 00000001			
0x014	MODE5[W] -------- -------- --000-00 00000000			
0x018	MODE6[W] -------- -------- --000-00 00000000			
0x01C	MODE7[W] -------- -------- --000-00 00000000			
0x020	TIM0[W] 00000101 01011111 11110000 00001111			
0x024	TIM1[W] 00000101 01011111 11110000 00001111			
0x028	TIM2[W] 00000101 01011111 11110000 00001111			
0x02C	TIM3[W] 00000101 01011111 11110000 00001111			
0x030	TIM4[W] 00000101 01011111 11110000 00001111			
0x034	TIM5[W] 00000101 01011111 11110000 00001111			
0x038	TIM6[W] 00000101 01011111 11110000 00001111			
0x03C	TIM7[W] 00000101 01011111 11110000 00001111			

Base_Address + Address	Register			
	+3	+2	+1	+0
0x040	AREA0[W] -------- -0001111 -------- 00000000			
0x044	AREA1[W] -------- -0001111 -------- 00010000			
0x048	AREA2[W] -------- -0001111 -------- 00100000			
0x04C	AREA3[W] -------- -0001111 -------- 00110000			
0x050	AREA4[W] -------- -0001111 -------- 01000000			
0x054	AREA5[W] -------- -0001111 -------- 01010000			
0x058	AREA6[W] -------- -0001111 -------- 01100000			
0x05C	AREA7[W] -------- -0001111 -------- 01110000			
0x060	ATIM0[W] -------- -------- ----0100 01011111			
0x064	ATIM1[W] -------- -------- ----0100 01011111			
0x068	ATIM2[W] -------- -------- ----0100 01011111			
0x06C	ATIM3[W] -------- -------- ----0100 01011111			
0x070	ATIM4[W] -------- -------- ----0100 01011111			
0x074	ATIM5[W] -------- -------- ----0100 01011111			
0x078	ATIM6[W] -------- -------- ----0100 01011111			
0x07C	ATIM7[W] -------- -------- ----0100 01011111			
0x080 - 0x2FC	-	-	-	-
0x300	DCLKR[W] -------- -------- -------- ---00001			
0x304 - 0x3FC	-	-	-	-

1.34. USB

ch.0 Base_Address : 0x4004_2100
ch.1 Base_Address : 0x4005_2100

Base_Address + Address	Register			
	+3	+2	+1	+0
0x000	-	-	HCNT1[B,H,W] -----001	HCNT0[B,H,W] 00000000
0x004	-	-	HERR[B,H,W] 00000011	HIRQ[B,H,W] 0-000000
0x008	-	-	HFCOMP[B,H,W] 00000000	HSTATE[B,H,W] --010010
0x00C	-	-	HRTIMER(1/0)[B,H,W] 00000000 00000000	
0x010	-	-	HADR[B,H,W] -0000000	HRTIMER(2)[B,H,W] -----00
0x014	-	-	HEOF(1/0)[B,H,W] --000000 00000000	
0x018	-	-	HFRAME(1/0)[B,H,W] -----000 00000000	
0x01C	-	-	-	HTOKEN [B,H,W] 00000000
0x020	-	-	UDCC[B,H,W] -------- 10100-00	
0x024	-	-	EP0C[H,W] ------0- -1000000	
0x028	-	-	EP1C[H,W] 01100001 00000000	
0x02C	-	-	EP2C[H,W] 0110000- -1000000	
0x030	-	-	EP3C[H,W] 0110000- -1000000	
0x034	-	-	EP4C[H,W] 0110000- -1000000	
0x038	-	-	EP5C[H,W] 0110000- -1000000	
0x03C	-	-	TMSP[H,W] -----000 00000000	

Base_Address + Address	Register			
	+3	+2	+1	+0
0x040	-	-	UDCIE[B,H,W] --000000	UDCS[B,H,W] --000000
0x044	-	-	EP0IS[H,W] 10---1-- --------	
0x048	-	-	EP0OS[H,W] 100--00- -XXXXXXX	
0x04C	-	-	EP1S[H,W] 100-000X XXXXXXXX	
0x050	-	-	EP2S[H,W] 100-000- -XXXXXXX	
0x054	-	-	EP3S[H,W] 100-000- -XXXXXXX	
0x058	-	-	EP4S[H,W] 100-000- -XXXXXXX	
0x05C	-	-	EP5S[H,W] 100-000- -XXXXXXX	
0x060	-	-	EP0DTH [B,H,W] XXXXXXXX	EP0DTL [B,H,W] XXXXXXXX
0x064	-	-	EP1DTH [B,H,W] XXXXXXXX	EP1DTL [B,H,W] XXXXXXXX
0x068	-	-	EP2DTH [B,H,W] XXXXXXXX	EP2DTL [B,H,W] XXXXXXXX
0x06C	-	-	EP3DTH [B,H,W] XXXXXXXX	EP3DTL [B,H,W] XXXXXXXX
0x070	-	-	EP4DTH [B,H,W] XXXXXXXX	EP4DTL [B,H,W] XXXXXXXX
0x074	-	-	EP5DTH [B,H,W] XXXXXXXX	EP5DTL [B,H,W] XXXXXXXX
0x078 - 0x07C	-	-	-	-

1.35. DMAC

Base_Address : 0x4006_0000

Base_Address + Address	Register			
	+3	+2	+1	+0
0x000	DMACR[B,H,W] 00-00000 -------- -------- --------			
0x010	DMACA0[B,H,W] 00000000 0---0000 00000000 00000000			
0x014	DMACB0[B,H,W] --000000 00000000 00000000 -------0			
0x018	DMACSA0[B,H,W] 00000000 00000000 00000000 00000000			
0x01C	DMACDA0[B,H,W] 00000000 00000000 00000000 00000000			
0x020	DMACA1[B,H,W] 00000000 0---0000 00000000 00000000			
0x024	DMACB1[B,H,W] --000000 00000000 00000000 -------0			
0x028	DMACSA1[B,H,W] 00000000 00000000 00000000 00000000			
0x02C	DMACDA1[B,H,W] 00000000 00000000 00000000 00000000			
0x030	DMACA2[B,H,W] 00000000 0---0000 00000000 00000000			
0x034	DMACB2[B,H,W] --000000 00000000 00000000 -------0			
0x038	DMACSA2[B,H,W] 00000000 00000000 00000000 00000000			
0x03C	DMACDA2[B,H,W] 00000000 00000000 00000000 00000000			
0x040	DMACA3[B,H,W] 00000000 0---0000 00000000 00000000			
0x044	DMACB3[B,H,W] --000000 00000000 00000000 -------0			
0x048	DMACSA3[B,H,W] 00000000 00000000 00000000 00000000			
0x04C	DMACDA3[B,H,W] 00000000 00000000 00000000 00000000			

Base_Address + Address	Register			
	+3	+2	+1	+0
0x050	DMACA4[B,H,W] 00000000 0---0000 00000000 00000000			
0x054	DMACB4[B,H,W] --000000 00000000 00000000 -------0			
0x058	DMACSA4[B,H,W] 00000000 00000000 00000000 00000000			
0x05C	DMACDA4[B,H,W] 00000000 00000000 00000000 00000000			
0x060	DMACA5[B,H,W] 00000000 0---0000 00000000 00000000			
0x064	DMACB5[B,H,W] --000000 00000000 00000000 -------0			
0x068	DMACSA5[B,H,W] 00000000 00000000 00000000 00000000			
0x06C	DMACDA5[B,H,W] 00000000 00000000 00000000 00000000			
0x070	DMACA6[B,H,W] 00000000 0---0000 00000000 00000000			
0x074	DMACB6[B,H,W] --000000 00000000 00000000 -------0			
0x078	DMACSA6[B,H,W] 00000000 00000000 00000000 00000000			
0x07C	DMACDA6[B,H,W] 00000000 00000000 00000000 00000000			
0x080	DMACA7[B,H,W] 00000000 0---0000 00000000 00000000			
0x084	DMACB7[B,H,W] --000000 00000000 00000000 -------0			
0x088	DMACSA7[B,H,W] 00000000 00000000 00000000 00000000			
0x08C	DMACDA7[B,H,W] 00000000 00000000 00000000 00000000			
0x090 - 0x0FC	-	-	-	-

1.36. CAN

ch.0 Base_Address : 0x4006_2000
ch.1 Base_Address : 0x4006_3000

Base_Address + Address	Register			
	+3	+2	+1	+0
0x000	STATR[B,H,W] -------- 00000000		CTRLR[B,H,W] -------- 000-0001	
0x004	BTR[B,H,W] -0100011 00000001		ERRCNT[B,H,W] 00000000 00000000	
0x008	TESTR[B,H,W] -------- X00000--		INTR[B,H,W] 00000000 00000000	
0x00C	-	-	BRPER[B,H,W] -------- ----0000	
0x010	IF1CMSK[B,H,W] -------- 00000000		IF1CREQ[B,H,W] 0------- 00000001	
0x014	IF1MSK2[B,H,W] 11-11111 11111111		IF1MSK1[B,H,W] 11111111 11111111	
0x018	IF1ARB2[B,H,W] 00000000 00000000		IF1ARB1[B,H,W] 00000000 00000000	
0x01C	-	-	IF1MCTR[B,H,W] 00000000 0---0000	
0x020	IF1DTA2[B,H,W] 00000000 00000000		IF1DTA1[B,H,W] 00000000 00000000	
0x024	IF1DTB2[B,H,W] 00000000 00000000		IF1DTB1[B,H,W] 00000000 00000000	
0x028 - 0x02F	-	-	-	-
0x030	IF1DTA1[B,H,W] 00000000 00000000		IF1DTA2[B,H,W] 00000000 00000000	
0x034	IF1DTB1[B,H,W] 00000000 00000000		IF1DTB2[B,H,W] 00000000 00000000	
0x038 - 0x03C	-	-	-	-
0x040	IF2CMSK[B,H,W] -------- 00000000		IF2CREQ[B,H,W] 0------- 00000001	
0x044	IF2MSK2[B,H,W] 11-11111 11111111		IF2MSK1[B,H,W] 11111111 11111111	

Base_Address + Address	Register			
	+3	+2	+1	+0
0x048	IF2ARB2[B,H,W] 00000000 00000000		IF2ARB1[B,H,W] 00000000 00000000	
0x04C	-	-	IF2MCTR[B,H,W] 00000000 0---0000	
0x050	IF2DTA2[B,H,W] 00000000 00000000		IF2DTA1[B,H,W] 00000000 00000000	
0x054	IF2DTB2[B,H,W] 00000000 00000000		IF2DTB1[B,H,W] 00000000 00000000	
0x058 - 0x05C	-	-	-	-
0x060	IF2DTA1[B,H,W] 00000000 00000000		IF2DTA2[B,H,W] 00000000 00000000	
0x064	IF2DTB1[B,H,W] 00000000 00000000		IF2DTB2[B,H,W] 00000000 00000000	
0x068 - 0x07C	-	-	-	-
0x080	TREQR2[B,H,W] 00000000 00000000		TREQR1[B,H,W] 00000000 00000000	
0x084 – 0x08F	-	-	-	-
0x090	NEWDT2[B,H,W] 00000000 00000000		NEWDT1[B,H,W] 00000000 00000000	
0x094 - 0x09F	-	-	-	-
0x0A0	INTPND2[B,H,W] 00000000 00000000		INTPND1[B,H,W] 00000000 00000000	
0x0A4 - 0x0AF	-	-	-	-
0x0B0	MSGVAL2[B,H,W] 00000000 00000000		MSGVAL1[B,H,W] 00000000 00000000	
0x0B4 - 0xFFC	-	-	-	-

1.37. Ether-MAC

ch.0 Base_Address : 0x4006_4000

ch.1 Base_Address : 0x4006_7000

<Note>

For the register details of Ether-MAC block, refer to the "Ethernet Part".

1.38. Ether-Control

Base_Address : 0x4006_6000

<Note>

For the register details of Ether-Control block, refer to the "Ethernet Part".

1.39. WorkFlash_IF

Base_Address : 0x200E_0000

Base_Address	Register			
+ Address	+3	+2	+1	+0
0x000	WFASZR[B,H,W]			
0x004	WFRWTR[B,H,W]			
0x008	WFSTR[B,H,W]			
0x00C - 0xFFF	-	-	-	-

<Note>

For the register details of Workflash IF block, refer to the "Flash Programming Manual" of the product used.

B. List of Notes

This section explains notes for each function.

1. Notes when high-speed CR is used for the master clock

1. Notes when high-speed CR is used for the master clock

This section explains notes when the high-speed CR is used for the master clock.

The frequency of the high-speed CR varies depending on the temperature and/or the power supply voltage.
The following table shows notes on each function macro when the high-speed CR is used for the master clock.
Furthermore, pay attention to notes when the high-speed CR is used as an input clock of the PLL and the master clock is selected for PLL.

● Notes on Each Macro

Macro	Function/mode	Notes
Base Clock	HCLK/FCLK	The maximum frequency of the high-speed CR shall not exceed the upper limit of the internal operation clock frequency specified in the "Data Sheet" of the product used.
Timer	Multi-function Timer Base Timer Watch Timer Dual Timer Watch Dog Timer Quadrature	The frequency variation of the high-speed CR should be considered for the timer count value of each macro.
A/D Converter	Sampling Time Compare Tim	Considering the frequency variation of the high-speed CR, the sampling time and the compare time of the A/D converter shall satisfy the specification specified in the "Data Sheet" of the product used.
USB Ethernet-MAC CAN	-	As the frequency accuracy does not meet the required specification, these macros cannot be used when the high-speed CR is used for the master clock.
Multi Function Serial Interface	UART	Even if the frequency of the high-speed CR is the minimum or the maximum value, the baud rate error should be considered. The baud rate error shall not exceed the limit.
	CSIO I2C	The frequency variation of the high-speed CR should be considered for the communication of each macro.
	LIN	As the required frequency accuracy cannot be met, this function cannot be used as master. As slave, this function can be used. As a slave, the specified baud rate has more error at the maximum/minimum frequency of high-speed clock. So, if the error limit of the baud rate is exceeded, this function cannot be used.
Debug Interface	Serial Wire	As the frequency variation of the high-speed CR, the SWV(Serial Wire View) may not be used.
Flash Memory	Serial Write	The serial write cannot be supported for TYPE0, TYPE1, TYPE2, and TYPE4 products When the serial write is required, the clock should be supplied to the X0/X1pins.
External Bus Interface	Clock Output	When the external bus clock output is used, the frequency variation of the high-speed CR should be considered for devices to be connected.

C. List of Limitations

This section shows the differences between series.

1. List of Limitations for TYPE0 Products
2. List of Limitations for TYPE1 Products

1. List of Limitations for TYPE0 Products

This section shows the differences in the MB9A100A Series, MB9B500A/400A/300A/100A Series, MB9A100 Series and MB9B500/400/300/100 Series in a table.

The "Items" in the table are as written in this manual.

Item	Details
Timer Part 1.6.7 Hardware Watchdog Timer Load Register (WDG_LDR)	Following restrictions should be added to the <Notes> of "6.7. Hardware Watchdog Timer Load Register". • If a value is written to WDG_LDR again during the reloading period of the Hardware watchdog timer * (low-speed CR 4 cycle period after reloading the counter), the writing operation is ignored. Read the software of the appropriate register to check whether the writing value have been reflected to WDG_LDR properly. * The condition of counter reloading 1. Clearing watchdog timer (Writing a value to WDG_ICL register) 2. Writing a value to WDG_LDR register
Timer Part 1.6.9 Hardware Watchdog Timer Control Register (WDG_CTL)	Following restrictions should be added to the <Notes> of "6.9. Hardware Watchdog Timer Control Register". After writing "0" to the INTEN (watchdog counter enable) bit of the WDG_CTL register, if "1" is written again within 2 cycles of the low-speed CR (50KHz to 150KHz), operation may resume without reloading the count value from WDG_LDR. When setting the INTEN bit to "1" again after setting it to "0", always ensure a period of 2 clock cycles of the low-speed CR before setting. Alternatively, clear the timer using the WDG_ICL register immediately after writing "1" to INTEN to execute a reload.
Timer Part 3-2 Watch Counter	Following restrictions should be added to "CHAPTER 3-2: Watch Counter". *These restrictions are only for MB9A100 Series and MB9B500/400/300/100 Series. In Sub timer mode or Low speed CR timer mode, when the watch counter with sub crystal oscillator is used, the count value would be delayed from the actual time at the returning from an interrupt, by lengthening the interval of the low speed CR×35 cycles (Typ 350µs) watch counter. In Sub sleep mode or Low speed CR sleep mode, the counter value is not delayed.

Item	Details
Analog Macro Part 1-3.5.13 Sampling Time Selection Register (ADSS)	Following restrictions should be added to "5.13. Sampling Time Selection Register". In this series, the sampling time set in the Sampling Time Setup Register (ADST1) cannot be used. Enable the sampling time set in the Sampling Time Setup Register (ADST0) only. Always write "0" to each bit of the Sampling Time Selection Register (ADSS0 to ADSS3).
Communication Macro Part 1-2.7.9 1-3.5.9 1-4.6.9 1-5.5.12 FIFO Byte Register (FBYTE)	Following notes should be added to "7.9. FIFO Byte Register (FBYTE)" in chapter 1-2, "5.9. FIFO Byte Register (FBYTE)" in chapter 1-3, "6.9. FIFO Byte Register (FBYTE)" in chapter 1-4, "5.12. FIFO Byte Register (FBYTE)" in chapter 1-5. · If all the following conditions are met, the receive data full flag (SSR:RDRF) is not set to "1" despite the valid data of the number of FBYTE settings in the receive FIFO. If the setting value of FBYTE is "2" or more, this operation is not applied. · The setting value of FBYTE is "1". · Both the number of valid data of receive FIFO and the number of FBYTE settings are "1". · The data in receive FIFO is read at the same time when the multi-function serial interface macro receives the data and the received data is written to receive FIFO. However, in case that one of the followings occurs later, the receive data full flag (SSR:RDRF) is set to "1". · Next data is received. · The receive time idle of 8-bit time or more is detected when the receive FIFO idle is enabled (FCR:FRIIE=1).
Communication Macro Part 3-1.2 ■ End-point configuration of the USB device	Following notes should be added to "■End-point configuration of USB device". USB device does not support ISO (isochronous transfer). Only Comb1 of setting combinations is valid.
Communication Macro Part 3-1.3.6 DMA transfer function	Following restrictions should be added to "■ Automatic data size transfer mode". In this series, if the IN direction Automatic data size transfer mode is used in the Short packet transfer, packet transfer may not start even after DMA transfer is finished. In addition, it is prohibited to set USB as both the transfer source and transfer destination. [Workaround] Transfer data using CPU.

<table>
<tr><th>Item</th><th>Details</th></tr>
<tr><td>Communication Macro
Part 3-1.3.7
NULL transfer function

Communication Macro
Part 3-1.5.3
EP1 to 5 Status Registers
(EP1C to EP5C)</td><td>The following description should be added as the NULL transfer mode restriction.

In this series, NULL transfer may not start after DMA transfer, even in the NULL transfer mode. Use this mode under the setting of EP1C to EP5C:NULE = "0".

[Workaround]
To perform the NULL transfer, firstly set DMAE = "0" and clear the DRQ bit without writing the buffer data.
See Notes of [bit10] DRQ bit in "23-1.5.9 EP1 to 5 Status Registers (EP1S to EP5S)".</td></tr>
<tr><td>Communication Macro
Part 3-1.5.3
EP1 to EP5 Control Register
(EP1C to EP5C)</td><td>[bit 14:13] TYPE: The following end-point transfer types are supported.
<table><tr><th>TYPE</th><th>Operation mode</th></tr><tr><td>00</td><td>Setting is prohibited</td></tr><tr><td>01</td><td>Setting is prohibited</td></tr><tr><td>10</td><td>Bulk transfer</td></tr><tr><td>11</td><td>Interrupt transfer</td></tr></table></td></tr>
<tr><td>Communication Macro
Part 3-1.5.10
EP0 to EP5 Data Registers
(EP0DTH to EP5DTH/
EP0DTL to EP5DTL)</td><td>Following restrictions should be added to "5.10. EP0 to EP5 Data Registers".

In this series, an indefinite data is read if serial read access to the above register is performed on the AHB bus.

[Workaround]
Please make the software to prevent the serial read. In the programming using C language, unintended serial read access on AHB bus may occur because of the optimization by the compiler option etc. Please refer to "■ Reference 1" for the workaround.</td></tr>
</table>

2. List of Limitations for TYPE1 Products

This section shows the differences in the MB9A002 Series, MB9A310 Series, MB9A110 Series, in a table.

The "Items" in the table are as written in this manual.

Item	Details
Communication Macro Part 1-2.7.9 1-3.5.9 1-4.6.9 1-5.5.12 FIFO Byte Register (FBYTE)	Following notes should be added to "7.9. FIFO Byte Register (FBYTE)" in chapter 1-2, "5.9. FIFO Byte Register (FBYTE)" in chapter 1-3, "6.9. FIFO Byte Register (FBYTE)" in chapter 1-4, "5.12. FIFO Byte Register (FBYTE)" in chapter 1-5. · If all the following conditions are met, the receive data full flag (SSR:RDRF) is not set to "1" despite the valid data of number of FBYTE settings in the receive FIFO. If the setting value of FBYTE is "2" or more, this operation is not applied. · The setting value of FBYTE is "1". · Both the number of valid data of receive FIFO and the number of FBYTE settings are "1" · The data in receive FIFO is read at the same time when the multi-function serial interface macro receives the data and the received data is written to receive FIFO. However, in case that one of the followings occurs later, the receive data full flag (SSR:RDRF) is set to "1". · Next data is received. · The receive time idle of 8-bit time or more is detected when the receive FIFO idle is enabled (FCR:FRIIE=1).

■ Reference 1

Example: If the following C source codes are compiled, serial read access may occur because of the optimization by the compiler option etc.

```
void do_ep0o(void)
{
        int i;
        int length;
        unsigned int b0,b1,b2,b3;

        b0 = (unsigned int)IO_EP0DT;
        b1 = (unsigned int)IO_EP0DT;
        b2 = (unsigned int)IO_EP0DT;
        b3 = (unsigned int)IO_EP0DT;
        buffer[0] = (unsigned short)b0;
        buffer[1] = (unsigned short)b1;
        buffer[2] = (unsigned short)b2;
        buffer[3] = (unsigned short)b3;
}
```

The following is a workaround. (Execute processing in the following order)

```
void do_ep0o(void)
{
        int i;
        int length;
        volatile int b0;

        b0 = (unsigned int)IO_EP0DT;
        buffer[0] = (unsigned short)b0;
        b0 = (unsigned int)IO_EP0DT;
        buffer[1] = (unsigned short)b0;
        b0 = (unsigned int)IO_EP0DT;
        buffer[2] = (unsigned short)b0;
        b0 = (unsigned int)IO_EP0DT;
        buffer[3] = (unsigned short)b0;
}
```

D. Product TYPE List

This section describes the product TYPE.

1. Product TYPE List

1. Product TYPE List

In this manual, the products are classified into the following groups and are described as follows.
For the descriptions such as "TYPE0", see the relevant items of the target product in the list below.

Table 1 TYPE0 product list

Description in this manual	Flash memory size			
	512 Kbytes	384 Kbytes	256 Kbytes	128 Kbytes
TYPE0	MB9BF506N MB9BF506R MB9BF506NA MB9BF506RA MB9BF506NB MB9BF506RB	MB9BF505N MB9BF505R MB9BF505NA MB9BF505RA MB9BF505NB MB9BF505RB	MB9BF504N MB9BF504R MB9BF504NA MB9BF504RA MB9BF504NB MB9BF504RB	-
	MB9BF406N MB9BF406R MB9BF406NA MB9BF406RA	MB9BF405N MB9BF405R MB9BF405NA MB9BF405RA	MB9BF404N MB9BF404R MB9BF404NA MB9BF404RA	-
	MB9BF306N MB9BF306R MB9BF306NA MB9BF306RA MB9BF306NB MB9BF306RB	MB9BF305N MB9BF305R MB9BF305NA MB9BF305RA MB9BF305NB MB9BF305RB	MB9BF304N MB9BF304R MB9BF304NA MB9BF304RA MB9BF304NB MB9BF304RB	-
	MB9BF106N MB9BF106R MB9BF106NA MB9BF106RA	MB9BF105N MB9BF105R MB9BF105NA MB9BF105RA	MB9BF104N MB9BF104R MB9BF104NA MB9BF104RA	MB9BF102N MB9BF102R MB9BF102NA MB9BF102RA
	-	MB9AF105N MB9AF105R MB9AF105NA MB9AF105RA	MB9AF104N MB9AF104R MB9AF104NA MB9AF104RA	MB9AF102N MB9AF102R MB9AF102NA MB9AF102RA

Table 2 TYPE1 product list

Description in this manual	Flash memory size				
	512 Kbytes	384 Kbytes	256 Kbytes	128 Kbytes	64 Kbytes
TYPE1	MB9AF316M MB9AF316N MB9AF316MA MB9AF316NA	MB9AF315M MB9AF315N MB9AF315MA MB9AF315NA	MB9AF314L MB9AF314M MB9AF314N MB9AF314LA MB9AF314MA MB9AF314NA	MB9AF312L MB9AF312M MB9AF312N MB9AF312LA MB9AF312MA MB9AF312NA	MB9AF311L MB9AF311M MB9AF311N MB9AF311LA MB9AF311MA MB9AF311NA
	MB9AF116M MB9AF116N MB9AF116MA MB9AF116NA	MB9AF115M MB9AF115N MB9AF115MA MB9AF115NA	MB9AF114L MB9AF114M MB9AF114N MB9AF114LA MB9AF114MA MB9AF114NA	MB9AF112L MB9AF112M MB9AF112N MB9AF112LA MB9AF112MA MB9AF112NA	MB9AF111L MB9AF111M MB9AF111N MB9AF111LA MB9AF111MA MB9AF111NA

Table 3 TYPE2 product list

Description in this manual	Flash memory size		
	1 Mbyte	768 Kbytes	512 Kbytes
TYPE2	MB9BFD18S MB9BFD18T	MB9BFD17S MB9BFD17T	MB9BFD16S MB9BFD16T
	MB9BF618S MB9BF618T	MB9BF617S MB9BF617T	MB9BF616S MB9BF616T
	MB9BF518S MB9BF518T	MB9BF517S MB9BF517T	MB9BF516S MB9BF516T
	MB9BF418S MB9BF418T	MB9BF417S MB9BF417T	MB9BF416S MB9BF416T
	MB9BF318S MB9BF318T	MB9BF317S MB9BF317T	MB9BF316S MB9BF316T
	MB9BF218S MB9BF218T	MB9BF217S MB9BF217T	MB9BF216S MB9BF216T
	MB9BF118S MB9BF118T	MB9BF117S MB9BF117T	MB9BF116S MB9BF116T

Table 4 TYPE3 product list

Description in this manual	Flash memory size	
	128 Kbytes	64 Kbytes
TYPE3	MB9AF132K MB9AF132L	MB9AF131K MB9AF131L
	MB9AF132KA MB9AF132LA	MB9AF131KA MB9AF131LA
	MB9AF132KB MB9AF132LB	MB9AF131KB MB9AF131LB

Table 5 TYPE4 product list

Description in this manual	Flash memory size			
	512 Kbytes	384 Kbytes	256 Kbytes	128 Kbytes
TYPE4	MB9BF516N MB9BF516R	MB9BF515N MB9BF515R	MB9BF514N MB9BF514R	MB9BF512N MB9BF512R
	MB9BF416N MB9BF416R	MB9BF415N MB9BF415R	MB9BF414N MB9BF414R	MB9BF412N MB9BF412R
	MB9BF316N MB9BF316R	MB9BF315N MB9BF315R	MB9BF314N MB9BF314R	MB9BF312N MB9BF312R
	MB9BF116N MB9BF116R	MB9BF115N MB9BF115R	MB9BF114N MB9BF114R	MB9BF112N MB9BF112R

Table 6 TYPE5 product list

Description in this manual	Flash memory size	
	128 Kbytes	64 Kbytes
TYPE5	MB9AF312K	MB9AF311K
	MB9AF112K	MB9AF111K

Table 7 TYPE6 product list

Description in this manual	Flash memory size		
	256 Kbytes	128 Kbytes	64 Kbytes
TYPE6	MB9AFB44L MB9AFB44M MB9AFB44N MB9AFB44LA MB9AFB44MA MB9AFB44NA MB9AFB44LB MB9AFB44MB MB9AFB44NB	MB9AFB42L MB9AFB42M MB9AFB42N MB9AFB42LA MB9AFB42MA MB9AFB42NA MB9AFB42LB MB9AFB42MB MB9AFB42NB	MB9AFB41L MB9AFB41M MB9AFB41N MB9AFB41LA MB9AFB41MA MB9AFB41NA MB9AFB41LB MB9AFB41MB MB9AFB41NB
	MB9AFA44L MB9AFA44M MB9AFA44N MB9AFA44LA MB9AFA44MA MB9AFA44NA MB9AFA44LB MB9AFA44MB MB9AFA44NB	MB9AFA42L MB9AFA42M MB9AFA42N MB9AFA42LA MB9AFA42MA MB9AFA42NA MB9AFA42LB MB9AFA42MB MB9AFA42NB	MB9AFA41L MB9AFA41M MB9AFA41N MB9AFA41LA MB9AFA41MA MB9AFA41NA MB9AFA41LB MB9AFA41MB MB9AFA41NB
	MB9AF344L MB9AF344M MB9AF344N MB9AF344LA MB9AF344MA MB9AF344NA MB9AF344LB MB9AF344MB MB9AF344NB	MB9AF342L MB9AF342M MB9AF342N MB9AF342LA MB9AF342MA MB9AF342NA MB9AF342LB MB9AF342MB MB9AF342NB	MB9AF341L MB9AF341M MB9AF341N MB9AF341LA MB9AF341MA MB9AF341NA MB9AF341LB MB9AF341MB MB9AF341NB
	MB9AF144L MB9AF144M MB9AF144N MB9AF144LA MB9AF144MA MB9AF144NA MB9AF144LB MB9AF144MB MB9AF144NB	MB9AF142L MB9AF142M MB9AF142N MB9AF142LA MB9AF142MA MB9AF142NA MB9AF142LB MB9AF142MB MB9AF142NB	MB9AF141L MB9AF141M MB9AF141N MB9AF141LA MB9AF141MA MB9AF141NA MB9AF141LB MB9AF141MB MB9AF141NB

Table 8 TYPE7 product list

Description in this manual	Flash memory size	
	128 Kbytes	64 Kbytes
TYPE7	MB9AFA32L MB9AFA32M MB9AFA32N	MB9AFA31L MB9AFA31M MB9AFA31N
	MB9AF132M MB9AF132N	MB9AF131M MB9AF131N
	MB9AFAA2L MB9AFAA2M MB9AFAA2N	MB9AFAA1L MB9AFAA1M MB9AFAA1N
	MB9AF1A2L MB9AF1A2M MB9AF1A2N	MB9AF1A1L MB9AF1A1M MB9AF1A1N

Table 9 TYPE8 product list

Description in this manual	Flash memory size		
	512 Kbytes	384 Kbytes	256 Kbytes
TYPE8	MB9AF156M MB9AF156N MB9AF156R MB9AF156MA MB9AF156NA MB9AF156RA MB9AF156MB MB9AF156NB MB9AF156RB	MB9AF155M MB9AF155N MB9AF155R MB9AF155MA MB9AF155NA MB9AF155RA MB9AF155MB MB9AF155NB MB9AF155RB	MB9AF154M MB9AF154N MB9AF154R MB9AF154MA MB9AF154NA MB9AF154RA MB9AF154MB MB9AF154NB MB9AF154RB

Table 10 TYPE9 product list

Description in this manual	Flash memory size		
	256 Kbytes	128 Kbytes	64 Kbytes
TYPE9	MB9BF524K MB9BF524L MB9BF524M	MB9BF522K MB9BF522L MB9BF522M	MB9BF521K MB9BF521L MB9BF521M
	MB9BF324K MB9BF324L MB9BF324M	MB9BF322K MB9BF322L MB9BF322M	MB9BF321K MB9BF321L MB9BF321M
	MB9BF124K MB9BF124L MB9BF124M	MB9BF122K MB9BF122L MB9BF122M	MB9BF121K MB9BF121L MB9BF121M

Table 11 TYPE10 product list

Description in this manual	Flash memory size
	64 Kbytes
TYPE10	MB9BF121J

Table 12 TYPE11 product list

Description in this manual	Flash memory size
	64 Kbytes
TYPE11	MB9AF421K MB9AF421L
	MB9AF121K MB9AF121L

Table 13 TYPE12 product list

Description in	Flash memory size

this manual	1.5 Mbytes	1 Mbytes
TYPE12	MB9BF529S MB9BF529T MB9BF529SA MB9BF529TA	MB9BF528S MB9BF528T MB9BF528SA MB9BF528TA
	MB9BF429S MB9BF429T MB9BF429SA MB9BF429TA	MB9BF428S MB9BF428T MB9BF428SA MB9BF428TA
	MB9BF329S MB9BF329T MB9BF329SA MB9BF329TA	MB9BF328S MB9BF328T MB9BF328SA MB9BF328TA
	MB9BF129S MB9BF129T MB9BF129SA MB9BF129TA	MB9BF128S MB9BF128T MB9BF128SA MB9BF128TA

E. Major Changes

This section describes the major changes.

1. Major Changes

1. Major Changes

Spansion Publication Number: MN706-00002

Page	Section	Change Results
Revision 1.0		
-	-	Initial release
Revision 2.0		
v	How to Use This Manual	Added an explanation about the product classification (TYPE).
3	CHAPTER 1: System Overview	1. Bus Architecture · Added the explanation to "●Priority Level". · Added "●Endian".
9, 10		3. Cortex-M3 Architecture · Added "*" (note).
11, 12		4. Mode · Added a table of the products other than TYPE0 in "□ How to Set Operating Mode". · Added "■About MD1 pin".
19	CHAPTER 2-1: Clock	3.2. Internal bus clock frequency division control · Added a column for "TYPE" in Table 3-1.
21, 22		3.3. PLL clock control · Corrected "■Setting the multiplication ratio to generate the PLL clock". (Added the explanations of TYPE0 and TYPE1 products separately.)
36		5.7. Software Watchdog Clock Prescaler Register (SWC_PSR) · Added "*" (note) to [bit7].
42, 43		5.12. PLL Control Register 2 (PLL_CTL2) · Added the explanations of TYPE0 and TYPE1 products separately.
49		6. Clock Generation Unit Usage Precautions · Corrected the description of "・Correlation between the clock mode switching and the oscillation stable bit". (When switching from the high-speed CR run, main run, or main PLL run ... □ When switching from the high-speed CR run, main run, or PLL run ...)
56	CHAPTER 2-2: High-Speed CR Trimming	4. High-Speed CR Trimming Function Setup Procedure Example · Corrected "■How to calculate the frequency trimming data". (Corrected the calculation value of TYPE0 products. Added TYPE1 products.)
60, 61		· Corrected "■Xtrm calculation procedure example". (Added "_coarse" and "_fine" as the variable number for TYPE0 products. Added TYPE1 products.)
65, 66		5.2. High-speed CR oscillation Frequency Trimming Register (MCR_FTRM) · Added the explanations of TYPE0 and TYPE1 products separately.

Page	Section	Change Results
68		6. High-Speed CR Trimming Function Usage Precautions · Corrected the misdescription in "□ About data stored in the "CR trimming" area".
120	CHAPTER 5: Low Power Consumption Mode	3.2. Operations of TIMER modes (high speed CR timer, main timer, PLL timer, low speed CR timer, and sub timer modes) · Added the explanation to <Notes>.
123		3.3. Operations of STOP mode · Added the explanation to <Notes>.
127		5.1. Standby Mode Control Register (STB_CTL) · Corrected [bit2].
-	CHAPTER 6: Interrupts	The following registers are added. · USB Odd Packet Size DMA Enable Register (ODDPKS)
199	CHAPTER 8: DMAC	3.4. Hardware-Block Transfer & Burst Transfer · Corrected Figure 3-4.
-	CHAPTER 9: I/O PORT	The following registers are added. · Port function setting register E (PFRE) · Pull-up setting register E (PCRE) · Port input/output direction setting register E (DDRE) · Port input data register E (PDIRE) · Port output data register E (PDORE) · Extended pin function setting register 11 (EPFR11)
246		2. Configuration, Block Diagram, and Operation · Added a row for "Special input" in Table 2-4.
251		4.2. Pull-up Setting Register (PCRx) · Added the explanation to <Notes>.
256		4.7. Extended Pin Function Setting Register (EPFRx) · Added <Note>.
257 to 259		4.8. Extended Pin Function Setting Register 00 (EPFR00) · The following correction is made due to the differences among TYPE0 and the other products. (Corrected the description of bit2 and bit1. Added <Note>.)
260 to 264		4.9. Extended Pin Function Setting Register 01 (EPFR01) · The following correction is made due to the differences among TYPE0 and the other products. (Corrected the description of bit31 to 18. Added <Note>.)
265		4.10. Extended Pin Function Setting Register 02 (EPFR02) · Corrected the misdescription in "■Register Configuration". (RTO13 □ RTO13E)
294 to 300		4.17. Extended Pin Function Setting Register 10 (EPFR10) · The following correction is made due to the differences among TYPE0 and the other products. (bit2 TESTB □ UECLKE, Added <Notes>.)

Page	Section	Change Results
307, 308		4.19. Special Port Setting Register (SPSR) · The following correction is made due to the differences among TYPE0 and the other products. (bit2 Reserved □ MAINXC, Corrected <Notes>.)
319	CHAPTER 10: Clock supervisor	5. Operation Examples · Corrected the misdescription in Figure 5-3.
-	CHAPTER 23: External Bus Interface	Changed the description as a whole due to the following items. · Multiplex function and clock synchronization function added. · The explanation of TYPE0 products and that of the other products added separately. · Document configuration and explanations in figures modified.
-	APPENDIXES 1.Register Map	Added the explanations of TYPE0 and TYPE1 products separately.
1357		How to read the each table · Added the explanation to <Notes>.
1358		FLASH_IF · Added * (0x014). · Added <Note>.
1359		Clock/Reset · Added DSPS_CTL(0x058).
1363		MFT · Corrected "Base_Address + Address". (0x0C4 - 0xFFF → 0x0C4 - 0x0FF)
1366		IO Selector for ch0-ch3, IO Selector for ch4-ch7 · Corrected "Base_Address + Address". (0x004-0xFFF → 0x004 - 0x0FF) Software-based Simulation Starup(Base Timer) · Corrected "Base Addrsee". (0x4002_5400 → 0x4002_5F00) · Corrected "Base_Address + Address". (0x000-0xBFB → 0x000 - 0x0FB, 0xBFC → 0x0FC)
1370		CR Trim · Corrected "Base_Address + Address". (0x010 - 0xFFF → 0x010 - 0x0FF)
1371		EXTI · Corrected "Base_Address + Address". (0x00.. → 0x0.., 0x020 - 0xFFF → 0x020 - 0x0FF)
1372		INT-Req. READ · Added ODDPKS(0x008).
1375 to 1377		GPIO · Added PFRE(0x038), PCRE(0x0138), DDRE(0x238), PDIRE(0x338), PDORE(0x438) and EPFR11(0x62C).

Page	Section	Change Results
1379		USB Clock · Added UPCR5(0x024). · Corrected "Base_Address + Address". (0x034 - 0xFFF □ 0x034 - 0x0FF)
1380		MFS ch4～ch7 · Corrected "Base_Address + Address". (0x00.. → 0x0..)
1381	APPENDIXES 1.Register Map	CRC · Corrected "Base_Address + Address". (0x00.. → 0x0..) · Deleted 0x010 - 0xFFF.
1383		EXT-Bus I/F · Added ATIM0 to ATIM7(0x0060 to 0x007C) and DCLKR(0x0300).
1385	APPENDIXES 1.Register Map	USB ch0 · Corrected "Base_Address + Address". (0x2178 - 0xFFFF → 0x2178 - 0x217F)
1387		DMAC · Corrected "Base_Address + Address". (0x0090 - 0xFFFF → 0x0090 - 0x00FF) CAN · Deleted 0x0000 to 0x0034 and 0x0080 to 0x0FFF.
-	APPENDIXES 2.List of Limitations	Added a new section.
Revision 3.0		
-	-	The tables of TYPE2 and TYPE3 products are added.
2	CHAPTER 1: System Overview 1. Bus Architecture	Ethernet bus master is added. Terms are corrected. CodeRAM → SRAM0 On Chip SRAM → SRAM1
4	1.1. Bus Block Diagram Figure 1-1 Bus Block Diagram	Bus Block Diagram is corrected.
5	2. Memory Architecture	Terms are corrected. CodeRAM → SRAM0 On Chip SRAM → SRAM1
6	2.1. Memory Map Figure 2-1 Memory Map	Memory Map is corrected.
7, 8	2.2. Peripheral Address Map Table 1-1 Peripheral Address Map	Peripheral Address Map is corrected.
15	CHAPTER 2-1: Clock	The information of the high-speed CR clock is added.
15, 16	CHAPTER 2-1: Clock 2. Clock Generation Unit Configuration/Block Diagram	Terms are corrected. Stop mode → RTC mode Stop mode, deep standby RTC mode, and deep standby stop mode are added.

Page	Section	Change Results
24	3. Clock Generation Unit Operations 3.4. Oscillation stabilization wait time ■Cause of waiting for oscillation stability	"When returning to watch counter interrupt, RTC interrupt, and external interrupt from RTC mode" is added.
31	5. Clock Generation Unit Register List 5.1. System Clock Mode Control Register (SCM_CTL)	Notes for RTCE bit are added.
33	5.2. System Clock Mode Status Register (SCM_STR)	Notes for RTCE bit are added.
51	6. Clock Generation Unit Usage Precautions	RTC is added to "Peripherals independent of clock control by the clock generation unit".
58	CHAPTER 2-2: High-Speed CR Trimming	The descriptions of TYPE2 and TYPE3 products are added.
73 to 90	CHAPTER 3: Resets	The descriptions of TYPE3 products are added. Deep standby transition reset is added. "Reserved" of Reset Cause Register bit3 is corrected to "LVDH".
77 to 80	3. Explanation of Operations 3.1. Reset Causes	Registers which are not initialized are corrected.
78	3.1. Reset Causes ■Low-voltage Detection Reset, External Voltage Monitoring (LVDH)	The description of the LVD reset is divided depending on the product type; TYPE3 and the others.
80	3.1. Reset Causes ■Deep standby transition reset (DSTR)	The description of "■Deep standby transition reset (DSTR)" is added.
84	3.3. Reset Sequence ■State Transition Diagram for Resets	Deep standby transition reset in the State Transition Diagram for Resets is corrected.
88 to 90	4. Registers 4.1. Reset Cause Register (RST_STR: ReSeT Status Register)	The description of the reset cause register is divided depending on the product type; TYPE3 and the others.
91, 92	CHAPTER 4-1: Low-voltage Detection Configuration	CHAPTER 4-1: Low-voltage Detection Configuration is added.
109, 125	CHAPTER 4-3: Low-voltage Detection (TYPE3 Products)	CHAPTER 4-3: Low-voltage Detection (TYPE3 Products) is added.
127 to 178	CHAPTER 5: Low Power Consumption Mode	RTC mode, Deep Standby RTC mode and Deep Standby STOP mode are added.
		Description is corrected so that watch counter is turned off in deep standby mode.

Page	Section	Change Results
		A term is corrected. hold → retain clock failure detection reset → clock supervisor reset
134 to 139	2. Configuration of CPU Operation Modes	WKUP pin input/interrupt is corrected to Deep standby return cause.
146	3.2 Operations of TIMER modes (high speed CR timer, main timer, PLL timer, low speed CR timer, and sub timer modes) ■TIMER mode setting procedure" is changed	Descriptions of "■TIMER mode setting procedure" is changed.
161, 162	5. Description of Deep Standby Mode Operation	A list of functions initialized or turned off in deep standby mode is added.
169	7. Deep Standby Return Cause Determination Procedure	"7. Deep Standby Return Cause Determination Procedure" is added.
170	8. List of Low Power Consumption Registers	A note that registers of the deep standby control block are not turned off in deep standby mode is added.
179, 180	CHAPTER 6-1: Configuration of interrupts	CHAPTER 6-1: Configuration of interrupts is added.
181 to 238	CHAPTER 6-2: Interrupts	Descriptions of the interrupts are added.
		Terms are corrected. RTC0 → RTC DREQSEL1 is moved closer to DREQSEL0. Terms not related to MFS are deleted. The descriptions of RTC1 are deleted. The details of DQESEL are added to the block diagram. The contents of DREQSEL register are corrected.
		The block diagram is corrected. The description of DQESEL is corrected. ODDPKS1 (USB.ch1 DMA transfer control) is added.
215	CHAPTER 6-2: Interrupts 4.17 IRQ28 Batch Read Register (IRQ28MON)	"Bit no." is corrected in the table of FRT2INT
239 to 265	CHAPTER 6-3: Interrupts (TYPE3 Products)	CHAPTER 6-3: Interrupts (TYPE3 Products) is added.
288 to 291	CHAPTER 8 DMAC 2. Configuration of DMAC	Figure 2-1 is corrected. ・ Connection of the hardware transfer request signal is corrected. Table 2-1 is modified and Table 2-2 is added.
317	CHAPTER 8 DMAC 4.3 DMAC Operation and Control Procedure for Hardware (EM=0) Transfer	The following sentence is added below "Figure 4-11 Operation of Demand Transfer in Disable State". Also, the transfer request signal is not cleared from DMAC.

Page	Section	Change Results
319	CHAPTER 8 DMAC 4.4 DMAC Operation and Control Procedure for Hardware (EM=1) Transfer	The description below "Figure 4-13 Transitional Diagram of Hardware (EM=1) Transfer State" is corrected as follows. the channel to be controlled for hardware (EM=0) transfer → the channel to be controlled for hardware (EM=1) transfer.
336	CHAPTER 8 DMAC 6. Notes	Notes are added.
337 to 442	CHAPTER 9: I/O PORT	9 to F are added, such as PFR, DDR, PDIR, PDOR, etc. EPFR3 and 12 to 15 are added. PZR0 to F are added.
		The description of PZR register is corrected. Bit 0bxx is corrected to xx.
		"This register is not initialized by deep standby transition reset." is added (EPFRxx, SPSR and PZRx).
339	2. Configuration, Block Diagram, and Operation	Deep standby transition reset is added.
343		X0 and X1 are added to Table 2-3.
345		Ethernet and some other items are added to Table 2-4.
346	2. Configuration, Block Diagram, and Operation	■Operation in deep standby mode is added.
363	4. Register List 4.7. Extended Pin Function Setting Register (EPFRx)	"EPFR02, EPFR03, and EPFR10 to 15 do not exist in TYPE3 products." is added to Note.
382	4.12. Extended Pin Function Setting Register 04 (EPFR04)	The initial value for TIOB0S of EPFR04 bit6-4 is corrected. 00 → 000
384		■Register Configuration is corrected. bit5:4 → bit6:4 Same as Writing 00. → Same as Writing 000.
435	4.23. Extended Pin Function Setting Register 15 (EPFR15)	Notes for TYPE3 are added.
448	CHAPTER 10: Clock supervisor 4. Setup Procedure Examples	The procedure in "■Example of clock failure detection setup procedure is corrected" as follows. Clock failure detection function enables → Clock failure detection operation of main and sub clocks starts
449		The title of procedure is corrected as follows. "■Example of frequency detection setup procedure" → "■Example of Anomalous frequency detection setup procedure"
452	CHAPTER 10: Clock supervisor 5. Operation Examples ・ Example calculation	The explanation of the Count value B is corrected as follows. within the range 975 to 1078. → within the range 975 to 1078 including the high-speed CR error.
461	CHAPTER 10: Clock supervisor 7. Usage Precautions	The title of the precaution is corrected as follows. The order of the frequency detection settings before using → The order of the anomalous frequency detection settings before using

Page	Section	Change Results
1552, 1554	CHAPTER 25: CRC (Cyclic Redundancy Check) 2. CRC Operations 2.2. CRC use examples	Figure 2-3 and Figure 2-5 are corrected.
1567	CHAPTER 26: External Bus Interface 2. Block Diagram	Figure 2-2 and its notes are added.
1611	CHAPTER 26: External Bus Interface Usage Precautions	The item in "Table 7-2 Target Device and Functions Setups" is corrected as follows. TYPE1 → Except TYPE0
1621	CHAPTER 28: Flash Memory	CHAPTER 28: Flash Memory is added.
1624 to 1674	APPENDIXES A. Register Map	Corrected for TYPE2/3 products.
1626	APPENDIXES A. Register Map	The description of FBFCR register is added.
1641		The register name at 0x000 (Register for IO Selector for ch.8-ch.11(Base Timer) is corrected as follows. BTSEL4567 → BTSEL89AB
		The register name at 0x000 (IO Selector for ch.12-ch.15(Base Timer) is corrected as follows. BTSEL4567 → BTSELCDEF
1656		The register name at 0x43C is corrected as follows. PDOR8 → PDORF
1673		The register map from the address of 0x0080 to 0x0FFC (Registers for CAN ch.0 and ch.1) is added.
1676, 1677	APPENDIXES B List of Notes	"B List of Notes" is added.
1678 to 1680	APPENDIXES C. List of Limitations for MB9A100A Series, MB9B500A/B400A/B300A/100A Series, MB9A100 Series, MB9B500/400/300/100 Series	The descriptions of MB9A100A Series, MB9B500A/B400A/B300A/100A Series are added. Limitations for USB function are added. Limitations in NULL transfer mode are added.
1682 to 1684	APPENDIXES D. Product TYPE List	Product TYPE List is added.
Revision 4.0		
-	-	The tables of TYPE4 and TYPE5 products were added.
1 to 9	CHAPTER 1: System Overview	The descriptions of MainFlash and WorkFlash were added.
96 to 109	CHAPTER 4-2: Low-voltage Detection	The descriptions of Deep standby modes were added.
123	5.1. Low-voltage Detection Voltage Control Register (LVD_CTL)	A note was added.

Page	Section	Change Results
124	5.2. Low-voltage Detection Interrupt Register (LVD_STR)	A note was added.
131	CHAPTER 5: Low Power Consumption Mode 1. Overview of Low Power Consumption Mode ■Table of low power consumption modes equipped in each TYPE	The descriptions about the on-chip SRAM retention were added in the table.
135	1. Overview of Low Power Consumption Mode ■Overview of deep standby stop mode	The description about the on-chip SRAM retention was added.
144, 145	3. Operations of Standby Modes	The explanations of the Main clock in PLL sleep mode in "Table 3-1" and "3-2" were revised.
148	3.1. Operations of SLEEP modes (high speed CR sleep, main sleep, PLL sleep, low speed CR sleep, and sub sleep modes) ●Return by interrupt	The bit name was corrected as follows. the RCM bit of SCM_CTL → the RCS bit of SCM_CTL register
151	3.2. Operations of TIMER modes (high speed CR timer, main timer, PLL timer, low speed CR timer, and sub timer modes) ●Return by interrupt	The bit name was corrected as follows. the RCM bit of SCM_CTL → the RCS bit of SCM_CTL register
153	3.3. Operation of RTC Mode ●Return by interrupt	The bit name was corrected as follows. the RCM bit of SCM_CTL → the RCS bit of SCM_CTL register
156	3.4. Operations of STOP mode ●Return by interrupt	The bit name was corrected as follows. the RCM bit of SCM_CTL → the RCS bit of SCM_CTL register
165	5. Description of Deep Standby Mode Operation ■Internal power supply status and reset status in deep standby mode	The notes below "Table 5-3" were revised.
166	5.1. Operation of Deep Standby RTC Mode ●CPU and on-chip memory	The description about the on-chip SRAM retention was added.

Page	Section	Change Results
168	5.2. Operation of Deep Standby Stop Mode ●CPU and on-chip memory	The description about the on-chip SRAM retention was added.
169	5.2. Operation of Deep Standby Stop Mode ●Return from deep standby STOP mode	The notes were revised.
173	8. List of Low Power Consumption Registers	The description of the Deep standby RAM retention register was added in the table
177	8.3. Deep Standby Return Cause Register 1 (WRFSR)	The notes were revised.
181	8.7. Deep Standby RAM Retention Register (DSRAMR)	The section "8.7. Deep Standby RAM Retention Register (DSRAMR)" was added.
182	8.8. Backup Registers from 01 to 16 (BUR01 to 16)	The note was revised.
184 to 186	CHAPTER 6-1: Configuration of interrupts	The information of the products with the interrupt vector relocate function was added.
		Table 1-2 Exceptions and Interrupt factor vectors list was added.
245 to 297	CHAPTER 6-3: Interrupts (When interrupt factor vector relocate is selected)	"CHAPTER 6-3: Interrupts (When interrupt factor vector relocate is selected)" was newly added.
349	CHAPTER 8 DMAC 2.1. DMAC and System Configuration ■Explanation of Block Diagram	The explanation of "DMAC" was revised from "8-ch." to "maximum 8- ch.
401	CHAPTER 9: I/O PORT 2. Configuration, Block Diagram, and Operation	The explanation of PZR in Table 2-1 was revised.
413	CHAPTER 9: I/O PORT 4.2. Pull-up Setting Register (PCRx) ■List of PCR Register Configuration	The description of PCR8 was deleted.
422	4.7. Extended Pin Function Setting Register (EPFRx)	The summary description was revised.
436	4.11. Extension Function Pin Setting Register 03 (EPFR03)	The summary description was revised.
443	4.12. Extended Pin Function Setting Register 04 (EPFR04)	The explanation of TIOB0S when writing 001was revised as follows. “Same as writing 00 → “Same as writing ‘000’”

Page	Section	Change Results
466	4.18. Extended Pin Function Setting Register 10 (EPFR10)	The summary description was revised.
472	4.18. Extended Pin Function Setting Register 10 (EPFR10)	Notes were revised.
473	4.19. Extended Pin Function Setting Register 11 (EPFR11)	The summary description was revised.
479	4.20. Extended Pin Function Setting Register 12 (EPFR12)	The summary description was revised.
483	4.21. Extended Pin Function Setting Register 13 (EPFR13)	The summary description was revised.
487	4.22. Extended Pin Function Setting Register 14 (EPFR14)	The table of bit29,28 was corrected.
491	4.23. Extended Pin Function Setting Register 15 (EPFR15)	The summary description was revised.
501	5. Usage Precautions	The pin name in Table 5-1 was revised as follows. SOUT → SOT
1679	CHAPTER 26: External Bus Interface 6.3. Area Register 0 to Area Register 7 (AREA0 to AREA7)	The explanation of [bit22:16] was revised.
1693	CHAPTER 27: Debug Interface 2.4 Internal Pull-Ups of JTAG Pins	The summary description was revised.
1699	APPENDIXES 1. Register Map	Notes in "How to read the each table" were added.
1716	1. Register Map QPRC	The initial value of QICRL register was corrected.
1719	1. Register Map CR Trim	The note number for MCR_FTRM register was revised.
1720	1. Register Map INT-Req. READ	The information of IRQCMODE register was added.
1723	1. Register Map INT-Req. READ	The information of RCINTSEL0 to RCINTSEL7 was added.
1727	1. Register Map GPIO	The description of PCR8 was deleted.
1734	1. Register Map DS_Mode	The information of DSRAMR register was added.
1748	1. Register Map WorkFlash_IF	The information of the registers for WorkFlash was added.

Page	Section	Change Results
1750	APPENDIXES B. List of Notes	"TYPE3" was deleted from the description of the Serial Write of Flash.
1757	APPENDIXES D. Product TYPE List	The table of TYPE 2 was revised. The information of TYPE4 and TYPE5 was added.
Revision 5.0		
-	-	TYPE6 and TYPE7 products are added.
6	CHAPTER 1: System Overview 1.3 Memory map	Figure 1-2. "Memory map" is revised.
7 to 9	1.4 Peripheral Address Map	Table 1-1. "Peripheral Address Map" is revised.
25	CH1APTER 2-1: Clock 3.3 PLL clock control	"■ Setting multiplication ratio to generate main PLL clock" In Table 3-4, the setting example for TYPE7 products is added. In Table 3-5, the setting example of TYPE6 products is added.
57	CHAPTER 2-2: High-Speed CR Trimming 2 High-Speed CR Trimming Function Configuration and Block Diagram	Figure 2-1 "Base Timer" is added.
		"● High-Speed CR Oscillator", "● High-Speed CR Trimming Control Circuit and Registers", and "●Multi-function timer input capture/base timer" in "■ Configuration" The explanation on Base timer is added.
60, 62, 63	4 High-Speed CR Trimming Function Setup Procedure Example	"■ How to calculate the frequency trimming data" The explanation on TYPE6 products is added.
64, 65		"■Example of trimming data acquisition using base timer" is added.
66		"■Frequency trimming procedure example" is revised. Figure 4-6 is revised.
69		"■Xtrm calculation procedure example (TYPE6 products)" is added.
75,77	5.2 High-speed CR Oscillation Frequency Trimming Register (MCR_FTRM)	The MCR_FTRM register initial values of TYPE3 and TYPE7 products are revised. The explanation on TYPE6 products is added.
101 to 118	CHAPTER 4: Resets	Product TYPE added.
108	3.1 Reset Cause	"■ Deep Standby Transition Reset (DSTR)" For functions and registers not initialized by Deep Standby Transition Reset, "HDMI-CEC/Remote Control Reception" is added.
120	CHAPTER 5-1: Low-Voltage Detection Configuration 1 Configuration	The explanation of the referred chapter is deleted, and "■Reference chapter of the Low-voltage detection" is added.
121	CHAPTER 5-2: Low-Voltage Detection (A)	The Chapter title is revised. Low-voltage Detection → Low-voltage Detection (A)
137	CHAPTER 5-3: Low-Voltage Detection (B)	The Chapter title is revised. Low-voltage detection (TYPE3 product) → Low-voltage Detection (B)

Page	Section	Change Results
138	1 Overview	"● Operation of Low-voltage Reset Circuit" and "●Operation of Low-voltage Interrupt Circuit" The explanation is revised. in standby modes → in standby modes and Deep standby modes
141	3 Explanation of Operation	"●Explanation of Circuit Operation" The explanation is revised.
141	3 Explanation of Operation	The explanation is revised as follows. This circuit is available in the standby modes (Sleep mode,Timer mode, RTC mode, STOP mode, deep standby RTC mode, and deep standby stop mode). → This circuit is available in the standby modes (SLEEP mode, TIMER mode, RTC mode, and STOP mode) and the deep standby modes (Deep standby RTC mode and Deep standby STOP mode).
147	5.1 Low-voltage Detection Voltage Control Register (LVD_CTL)	"5.1 Low-voltage Detection Voltage Control Register (LVD_CTL)" The explanation of the low voltage detecting voltage control register is revised. The initial value of LVDRE is revised.
149		< Notes > is revised. "bit15 to bit8 of this register are available only for the TYPE3 products" is deleted. Bit7 to bit0 of this register →this register
153	5.5. Low-voltage Detection Circuit Status Register (LVD_STR2)	[bit5:0] Reserved bits is revised. The read value is undefined → "0" is always set in read mode.
155 to 171	CHAPTER 5-4: Low Voltage Detection (C)	"CHAPTER 5-4: Low Voltage Detection (C)" is added.
175	CHAPTER 6: Low Power Consumption Mode 1. Overview of Low Power Consumption Mode	"■Table of low power consumption modes equipped in each TYPE" is revised. TYPE6 and TYPE7 products are added in Table 1-1. Table 1-2 is added.
207, 208	5. Description of Deep Standby Mode Operation	In Table 5-2 and Table 5-3, "HDMI-CEC/Remote Control Reception" is added.
209 to 211		"5.1 Operation of Deep Standby RTC Mode" is revised. "HDMI-CEC/Remote Control Reception" is added.
216	8. List of Low Power Consumption Mode Registers	"Sub Oscillation Circuit Power Supply Control Register (REG_CTL)","Sub Clock Control Register (RCK_CTL)" are added.
219	8.2 Sub Oscillation Circuit Power Supply Control Register (REG_CTL)	"8.2 Sub Oscillation Circuit Power Supply Control Register (REG_CTL)"is added.
220	8.3 Sub Clock Control Register (RCK_CTL)	"8.3 Sub Clock Control Register (RCK_CTL)" is added.
223	8.6 Deep Standby Return Factor Register 2 (WIFSR)	WCEC0I/WCEC1I, WUI5/WUI4 bits are added.
225	8.7 Deep Standby Return Enable Register (WIER)	WCEC0E/WCEC1E, WUI5E/WUI4E bits are added.
230	9. Usage Precautions	"9. Usage Precautions" is added.

Page	Section	Change Results
232	CHAPTER 7-1: Configuration of interrupts 1. Configuration	"■Reference chapter of the interrupt controller" is revised. TYPE6 and TYPE7 products are added in Table 1-1.
		"■Interrupt factor vector relocate function" is revised.
234		In Table 1-2, No.43, 52, 53, and 63 of the vectors are revised.
235	CHAPTER 7-2: Interrupts (A)	The Chapter title is revised. Interrupts → Interrupts (A)
239	3. Exception and Interrupt Factor Vectors	In Table 3-1, No.43, 52, 53, and 63 of the vectors are revised.
268	4.16. IRQ25/26 Batch Read Register (IRQxxMON)	The description of IRQ27/MON is deleted.
269	4.17. IRQ27 Batch Read Register (IRQ27MON)	"4.17. IRQ27 Batch Read Register (IRQ27MON)" is added.
283	4.26. IRQ36 Batch Read Register (IRQ36MON)	[bit5] RCEC0INT is added.
284	4.27. IRQ37 Batch Read Register (IRQ37MON)	[bit6] RCEC1INT is added.
288	4.30. IRQ47 Batch Read Register (IRQ47MON)	[bit11] FLASHINT is added. HNAG → HANG
295	CHAPTER 7-3: Interrupts (B)	The Chapter title is revised. Interrupts (The interrupt factor vector relocate is selected) → Interrupts (B)
299	3. Exception and Interrupt Factor Vectors	In Table 3-1, No.43, 52, 53, and 63 of the vectors are revised.
324	4.16. IRQ25/26 Batch Read Register (IRQxxMON)	The description of IRQ27/MON is deleted.
325	4.17. IRQ27 Batch Read Register (IRQ27MON)	"4.17. IRQ27 Batch Read Register (IRQ27MON)" is added.
335	4.24. IRQ36 Batch Read Register (IRQ36MON)	[bit5] RCEC0INT is added.
336	4.25. IRQ37 Batch Read Register (IRQ37MON)	[bit6] RCEC1INT is added.
341	4.29. IRQ47 Batch Read Register (IRQ47MON)	[bit11] FLASHINT is added. HNAG → HANG
349	CHAPTER 7-4: Interrupts (C)	The Chapter title is revised. Interrupts (TYPE3 product) → Interrupts (C)
353	3. Exception and Interrupt Factor Vectors	In Table 3-1, No.45, 46, and 47 of the vectors are revised.
373	4.17. IRQ29 Batch Read Register (IRQ29MON)	[bit4] LCDCINT is added.
374	4.18. IRQ30 Batch Read Register (IRQ30MON)	[bit5] RCEC0INT is added.
375	4.19. IRQ31 Batch Read Register (IRQ31MON)	[bit6] RCEC1INT is added.
448	CHAPTER 10: I/O Port 1. Overview	"・Special I/O port" is revised. 10-bit DA converter and LCD controller Ports are added.
449, 450	2. Configuration, Block Diagram, and Operation	Figure 2-1 is revised. Explanation and < Notes > are revised.

Page	Section	Change Results
490	4.12. Extended Pin Function Setting Register 04(EPFR04)	[bit6:4] TIOB0S setting is revised.
536	4.22. Extended Pin Function Setting Register 14(EPFR14)	CEC1B/CEC0B is added to [bit31:30].
544, 545	4.24. Special Port Setting Register (SPSR)	[bit3:2] MAINXC setting is added. [bit1:0] SUBXC setting is added.
615	CHAPTER 12: External Bus Interface 7. Usage Precautions	"●MCU Type and Function Setups" Table 7-2 is revised.
627 to 631	CHAPTER 15: Unique ID Register	CHAPTER 15: Unique ID Register is added.
648	APPENDIXES A. Register map PPG	IGBTC register is added.
654	10-bit D/AC	Register Map of 10-bit D/AC is added.
657, 658	INT-Req READ	"■ Products other than TYPE3/TYPE7 products" The initial values of IRQ27MON, IRQ36MON, and IRQ37MON are revised.
661	INT-Req READ	"■TYPE3/TYPE7 products" The initial values of IRQ29MON, IRQ30MON, and IRQ31MON are revised.
662	LCDC	Register Map of LCDC is added.
667	GPIO	The initial values of SPSR register are revised.
668		The initial values of EPFR14 register are revised.
670	HDMI-CEC/Remote Control Receiver	Register Map of "HDMI-CEC/Remote Control Receiver" is added.
672	DS_Mode	Address value of Base_Address is revised.
		REG_CTL and the RCK_CTL register are added.
		The initial values of WIFSR and WIER register are revised.
677, 678	RTC	Register Map is divided into the map for TYPE3/4/5 products and that for TYPE6/7 products.
692	C. List of Limitations 1. List of Limitations for TYPE0 Products	Notes on FBYTE setting values of MFS are added.
694	2. List of Limitations for TYPE1 products	"2. List of Limitations for TYPE1 products" is added.
697 to 699	D. Product TYPE List 1. Product TYPE List	The type is added in Table 1 and Table 4. The lists of TYPE6 and TYPE7 products are added (Table 7 and Table 8).
Revision 6.0		
-	-	In this manual, types of new target products added.
vi	-	In Table 2, Products of TYPE with A added.
viii	-	In Table 7, TYPE 6 products of TYPE with A added.
		Table 9, TYPE 8 Product List added.
ix	-	Table 10, TYPE 9 Product List added.
7	CHAPTER 1: System Overview	In Table 1-1, reference chapter describing Base Timer added.

Page	Section	Change Results
	1. Bus Architecture 1.4. Peripheral Address Map	
17	CHAPTER 2-1: Clock 2. Clock Generation Unit Configuration/Block Diagram	Notes on "■ Master Clock" added.
19	2. Clock Generation Unit Configuration/Block Diagram ■ Block Diagram	In Figure 2-1, explanatory notes added.
23 to 26	CHAPTER 2-1: Clock 3. Clock Generation Unit Operations ■ Setting the multiplication ratio to generate the main PLL clock	In Table 3-1 to Table 3-6, notes added.
58	CHAPTER 2-2: High-Speed CR Trimming 1. High-Speed CR Trimming Function Overview	In Table 1-1, TYPE8 and TYPE9 products added.
124	CHAPTER 5-1: Low-voltage Detection Configuration 1. Configuration	In Table 1-1, TYPE8 and TYPE9 products added.
169 to 171	CHAPTER 5-4: Low-voltage Detection (C) 5. Registers 5.1. Low-voltage Detection Voltage Control Register (LVD_CTL)	Settings for TYPE8 and TYPE9 products added.
179	CHAPTER 6: Low Power Consumption Mode 1. Overview of Low Power Consumption Mode ■ Table of low power consumption modes equipped in each TYPE	In Table 1-1 and Table 1-2, TYPE8 and TYPE9 products added.
236, 237 to 239	CHAPTER 7-1: Configuration of interrupts 1. Configuration	In Table 1-1 of "■ Reference chapter of the interrupt controller", TYPE 8 and TYPE 9 added. In Table 1-2 of "■ Interrupt factor vector relocate function", interrupt factor vectors added.
244, 245	CHAPTER 7-2:	In Table 3-1, interrupt factors added.

Page	Section	Change Results
	Interrupts (A) 3. Exception and Interrupt Factor Vectors	
269	CHAPTER 7-2: Interrupts (A) 4. Registers 4.12. IRQ07/09/11/13/15/17/19/21 Batch Read Register (IRQxxMON)	MFSINT bit added.
270, 271	CHAPTER 7-2: Interrupts (A) 4. Register 4.13. IRQ08/10/12/14/16/18/20/22 Batch Read Register (IRQxxMON)	MFSINT bit added.
304 to 306	CHAPTER 7-3: Interrupts (B) 3. Exceptions and Interrupt Factor Vectors	In Table 3-1, interrupt factors added.
318	CHAPTER 7-3: Interrupts (B) 4. Register 4.7. IRQ11/39/40 Batch Read Register (IRQxxMON)	MFSINT bit added.
331	4.16. IRQ25/26 Batch Read Register (IRQxxMON)	MFSINT bit added.
333	4.17. IRQ27 Batch Read Register (IRQ27MON)	MFSINT bit added.
340	4.20. IRQ32 Batch Read Register (IRQ32MON)	MFSINT bit added.
342	4.21. IRQ33 Batch Read Register (IRQ32MON)	MFSINT bit added.
473	CHAPTER 10: I/O Port 4. Register List	In Table 4-1, registers (EPFR16 to EPFR18) added.
555 to 558		Item 4.24. "Extended Pin Function Setting Register 16 (EPFR16) " added.
559 to 562		Item 4.25. "Extended Pin Function Setting Register 17 (EPFR17)" added.
563, 564		Item 4.26. "Extended Pin Function Setting Register 18 (EPFR18)" added.
657	APPENDIXES A. Register Map 1. Register Map	In <Notes>, *5 to *8 added.
658		In FLASH I/F Register Map, TYPE8 and TYPE9 products added.
659		Register map of Unique ID added.
675, 676		For target product TYPE of 12-bit A/D Converter, TYPE6, TYPE8, and TYPE9 products added.
694		Description of target product TYPE in LVD register map changed.
698, 699		Register map of MFS divided into the map for products other than TYPE8 product and that for TYPE8 product.

Page	Section	Change Results
703		For target products of RTC register map, TYPE8 and TYPE9 products added.
722	D. Product TYPE List 1. Product TYPE List	In Table 2, Products of TYPE with A added.
724		In Table 7, Products of TYPE with A added. Table 9 "TYPE8 Product list" added.
725		Table 10 "TYPE9 Product list" added.
Revision 7.0		
-		TYPE 10, TYPE 11 and TYPE 12 products added.
ix		In Table 11, TYPE 10 Product List added. In Table 12, TYPE 11 Product List added. In Table 13, TYPE 12 Product List added.
7	CHAPTER 1: System Overview 1.3 Memory Map	In Figure 1-2, notes added.
26	CHAPTER 2-1: Clock 3. Clock Generation Unit Operations 3.3. PLL clock control ■Setting the main PLL clock oscillation stabilization wait time	In Table 3-5, TYPE 11 product added.
27		In Table 3-6, TYPE 10 product added. Table 3-7 added.
58	CHAPTER 2-2: High-Speed CR Trimming 1. High-Speed CR Trimming Function Overview	Description of temperature trimming setup added. In Table 1-1, TYPE 10 to TYPE 12 products added.
59	2. High-Speed CR Trimming Function Configuration and Block Diagram	Figure 2-1 modified.
60	3. High-Speed CR Trimming Function Operation ■Operation of high-speed CR oscillation trimming function	"l Temperature trimming setup" added. Description of "l Register lock function" modified. Description of "l Trimming data acquisition" modified.
61,62	4. High-Speed CR Trimming Function Setup Procedure Example ■Trimming setup	Description modified as shown below. "l Trimming setup for products not supporting temperature adjustment" and "l Trimming setup for products supporting temperature adjustment" added.
69	4. High-Speed CR Trimming Function Setup Procedure Example ■Frequency trimming procedure example	Figure 4-7 modified.

Page	Section	Change Results
72	4. High-Speed CR Trimming Function Setup Procedure Example ■Xtrm calculation procedure example (TYPE6, TYPE8 to TYPE12 products)	For titles, TYPE 10 to TYPE 12 products added. In Figure 4-10, TYPE 10 to TYPE 12 products added.
73	4. High-Speed CR Trimming Function Setup Procedure Example ■Procedure example of using "CR trimming" area storage data inside flash memory	Figure 4-11 modified.
74	5. High-Speed CR Trimming Function Register List	In Table 5-1, registers added.
80	5.2. High-speed CR oscillation Frequency Trimming Register (MCR_FTRM)	For description, TYPE 10 to TYPE 12 products added.
81	5.3. High-Speed CR Oscillation Temperature Trimming Register (MCR_TTRM)	"5.3 High-Speed CR Oscillation Temperature Trimming Register (MCR_TTRM)" is added.
82	5.4. High-Speed CR Oscillation Register Write-Protect Register (MCR_RLR)	Description of registers modified.
83	6. High-Speed CR Trimming Function Usage Precautions	Notes for using temperature adjustment added.
126	CHAPTER 5-1: Low-voltage Detection Configuration 1. Configuration	In Table 1-1, TYPE 10 to TYPE 12 products added.
144	CHAPTER 5-3: Low-voltage Detection (B) 1. Overview ●Operations of Low-voltage Interrupt Circuit	Description added.
145	2. Configuration	Figure modified (LVDIM added to block diagram). In "l Low-voltage Detection Voltage Control Register (LVD_CTL), description added.

Page	Section	Change Results
147	3. Explanation of Operations ■Operations of Low-Voltage Detection Reset Circuit ●Explanation of Circuit Operation	Figure modified.
148	3. Explanation of Operations ■Operations of Low-voltage Detection Interrupt Circuit ●Explanation of Circuit Operation	Description for low-power mode added. Figure modified.
149	3. Explanation of Operations ■Operations of Low-voltage Detection Interrupt Circuit ●Low Power Mode	Added.
155	5.1. Low-voltage Detection Voltage Control Register (LVD_CTL)	Notes added.
160	6. Usage Precautions	Added.
162	CHAPTER 5-4: Low-voltage Detection (C) 1. Overview ■Overview of Low-voltage Detection Circuit ●Operations of Low-voltage Reset Circuit	Description corrected.
165	3. Explanation of Operations ■Operations of Low-Voltage Detection Reset Circuit ●Explanation of Circuit Operation	Description modified. Figure modified.
166	3. Explanation of Operations ■Operations of Low-voltage Detection Interrupt Circuit ●Explanation of Circuit Operation	Figure modified.

Page	Section	Change Results
171, 172, 174, 175	5. Registers 5.1. Low-voltage Detection Voltage Control Register (LVD_CTL)	TYPE 10 to TYPE 12 products added. Description of the SVHR bit and SVHI bit modified. Notes added.
180	6. Usage Precautions	Added.
183	CHAPTER 6: Low Power Consumption Mode 1. Overview of Low Power Consumption Mode ■Table of low power consumption modes equipped in each TYPE	In Table 1-1 and Table 1-2, TYPE 10 to TYPE 12 products added.
197	3. Operations of Standby Modes ■Return factors from standby modes	Table 3-4 corrected. Description of RTC mode corrected.
203	3.3. Operation of RTC Mode ■Functions of RTC mode ●Watch counter and RTC	Description corrected.
204	3.3. Operation of RTC Mode ■Return from RTC mode ●Return by interrupt	Description corrected.
223	7. Deep Standby Return Factor Determination Procedure	Notes added.
236	8. List of Low Power Consumption Mode Registers 8.9. Deep Standby RAM Retention Register (DSRAMR)	For "[bit1:0] SRAMR: On-chip SRAM retention control bits", description of TYPE 12 product added.
242	CHAPTER 7-1: Configuration of interrupts 1. Configuration	In Table 1-1 of "n Reference chapter of the interrupt controller", TYPE 10 to TYPE 12 products added.
427	CHAPTER 9: DMAC 3. Functions and Operations of DMAC 3.3. Hardware-Demand Transfer	Figure 3-3 corrected.
428	3.4. Hardware-Block Transfer & Burst Transfer	Figure 3-4 corrected.
466	6. Usage Precautions	"■Note on Transfer Memory Space" added.

Page	Section	Change Results
494, 495	CHAPTER 10: I/O Port 4. Registers 4.7. Extended Pin Function Setting Register (EPFRx) ■List of EPFRx Register Configuration	In the table, EPFR16 to EPFR18 added. <Notes> modified. Table 4-2 and Table 4-3 added.
579 to 581	4. Registers 4.27. Special Port Setting Register (SPSR)	For description of each product TYPE, MAINXC bit and SUBXC bit modified. <Notes> modified.
628 to 630	CHAPTER 12: External Bus Interface 4. Connection Examples	Figure 4-1 to Figure 4-6 corrected.
654 to 659	CHAPTER 13: Debug Interface Whole	Description of serial wire debug port (SW-DP) added.
654	CHAPTER 13: Debug Interface 1. Overview	In Table 1-1, TYPE 10 to TYPE 12 products added.
673	APPENDIXES A Register Map 1. Register Map	TYPE10 toTYPE12 products added to FLASH I/F register map.
687		TYPE10 toTYPE12 added as the target product TYPE of 12bit A/DC register map.
703		TYPE10 toTYPE12 added as the target product TYPE of LVD register map.
707, 708		MFS register map modified for TYPE8/TYPE12 products and the others.
711		TYPE10 toTYPE12 added as the target product TYPE of RTC register map.
733	APPENDIXES D Product TYPE List 1. Product TYPE List	In Table 11, TYPE 10 Product List added. In Table 12, TYPE 11 Product List added. In Table 13, TYPE 12 Product List added.

NOTE: Please see “Document History” about later revised information.

Revision History

Document Revision History

Document Title:	32-Bit Microcontroller FM3 Family Peripheral Manual
Document Number:	002-05586

Revision	ECN No.	Origin of Change	Description of Change
**	-	AKIH	New Specification
*A	5028075	TOYO	Modified from USB function to USB device. P.27 In Table 1-1, added Low-speed CR prescaler. P.42 In Figure 2-1, added Low-speed CR prescaler. P.96 In Figure 4-10, modified from 4.08MHz to 4.008MHz. P.109-116 Added the chapter of Low-speed CR prescaler. P.135 Added the description about reset occur in main timer mode. Added The settings for CSV OFF and external reset. P.155,156 Modified the description of TYPE in PONR bit. P.169,188,208 Added two items in the note of LVD_CTL register. P.231 Added that HDMI-CEC transmission interrupt is not a return factor of standby mode. P.423 Added the note of Deep standby mode. P.432 Added the note of NMI pin input. P.439 Added the condition of multi-function serial. P.478 Added the note of PB bit. P.518 Added the note of NMI pin input. P.521 Added the IGTRG bit. P.597 Modified the MAINXC bit description of TYPE6/8 to 12. P.640 Added the note of data hold cycle. P.685 Added the note of reserved area. Appendixes D. Added MB9A130LB, MB9AB40NB, MB9AAA0N, MB9A1A0N, MB9A150RA, MB9A150RB, and MB9B520TA series.
*B	5739699	YSAT	Adapted Cypress new logo

Revision	ECN No.	Origin of Change	Description of Change
*C	5967638	NOSU	P.3 Added the note to refer to datasheets for supported peripheral functions. P.3 Updated URL of Microcontroller Support Information web page. P.10 Added MB9AF1A2L, and MB9AF1A1L. P.220, P.221, P.247, P.249 Fixed incorrect descriptions about powered-off areas during the deep standby RTC/Stop modes. P.424 Added the description about return from RTC mode P.425 Fixed incorrect assertion on ER1 signal in Figure 3-5. P.504 Added PCR8 register. P.505 Added the note of PCR8 register. P.622, P.631, Fixed function description of MNCLE signal Chip enable → Command latch enable Appendixes A. Fixed incorrect initial value of PCCR register for TYPE0/1/2/4/5 products Appendixes D. Fixed incorrect part numbers.