EZ-PD™ PMG1x (CYPMxxxx)

Programming specification

About this document

Scope and purpose

This document provides a generic description of the programming specification necessary to program nonvolatile memory for the target devices. The document uses the word “target” as the generic name for all devices supported by this manual. It describes the communication protocol required for access by an external programmer, and explains the programming algorithm. The programming algorithms described in the following sections are compatible with all target devices. There are differences among the various devices, for example in row size. This document details any differences.

Intended audience

This programming specification is intended for those developing programming solutions for the target devices. This includes third-party production programmers, as well as customers wanting to develop their own programming systems. See **https://www.infineon.com/cms/en/design-support/tools/programming-testing/psoc-programming-solutions** for more information.

Table of contents

About this document . . . 1
Table of contents . . . 2
1 Introduction . . . 3
1.1 Target devices . . . 3
1.2 Programmer . . . 3
1.3 Target overview . . . 4
2 Required data . . . 6
2.1 Hex file origin . . . 6
2.2 Nonvolatile subsystem . . . 6
2.3 Organization of the hex file . . . 8
3 Communication interface . . . 10
3.1 The protocol stack . . . 10
3.2 SWD interface . . . 10
3.3 Hardware access commands . . . 11
3.4 Pseudocode . . . 13
3.5 Physical layer . . . 14
4 Programming algorithm . . . 16
4.1 High-level programming flow . . . 16
4.2 Subroutines used in the programming flow . . . 17
4.3 Step 1A – Acquire chip after hard reset . . . 19
4.4 Step 1B – Acquire chip (alternate method) . . . 23
4.5 Step 2 – Check silicon ID . . . 26
4.6 Step 3 – Erase all flash . . . 27
4.7 Step 4 – Checksum privileged . . . 28
4.8 Step 5 – Program flash . . . 29
4.9 Step 6 – Verify flash . . . 32
4.10 Step 7 – Program protection settings . . . 34
4.11 Step 8 – Verify protection settings . . . 37
4.12 Step 9 – Verify checksum . . . 40
A Chip-level protection . . . 42
B Intel hex file format . . . 44
C Serial Wire Debug (SWD) protocol . . . 45
D Timing specifications of the SWD interface . . . 47
Revision history . . . 48

1 Introduction

This document provides a generic description of the programming specification necessary to program nonvolatile memory for the target devices. The document uses the word “target” as the generic name for all devices supported by this manual. It describes the communication protocol required for access by an external programmer, and explains the programming algorithm. The programming algorithms described in the following sections are compatible with all target devices. There are differences among the various devices, for example in row size. This document details any differences.

This programming specification is intended for those developing programming solutions for the target devices. This includes third-party production programmers, as well as customers wanting to develop their own programming systems. See **https://www.infineon.com/cms/en/design-support/tools/programming-testing/psoc-programming-solutions** for more information.

1.1 Target devices

This manual covers the following devices:

- EZ-PD™ PMG1 MCU

1.2 Programmer

A programmer is a hardware-software system that stores a binary program (hex file) in the device's program (flash) memory. The programmer is an essential component of the engineer's prototyping environment or an integral element of the manufacturing environment (mass programming). **Figure 1-1** illustrates a high-level view of the development environment.

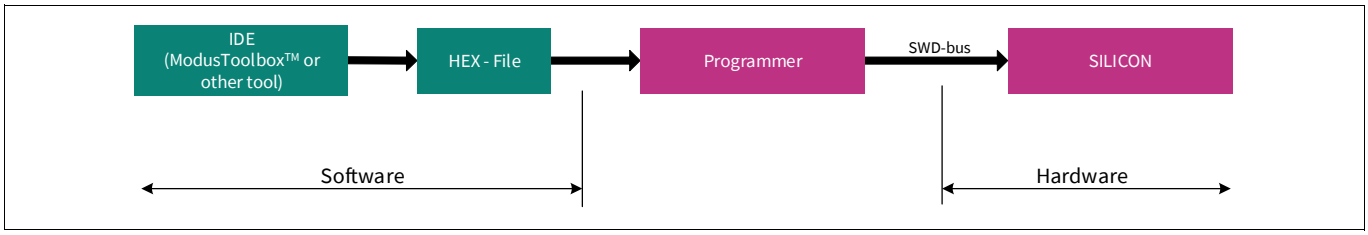

Figure 1-1. Programmer in development environment

In a manufacturing environment, the integrated development environment (IDE) block is absent because its main purpose is to produce a hex file. The programmer performs three functions:

- Parses the hex file and extracts the necessary information
- Connects with the silicon as a Serial Wire Debug (SWD) master
- Implements the programming algorithm by translating the hex data into SWD signals

This document does not discuss the specific implementation of the programmer. It focuses on data flow, the physical connection, and algorithms. Specifically, it covers the following topics, which correspond to the three functions of the programmer:

- Data to be programmed
- Interface with the chip
- Algorithm used to program the target device

1.3 Target overview

Table 1-1 summarizes the devices covered by this document. It details the principal programming-related features, and the values are for each device series. This document refers to this table when the programming details vary among the target devices. The part can be programmed after it is installed in the system by using the SWD interface.

Table 1-1. Programming values

Feature	EZ-PD™ PMG1-S0 MCU	EZ-PD™ PMG1-S1 MCU	EZ-PD™ PMG1-S2 MCU	EZ-PD™ PMG1-S3 MCU	EZ-PD™ PMG1-B1 MCU	EZ-PD™ PMG1-B2 MCU
CPU	CM0	CM0	CM0	CM0+	CM0	CM0
SWD ID	0x0BB1 1477	0x0BB1 1477	0x0BB1 1477	0x0BC1 1477	0x0BB1 1477	0x0BB1 1477
Silicon ID[a)]	0x2020xxB0-0x204FxxB0	2A20xxBA-2AFFxxBA	0x1D20xxAD-0x1DFFxxAD	0x35xxxxC5	0x3A20xxCA - 0x3A3FxxCA	0x1FA0xxAF - 0x1FBFxxAF
Row size (bytes)	128	256	128	256	256	256
Number of macros	1	1	2	2	1	1
Rows per macro	512	512	512	512	512	512
SET_IMO_48MHz required for flash operations[b)]	Yes	Yes	Yes	Yes	Yes	Yes
Flash protection address increment for each array[c)]	NA	NA	0x400[d)]	0x800[d)]	NA	NA
CPUSS_SYSREQ register address	0x4010 0004	0x4010 0004	0x4010 0004	0x4010 0004	0x4010 0004	0x4010 0004
CPUSS_SYSARG register address	0x4010 0008	0x4010 0008	0x4010 0008	0x4010 0008	0x4010 0008	0x4010 0008
SRAM_PARAMS_BASE[e)]	0x2000 0100	0x2000 0100	0x2000 0100	0x2000 0100	0x2000 0100	0x2000 0100
TEST_MODE register address	0x4003 0014	0x4003 0014	0x4003 0014	0x4003 0014	0x4003 0014	0x4003 0014
SFLASH_MACRO_0 address	0x0FFF F000	0x0FFF F000	0x0FFF F000	0x0FFF F000	0x0FFF F000	0x0FFF F000
SFLASH_MACRO_1 address	NA	NA	0x0FFF F400[d)]	0x0FFF F800[d)]	NA	NA

a) See **"Step 2 – Check silicon ID" on Page 26** for information on the Silicon ID.
b) See the pseudocode for **"Step 1A – Acquire chip after hard reset" on Page 19** or **"Step 1B – Acquire chip (alternate method)" on Page 23**.
c) Required for **"Step 8 – Verify protection settings" on Page 37** in devices with multiple flash arrays.
d) EZ-PD™ PMG1-S2/S3 MCU product family has two FLASH macros. The second SFLASH macro for EZ-PD™ PMG1-S2/S3 MCU contains the protection row information for the second FLASH macro at this offset.
e) SRAM starting address for storing SROM parameters like flash row data.

Introduction

This document focuses on the specific programming operations without referencing the silicon architecture. You are referred to the table above. See the appendices for additional details. This document includes four appendices:

- **A Chip-level protection on page 42**
- **B Intel hex file format on page 44**
- **C Serial Wire Debug (SWD) protocol on page 45**
- **D Timing specifications of the SWD interface on page 47**

Other device-specific information such as electrical characteristics, can be found in the target's datasheet and in the reference manual.

2 Required data

This chapter describes the information that the programmer must extract from the hex file to program the target silicon.

2.1 Hex file origin

Customers use ModusToolbox™ software or a third-party IDE to develop their projects. After development is completed, the nonvolatile configuration of the silicon is saved in the file. Only three records in this file actually refer to flash memory:

- User's program (code)
- Flash row-level protection
- Chip-level protection

Other records are auxiliary and are used to maintain the integrity of the programming flow.

2.2 Nonvolatile subsystem

The size of flash memory varies depending on the target. Flash organization varies per target as well. A device may have one or two macros. The size of a row (the number of bytes per flash row) and the number of rows per flash macro also varies. See Table 1-1 in **"Target overview" on Page 4** for details some of these differences.

A programmer writes one row at a time. The number of rows varies based on the size of the flash memory. In addition to the users' rows, the flash macros contain supervisory rows, which store:

- Row-level protection bits
- Chip-level protection byte (only in macro 0)

User flash programming must take into account the number of rows, bytes per row, the number of macros, and other variables. **Figure 2-1** shows a *typical* flash organization, with 512 rows of 128 bytes, and two macros. Your device may have only one macro, with a different number of rows and bytes/row. Other critical values may vary as well. For example, for some devices the offset for the chip level protection byte in the Supervisory row is 0x7F, as in the figure. In others, the offset is 0xFF.

Refer to Table 1-1 in **"Target overview" on Page 4** to determine the actual flash organization for your target. See the target datasheet for the flash size. Determine the number of macros by dividing the number of rows by the number of rows per macro.

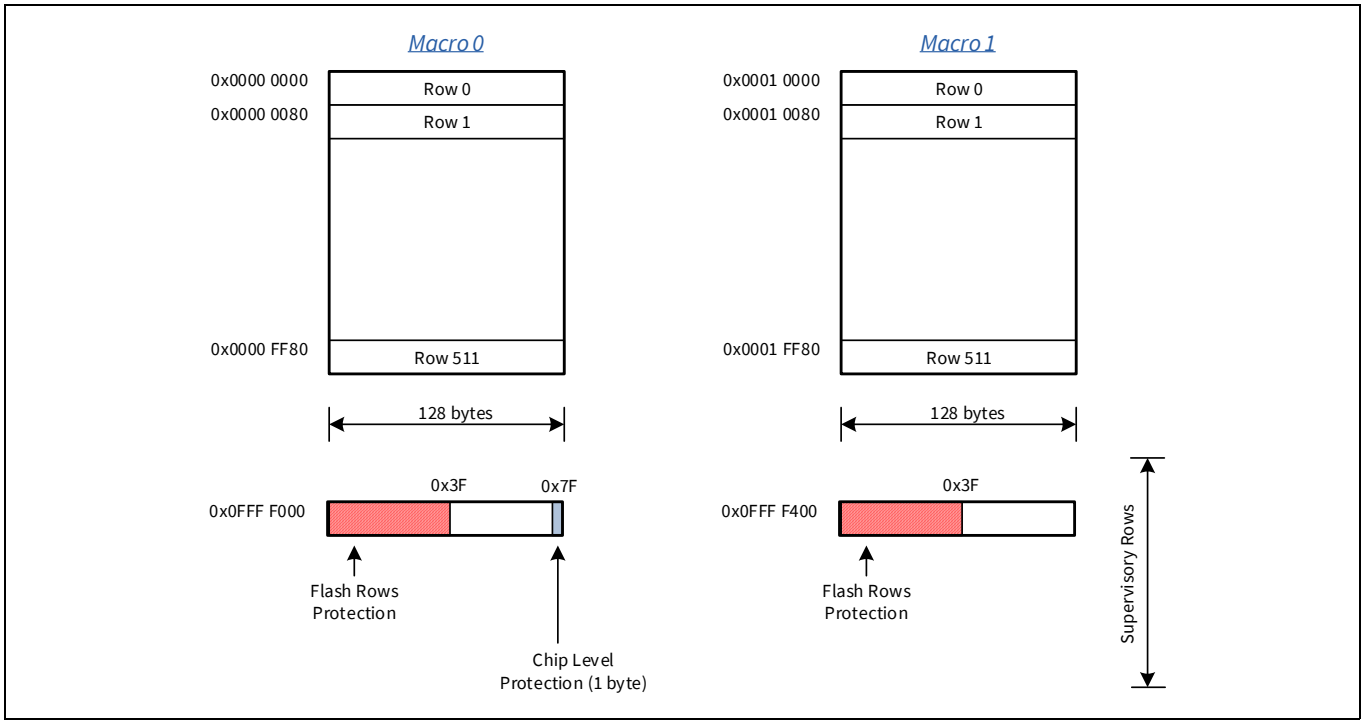

Figure 2-1. A typical nonvolatile subsystem

There is also one protection bit for each row in the macro. The flash row-level protection setting prevents a row from being written but does not prevent a row's data from being read. Each user's row in the macro is associated with one protection bit. A bit value of 0 means that the row is unprotected. A value of 1 means the row is protected. The number of protection bytes is the number of rows divided by eight.

The formulas are shown in **Table 2-1**:

Table 2-1. Calculating rows, macros, and protection bytes

Item	Formula	Example	Comment
Row size in bytes	L - varies per target	128	See Table 1-1 in **Target overview chapter on page 4**.
Number of rows in a macro	*RowsPerMacro* - varies per target	256	
Total number of rows	$N = \frac{FlashSize}{L}$	512 = 64KB/128	Find *FlashSize* in the datasheet for the specific target.
Total number of macros	$K = \frac{N}{RowsPerMacro}$	2 = 512/256	Calculated from total number of rows (based on *FlashSize*)
Number of protection bytes per macro	$PB = \frac{RowsPerMacro}{8}$	32 = 256/8	Calculated

Flash memory is mapped directly to the CPU's address space starting at 0x00000000. Therefore, the firmware or external programmer can read its content directly from the given address.

The last type of nonvolatile information in flash is chip-level protection. This consists of one byte that restricts access to the chip's resources (register, SRAM, and flash) by an external programmer or debugger. For example, in PROTECTED mode, the programmer cannot read or write either flash or SRAM; in KILL mode, the SWD interface is locked in silicon and the chip cannot be reprogrammed. The chip-level protection setting is programmed along

with the flash row-level protection into the supervisory row of the macro (see **Figure 2-1**), along with the flash row-level protection. For more information about chip-level protection, see **Appendix A: Chip-level protection on page 42**.

2.3 Organization of the hex file

The hex file describes the nonvolatile configuration of the project. It is the data source for the programmer.

The hex file follows the Intel Hex File format. Intel's specification is generic and defines only some types of records in the hex file. The specification allows customizing the format for any possible silicon architecture. The silicon vendor defines the functional meaning of the records, which typically varies for different chip families. See **Appendix B: Intel hex file format on page 44** for details of the Intel Hex File format.

The target family defines five types of data sections in the hex file:

- User flash
- Checksum
- Flash protection
- Metadata
- Chip-level protection

See **Figure 2-2** to determine the allocation of these sections in the address space of the hex file.

The address space of the hex file does not map to the physical addresses of the CPU (other than the user's flash, which is a coincidence). The programmer uses hex file addresses to read sections from the hex file into its local buffer. The programmer writes this data into the corresponding silicon addresses.

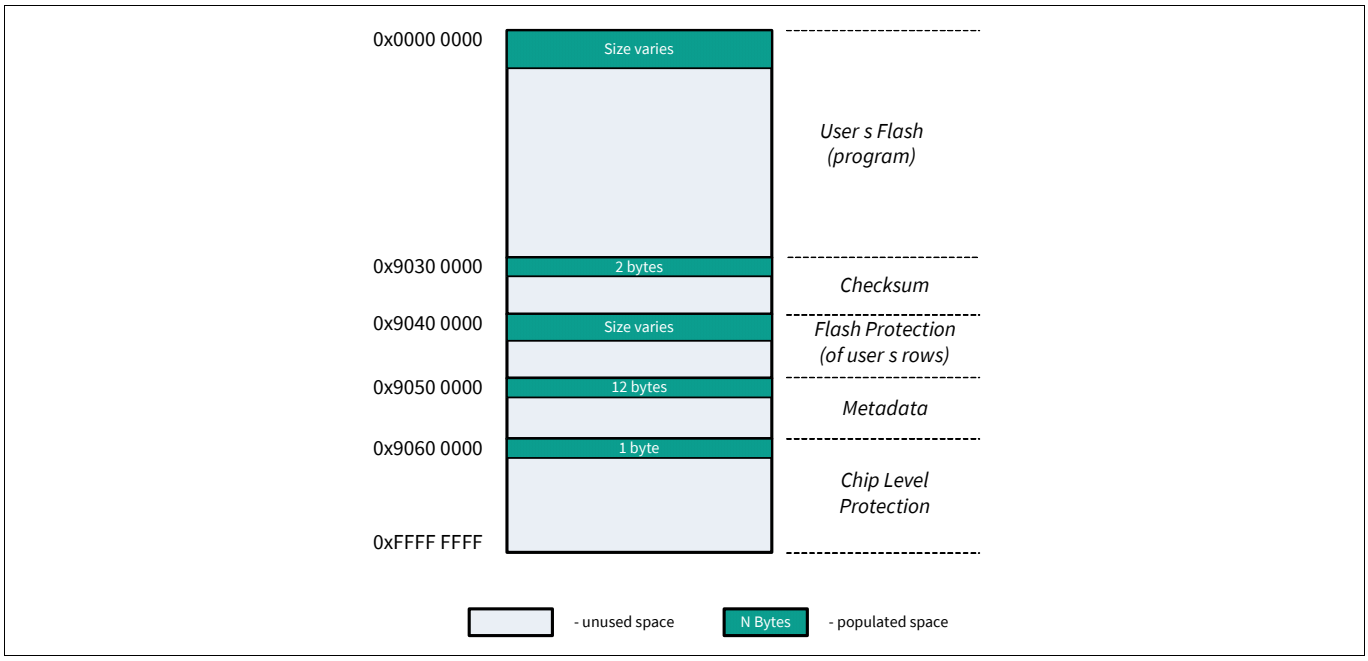

Figure 2-2. Hex file organization

0x0000 0000 – User's Flash (size varies): This is the user's program (code) that must be programmed. The size of this section matches the flash size of the target part. The programmer can either read all of this section at once or gradually by blocks where each block is equal to the row size for the device. The programming of the flash is carried out on the basis of one row for each request. See Table 1-1 in **"Target overview" on Page 4** for the row size for each device series.

0x9030 0000 – Checksum (2 bytes): This is the checksum of the entire user flash section—the arithmetical sum of every byte in the user's flash. Only two least significant bytes (LSB) of the result are saved in this section, in big-

endian format (most significant byte (MSB) first). This must be used by the programmer to check the integrity of the hex file and to verify the quality of the programming. In this context, “integrity” means that the checksum and user’s flash sections must be correlated in this file. At the end of programming, the checksum of flash (two LSBs) is compared to the checksum from the hex file.

0x9040 0000 – Flash Protection (number of bytes varies): This data is programmed into supervisory rows of the flash macros (see **Figure 2-1**). Every bit defines the write-protection setting for the corresponding user row. The number of bytes to be read from this section depends on the flash size.

Protection Size = Flash Size / Row Size / 8

Therefore, for a 128 KB part, flash protection consists of 128 bytes.

0x9050 0000 – Metadata (12 bytes): This section contains data that is not programmed into the target device. Instead, it is used to check data integrity of the hex file and the silicon ID of the target device. **Table 2-2** lists the fields in this section.

Table 2-2. Metadata in hex file

Offset	Data type	Length in bytes
0x00	Hex file version	2 (big-endian)
0x02	Silicon ID	4 (big-endian)
0x06	Reserved	1
0x07	Reserved	1
0x08	Internal use	4

- **Hex file version**: This 2-byte field in the hex file defines its version (or type). The version for the target family is “2”. The programmer should use this field to make sure that the hex file corresponds to the target device, or to select the appropriate parsing algorithm if the hex file supports several families.
- **Silicon ID**: This 4-byte field (big endian) represents the ID of the target silicon:

  byte[0] - Silicon ID Hi

  byte[1] - Silicon ID Lo

  byte[2] - Revision ID

  byte[3] - Family ID

During programming, the ID of the acquired device is compared to the content of this field. To start programming, three of these fields must match. The Revision ID must be skipped, because it is not essential for programming—there are many silicon revisions possible that do not change its functionality. Infineon does not guarantee reliable programming (or data retention) if third-party programmers ignore this condition.

- **Reserved**: Not used by the target family.
- **Internal Use**: This 4-byte field is used internally by the PSOC™ Programmer software. Because it is not related to actual programming, this field should be ignored by third-party vendors.

0x9060 0000 – Chip-level Protection (1 byte): This section represents chip-level protection of the programmed part (see **Figure 2-1**). For more information, see **Appendix A: Chip-level protection on page 42**.

3 Communication interface

This chapter explains the low-level details of the communication interface.

3.1 The protocol stack

Figure 3-1 illustrates the stack of protocols involved in the programming process. The programmer must implement both hardware and software components.

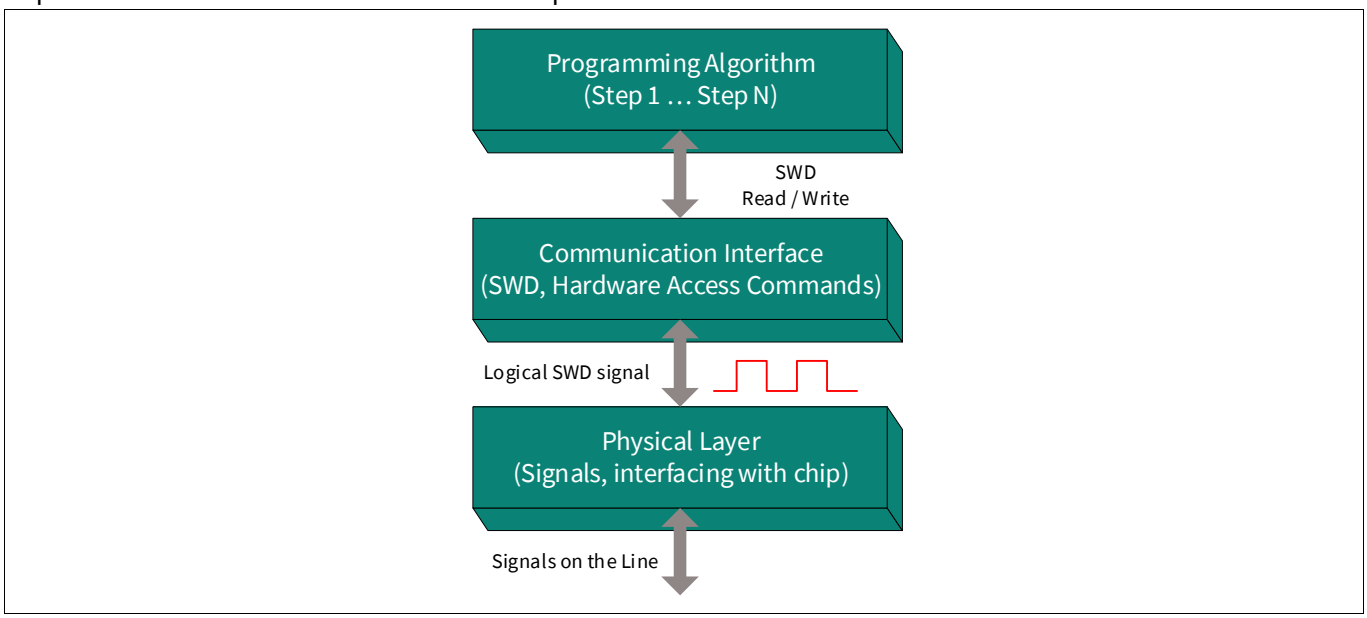

Figure 3-1. Programmer's protocol stack

The Programming Algorithm protocol, the topmost protocol, implements the entire programming flow in software, using atomic SWD commands. Its smallest element is the SWD command. For more information on this algorithm, see **"Programming algorithm" on Page 16**.

The SWD Interface and physical layer are lower layer protocols. Note that the physical layer is the complete hardware specification of the signals and pins, and includes drive modes, voltage levels, resistance, and other components.

The SWD interface layer is a bridge between pure software and hardware implementations. The SWD interface helps to isolate the programming algorithm from hardware specifics, which makes the algorithm reusable. The SWD interface must transform the SWD commands into line signals.

3.2 SWD interface

The target silicon integrates the standard Cortex®-M0/M0+ debug access port (DAP) block provided by Arm®. It complies with the Arm® specification *Arm® Debug Interface v5. Architecture Specification*. The target silicon does not support the JTAG interface.

Figure 3-2 shows the top-level architecture of the silicon. It includes the debug interface, CPU subsystem, memory, and peripherals. The standard Arm® modules are outlined in red. The following acronyms are used in this figure:

- HSIOM – High-Speed I/O Matrix
- DAP – Debug Access Port
- AHB – Advanced High-performance Bus
- SPC – System Performance Controller

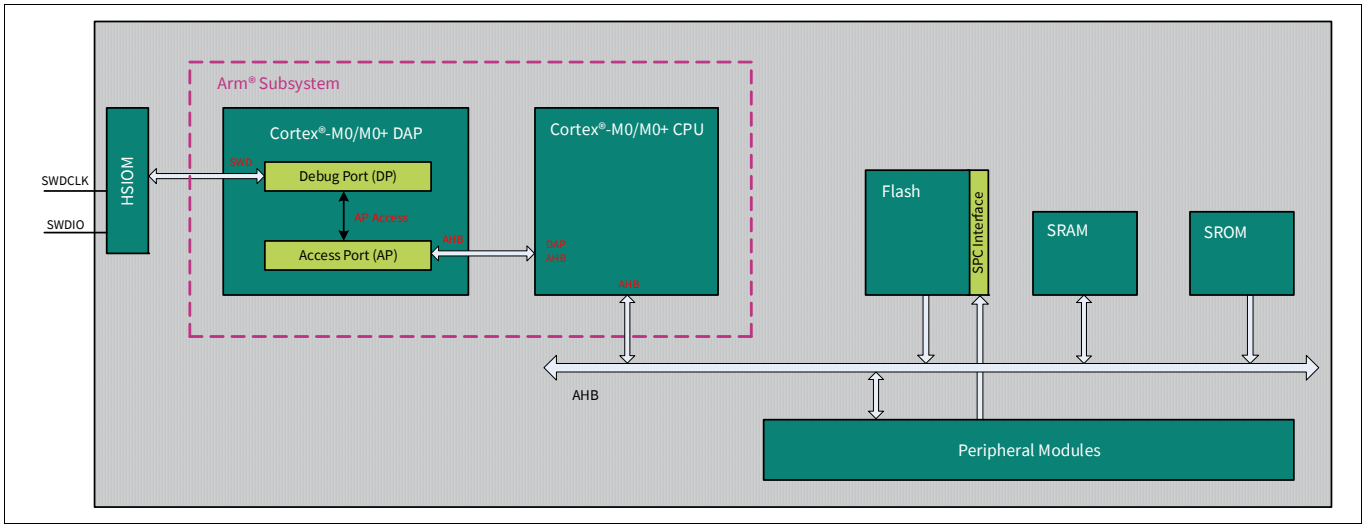

Figure 3-2. Top-level silicon architecture

The SWD interface uses the SWD protocol developed by Arm®. The SWD interface defines only two digital pins to communicate with an external programmer or a debugger. The SWDCLK and SWDIO pins are sufficient for bidirectional, semi-duplex data exchange.

Only three types of SWD commands can appear on the bus: Read, Write, and Line Reset. The Line Reset command is used only once during programming to establish a connection with the device. The Read and Write commands compose the rest of the programming flow.

The programmer can access most silicon resources through the SWD interface. All programming algorithms are stored in SROM; the external programmer uses the SWD API to program the flash. During programming of the flash row, the system code is executed from the SROM. It communicates with the SPC module, which "knows" how to program flash. In contrast to a write operation, reading from flash is an immediate operation that is carried out directly from the specified address. Reading works on a word basis (4-byte); writing works on a row basis. Row size varies per device. See Table 1-1 in **"Target overview" on Page 4** for the row size for your device.

A typical programmer loads all necessary parameters into the SRAM (I/O registers) and then makes a system call (SWD Read and Write) from the SROM.

3.3 Hardware access commands

The Cortex®-M0/M0+ DAP module, shown in **Figure 3-2**, supports three commands: Read, Write, and Line Reset. All are defined in the Arm® specification. The APIs must be implemented by the SWD Interface layer. In addition, the Programming Algorithm protocol requires two extra commands to manipulate the hardware: Power(), and ToggleReset(). **Table 3-1** lists the hardware access commands used by the software layer.

Table 3-1. Hardware access commands

Command	Parameters	Description
SWD_LineReset		Standard Arm® command to reset the debug port (DAP). It consists of at least 50 clock cycles with data = 1; that is, with the SWDIO asserted HIGH by the programmer. Transaction must be completed by at least 1 clock with SWDIO asserted LOW. This sequence synchronizes the programmer and chip; it is the first transaction in the programming flow.
SWD_Write	IN APnDP, IN addr, IN data32, OUT ack	Sends a 32-bit data to the specified register of the DAP. The register is defined by the "APnDP" (1 bit) and "addr" (2 bits) parameters. The DAP returns a 3-bit status in "ack".

Table 3-1. Hardware access commands *(continued)*

Command	Parameters	Description
SWD_Read	IN APnDP, IN addr, OUT data32, OUT ack, OUT parity	Reads a 32-bit data from the specified register of the DAP. The register is defined by the “APnDP” (1 bit) and “addr” (2 bits) parameters. DAP returns a 32-bit data, status, and parity (control) bit of the read 32-bit word.
ToggleReset		Generates the reset signal for the target device. The programmer must have a dedicated pin connected to the XRES pin of the target device.
Power	IN state	If the programmer powers the target device, it must have this function to supply power to the device.

For information on the structure of the SWD read and write packets and their waveform on the bus, see **Appendix C: Serial Wire Debug (SWD) protocol on page 45**.

The SWD_Read and SWD_Write commands allow accessing Cortex®-M0/M0+ DAP module registers. The DAP functionally is split into two control units:

- Debug Port (DP) – Responsible for the physical connection to the programmer or debugger.
- Access Port (AP) – Connects the DAP module and one or more debug components (such as the Cortex®-M0/M0+ CPU).

The external programmer can access the DP and AP registers using the following bits in the SWD packet:

- APnDP – Select access port (0 – DP, 1 – AP).
- ADDR – 2-bit field addressing a register in the selected access port.

Use the SWD_Read and SWD_Write commands to access these registers. They are the smallest transactions that can appear on the SWD bus. **Table 3-2** shows the DAP registers used during programming.

Table 3-2. DAP registers (in Arm® notation)

Register	APnDP (1 bit)	Address (2-bit)	Access (R/W)	Full name
IDCODE	0	00b	R	Identification Code Register
ABORT	0	00b	W	AP ABORT Register
CTRL/STAT	0	01b	R/W	Control/Status Register
SELECT	0	10b	W	AP Select Register
CSW	1	00b	R/W	Control Status/Word Register (CSW)
TAR	1	01b	R/W	Transfer Address Register
DRW	1	11b	R/W	Data Read/Write Register

For more information about these registers, see the *Arm® Debug Interface v5. Architecture Specification*.

3.4 Pseudocode

This document uses easy-to-read pseudocode to show the programming algorithm. These two commands are used for the programming script:

```
Write_DAP (Register, Data32)
Read_DAP (Register, out Data32)
```

Where the `Register` parameter is an AP/DP register defined by APnDP and address bits (see **Table 3-2**). The pseudocommands correspond to read or write SWD transactions. For example:

```
Write_DAP (TAR, 0x20000000)
Write_DAP (DRW, 0x12345678)
Read_DAP (IDCODE, out swd_id)
```

The `Register` parameter can be represented as a C structure:

```
struct DAP_Register
{
         byte APnDP; // 1-bit field
         byte Addr;  // 2-bit field
};
```

Then, DAP registers will be defined as:

```
DAP_Register TAR   = { 1, 1 },
             DRW   = { 1, 3 },
             IDCODE= { 0, 0 };
```

The defined Write and Read pseudocommands are successful if they return the ACK status of the SWD transaction. For the Read transaction, the parity bit must be taken into account (corresponds to read data32 value). If the status of the transaction, the parity bit, or both is incorrect, the transaction has failed. In this case, depending on the programming context, programming must terminate or the transaction must be tried again.

The implementation of Write and Read pseudocommands based on the hardware access commands SWD_Read and SWD_Write (**Table 3-1**) is as follows.

```
SWD_Status Write_DAP (Register, data32)
{
  SWD_Write ( Register.APnDP, Register.Addr, data32, out ack);
  return ack;
}

SWD_Status Read_DAP (Register, out data32)
{
  SWD_Read (Register.APnDP, Register.Addr, out data32, out ack, out parity);
  if (ack == 3'b001) //ACK, then also check the parity bit
  {
    Parity_data32 = 0x00;
    for (i=0; i<32; i++)
    {
      Parity_data32 ^= ((data32 >> i) & 0x01);
      if (Parity_data32 != parity)
      {
        ack = 3'b111; //NACK
      }
    }
  }
  return ack;
}
```

The programming code in **Chapter 4. Programming algorithm** is based mostly on the Write and Read pseudo-commands and some commands in **Table 3-1**.

3.5 Physical layer

This section describes the hardware connections between the programmer and the target device for programming. It shows a connection schematic in **Figure 3-3**. Your particular device may vary. Consider VDD in this case to represent a generic power supply domain. For details on the power supply, electrical characteristics, and the actual location of SWD/Power on the part's package, see the datasheet for the specific target.

PMGx

Datasheets for EZ-PD™ PMG1 MCU devices: **EZ-PD™ PMG1-S0 MCU**, **EZ-PD™ PMG1-S1 MCU**, **EZ-PD™ PMG1-S2 MCU**, **EZ-PD™ PMG1-S3 MCU, EZ-PD™ PMG1-B2 MCU**

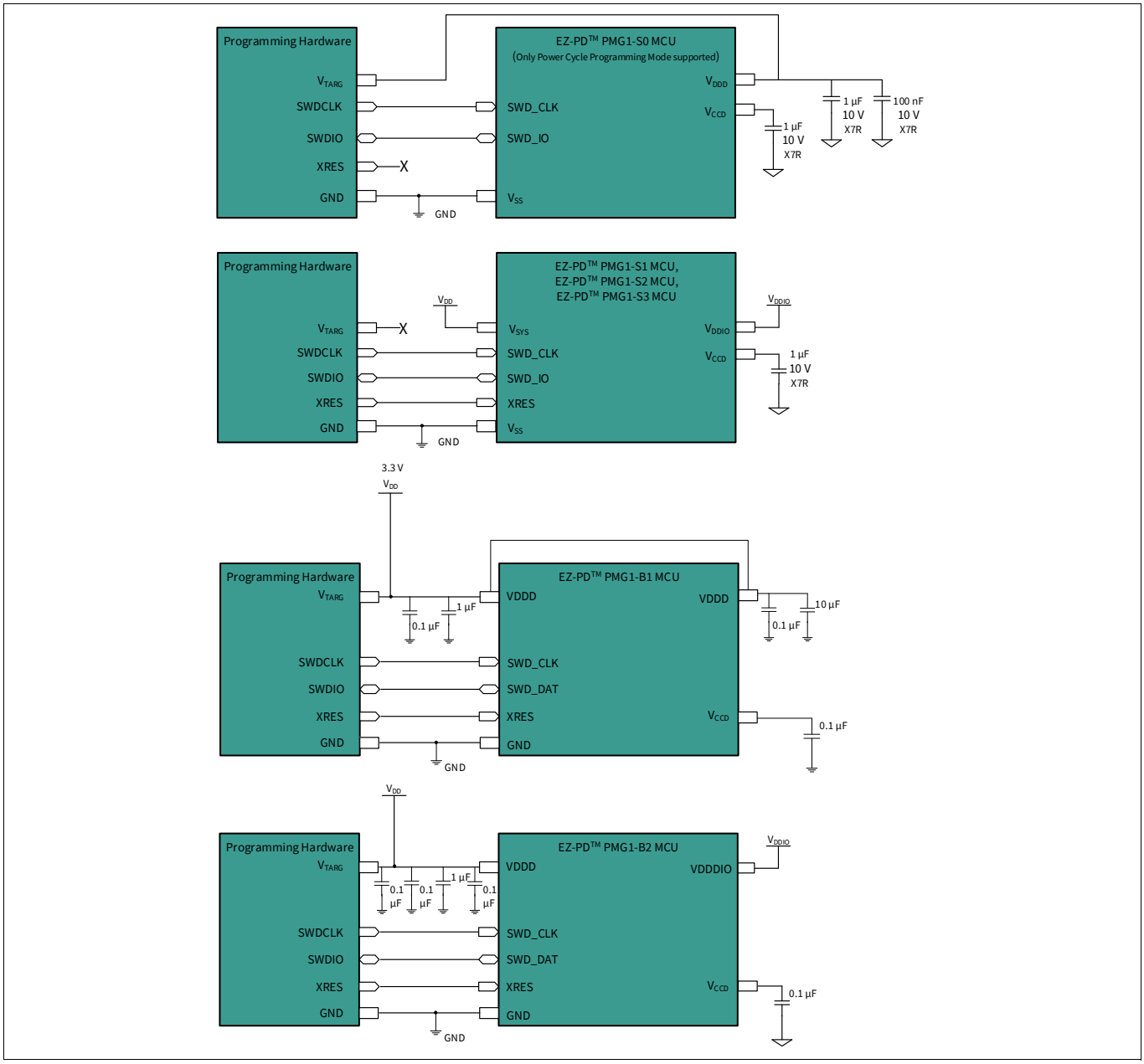

Figure 3-3. Connection schematic of programmer

Only five pins are required to communicate with the chip. Note that the SWDCLK and SWDIO pins are only required by the SWD protocol. The silicon requires an additional XRES pin that is not related to the Arm® standard.

It is used to reset the part as a first step in a programming flow. Check the datasheet for your target for actual pins used.

You can program a chip in either Reset or Power Cycle mode. The mode defines only the first step—how to reset the part—in the programming flow. The rest of the steps are identical (SWD traffic).

- **Reset mode**: To start programming, the host toggles the XRES line and then sends SWD commands (see **Table 3-1**). The power on the target board can be supplied by the host or by an external power adapter (the V_{DD} line can be optional). Reset mode is not supported by EZ-PD™ PMG1-S0 MCU devices because they do not have an XRES pin. Power must be supplied by the host programmer.
- **Power Cycle mode**: To start programming, the host powers on the target and then starts sending the SWD commands. The XRES line is not used. This is the only mode supported by EZ-PD™ PMG1-S0 MCU devices.

It is recommended that the programmer uses all five pins and supports at least Reset mode programming. Power Cycle mode support is optional.

Table 3-3. Programming mode

Mode	Necessary pins	Unused pins	Use cases
Reset	VDD (optional) GND XRES SWDCLK SWDIO	VDD (if self-powered)	The host supplies power and toggles XRES. All five pins are used. (This is the most popular programming method). The board can be self-powered (V_{DD} is not needed). The board consumes too much current, which the programmer cannot supply (V_{DD} is not needed).
Power Cycle	VDD GND SWDCLK SWDIO	XRES	If the XRES pin is not available on the part's package, the Power Cycle mode is the only way to reset a part. If the XRES pin is present, Reset mode is recommended. Some third-party SWD masters can use this mode if they do not implement the XRES line, but can supply power (power on/off).

Table 3-4. Target pin names and requirements

Pin name	Function	External programmer drive modes
VDDD	Digital power supply Input	Positive voltage – powered by external power supply or by programmer.
VSS	Power supply return	Low resistance ground connection. Connect to circuit ground.
XRES	External active low reset input.	Output: Drive TTL levels
SWDCLK	SWD clock input (1.5 MHz–14 MHz)	Output: Drive TTL levels
SWDIO	SWD data line - bidirectional	Output: Drive TTL levels Input: Read TTL levels in High-Z mode

See the device datasheet for target-specific SWD timing specifications, voltages, power supply information, and other values.

4 Programming algorithm

This chapter describes in detail the programming flow of the target device. It starts with a high-level description of the algorithm and then describes each step using pseudocode. All code is based on subroutines composed of atomic SWD instructions (see **"Pseudocode" on Page 13**). These subroutines are defined in **"Subroutines used in the programming flow" on Page 17**. The ToggleReset() and Power() routines are also used (see **Table 3-1**).

4.1 High-level programming flow

Figure 4-1 shows the sequence of steps that must be executed to program the target device. The following sections describe these steps in detail. All the steps in this programming flow must be completed successfully for a successful programming operation.

The programmer should stop the programming flow if any step fails. In addition, in pseudocode, it is assumed that the programmer checks the status of each SWD transaction (Write_DAP, Read_DAP, WriteIO, ReadIO). This extra code is not shown in the programming script. If any of these transactions fails, then programming must be aborted.

Flash programming is implemented using the SROM APIs. The external programmer puts the parameters into the SRAM (or registers) and makes system calls, which in turn perform flash updates.

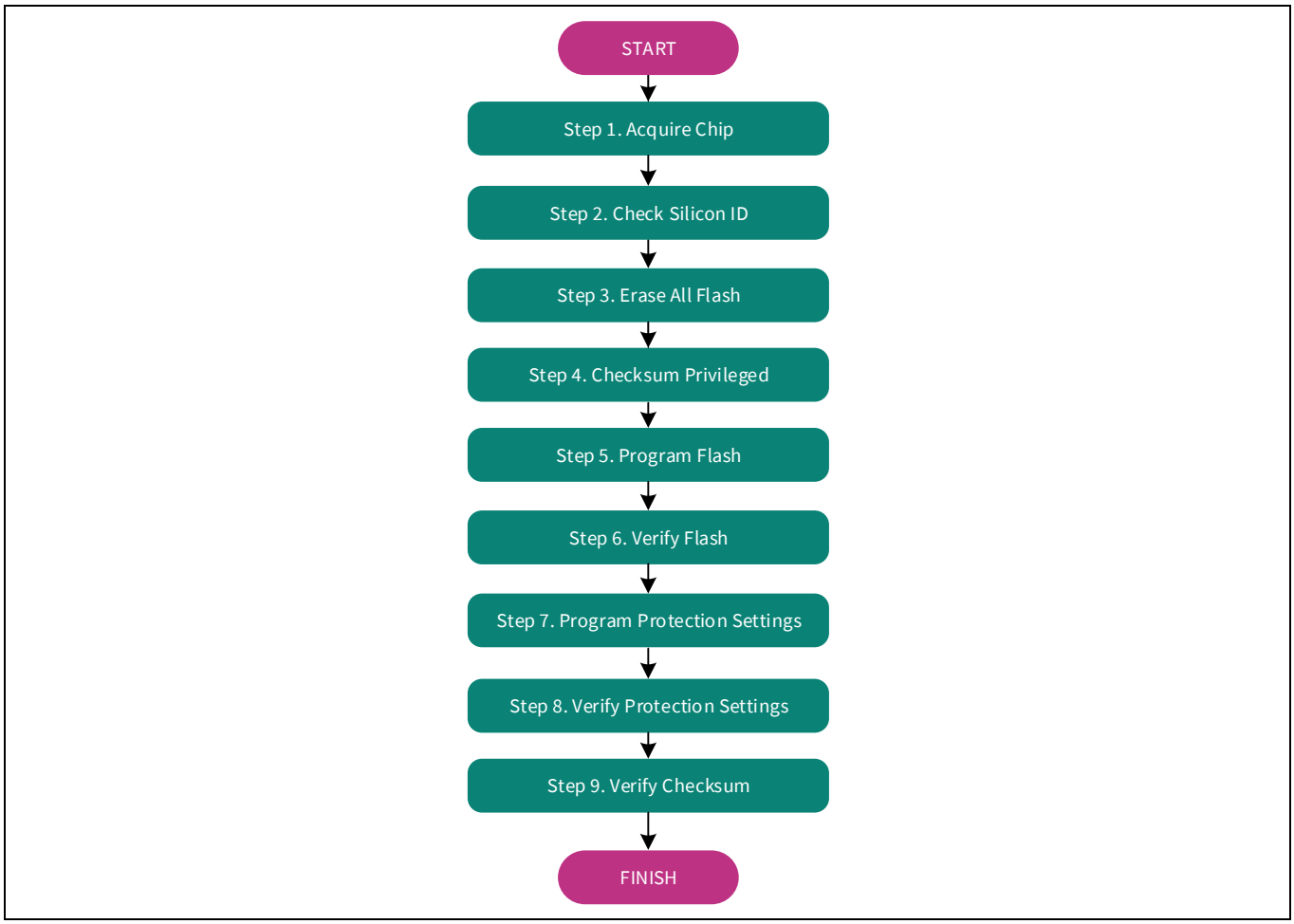

Figure 4-1. High-level programming flow of the target device

4.2 Subroutines used in the programming flow

Frequently used constants are named and the names are used in the pseudocode. **Table 4-1** lists the named constants.

The programming flow includes operations that are performed repeatedly. These operations are implemented as subroutines to keep the code easy to read. **Table 4-2** lists the subroutines.

Table 4-1. Constants used in the programming script

Constant name	Value	Description
Address space of CPU		
CPUSS_SYSREQ	See Table 1-1 in **"Target overview" on Page 4**	System request register used to make system requests to SROM code; system requests transition from User mode to Privileged mode
CPUSS_SYSARG		System request argument register, which may contain an argument, or a pointer to an array of arguments, depending upon the request.
TEST_MODE		Test Mode control register used to enter the chip into Programming mode (Test mode)
SRAM_PARAMS_BASE		SRAM address where the parameters for SROM requests are stored.
SFLASH_MACRO_0		Location of the flash protection settings in flash macro 0.
SFLASH_PROT_ADDR_INCR		Flash Protection Address Increment for Each Array
SFLASH_CPUSS_PROTECTION		Location of chip-level protection in the flash macro. Actual byte offset varies, but must read the whole 32-bit word.
SROM constants		
SROM_KEY1	0xB6	Parameter of SROM call
SROM_KEY2	0xD3	Parameter of SROM call
SROM_SYSREQ_BIT	0x80000000	Mask of SYSREQ bit in CPUSS_SYSREQ register, which starts the execution of the SROM command
SROM_PRIVILEGED_BIT	0x10000000	Mask of PRIVILEGED bit in CPUSS_SYSREQ register, which indicates whether the system is in Privileged mode (SROM command running) or User mode.
SROM_STATUS_SUCCEEDED	0xA0000000	Successful status of the system request (SROM command).
SROM requests		
SROM_CMD_GET_SILICON_ID	0x00	Reads the silicon ID of the target device.
SROM_CMD_LOAD_LATCH	0x04	Loads data into the volatile buffer (before writing into flash).
SROM_CMD_PROGRAM_ROW	0x06	Programs data into the flash row (from the volatile buffer).
SROM_CMD_ERASE_ALL	0x0A	Erases all the user's flash and flash protection settings from the supervisory rows.
SROM_CMD_CHECKSUM	0x0B	Verifies the checksums of all flash contents (user and privileged rows).

Table 4-1. Constants used in the programming script *(continued)*

Constant name	Value	Description
SROM_CMD_WRITE_PROTECTION	0x0D	Writes flash protection and chip-level protection.
SROM_CMD_SET_IMO_48_MHz	0x15	Sets 48 MHz clock for flash programming (not used for some targets, see pseudocode).
Chip-level protection		
CHIP_PROT_VIRGIN	0x00	VIRGIN mode, used by Infineon only. **WARNING: Setting the chip to VIRGIN mode renders the chip inoperable.**
CHIP_PROT_OPEN	0x01	OPEN mode, flash is not protected.
CHIP_PROT_PROTECTED	0x02	PROTECTED mode, can be set by the customer.
CHIP_PROT_KILL	0x04	KILL mode, can be set by the customer (irreversible).

Table 4-2. Subroutines used in programming flow

Subroutine	Description
`bool WriteIO(addr32, data32)`	Writes a 32-bit value into the specified address of the CPU address space. Returns “true” if all SWD transactions succeeded (ACKed).
`bool ReadIO(addr32, OUT data 32)`	Reads a 32-bit value from the specified address of the CPU address space. Note that the actual size of the read data (8, 16, 32 bits) depends on the setting in the DAP CSW register (see **Table 3-2**). By default, all accesses are 32 bits long. Returns “true” if all SWD transactions succeeded (ACKed).
`bool PollSROMStatus()`	Waits until the SROM command is complete and then checks its status. Timeout is 1 second. Returns “true” (success) if the command is completed and its status is successful; otherwise, returns “false”.

The implementation of these subroutines follows. It is based on the pseudocode and registers defined in **“Hardware access commands” on Page 11** and **“Pseudocode” on Page 13**. The code uses the constants defined in this chapter. The pseudocode is similar to C notation.

```
// WriteIO Subroutine
bool “WriteIO” (addr32, data32)
{
    ack1 = Write_DAP (TAR, addr32);
    ack2 = Write_DAP (DRW, data32);
    return (ack1 == 3’b001) && (ack2 == 3b’001);
}

// “ReadIO” Subroutine
bool ReadIO (addr32, OUT data32)
{
    ack1 = Write_DAP (TAR, addr32);
    ack2 = Read_DAP (DRW, OUT data32);
    ack3 = Read_DAP (DRW, OUT data32);
    return (ack1 == 3’b001) && (ack2 == 3b’001) && (ack3 == 3b’001);
}
```

Programming algorithm

```
// “PollSROMStatus” Subroutine
bool PollSROMStatus()
{
    do
    {
        ReadIO (CPUSS_SYSREQ, OUT status);
        Status &= (SROM_SYSREQ_BIT | SROM_PRIVILEGED_BIT);
    }while ((status != 0) && (time_elapsed < 1 sec));

    if (time_elapsed >= 1 sec ) return FAIL; // timeout

    ReadIO (CPUSS_SYSARG, OUT statusCode);
    if ((statusCode & 0xF0000000) != (SROM_STATUS_SUCCEEDED))
    {
        return FAIL; // SROM command failed
    }
    else return PASS; // SROM command succeeded
    }
}
```

4.3 Step 1A – Acquire chip after hard reset

There are two ways to acquire the target. The recommended approach is to generate a hard reset and then enter Test mode. **4.4 Step 1B – Acquire chip (alternate method)** describes an alternate approach when this recommended algorithm will not work.

To acquire the chip, first trigger a hard reset condition. The hard reset condition is generated by toggling either the XRES pin or the power supply to the device. The algorithm then sends the acquire sequence within a specified time window. This step has strict timing requirements that the host must meet to enter Test mode successfully.

In Test mode (or Programming mode) the CPU is controlled by the external programmer, which can also access other system resources such as SRAM and registers. This is the recommended method for third-party production programmers or any other general-purpose programmer.

Figure 4-2 shows the timing diagram for entering Test mode.

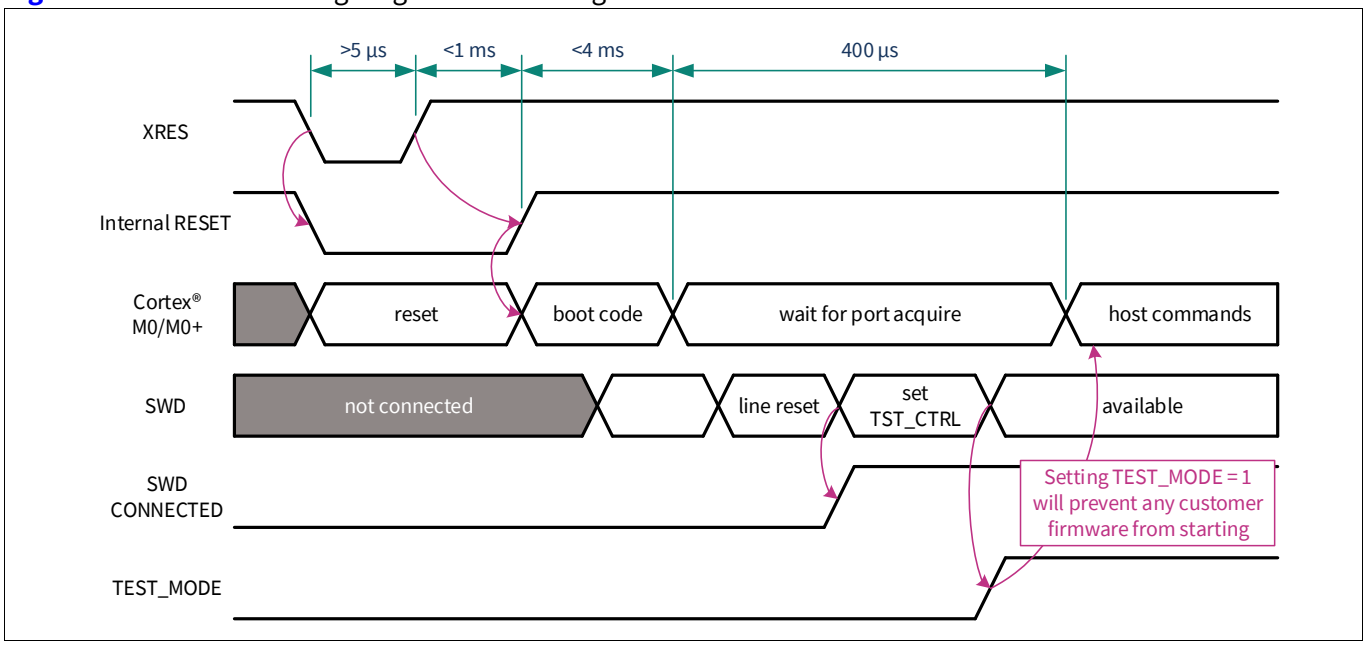

Figure 4-2. Timing diagram of entering test mode

This diagram details the chip’s internal signals while entering Test mode. Everything starts from toggling the XRES line (or applying power). The chip enters Internal Reset mode. After that, the system boot code starts

execution from the SROM. When completed, the CPU waits up to a 400 µs for a special connection sequence on the SWD port. If, during this time, the host sends the correct sequence of SWD commands, the CPU enters Test mode. Otherwise, it starts the execution of the user's code.

The duration of the internal reset (<1 ms) and boot code (<4 ms) are not specified exactly because they depend on the CPU clock and the size of the code. They can also vary in different revisions of the chip.

The recommended way to enter Test mode is to start sending an acquire sequence right after XRES is toggled (or power is supplied in Power Cycle mode). This sequence is sent iteratively until it succeeds; that is, all SWD transactions are ACKed and all conditions are met. **Figure 4-3** shows the implementation of the Acquire Chip procedure. It is detailed in terms of the SWD transaction. Note that the recommended minimum frequency of the programmer is 1.5 MHz, which meets the timing requirement of this step (400 µs).

Some targets require IMO to be set to 48 MHz for flash operations. See Table 1-1 in **"Target overview" on Page 4**, to see if this is required for your target.

Programming algorithm

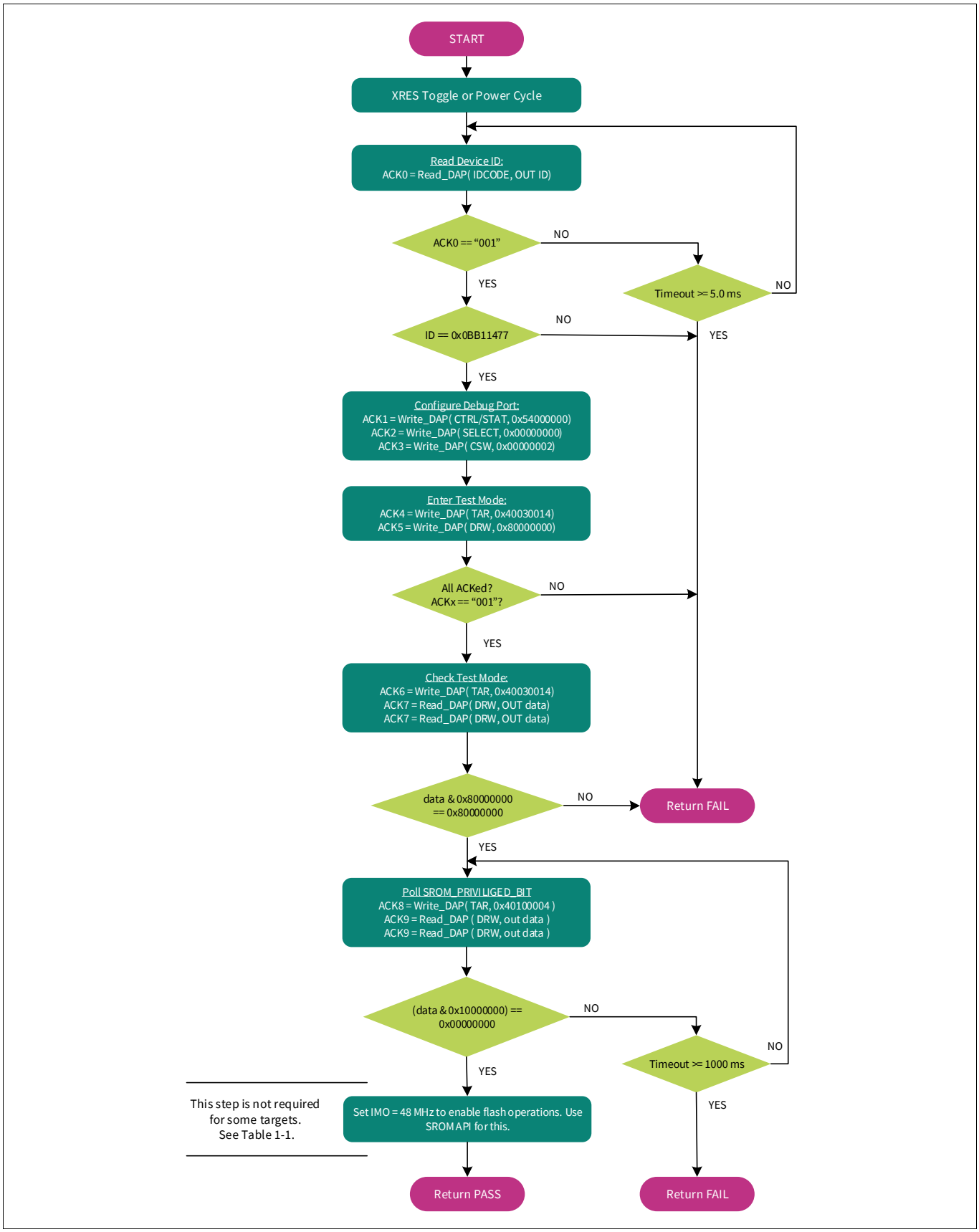

Figure 4-3. Flowchart of the "Acquire chip" step

4.3.1 Pseudocode: Step 1A – Acquire chip

```
//------------------------------------------------------------------------------
// Reset Target depending on acquire mode – Reset or Power Cycle
if (AcquireMode == “Reset”) ToggleXRES(); // Toggle XRES pin, target must be powered.
else if (AcquireMode == “Power Cycle”) PowerOn(); // Supply power to target.

// Execute Arm’s connection sequence – acquire SWD-port.
do
{
    SWD_LineReset();
    ack = Read_DAP ( IDCODE, out ID);
}while ((ack != 3b’001) && time_elapsed < 5.0 ms); //for PowerCycle timeout must be
                                                   //longer. For example ~30 ms.
if (time_elapsed >= 5.0 ms) return FAIL;

// The valid ID value for CM0+ is 0x0BC11477, adjust if necessary for your target
if (ID != 0x0BB11477) return FAIL; // SWD ID

// Initialize Debug Port
Write_DAP (CTRL/STAT, 0x54000000);
Write_DAP (SELECT, 0x00000000);
Write_DAP (CSW, 0x00000002);

// Enter CPU into Test Mode
WriteIO (TEST_MODE, 0x80000000); //Set test_mode bit in TEST_MODE reg from CPU space
ReadIO (TEST_MODE, out status);

if ((status & 0x80000000) != 0x80000000) return FAIL;

// Poll SROM_PRIVILEGED_BIT in CPUSS_SYSREQ register
do
{
    ReadIO (CPUSS_SYSREQ, out status);
    status &= SROM_PRIVILEGED_BIT;
} while ((status != 0x00000000) && time_elapsed < 1000 ms)

if (time_elapsed >= 1000 ms) return FAIL;

// The following SROM call is not required for some targets.
// Refer to Table 1-1 to determine whether this call is required for your device.

// Set "IMO = 48 MHz" to enable Erase/Program/Write Flash operations.
Params = (SROM_KEY1 << 0) +                          //KEY1
         ((SROM_KEY2+SROM_CMD_SET_IMO_48MHz) << 8); //KEY2

WriteIO (CPUSS_SYSARG,Params); //Write Params in CPUSS_SYSARG
WriteIO (CPUSS_SYSREQ, SROM_SYSREQ_BIT | SROM_CMD_SET_IMO_48MHz); // Request SROM call

status = PollSromStatus();
if (!status) return FAIL;
return PASS;
```

4.4 Step 1B – Acquire chip (alternate method)

There may be cases where the host programmer's hardware and software constraints prevent programming the device in Test mode. These constraints can include:

- Host programmer hardware cannot toggle the XRES pin or the power supply to the target device. Only the SWD protocol pins (SWDIO, SWDCLK) are available for programming.
- The host programmer software application cannot meet the timing requirements to enter test mode after triggering a hard reset condition. In such a scenario, the device enters the user code execution mode after the test mode timing window elapses.

For a host programmer with any of the above constraints, this section provides a modified acquire chip sequence that does not require XRES/power supply toggling, and which does not have the test mode timing requirements. Only the SWD protocol pins are used for programming. This alternate method only works under the following conditions:

- The SWD pins on the target device have not been repurposed. If the SWD pins are repurposed as part of the existing firmware image in flash memory, the SWD pins are not available for communication with the host SWD interface to update the existing firmware image.
- The chip protection mode of the existing firmware image in the device is set for OPEN mode.

Devices coming from the factory satisfy both the above listed conditions, and can be programmed using the modified acquire sequence listed in this section. If firmware previously programmed into the device does not meet any of the above conditions, then subsequent re-programming of the device is not possible using the modified acquire sequence. Because of this limitation, this method is not recommended for third-party programmers or general-purpose programmers, because they are required to support programming under all possible operating conditions.

4.4.1 Pseudocode: Step 1B – Acquire chip (alternate method)

```
//-----------------------------------------------------------------------------
// Execute SWD connect sequence.
// 100 ms time out below is worst case time out value
do
{
    SWD_LineReset();
    ack = Read_DAP(IDCODE, out ID);
} while((ack != 3b'001) && time_elapsed < 100 ms);

// The valid ID value can be either 0x0BB11477 (CM0) or 0x0BC11477 (CM0+)
if (((ID != 0x0BB11477) && (ID != 0x0BC11477)) || (time_elapsed >= 100 ms))
    return FAIL;

// Clear WDATAERR if any previous firmware upgrade operation was aborted in the middle
// and WDATAERR bit is set. This write is to the AP ABORT register in Debug Port
// (APnDP bit - 0, Address is 2'b00, Access - W for the AP ABORT register
Write_DAP (ABORT, 0x00000008);

//Set the CSYSPWRUPREQ (System power up request), CDBGPRWUPREQ (Debug power up request),
//CDBGRSTREQ (Debug reset request) bits in  DP_CTRLSTAT register
Write_DAP (CTRL/STAT, 0x54000000);

// Set the AP register bank selection
Write_DAP (SELECT, 0x00000000);

// Set the register access as word (4-byte) access
// For devices with CM0+ CPU, the HPROT[1] bit also needs to be set along with few
// other bit fields
if (ID == 0x0BC11477)
{
    // CM0+ CPU CSW configuration
```

Programming algorithm

```
    Write_DAP (CSW, 0x03000042);
}
else
{
    // CM0 CPU CSW configuration
    Write_DAP (CSW, 0x00000002);
}

// Enable debug, and halt the CPU
WriteIO (0xE000EDF0, 0xA05F0003);

// Verify the debug enable, cpu halt bits are set
ReadIO (0xE000EDF0, out status);
if ((status & 0x00000003) != 0x00000003)
    return FAIL;

// Enable Breakpoint unit
WriteIO (0xE0002000, 0x00000003);

// Get address at reset vector
ReadIO (0x00000004, out reset_address);

// Map the address bits to the breakpoint compare register
// bit map, set the enable breakpoint bit, and the match bits
reset_address = (reset_address & 0x1FFFFFFC) | 0xC0000001;

//Update the breakpoint compare register
WriteIO (0xE0002008, reset_address);

// Issue software reset
WriteIO (0xE000ED0C, 0x05FA0004);

// Sufficient delay after reset for boot process
Delay(5 ms);

// Repeat a portion of the acquire sequence again
do
{
    SWD_LineReset();
    ack = Read_DAP(IDCODE, out ID);
} while ((ack != 3b'001) && time_elapsed < 100 ms);

if (((ID != 0x0BB11477) && (ID != 0x0BC11477))||(time_elapsed >= 100 ms))
    return FAIL;

Write_DAP (CTRL/STAT, 0x54000000);
Write_DAP (SELECT, 0x00000000);

if (ID == 0x0BC11477)
{
    Write_DAP (CSW, 0x03000042);
}
else
{
    Write_DAP (CSW, 0x00000002);
}

// Verify the debug enable, cpu halt bits are set
ReadIO (0xE000EDF0, out status);
if ((status & 0x00000003) != 0x00000003)
    return FAIL;

// Load infinite for loop code in SRAM address 0x20000300
```

Programming algorithm

```
WriteIO (0x20000300, 0xE7FEE7FE);

// Load PC with address of infinite for loop SRAM address with thumb bit (bit 0) set
WriteIO (0xE000EDF8, 0x20000301);
WriteIO (0xE000EDF4, 0x0001000F);

// Load SP with top of SRAM address - Set for minimum SRAM size devices (2 KB size)
WriteIO (0xE000EDF8, 0x20000800);
WriteIO (0xE000EDF4, 0x00010011);

// Read xPSR register, set the thumb bit, and restore modified value to xPSR register
WriteIO (0xE000EDF4, 0x00000010);
ReadIO (0xE000EDF8, out psr_reg_val);
psr_reg_val = psr_reg_val | 0x01000000;
WriteIO (0xE000EDF8, psr_reg_val);
WriteIO (0xE000EDF4, 0x00010010);

// Disable Breakpoint unit
WriteIO (0xE0002000, 0x00000002);

// Unhalt CPU
WriteIO (0xE000EDF0, 0xA05F0001);

// The following SROM call is not required for some targets.
// Refer to Table 1-1 to determine whether this call is required for your device.

// Set "IMO = 48 MHz" to enable Erase/Program/Write Flash operations.
Params = (SROM_KEY1 << 0) + //KEY1
         ((SROM_KEY2+SROM_CMD_SET_IMO_48MHz) << 8); //KEY2

// Write Params in CPUSS_SYSARG
WriteIO (CPUSS_SYSARG,Params);
WriteIO (CPUSS_SYSREQ, SROM_SYSREQ_BIT | SROM_CMD_SET_IMO_48MHz); // Request SROM call

status = PollSromStatus();
if (!status) return FAIL;

return PASS;
//-------------------------------------------------------------------------------
```

After completing the programming steps from "Acquire Chip" until the programming/verification of nonvolatile memory, the device is usually reset to start execution of the programmed firmware. If the host is unable to toggle the XRES pin or power pin to the target device to perform a reset, a software reset can be triggered by the host through the SWD interface as given below. This should be done at the end of programming operation.

```
// Issue software reset
WriteIO (0xE000ED0C, 0x05FA0004);
```

4.5 Step 2 – Check silicon ID

After acquiring the device, this step verifies that the device corresponds to the hex file. It reads the silicon ID from the hex file and compares it with the ID obtained from the target.

The silicon ID consists of four bytes:

- High byte of the silicon ID
- Low byte of the silicon ID
- Revision ID (not relevant to device programming)
- Family ID

If your algorithm must distinguish these targets, modify the pseudocode in this step to accommodate this exception.

4.5.1 Pseudocode: Step 2 – Check silicon ID

```
//--------------------------------------------------------------------------------
// Read “Silicon ID” from hex file, 4 bytes from address 0x9050 0002 (big endian):
// HexID[0] - Silicon ID Hi
// HexID[1] - Silicon ID Lo
// HexID[2] - Revision ID
// HexID[3] - Family ID
// HEX_ReadSiliconID() must be implemented.

HexID = HEX_ReadSiliconID();

// Read “Silicon ID” from the target using SROM request
Params = (SROM_KEY1 << 0) +                          //KEY1
         ((SROM_KEY2+SROM_CMD_GET_SILICON_ID) << 8); //KEY2

WriteIO (CPUSS_SYSARG, Params); // Write parameters in CPUSS_SYSART
WriteIO (CPUSS_SYSREQ, SROM_SYSREQ_BIT | SROM_CMD_GET_SILICON_ID); // Request SROM call
status = PollSromStatus();
if (!status) return FAIL;

// Read 32-bit ID from the registers
// CPUSS_SYSARG[7:0]   - Silicon ID Lo
// CPUSS_SYSARG[15:8]  - Silicon ID Hi
// CPUSS_SYSARG[23:16] - Revision ID
// CPUSS_SYSREQ[11:0]  - Family ID
ReadIO (CPUSS_SYSARG, out part0);
ReadIO (CPUSS_SYSREQ, out part1);

siliconID[0] = (part0 >> 8) & 0xFF; // Silicon ID Hi
siliconID[1] = (part0 >> 0) & 0xFF; // Silicon ID Lo
siliconID[2] = (part0 >> 16)& 0xFF; // Revision ID
siliconID[3] = (part1 >> 0) & 0xFF; // Family ID

// Compare IDs from the hex and from the target
for (i = 0; i < 4; i++)
{
    if (i == 1) continue;
    if (i == 2) continue;
    if (siliconID[i] != hexID[i] ) return FAIL;
}
return PASS;
```

4.6 Step 3 – Erase all flash

Flash must be erased before programming. This step erases all user rows and the corresponding flash protection. If chip-level protection is in PROTECTED mode, this step moves it to OPEN. See **Appendix A: Chip-level protection on page 42**. **Figure 4-4** shows the algorithm of the Erase All step.

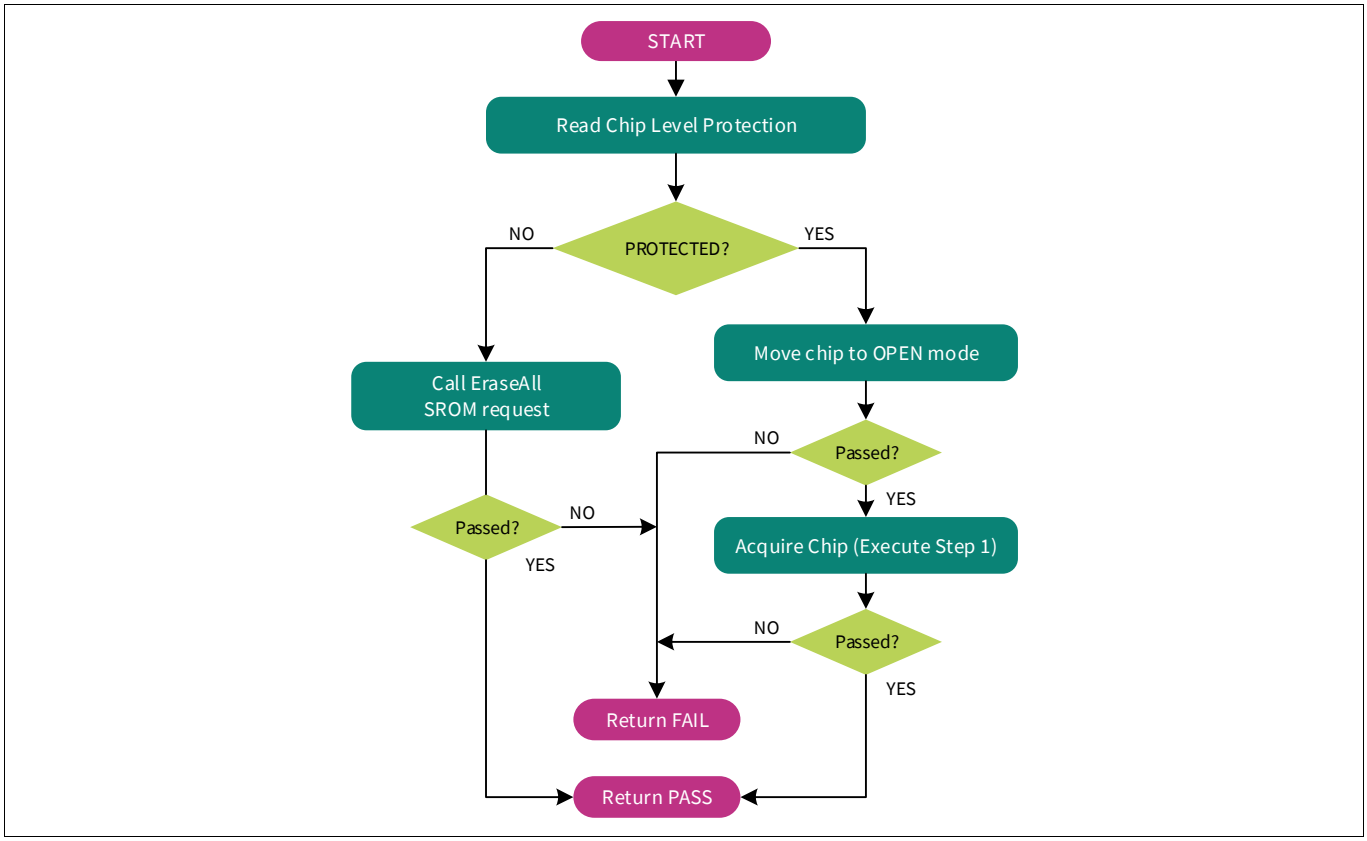

Figure 4-4. Flowchart of the "Erase all" step

4.6.1 Pseudocode: Step 3 – Erase all flash

```
//-------------------------------------------------------------------------------
// Read Chip Level Protection using SROM call
// Check current protection mode
if (chipProt == CHIP_PROT_PROTECTED) // PROTECTED
{
    // Move chip to OPEN mode
    Params = (SROM_KEY1 << 0) +                                    // KEY1
             ((SROM_KEY2 + SROM_CMD_WRITE_PROTECTION) << 8) +      // KEY2
             (0x01 << 16) +                                        // OPEN mode
             (0x00 << 24);                                         // Flash Macro 0

    WriteIO (CPUSS_SYSARG, Params);     // Write params in CPUSS_SYSARG
    WriteIO (CPUSS_SYSREQ, SROM_SYSREQ_BIT | SROM_CMD_WRITE_PROTECTION);

    status = PollSromStatus();
    if (!status) return FAIL;

    // Changing from PROTECTED state also erases all Flash.
    // Now re-acquire the chip in OPEN mode (Step 1 - Acquire Chip) and check the result.
    if (!status) return FAIL;
}

else // OPEN (CHIP_PROT_OPEN)
```

```
{
    Params = (SROM_KEY1 << 0) +                          // KEY1
             ((SROM_KEY2+SROM_CMD_ERASE_ALL) << 8);      // KEY2

    WriteIO (SRAM_PARAMS_BASE + 0x00, Params); // Write params in SRAM
    WriteIO (CPUSS_SYSARG, SRAM_PARAMS_BASE);  // Set location of parameters
    WriteIO (CPUSS_SYSREQ, SROM_SYSREQ_BIT | SROM_CMD_ERASE_ALL); // Request SROM call

    status = PollSromStatus();
    if (!status) return FAIL;
}
return PASS;
//-------------------------------------------------------------------------------
```

4.7 Step 4 – Checksum privileged

After the user's flash is erased, calculate the checksum of the privileged rows. The Checksum(All) method calculates the checksum of the combined privileged rows and user rows. After the user's flash is erased, its checksum must be 0x00. At this point the checksum method generates the checksum of the privileged rows only.

“Step 9 – Verify checksum” on Page 40 uses this privileged checksum to calculate the users flash checksum. That checksum is calculated according to the following formula:

Checksum_User = Checksum_Step_9 – Checksum_Step_4

An alternate approach to avoid this step is to calculate the checksum of each row individually and add them. However, this alternate method takes much longer.

4.7.1 Pseudocode: Step 4 – Checksum privileged

```
//-------------------------------------------------------------------------------
Params = (SROM_KEY1 << 0) +                     // KEY1
         ((SROM_KEY2+SROM_CMD_CHECKSUM) << 8)+ // KEY2
         ((0x0000 & 0x00FF) << 16) +           // Row ID[7:0]
         ((0x8000 & 0xFF00) << 16);            // Row ID[15:8] – Checksum All(0x8000)

WriteIO (CPUSS_SYSARG, Params); // Write params in CPUSS_SYSARG
WriteIO (CPUSS_SYSREQ, SROM_SYSREQ_BIT | SROM_CMD_CHECKSUM); // Request SROM call

status = PollSromStatus();
if (!status) return FAIL;

// Read Checksum from CPUSS_SYSARG register
ReadIO (CPUSS_SYSARG, out checksum_all);
Checksum_Privileged = (checksum_all & 0x0FFFFFFF); //28-bit checksum

return PASS;
//-------------------------------------------------------------------------------
```

4.8 Step 5 – Program flash

Flash memory is programmed in rows. The programmer must serially program each row individually. The source data is extracted from the hex file starting from address 0x00000000 (see **Figure 2-2**).

Flash size, row size, and number of rows per macro vary per target. See Table 1-1 in **"Target overview" on Page 4**, and consult the datasheet for your target.

These values are input parameters in this step. Note that the flash size of the acquired silicon must be equal to the size of the user's code in the hex file, as verified in Step 2 by comparing the silicon IDs of the hex and the target.

During programming, two SROM APIs are used:

- SROM_CMD_LOAD_LATCH – Loads the flash row into the silicon's volatile buffer.
- SROM_CMD_PROGRAM_ROW – Programs the row into flash (from the volatile buffer).

Figure 4-5 illustrates this programming algorithm.

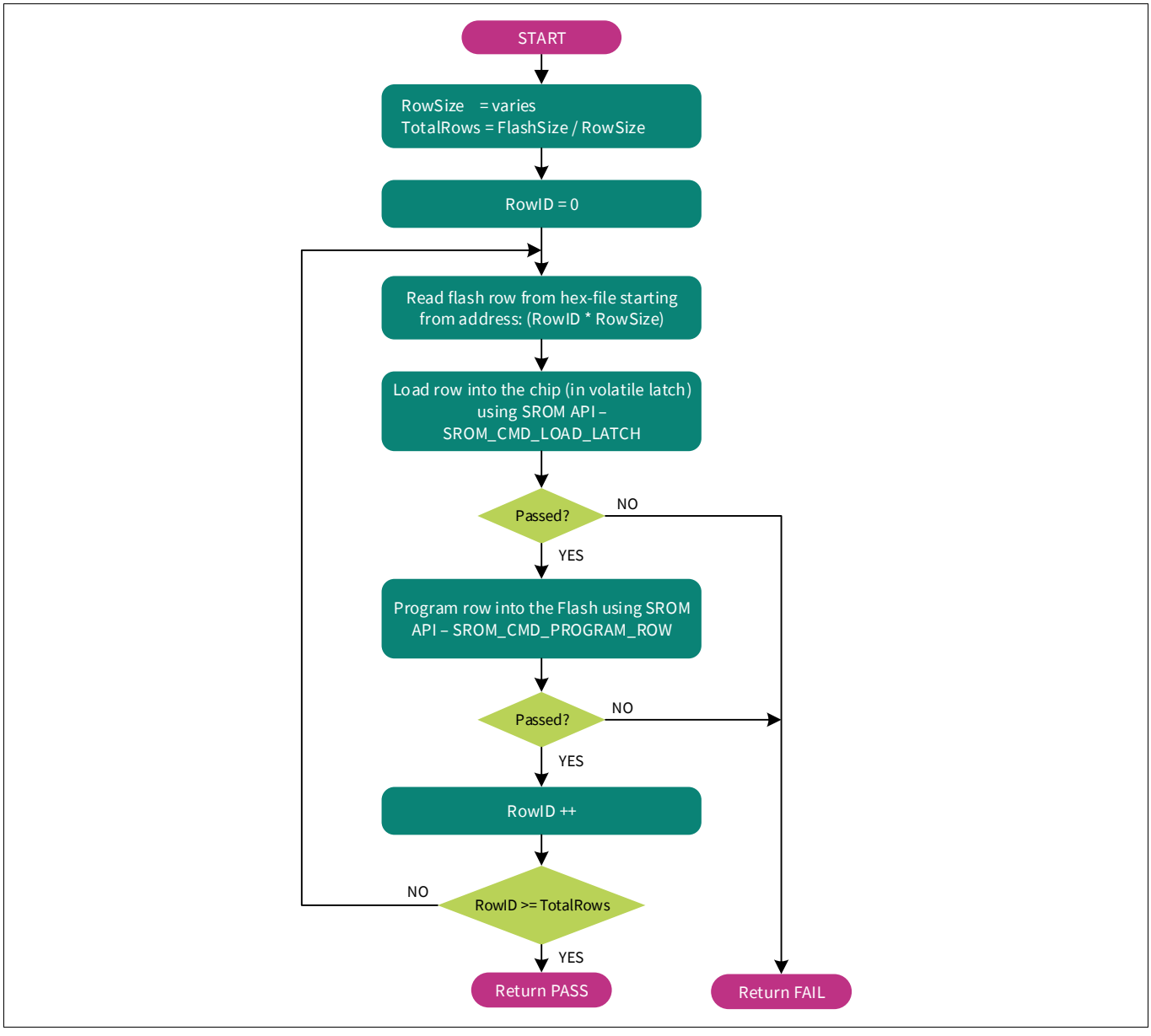

Figure 4-5. Flowchart of the "Program flash" step

4.8.1 Pseudocode: Step 5 – Program flash

```
//--------------------------------------------------------------------------------
// Flash Size, Row Size, and Rows per Macro must be provided, and vary per target
// FlashSize = 0;
// RowSize = 0;
// RowsPerMacro =  0;
// some targets have only macro 0

TotalRows = FlashSize / RowSize;

// Program all flash rows
for (int RowID = 0; RowID < TotalRows; RowID++)
{
    // 1. Read Row data from hex
    RowHexAddress = RowSize * RowID;

    // Extract row from the hex-file address "RowHexAddress" into buffer "Data"
    // HEX_ReadData() must be implemented by Programmer.
    Data = HEX_ReadData (RowHexAddress, RowSize);

    // 2. Program a row
    // Look for the data pattern that causes the SROM API issue
    // (a non-empty row can be skipped during programming)
    Checksum = 0;
    Bits = 0;
    for (i = 0; i < RowSize; i += 4)
    {
        Data32 = (Data[i+3] << 24) + (Data[i + 2] << 16) +
                 (Data[i + 1] << 8) + (Data[i + 0] << 0);
        Checksum += Data32;
        Bits |= Data32;
    }

}
return PASS;

//--------------------------------------------------------------------------------
// Implementation of ProgramRow()
bool ProgramRow (int RowID, byte[] Data, int RowSize)
{
    // Load Row to volatile buffer (latch)
    MacroID = floor (RowID / RowsPerMacro); // Round down to integer

    Params1 = (SROM_KEY1 << 0) +                          // KEY1
              (SROM_KEY2 + SROM_CMD_LOAD_LATCH) << 8) + // KEY2
              (0x00 << 16) +     // Byte number in latch from what to write
              (MacroID << 24);   // Flash Macro ID (0 or 1)

    Params2 = (RowSize - 1); // Number of Bytes to load minus 1

    WriteIO (SRAM_PARAMS_BASE + 0x00, Params1); // Write params in SRAM
    WriteIO (SRAM_PARAMS_BASE + 0x04, Params2); // Write params in SRAM

    // Put row data into SRAM buffer
    for (i = 0; i < RowSize; i += 4)
    {
        Params1 = (Data[i] << 0) + (Data[i + 1] << 8) +
                  {Data[i + 2] << 16) + (Data[i + 3] << 24);
        WriteIO (SRAM_PARAMS_BASE + 0x08 + i, Params1); // Write params in SRAM
    }

    // Call "Load Latch" SROM API
    WriteIO (CPUSS_SYSARG, SRAM_PARAMS_BASE); // Set location of parameters
```

Programming algorithm

```
    WriteIO (CPUSS_SYSREQ, SROM_SYSREQ_BIT | SROM_CMD_LOAD_LATCH); // SROM operation

    Status = PollSromStatus();
    if (!Status) return FAIL;
    // Program Row - call SROM API
    Params = (SROM_KEY1 << 0) +                          // KEY1
             ((SROM_KEY2+SROM_CMD_PROGRAM_ROW) << 8) + // KEY2
             ((RowID & 0x00FF) << 16) +                  // ROW_ID_LOW[7:0]
             ((RowID & 0xFF00) << 16);                   // ROW_ID_HIGH[15:8]

    WriteIO (SRAM_PARAMS_BASE+0x00, Params);     // Write params in SRAM
    WriteIO (CPUSS_SYSARG, SRAM_PARAMS_BASE);    // Set location of parameters
     WriteIO (CPUSS_SYSREQ, SROM_SYSREQ_BIT | SROM_CMD_PROGRAM_ROW); // SROM operation

    Status = PollSromStatus();
    if (!Status) return FAIL;
    return PASS;
}
//------------------------------------------------------------------------------
```

4.9 Step 6 – Verify flash

Because the checksum is verified eventually, this step is optional. Keep it in the programming flow for higher reliability. The checksum cannot completely guarantee that the content was written without errors.

During verification, the programmer reads a row from flash and the corresponding data from the hex file and compares them. If any difference is found, the programmer must stop and return a failure. Each row must be considered.

Reading from the flash is achieved by direct access to the memory space of the CPU. No SROM API is required; simply read from the flash address starting at 0x00000000.

Figure 4-6 illustrates the verification algorithm.

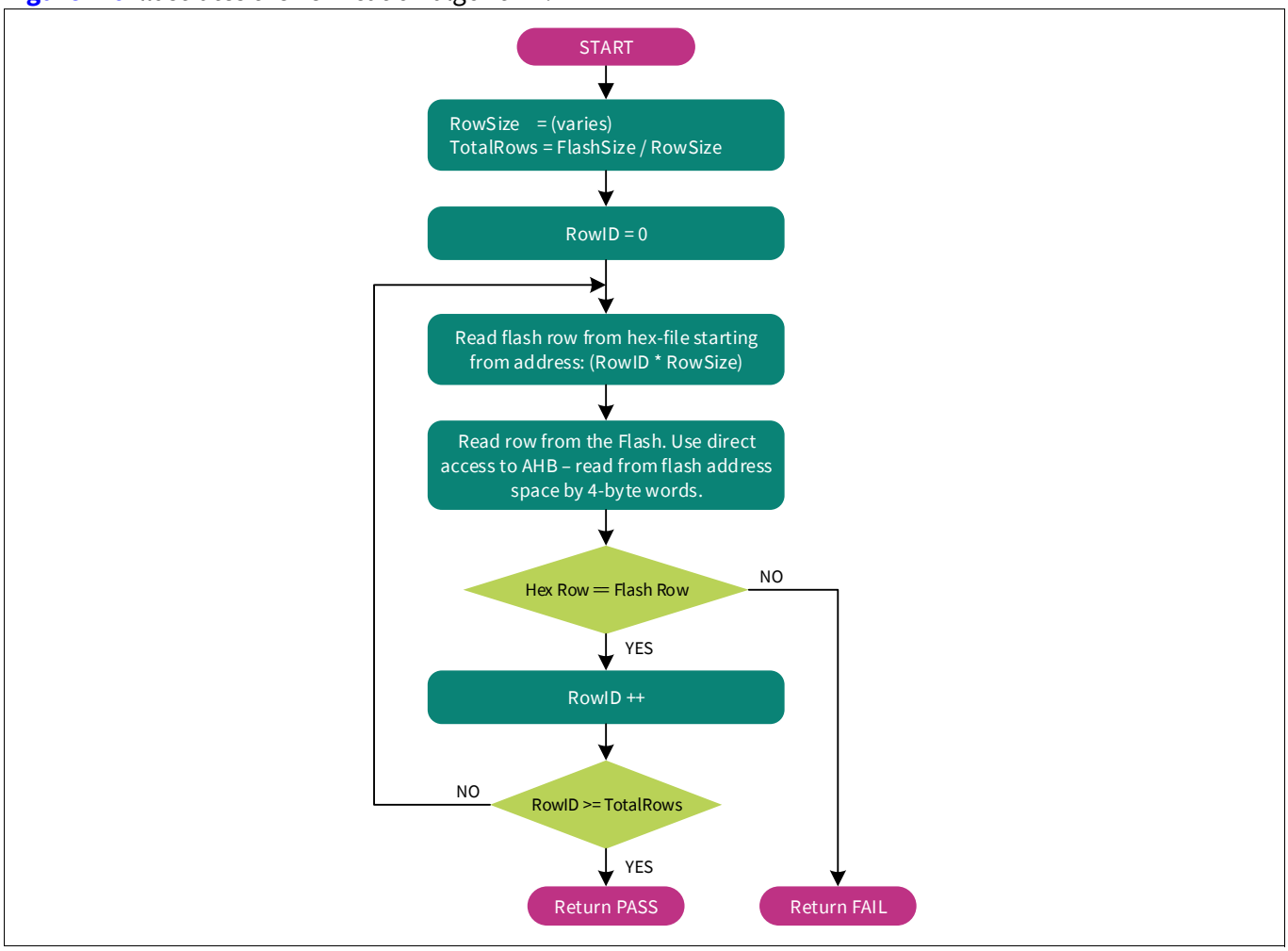

Figure 4-6. Flowchart of the "Verify flash" step

4.9.1 Pseudocode: Step 6 – Verify flash

```
//--------------------------------------------------------------------------------
// FlashSize and RowSize must be provided.
// FlashSize = 0; // varies per target
// RowSize = 0;   // varies per target

TotalRows = FlashSize / RowSize;

// Read and Verify Flash rows
for (int RowID = 0; RowID < TotalRows; RowID++)
{
    // 1. Read row from hex file
    RowAddress = rowSize * rowID; //liner address of row in flash

    // Extract row from the hex-file address into buffer "hexData"
    // HEX_ReadData() must be implemented by Programmer
    hexData = HEX_ReadData(RowAddress, RowSize);

    // 2. Read row from chip
    for (i = 0; i < RowSize; i += 4)
    {
        // Read flash via AHB-interface
        ReadIO (RowAddress + i, out data32);
        chipData[i + 0] = (data32 >> 0) & 0xFF;
        chipData[i + 1] = (data32 >> 8) & 0xFF;
        chipData[i + 2] = (data32 >> 16) & 0xFF;
        chipData[i + 3] = (data32 >> 24) & 0xFF;
    }

    // 3. Compare them
    for (i = 0; i < RowSize; i++)
    {
        if (chipData[i] != hexData[i]) return FAIL;
    }
}
return PASS;
//--------------------------------------------------------------------------------
```

4.10 Step 7 – Program protection settings

At this point, the programmer writes into the supervisory flash all protection data: row-level protection and chip-level protection. For more information, see **Figure 2-1**.

Flash size, row size, rows per macro, the number of macros, and the address range of protection data can vary per target. See Table 1-1 in **"Target overview" on Page 4** and the datasheet for your target. For example the target device may have two flash macros, each with its own supervisory rows to store the protection settings of the user's rows. If your target has only one macro, it is considered macro 0 for purposes of this algorithm.

Each user row occupies one bit in the protection space: 0 means unprotected; 1 means protected. This provides write/erase protection for the row. In the PROTECTED state, a row cannot be erased or written either by the firmware or by an external programmer. The protection setting can be reset only by the EraseAll() operation in Step 3, driven by the external programmer.

Chip-level protection is only 1 byte and is stored in the supervisory row of macro 0 where the flash protection data resides.

Figure 4-7 shows the algorithm for writing protection settings. It assumes the target has two macros.

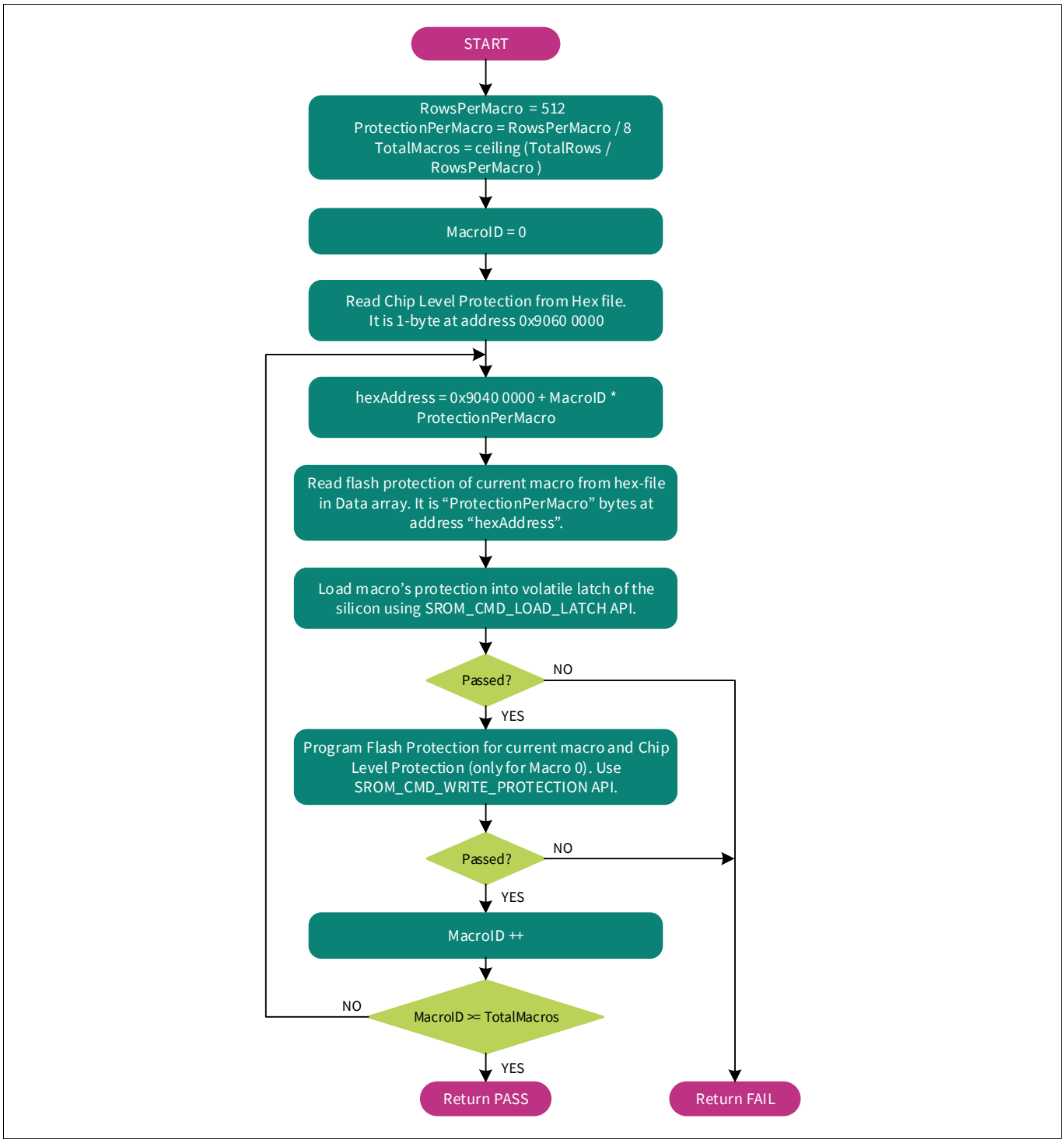

Figure 4-7. Flowchart of the “Program protection settings” step

4.10.1 Pseudocode: Step 7 – Program protection settings

```
//------------------------------------------------------------------------------
// FlashSize, RowSize, and RowsPerMacro must be provided, and vary per target
// FlashSize = 0;
// RowSize = 0;
// RowsPerMacro =  0;
// Some targets have only macro 0

TotalRows = FlashSize / RowSize;
TotalMacros = ceiling (TotalRows / RowsPerMacro); // round up to integer
ProtectionPerMacro = RowsPerMacro / 8; // number of bytes, one bit per row

// 1. Read Chip Level Protection from hex-file. It is 1 byte at address 0x90600000.
//    HEX_ReadChipLevelProtection() must be implemented.
ChipLevelProtection = HEX_ReadChipLevelProtection();

for (MacroID = 0; MacroID < TotalMacros; MacroID++)
{
    // 2. Read Protection settings of current macro from hex-file.
    //    It is located at 0x9040 0000 + MacroID * ProtectionPerMacro
    //    HEX_ReadRowProtection() must be implemented by Programmer.

    HexAddr = 0x9040000 + MacroID * ProtectionPerMacro;
    Data = HEX_ReadRowProtection(HexAddr, ProtectionPerMacro);

    // 3. Load protection setting of current macro into volatile latch.
    //    This is same implementation as the “Program Flash” step.
    //    So this code can be moved into a separate routine – “LoadLatch(MacroID, Data)”
    Params1 = (SROM_KEY1 << 0) +                          // KEY1
              ((SROM_KEY2 + SROM_CMD_LOAD_LATCH) << 8) + // KEY2
              (0x00 << 16) +   // Byte number in latch from what to write
              (MacroID << 24); // Flash Macro ID (0, 1, ...)
    Params2 = (ProtectionPerMacro - 1); //Number of Bytes to load minus 1

    WriteIO (SRAM_PARAMS_BASE + 0x00, Params1); //Write params in SRAM
    WriteIO (SRAM_PARAMS_BASE + 0x04, Params2); //Write params in SRAM

    // Put row data into SRAM buffer
    for (i = 0; i < ProtectionPerMacro; i += 4)
    {
        Params1 = (Data[i] << 0) + (Data[i + 1] << 8) +
                  (Data[i + 2] << 16) + (Data[i + 3] << 24);
        WriteIO (SRAM_PARAMS_BASE + 0x08 + i, Params1);// Write params in SRAM
    }

    // Call "Load Latch" SROM API
    WriteIO (CPUSS_SYSARG, SRAM_PARAMS_BASE); // Set location of parameters
    WriteIO (CPUSS_SYSREQ, SROM_SYSREQ_BIT | SROM_CMD_LOAD_LATCH); // Request SROM call
    Status = PollSromStatus();
    if (!Status) return FAIL;

    // 4. Program protection setting of current macro into supervisory row.
    Params = (SROM_KEY1 << 0) +                              // KEY1
             ((SROM_KEY2 + SROM_CMD_WRITE_PROTECTION) << 8) + // KEY2
             (ChipLevelProtection << 16) + // Applicable only for Macro 0
             (MacroID << 24);              // Flash Macro

    WriteIO (CPUSS_SYSARG, Params);
    WriteIO (CPUSS_SYSREQ, SROM_SYSREQ_BIT | SROM_CMD_WRITE_PROTECTION);

    // Read status of the operation
    Status = PollSromStatus();
    if (!Status)) return FAIL;
```

```
}
return PASS;
//-------------------------------------------------------------------------
```

4.11 Step 8 – Verify protection settings

This step verifies the data that was written in Step 7. Simply read back the details of flash protection and chip-level protection from the silicon and compare this with the corresponding data from the hex file. Although this step is optional, it is recommended that you implement it in the programmer.

Flash size, row size, rows per macro, the number of macros, and the address range of protection data can vary per target. See Table 1-1 in **“Target overview” on Page 4** and the datasheet for your target. For example the target device may have two flash macros, each with its own supervisory rows to store the protection settings of the user’s rows. If your target has only one macro, it is considered macro 0 for purposes of this algorithm.

Read the protection setting by directly accessing the memory space of the CPU (via AHB). The programmer reads out the data in 4-byte words.

Note that when a chip-level protection byte is read from the silicon, it must be reviewed. In OPEN and VIRGIN modes, the value written in the supervisory rows is inverted when stored in Flash. (See **Appendix A: Chip-level protection on page 42**). For KILL and PROTECTED modes, no translation is necessary.

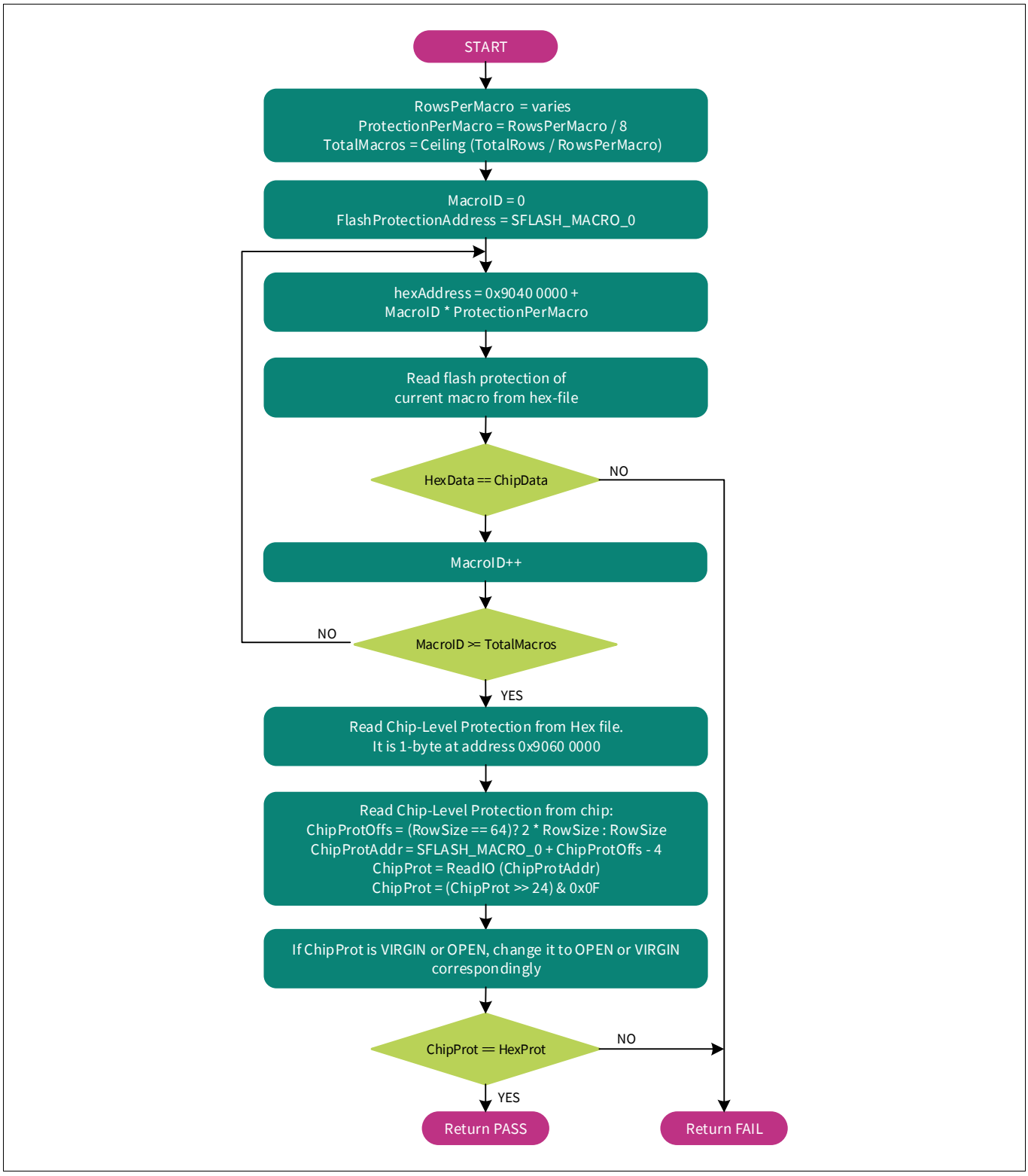

Figure 4-8. Flowchart of the "Verify protection settings" step

4.11.1 Pseudocode: Step 8 – Verify protection settings

```
//------------------------------------------------------------------------------
// FlashSize, RowSize, and RowsPerMacro must be provided and vary per target
// FlashSize = 0;
// RowSize = 0;
// RowsPerMacro =  0;
// Some targets have only macro 0;

TotalRows = FlashSize / RowSize;
TotalMacros = ceiling (TotalRows / RowsPerMacro); // round up to integer
ProtectionPerMacro = RowsPerMacro / 8; // number of bytes, one bit per row

FlashProtectionAddress = SFLASH_MACRO_0;

for (MacroID = 0; MacroID < TotalMacros; MacroID++)
{
    // 1. Read Protection settings of current macro from hex-file.
    //    It is located at address 0x9040 0000.
    //    HEX_ReadRowProtection() must be implemented.

    HexAddr = 0x9040000 + MacroID * ProtectionPerMacro;
    hexProt = HEX_ReadRowProtection(HexAddr, ProtectionPerMacro);

    // 2. Read Protection of current macro from silicon
    for (i = 0; i<ProtectionPerMacro; i += 4)
    {
        ReadIO(FlashProtectionAddress + i, out data32);
        flashProt[i + 0] = (data32 >> 0) & 0xFF;
        flashProt[i + 1] = (data32 >> 8) & 0xFF;
        flashProt[i + 2] = (data32 >> 16) & 0xFF;
        flashProt[i + 3] = (data32 >> 24) & 0xFF;
    }

    // 3. Compare hex and silicon's data
    for (i = 0; i<ProtectionPerMacro; i++ )
    {
        if (hexProt[i] != flashProt[i]) return FAIL;
    }
    FlashProtectionAddress+=SFLASH_PROT_ADDR_INCR
}

// 4. Read Chip Level Protection from hex-file. It is 1 byte at address 0x90600000.
//    HEX_ReadChipLevelProtection() must be implemented.
Hex_ChipLevelProtection = HEX_ReadChipLevelProtection();

// 5. Read Chip Level Protection from the silicon
// For devices with 64 bytes per row (Sil. ID range == 0Axxxx9A),
//   it is the last byte in 2nd SFlash row.
// For devices with 128 or 256 bytes per row,
//   it is the last byte in flash security row (first SFlash row in Macro 0).

if (RowSize == 64) ChipProtAddr = SFLASH_MACRO_0 + 2 * RowSize - 4;

else ChipProtAddr = SFLASH_MACRO_0 + RowSize - 4;
```

```
ReadIO(ChipProtAddr, out Chip_ChipLevelProtection);
Chip_ChipLevelProtection = (Chip_ChipLevelProtection>> 24) & 0x0F;

if (Chip_ChipLevelProtection == CHIP_PROT_VIRGIN) Chip_ChipLevelProtection =
CHIP_PROT_OPEN;

else
if (Chip_ChipLevelProtection == CHIP_PROT_OPEN) Chip_ChipLevelProtection =
CHIP_PROT_VIRGIN;

// 6. Compare hex's and silicon's data
if (Chip_ChipLevelProtection != Hex_ChipLevelProtection) return FAIL;

return PASS;
//-------------------------------------------------------------------------------
```

4.12 Step 9 – Verify checksum

This step validates the result of the flash programming process. It calculates the checksum of the user rows written in Step 5 and compares this value with the 2-byte checksum from the hex file. The Checksum SROM API computes the checksum of the combined user and privileged rows. To find the checksum of only the user rows, subtract the checksum of the privileged rows calculated in Step 4. **Figure 4-9** shows the final checksum algorithm. This is a mandatory step in the programming flow, although the checksum operation cannot completely guarantee that the data is written correctly. For this reason, **4.9 Step 6 – Verify flash** is also recommended.

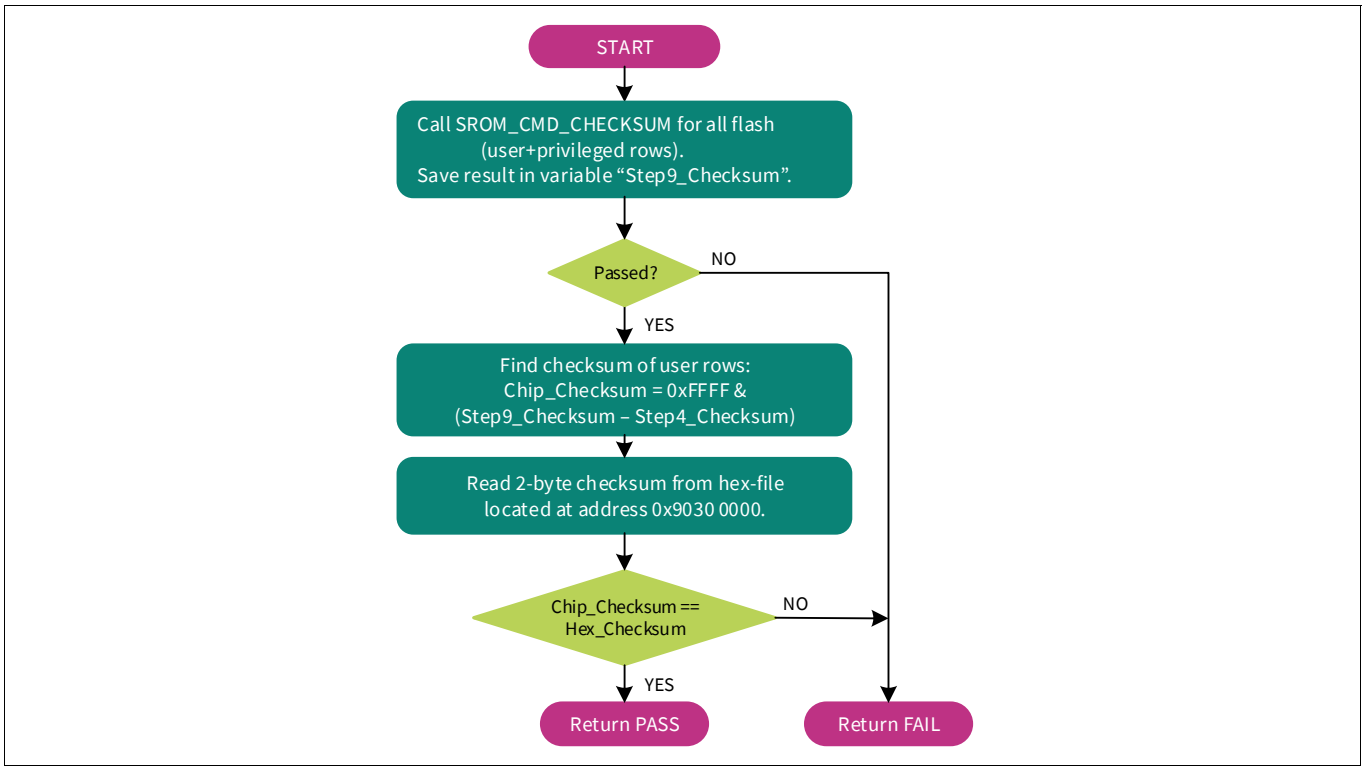

Figure 4-9. Flowchart of the “Verify checksum” step

4.12.1 Pseudocode: Step 9 – Verify checksum

```
//------------------------------------------------------------------------------
// Checksum of Privileged rows must be taken from Step 4.
// SROM call here is identical to Step 4, so it could be refactored into a subroutine.

// 1. SROM call - Checksum All
Params = (SROM_KEY1 << 0) + // KEY1
         ((SROM_KEY2+SROM_CMD_CHECKSUM) << 8)+ // KEY2
         ((0x0000 & 0x00FF) << 16) + // Row ID[7:0]
         ((0x8000 & 0xFF00) << 16);  // Row ID[15:8] - Checksum All(0x8000)

WriteIO (CPUSS_SYSARG, Params); // Write params in CPUSS_SYSARG
WriteIO (CPUSS_SYSREQ, SROM_SYSREQ_BIT | SROM_CMD_CHECKSUM); // Request SROM call

status = PollSromStatus();
if (!status) return FAIL;

// Read Checksum from CPUSS_SYSARG register
ReadIO (CPUSS_SYSARG, out Checksum_all);

Checksum_All = (Checksum_All & 0x0FFFFFFF); // 28-bit checksum

// 2. Find 2-byte checksum of user rows, "Checksum_Privileged" is calculated in Step 4.
Chip_Checksum = (Checksum_All - Checksum_Privileged) & 0xFFFF;

// 3. Read 2-byte checksum of user code from hex-file
//    HEX_ReadChecksum() must be implemented by Programmer.
Hex_Checksum = HEX_ReadChecksum();

// 4. Compare silicon's vs hex's checksum
if (Chip_Checksum != Hex_Checksum) return FAIL;

return PASS;
//------------------------------------------------------------------------------
```

A Chip-level protection

Chip-level protection restricts an external programmer's access to silicon resources by way of the SWD bus. However, it does not restrict firmware. If any resource is not accessible, the SWD transaction is NACKed. By contrast, row-level protection restricts the firmware and the external programmer from writing to the protected flash rows.

There are four chip-level protection modes: VIRGIN, OPEN, PROTECTED, and KILL.

Table A-1. States of chip-level protection modes

Protection state	Value in SFlash and CPUSS_PROTECTION	Value in written supervisory row	Restrictions
VIRGIN	0x00	0x01	This information is included only for completeness. After trimming, the silicon is moved to OPEN mode for the customer. A customer should never see or use VIRGIN mode. WARNING: It is possible to set a part to VIRGIN mode. Doing so removes critical trim and other settings provided by Infineon. This makes the part unusable.
OPEN	0x01	0x00	Silicon is shipped to customers in OPEN mode. An external debugger can access all the needed resources for full-functional debugging of an application. Flash, SRAM, supervisory flash, and registers are available via the DAP.
PROTECTED	0x02	0x02	In this mode, the silicon allows limited access via DAP. Access to Flash, SRAM, and most of the registers is disabled, so SWD transactions are NACKed for master. This is true for read and write requests on the SWD bus. In this mode it is possible to read the silicon ID and move the chip back to OPEN mode.
KILL	0x04	0x04	KILL mode completely locks the SWD-pins from an external programmer. Firmware cannot be updated, so it must be bug-free. If this mode is needed, then it is recommended that you enable it only for production programming of a final application.

The chip-level protection byte is located in the supervisory row of macro 0 at offset 0x7F. It can be programmed only when row-level protection is updated for the macro. The actual value of the OPEN mode that is written into flash is 0x00 and not 0x01, which is the real value in the hex file. For the VIRGIN and OPEN modes, the value saved in the supervisory row is inverted. This is done to prevent accidental resets to the VIRGIN mode during programming.

The EraseAll() operation clears a whole row, resetting every byte to 0. After the EraseAll() operation, which is the first operation targeting the flash during programming, the chip is left in the VIRGIN mode, which is not correct. It must be in OPEN mode even after the chip is reset. During startup, the boot code reads 0x00 from the supervisory row and translates it to 0x01 before writing to the CPUSS_PROTECTION register, which defines the current mode for the CPU. The corresponding value of 0x01 from the supervisory row is similarly translated to 0x00 (VIRGIN) for CPUSS_PROTECTION. PROTECTED and KILL modes are not changed by the boot code. The mode is copied directly to the CPUSS_PROTECTION register. Specifically, the OPEN-VIRGIN modes swapped in flash must be considered during the verification operation, when the protection byte is read from the supervisory row and compared with the corresponding value from hex.

Chip-level protection

Which mode you can set depends upon the current protection mode. See **Figure A-1** for possible transition paths, and the impact of each transition.

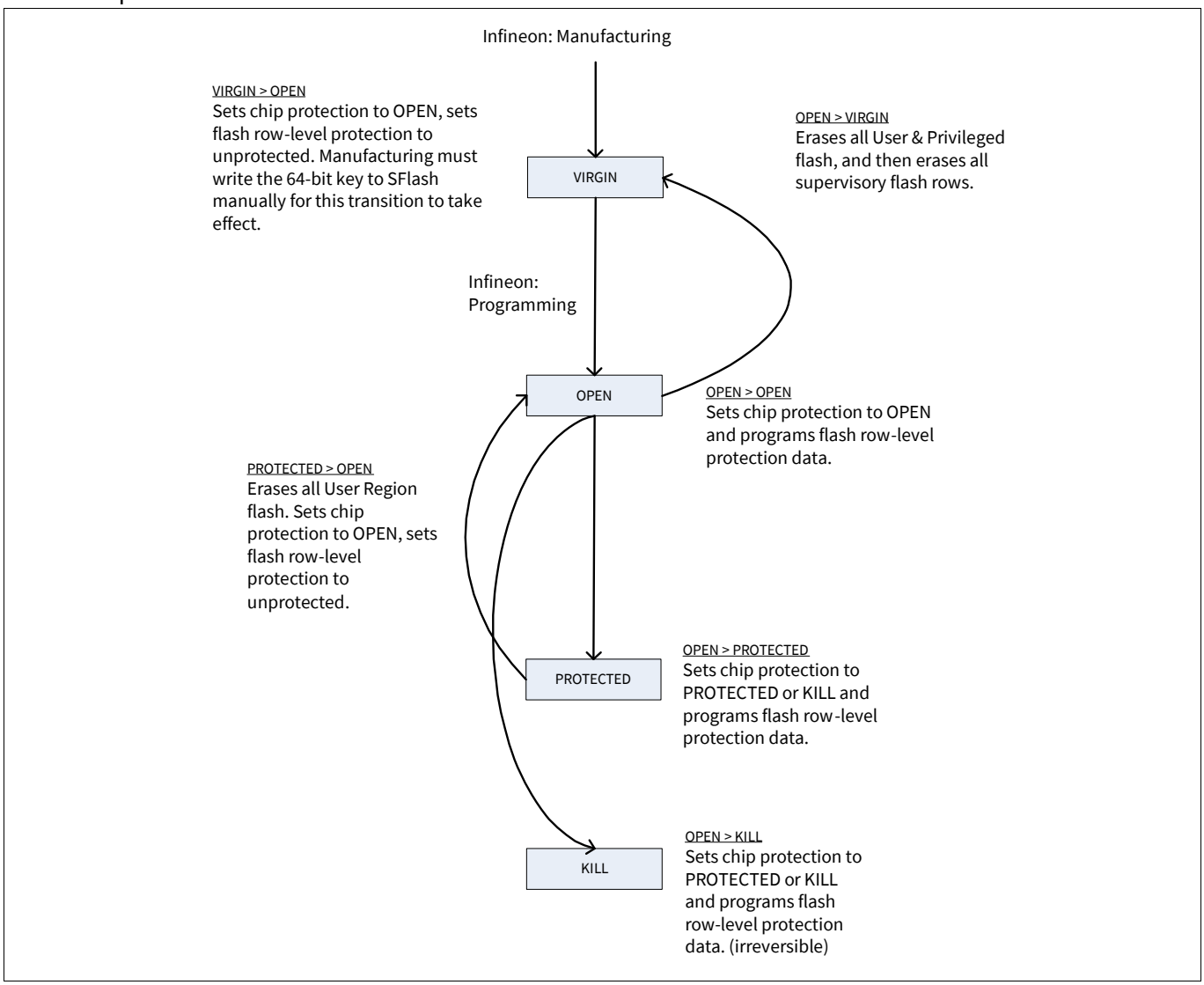

Figure A-1. Chip-level protection mode diagram

The customer receives the device in the OPEN mode and can move it to OPEN, PROTECTED, or KILL. Moving to VIRGIN mode is discouraged because the part will be untrimmed and therefore not operable. From PROTECTED mode, the customer can move the part back to OPEN. There is no way to leave the KILL mode.

B Intel hex file format

Intel hex file records are a text representation of hexadecimal-coded binary data. Only ASCII characters are used, so the format is portable across most computer platforms. Each line (record) of the Intel hex file consists of six parts.

Start Code (Colon Character)	Byte Count (1 byte)	Address (2 bytes)	Record Type (1 byte)	Data (N bytes)	Checksum (1 byte)

Figure B-1. Hex file record structure

Start code, one character — an **ASCII** colon ':'

Byte count, two hex digits (1 byte) — specifies the number of bytes in the data field.

Address, four hex digits (2 bytes) — a 16-bit address of the beginning of the memory position for the data.

Record type, two hex digits (00 to 05) — defines the type of the data field. The record types used in the hex file are as follows.

- 00 – Data record, which contains data and 16-bit address.
- 01 – End of file record, which is a file termination record and has no data. This must be the last line of the file; only one is allowed for every file.
- 04 – Extended linear address record, which allows full 32-bit addressing. Address field is 0000. Byte count is 02. The two data bytes represent the upper 16 bits of the 32-bit address, when combined with the lower 16-bit address of the 00 type record.

Data, a sequence of 'n' bytes of the data, represented by 2n hex digits.

Checksum, two hex digits (1 byte), which is the least significant byte of the two's complement of the sum of the values of all fields except fields 1 and 6 (start code ':' byte and two hex digits of the checksum).

Examples for the different record types used in the hex file generated for the target device are as follows.

Consider that these three records are placed in consecutive lines of the hex file (chip-level protection and end of hex file).For the sake of readability, the "record type" is highlighted in red and the 32-bit address of the chip-level protection is in blue.

- :020000**04**90600A
- :01000000**02**FD
- :00000**01**FF

The first record (*:0200000490600A*) is an extended linear address record as indicated by the value in the Record Type field (04). The address field is 0000, the byte count is 02. This means that there are two data bytes in this record. These data bytes (0x9060) specify the upper 16 bits of the 32-bit address of data bytes. In this case, all the data records that follow this record are assumed to have their upper 16-bit address as 0x9060. In other words, the base address is 0x90600000. The checksum byte for this record is 0A.

0x0A = 0x100 – (0x02+0x00+0x00+0x04+0x90+0x60).

The next record (:0100000002FD) is a data record, as indicated by the value in the Record Type field (00). The byte count is 01, meaning there is only one data byte in this record (02). The 32-bit starting address for these data bytes is at address 0x90600000. The upper 16-bit address (0x9060) is derived from the extended linear address record in the first line; the lower 16-bit address is specified in the address field of this record as 0000. The checksum byte for this record is FD.

The last record (:00000001FF) is the end-of-file record, as indicated by the value in the Record Type field (01). This is the last record of the hex file.

C Serial Wire Debug (SWD) protocol

The SWD protocol is a packet-based serial transaction protocol. At the pin level uses a single bidirectional data connection (SWDIO) and a clock connection (SWDCLK). The host programmer always drives the clock line, while either the programmer or the target device drives the data line. A complete data transfer (one SWD packet) requires 46 clocks and consists of three phases:

- **Packet Request** – The host programmer issues a request to the target device (silicon).
- **Acknowledge Response** – The target device (silicon) sends an acknowledgment to the host.
- **Data Transfer Phase** – The data transfer is either from the target to the host, (following a read request, RDATA), or from the host to the target, (following a write request, WDATA). This phase occurs only when a packet request phase is followed by a valid (OK) acknowledge response.

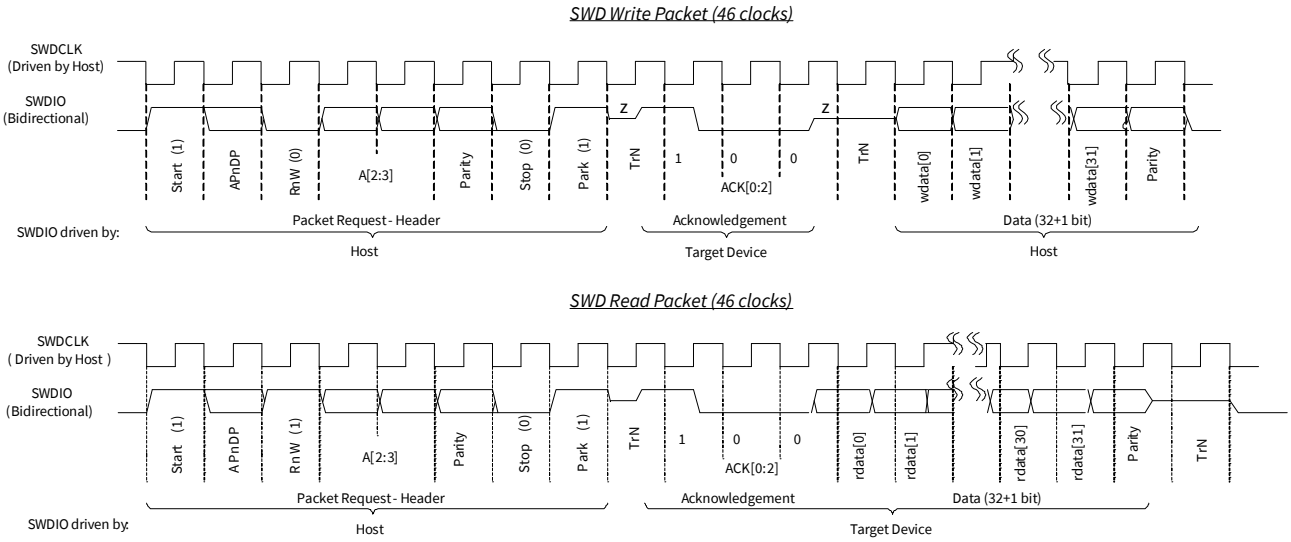

a) Host Write Cycle – host sends data on the SWDIO line on falling edge of SWDCLK and target will read that data on next SWDCLK rising edge (for example, eight bit header data).

b) Host Read Cycle – target sends data on SWDIO line on rising edge of SWDCLK and the Host should read that data on next SWDCLK falling edge (for example, ACK phase (ACK[2:0]), Read Data (rdata[31:0])).

c) The Host should not drive the SWDIO line during TrN phase. During first TrN phase (½ cycle duration) of SWD packet, target starts driving the ACK data on the SWDIO line on the rising edge of SWDCLK. The host should read the data on the subsequent falling edge of SWDCLK. The second TrN phase is 1.5 clock cycles as shown in figure above. Both target and host will not drive the line during the entire second TrN phase (indicated as 'z'). Host should start sending the Write data (wdata) on the next falling edge of SWDCLK after second TrN phase.

Figure C-1. Write and Read SWD packet timing diagrams

The SWD packet transfer contains these elements. The ordering of the elements varies for Write and Read operations.

1. The start bit initiates a transfer; it is always logical 1.
2. The APnDP bit determines whether the transfer is an AP access (indicated by 1), or a DP access (indicated by 0).
3. The RnW bit is 1 for read from the device or 0 for a write to the device.
4. The ADDR bits (A[3:2]) are register select bits for the access port or debug port. See **Table 3-2** for register definition.
5. The parity bit contains the parity of APnDP, RnW, and ADDR bits. This is an even parity bit. If the number of logical 1s in these bits is odd, then the parity must be '1'; otherwise it is '0'.
   Note: If the parity bit is not correct, the target device ignores the header, and there is no ACK response. From the host standpoint, the programming operation should be aborted and retried by doing a device reset.
6. The stop bit is always logic 0.
7. The park bit is always logic 1 and should be driven high by the host.

8. The ACK bits are device-to-host response. Possible values are shown in the following table. Note that ACK in the current SWD transfer reflects the status of the previous transfer. What you do in the case of a WAIT response varies based on whether it is a Read or Write operation.
   a) If the transaction is a read, the host should ignore the data read in the data phase. The target does not drive the line and the host must not check the parity bit as well.
   b) If the transaction is a write, the data phase is ignored by the target device. However, the host must still send the data to be written from the standpoint of implementation. The parity data parity bit corresponding to the data should also be sent by the host.

ACK[2:0]	SWD	Description
OK	001	The previous packet was successful.
WAIT	010	The target device is processing the previous transaction. The host can try for a maximum of four continuous WAIT responses to see if an OK response is received. If it fails, then the programming operation should be aborted and retried.
FAULT	100	The programming operation should be aborted and retried by doing a device reset.

9. The data phase includes a parity bit (even parity)
   a) For a read packet, if the host detects a parity error, then it must abort the programming operation and try again.
   b) For a write packet, if the target device detects a parity error in the data sent by the host, it generates a FAULT ACK response in the next packet.
10. Turnaround (TrN) phase: There is a single-cycle turnaround phase between the packet request and the ACK phases, as well as between the ACK and data phases for write transfers as shown in **Figure C-1**. According to the SWD protocol, both the host and the target use the TrN phase to change the drive modes on the SWDIO line. During the first TrN phase after packet request, the target starts driving the ACK data on the SWDIO line on the rising edge of SWDCLK in the TrN phase. This ensures that the host can read the ACK data on the next falling edge. Thus, the first TrN cycle lasts for only for a half-cycle. The second TrN cycle of the SWD packet is one and one-half cycle long. Neither the host nor the target device should drive the SWDIO line during the TrN phase, as indicated by 'z' in **Figure C-1**.
11. The address, ACK, and read and write data are always transmitted LSB first.
12. According to the SWD protocol, the host can generate any number of SWD clock cycles between two packets with the SWDIO low. It is recommended that you generate several dummy clock cycles (three) between two packets or make clock free running in IDLE mode.

Note: *The SWD interface can be reset by clocking 50 or more cycles with the SWDIO kept high. To return to the idle state, SWDIO must be clocked low once.*

D Timing specifications of the SWD interface

The external host should perform all read or write operations on the SWDIO line on the falling edge of SWDCLK. The target device performs read or write operations on SWDIO on the rising edge of SWDCLK. For clock frequency limitations see the datasheet for the target.

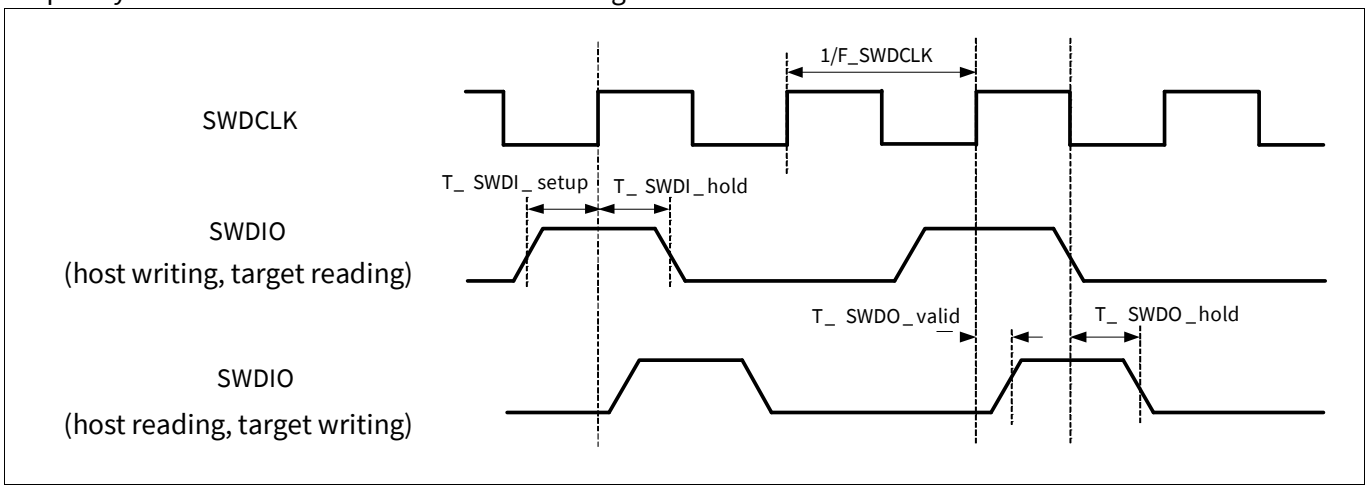

Figure D-1. SWD interface timing diagram

Table D-1. SWD interface AC specifications

Symbol	Description	Conditions	Min	Max	Units
F_SWDCLK	SWDCLK frequency	3.3 V ≤ VDDD ≤ 5.0 V	Refer to the target datasheet.		
		1.71 V ≤ VDDD ≤ 3.3 V			
T_SWDI_setup	SWDIO input setup before SWDCLK HIGH	T = 1 / F_SWDCLK	T/4	–	ns
T_SWDI_hold	SWDIO input hold after SWDCLK HIGH	T = 1 / F_SWDCLK	T/4	–	ns
T_SWDO_valid	SWDCLK high to SWDIO output valid	T = 1 / F_SWDCLK	–	T/2	ns
T_SWDO_hold	SWDIO output hold after SWDCLK HIGH	T = 1 / F_SWDCLK	1	–	ns

Although the Arm® specification does not define the minimum frequency of the SWD bus, the minimum for the target family is 1.5 MHz. This is only needed on the first step to acquire the silicon during the boot window. After that, programming frequency can be as low as needed.

Revision history

Document revision	Date	Description of changes
**	2021-07-08	New specification
*A	2021-09-10	Added EZ-PD™ PMG1-S3 MCU device
*B	2022-03-16	Removed program user flash content from **2 Required data** and **4 Programming algorithm** chapters
*C	2022-06-30	Added EZ-PD™ PMG1-B1 MCU device: Updated Table 1-1 Updated Figure 3-3
*D	2026-09-09	Added EZ-PD™ PMG1-B2 MCU device: Updated Table 1-1 Updated Figure 3-3

Trademarks
All referenced product or service names and trademarks are the property of their respective owners.

Edition: 2026-09-09

Published by
Infineon Technologies AG
Am Campeon 1-15
85579 Neubiberg, Germany

© 2026 Infineon Technologies AG.
All rights reserved

Do you have a question about this document?
Email: erratum@infineon.com

Document reference:
002-33540 Rev. *D

Important Notice

Products which may also include samples and may be comprised of hardware or software or both ("Product(s)") are sold or provided and delivered by Infineon Technologies AG and its affiliates ("Infineon") subject to the terms and conditions of the frame supply contract or other written agreement(s) executed by a customer and Infineon or, in the absence of the foregoing, the applicable Sales Conditions of Infineon. General terms and conditions of a customer or deviations from applicable Sales Conditions of Infineon shall only be binding for Infineon if and to the extent Infineon has given its express written consent.

For the avoidance of doubt, Infineon disclaims all warranties of non-infringement of third-party rights and implied warranties such as warranties of fitness for a specific use/purpose or merchantability.

Infineon shall not be responsible for any information with respect to samples, the application or customer's specific use of any Product or for any examples or typical values given in this document.

If this document is marked as 'Preliminary', 'Target', 'Draft' or 'Proposal', Infineon reserves the right to change all information given in this document at any time without notice. Subject to the development and release of a Product for series supply by Infineon, the technical specifications of the Product are set forth in the relevant datasheet provided by Infineon without such marking.

The data contained in this document is exclusively intended for technically qualified and skilled customer representatives. It is the responsibility of the customer to evaluate the suitability of the Product for the intended application and the customer's specific use and to verify all relevant technical data contained in this document in the intended application and the customer's specific use. The customer is responsible for properly designing, programming, and testing the functionality and safety of the intended application, as well as complying with any legal requirements related to its use.

Unless otherwise explicitly approved by Infineon, Products may not be used in any application where a failure of the Products or any consequences of the use thereof can reasonably be expected to result in personal injury. However, the foregoing shall not prevent the customer from using any Product in such fields of use that Infineon has explicitly designed and sold it for, provided that the overall responsibility for the application lies with the customer.

Infineon expressly reserves the right to use its content for commercial text and data mining (TDM) according to applicable laws, e.g. Section 44b of the German Copyright Act (UrhG).

If the Product includes security features:

Because no computing device can be absolutely secure, and despite security measures implemented in the Product, Infineon does not guarantee that the Product will be free from intrusion, data theft or loss, or other breaches ("Security Breaches"), and Infineon shall have no liability arising out of any Security Breaches.

If this document includes or references software:

The software is owned by Infineon under the intellectual property laws and treaties of the United States, Germany, and other countries worldwide. All rights reserved.

Therefore, you may use the software only as provided in the software license agreement accompanying the software.

If no software license agreement applies, Infineon hereby grants you a personal, non-exclusive, non-transferable license (without the right to sublicense) under its intellectual property rights in the software (a) for software provided in source code form, to modify and reproduce the software solely for use with Infineon hardware products, only internally within your organization, and (b) to distribute the software in binary code form externally to end users, solely for use on Infineon hardware products. Any other use, reproduction, modification, translation, or compilation of the software is prohibited.

For further information on the Product, technology, delivery terms and conditions, and prices, please contact your nearest Infineon office or visit https://www.infineon.com.