Application Note, Version 0.1, 2002-07-25

TDx51xx

EMI-Improvement for TDx51xx-Transmitters



Wireless Components

Infineon technologies

Never stop thinking.

Edition 2002-07-25

Published by Infineon Technologies AG,
St.-Martin-Strasse 53,
D-81541 München, Germany

© Infineon Technologies AG 4/1/04.
All Rights Reserved.

Attention please!

The information herein is given to describe certain components and shall not be considered as warranted characteristics.

Terms of delivery and rights to technical change reserved.

We hereby disclaim any and all warranties, including but not limited to warranties of non-infringement, regarding circuits, descriptions and charts stated herein.

Infineon Technologies is an approved CECC manufacturer.

Information

For further information on technology, delivery terms and conditions and prices please contact your nearest Infineon Technologies Office in Germany or our Infineon Technologies Representatives worldwide (see address list).

Warnings

Due to technical requirements components may contain dangerous substances. For information on the types in question please contact your nearest Infineon Technologies Office.

Infineon Technologies Components may only be used in life-support devices or systems with the express written approval of Infineon Technologies, if a failure of such components can reasonably be expected to cause the failure of that life-support device or system, or to affect the safety or effectiveness of that device or system. Life support devices or systems are intended to be implanted in the human body, or to support and/or maintain and sustain and/or protect human life. If they fail, it is reasonable to assume that the health of the user or other persons may be endangered.

TDx51xx

EMI-Improvement for TDx51xx-Transmitters

Wireless Components



Never stop thinking.

Application Note

Revision History: **2002-07-25** TDx51xx

Previous Version:

Page	Subjects (major changes since last revision)

For questions on technology, delivery and prices please contact the Infineon Technologies Offices in Germany or the Infineon Technologies Companies and Representatives worldwide: see our webpage at http://www.infineon.com

ABM®, AOP®, ARCOFI®, ARCOFI®-BA, ARCOFI®-SP, DigiTape®, EPIC®-1, EPIC®-S, ELIC®, FALC®54, FALC®56, FALC®-E1, FALC®-LH, IDEC®, IOM®, IOM®-1, IOM®-2, IPAT®-2, ISAC®-P, ISAC®-S, ISAC®-S TE, ISAC®-P TE, ITAC®, IWE®, MUSAC®-A, OCTAT®-P, QUAT®-S, SICAT®, SICOFI®, SICOFI®-2, SICOFI®-4, SICOFI®-4µC, SLICOFI® are registered trademarks of Infineon Technologies AG.

ACE™, ASM™, ASP™, POTSWIRE™, QuadFALC™, SCOUT™ are trademarks of Infineon Technologies AG.

Controller Area Network (CAN): License of Robert Bosch GmbH

1. Introduction

The TDx51xx-series are single-chip PLL-transmitter-ICs designed for RKE and remote controls along with any other ISM-applications.

During EMI-tests the application is subject to a strong radiated electromagnetic field of variable frequency. For certain applications (especially for automotive) the design has to withstand a very high field strength. This application note shows some ways for improvement of the EMI-performance.

2. Compact Layout

A good layout is very important. A groundplane should be used below all components. PCB-traces should be as short as possible, especially at the crystal oscillator.

3. Filtering

A series inductance (100-220nH) placed directly at pin10 (COSC) acts as a high impedance at high frequencies of the interferer. So the interference at pin10 will be reduced.

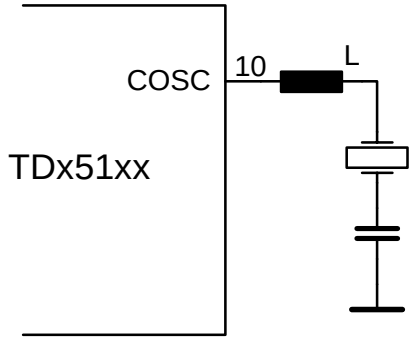

Inductor.wmf

Figure 1 Inductor