Blood Pressure Monitor Using PSoC® 3 / PSoC 5

AN62651

Author: Praveen Sekar, Sanjeev Kumar
Associated Project: Yes
Associated Part Family: CY8C34XX,CY8C36XX,CY8C38XX
Software Version: PSoC® Creator™
Prerequisites: AN58128

Application Note Abstract

This application note shows how a blood pressure (BP) monitor can be implemented in PSoC® 3 / PSoC 5. The flexibility of PSoC 3 / PSoC 5 enables you to implement BP monitor in two different ways, one using analog signal processing and other using digital signal processing.

Introduction

BP is one of the vital signs of human body. There are various invasive and non-invasive techniques to measure BP. This application note describes the oscillometric method of implementing BP monitor in PSoC 3 / PSoC 5. With CapSense® for the input touch sensing user interface, direct segment LCD drive for displaying the BP values, and on-chip EEPROM for storing historical BP values, PSoC 3 / PSoC 5 provides a complete integration of the whole functionality within a chip.

Basic Principle

When the air pressure in the cuff surrounding the arm is gradually decreased from a maximum pressure, pressure beyond the systolic pressure where the blood flow is completely occluded, the artery starts pulsating when BP reaches systolic pressure. It continues to pulsate until the point where the BP goes below the diastolic pressure where there is free blood flow. These pulsations are at the heart rate.

By converting these pulsations to electrical oscillations, the systolic and diastolic pressures are determined. Systolic pressure is the pressure corresponding to the point where the oscillations start and diastolic pressure is the pressure corresponding to the point where the oscillations end. By measuring the frequency of these oscillations the heart rate can be determined. The following figure shows a typical oscillometric waveform. As the pressure in the cuff is decreased, we see the oscillations start, grow big and then finally die down. These oscillations, as seen in the following figure, are of very low amplitude and should be filtered and amplified to make out meaningful information. The filtered oscillations after amplification are shown in the next figure. After amplification, you can identify the start and end of oscillations easily.

AN58218 provides a description of the commonly used methods for monitoring BP and also provides a description of the oscillometric method.

Figure 1. Oscillometric Waveform

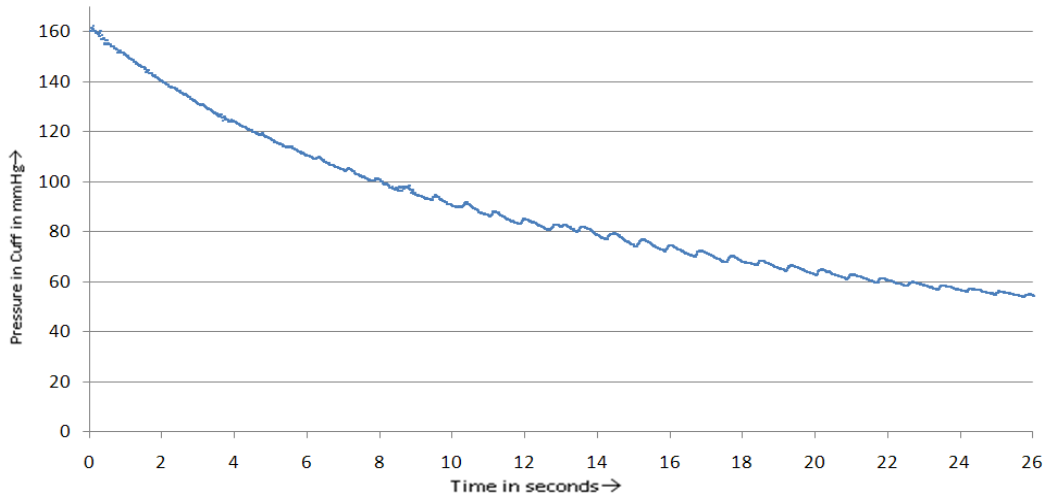

[+] Feedback

Figure 2. Filtered Oscillations

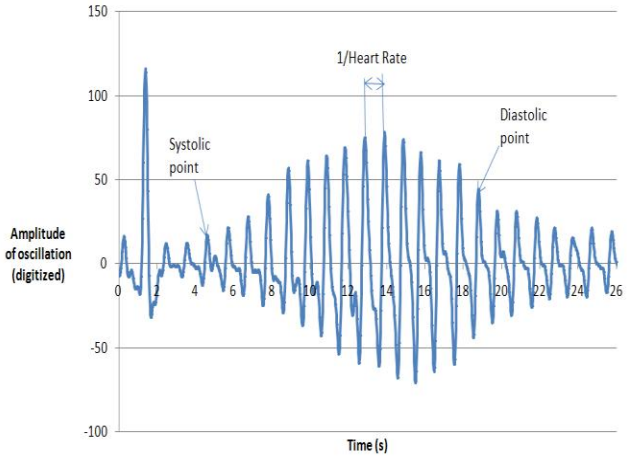

Figure 2 shows the systolic and diastolic points. The pressures corresponding to these points (time) gives the systolic and diastolic pressures. For these figures, the pressure at 4.2 s (approximate) gives the systolic pressure and the pressure at 19 s (approximate) gives the diastolic pressure.

Hardware Requirements

- A pressure sensor to convert the pressure variations to electrical signal
- An amplifier to amplify the pressure sensor output
- A band pass filter with sufficient gain to filter slow varying AC component (cuff oscillations) and amplify it
- An analog to digital convertor to measure the pressure sensor output and the filter output
- Two pulse with modulators (PWM), one to drive the motor and another the valve to control the rate of inflation and deflation of the cuff
- A timer to measure the heart rate
- A safety timer to detect if the pressure is held high above a threshold for more than a specified duration and release the valve if so. (The Association for the Advancement of Medical Instrumentation (AAMI) standards defines the time duration beyond which you cannot hold the cuff pressure above a specified threshold)

The following figure shows the block diagram for the oscillometric method based BP monitor.

Figure 3. PSoC 3 / PSoC 5 BPM Block Diagram

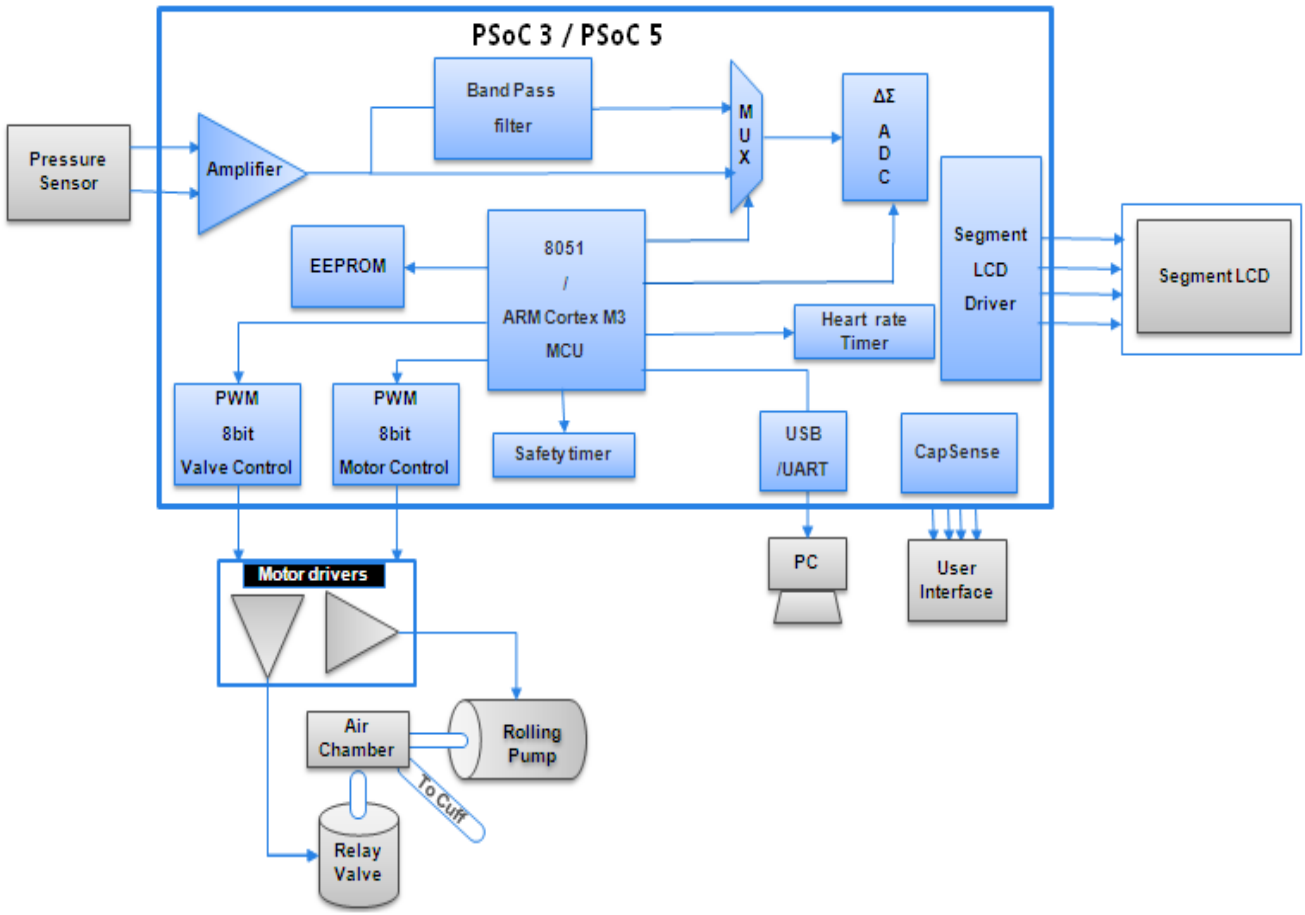

[+] Feedback

Method 1: Analog Filtering

Following is the top design of the analog filtering based solution.

Figure 4. BPM Using Analog Filtering Method in PSoC 3 / PSoC 5. Internal Schematic - Page 1

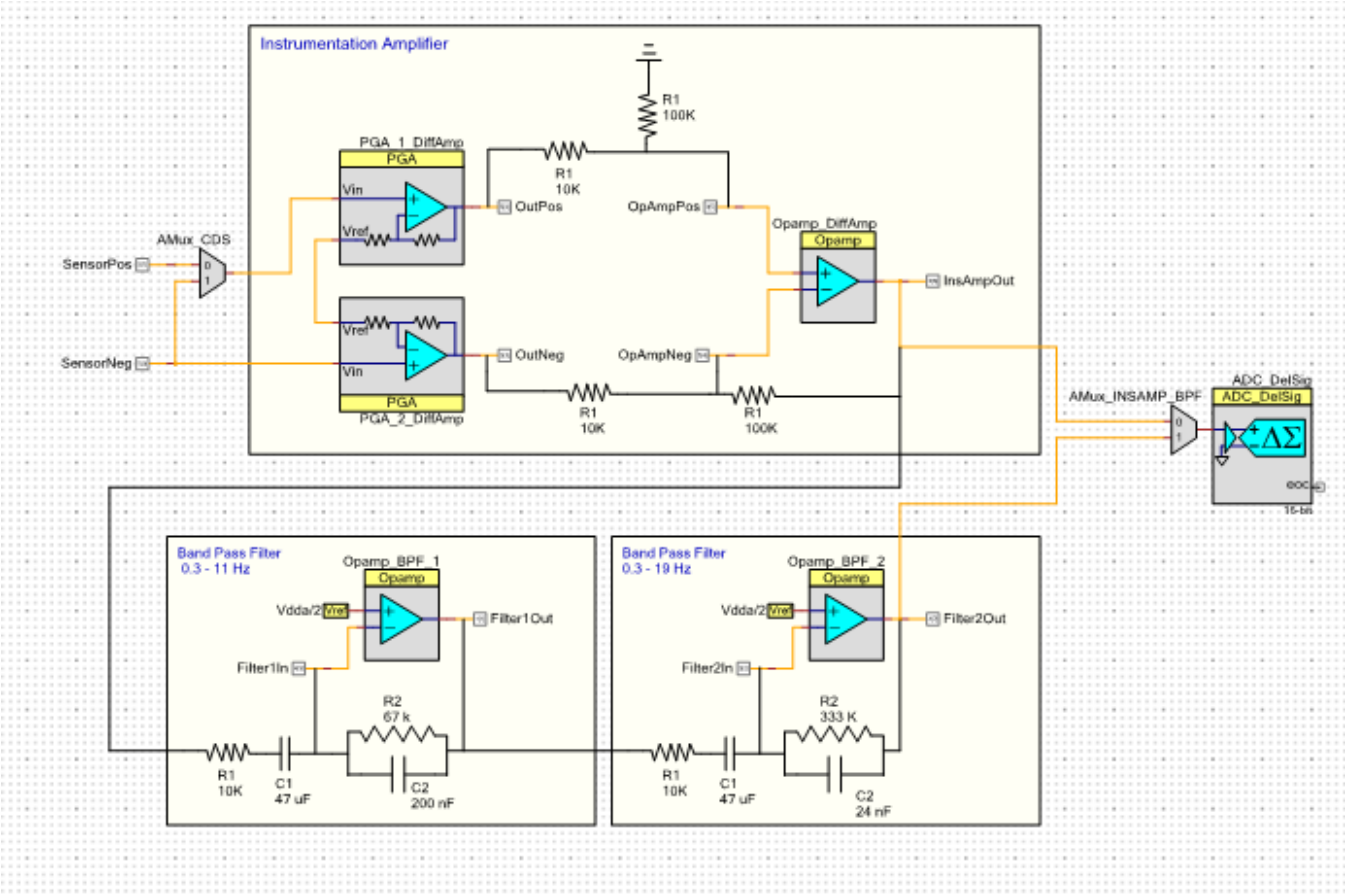

[+] Feedback

Figure 4. BPM Using Analog Filtering Method in PSoC 3 / PSoC 5. Internal Schematic - Page 2

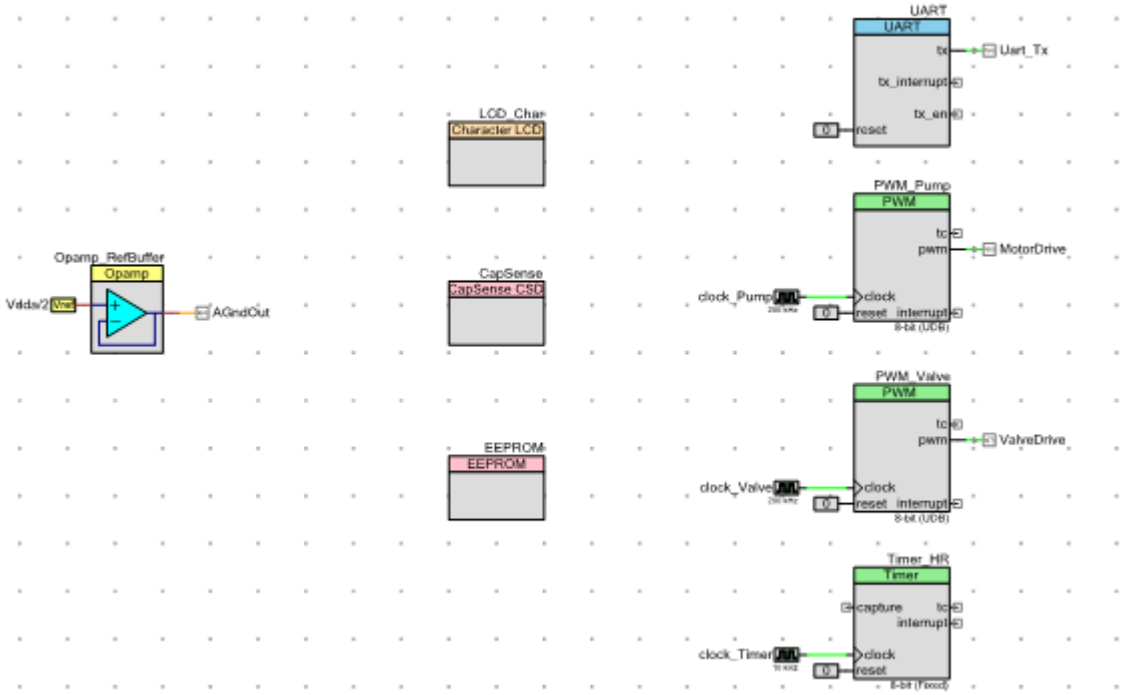

Pressure Sensor

The pressure sensor should operate from 0 to 250 mmHg. This range is inclusive of the maximum systolic pressure that can be encountered. MPX2051 is used in this case. It is a ratio metric sensor giving differential output with a sensitivity of 0.4 mV / KPa or 53 µV / mmHg for a 5 V operation. 0 to 200 mmHg of pressure translate to 0 to 10.6 mV. It has a full scale span of approximately 375 mmHg, offset of < 1mV and a linearity of < 0.3% Full scale. Low offset and good linearity are important for good accuracy of the pressure values.

Amplifier

The amplifier should take differential signals, the pressure sensor output being differential, and give out a single ended output so that it can be passed to the subsequent filter stage. Therefore an Instrumentation amplifier should be used. The instrumentation amplifier is constructed in classical three Op-Amp topology. The reference (V_{REF}) is set to $V_{DDA}/2$. This sets the output of the instrumentation amplifier. The instrumentation amplifier is set for a gain of 160 (16 in first stage and 10 in the second stage).

- Variation in pressure = 0 to 200 mmHg
- Pressure sensor sensitivity = 53 µV/mmHg
- Corresponding variation in Voltage = 0 to 10.6 mV
- Voltage at instrumentation amplifier output (gain = 160) = 0 to 1.69 V

Band Pass Filter (BPF)

The filter has to amplify the voltage oscillations, with typical values around 50 to 500 µV rms, rejecting the cuff pressure signal and high frequency noise. These oscillations, as mentioned earlier, are of the heart rate, which is 72 beats per minute or 1.2 Hz for an average human being. A Band pass filter with pass band of 0.3 to 11 Hz is constructed with a gain of around 200. The Band pass filter is implemented in two stages to get this gain. The gain should ensure that the oscillations occupy the full ADC range. Two Op-Amps and external resistors and capacitors are used. These oscillations without any amplification are typically around 50 to 150 µV rms. The Band pass filter is set to gain around 200 so that the final amplitude of oscillations after gain is 1.6 to 4.8 V.

- Typical amplitude of Voltage oscillations = 50 to 150 µV
- Amplitude of oscillations at Instrumentation amplifier output (gain - 160) = 8 to 24 mV
- Amplitude of oscillations at BPF output (gain = 200) = 1.6 to 4.8 V

Analog to Digital Converter (ADC)

A 16-bit delta Sigma ADC in V_{SSA} – V_{DDA} range is used. The resolution actually depends on the final resolution on the BP value required. The ADC input is multiplexed between the instrumentation amplifier output and the filter output every alternate sample. Resolution required for a resolution of 1 mmHg pressure:

- A 1 mm Hg pressure variation = 53 µV change at pressure sensor output = 8.48 mV change at instrumentation amplifier output
- No of ADC bits required for 8.48 mV resolution = log 2 (5000 / 8.48) = 10 bits.
- A 10-bit ADC actually suffices for 1 mmHg resolution

[+] Feedback

Pneumatics

Pneumatics forms the main part of any BP monitoring system. Pneumatics of a typical monitor has the following:

- Cuff
- Air chamber
- Rolling pump
- Solenoid valve

The cuff is worn around the upper arm; it detects the change in pressure due to pulsation of artery. Cuff is connected to pressure sensor through air chamber, which in turn connects to the solenoid valve and rolling pump. Rolling pump inflates the cuff. Solenoid valve deflates the cuff at a defined rate. Usually the deflation rate is lowered if more samples of oscillometric pulses are needed and vice versa. Two PWMs are used to control the motor and the valve.

The following figure shows the PSoC 3 / PSoC 5 BP monitor setup, which includes the pneumatics.

Figure 5. Cuff and PSoC 3 / PSoC 5 BP Monitor EBK

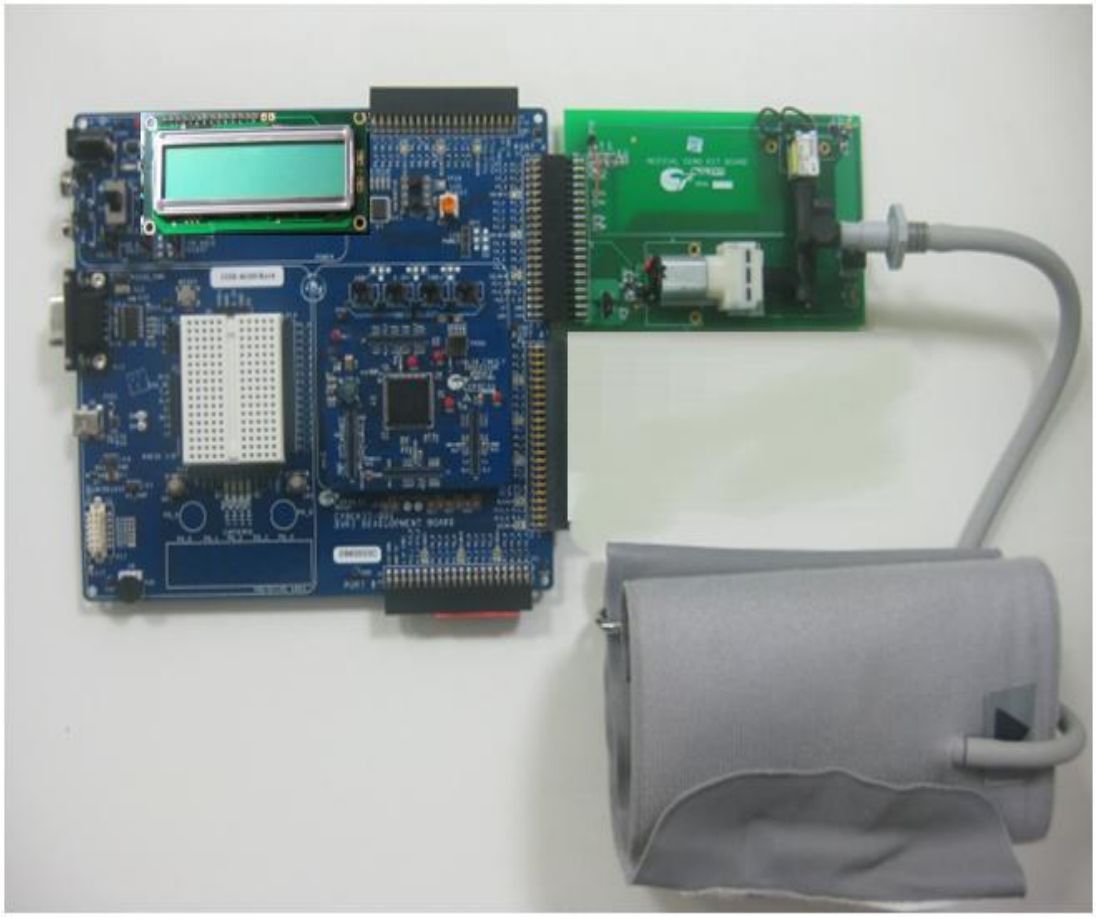

Working

The PWMs are set to 100% duty cycle for inflating the cuff. When the pressure inside the cuff exceeds a threshold, say 160 mmHg, the cuff is deflated. The systolic and diastolic pressures are determined based on the filter (ADC) output.

Project Description

A project based on analog signal processing is attached with this application note. This project helps extract the pressure and oscillometric waveform from which you can find the BP by manual inspection or using your own algorithm. The project puts the pressure values and filtered output through UART in a comma separated format so that you can directly import it to MS excel in .csv format to plot graphs and find systolic and diastolic pressures.

Method 2: Digital Filtering

The following figure shows a top design of Digital Filter based BP monitor. The Instrumentation amplifier, analog filter with ADC combination is replaced with just ADC with Digital filter. The ADC provides all the required amplification.

Figure 6. BPM Using Digital Filtering – PSoC 3 / PSoC 5 Internal Schematic

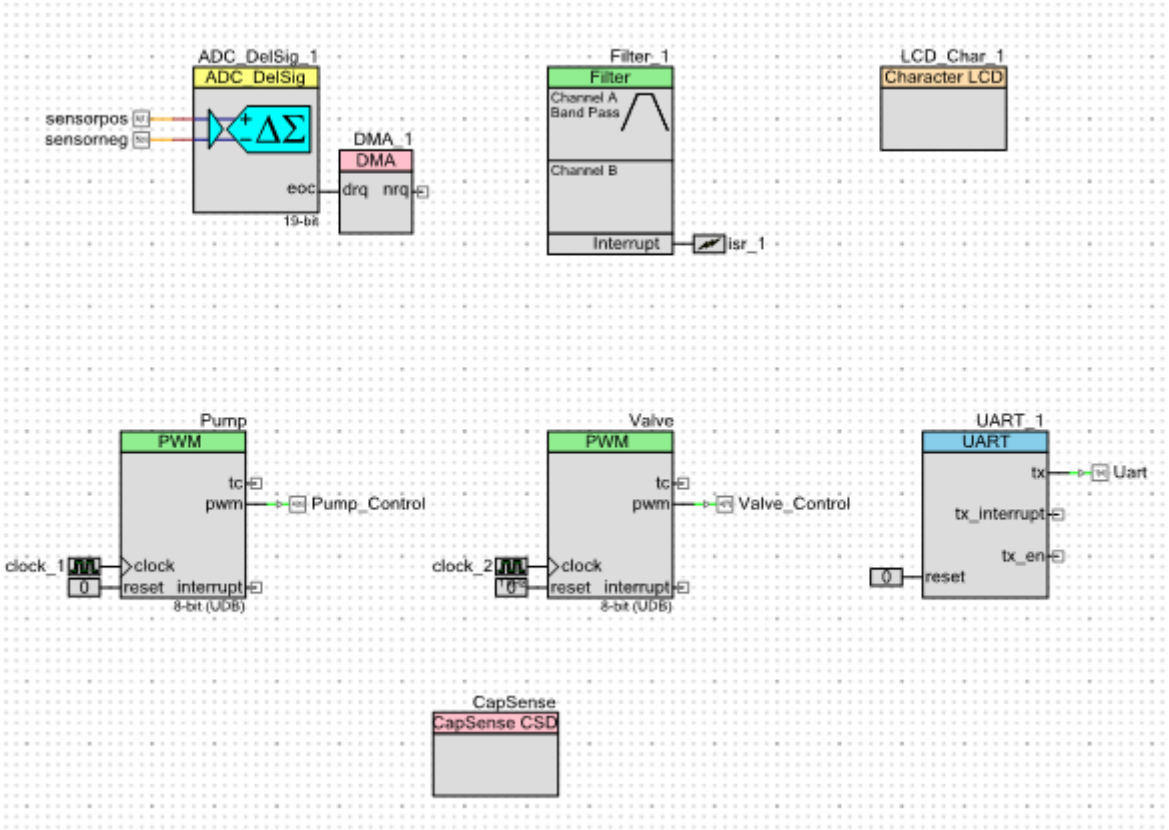

Amplifier

The ADC, by itself, can provide a total gain of 128 eliminating the need for an external amplifier. The gain and resolution have to be selected in such a way that a signal with sufficiently high resolution is fed to the DFB. In case of the analog solution, the BPFs provided a gain of close to 200 to have sufficiently high amplitude of oscillation. However, the DFB cannot provide gain in this case. A gain in the DFB is just equivalent to multiplying the DFB output by a constant factor which is of no use if the resolution is insufficient. So, the input to the DFB should be fed with sufficiently high resolution so that the oscillations can be detected easily. To achieve this, a gain of 32 (8 in buffer and 4 in modulator) is given.

- Amplitude of cuff oscillations = 150 µV
- ADC gain = 32
- Amplitude seen by the ADC = 4.8 mV
- Resolution of a 16-bit ADC (± 1.024 V range) = 32 µV
- No of digital codes obtained by 16-bit ADC in 4.8 mV range = 150

150 levels in the oscillometric waveform output is sufficient enough a resolution to determine the systolic and diastolic points. Setting the ADC to its maximum gain (128) and resolution (20), we can have 9792 levels for one oscillation.

Filter

An FIR band pass filter is constructed with the DFB so that it passes 0.3 to 10 Hz. The following is a typical oscillometric waveform filtered with the DFB.

[+] Feedback

Figure 7. Oscillometric Wave form Using Digital Filtering Method

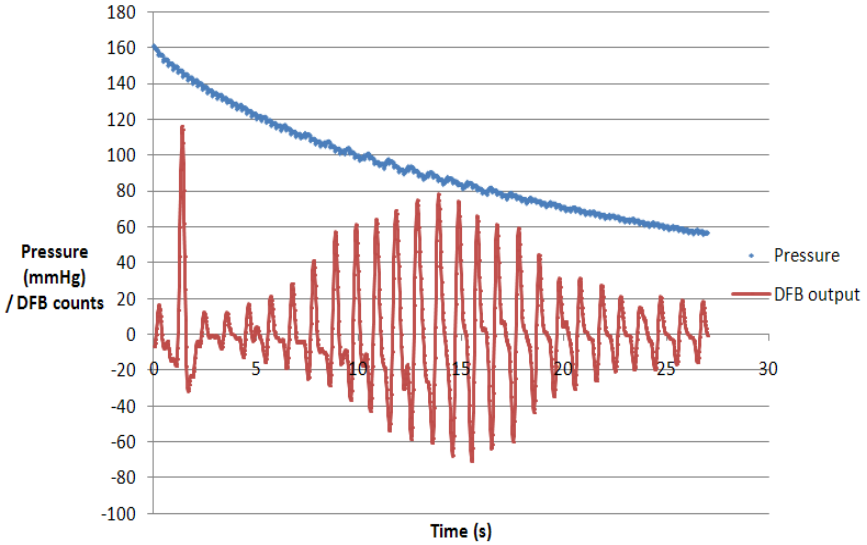

Associated Project

A project based on digital filtering method is also attached with the application note. This does exactly the same functionality as the analog filtering project. It sends the pressure values and the filtered oscillations out through UART as a comma separated value. This can be directly saved in Microsoft Excel in .csv format from the hyper terminal. From this, the systolic and diastolic pressures can be obtained. A sample Excel sheet which plots the waveforms from which systolic pressure, diastolic pressure and heart rate are computed is also provided.

Summary

Two implementation of BP monitor using PSoC 3 / PSoC 5 are discussed. The application note also shows how an analog signal chain, consisting of a high gain instrumentation amplifier, ADC and analog filters, can be replaced with a simple PSoC 3 / PSoC 5 ADC with DFB signal chain can be replaced with reduction in components.

About the Authors

Name:	Praveen Sekar
Title:	Applications Engineer
Background:	Praveen holds a bachelor degree in Electronics and Communication from the College of Engineering, Guindy, Chennai and focuses on analog modules in PSoC.
Contact:	pfz@cypress.com

Name:	Sanjeev Kumar. K
Title:	Applications Engineer
Background:	Sanjeev has a bachelor degree in Electronics and Communication from the College of Engineering, Guindy, Chennai. He currently works on medical electronics application at Cypress.
Contact:	kuk@cypress.com

Document History

Document Title: Blood Pressure Monitor Using PSoC® 3 / PSoC 5

Document Number: 001-62651

Revision	ECN	Orig. of Change	Submission Date	Description of Change
**	2965540	PFZ	06/30/10	New Application Note
*A	3013599	PFZ	08/23/10	Updated Projects to Beta 5.

PSoC is a registered trademark of Cypress Semiconductor Corp. PSoC Creator is a trademark of Cypress Semiconductor Corp. All other trademarks or registered trademarks referenced herein are the property of their respective owners.

Cypress Semiconductor
198 Champion Court
San Jose, CA 95134-1709
Phone: 408-943-2600
Fax: 408-943-4730
http://www.cypress.com/

© Cypress Semiconductor Corporation, 2010. The information contained herein is subject to change without notice. Cypress Semiconductor Corporation assumes no responsibility for the use of any circuitry other than circuitry embodied in a Cypress product. Nor does it convey or imply any license under patent or other rights. Cypress products are not warranted nor intended to be used for medical, life support, life saving, critical control or safety applications, unless pursuant to an express written agreement with Cypress. Furthermore, Cypress does not authorize its products for use as critical components in life-support systems where a malfunction or failure may reasonably be expected to result in significant injury to the user. The inclusion of Cypress products in life-support systems application implies that the manufacturer assumes all risk of such use and in doing so indemnifies Cypress against all charges.

This Source Code (software and/or firmware) is owned by Cypress Semiconductor Corporation (Cypress) and is protected by and subject to worldwide patent protection (United States and foreign), United States copyright laws and international treaty provisions. Cypress hereby grants to licensee a personal, non-exclusive, non-transferable license to copy, use, modify, create derivative works of, and compile the Cypress Source Code and derivative works for the sole purpose of creating custom software and or firmware in support of licensee product to be used only in conjunction with a Cypress integrated circuit as specified in the applicable agreement. Any reproduction, modification, translation, compilation, or representation of this Source Code except as specified above is prohibited without the express written permission of Cypress.

Disclaimer: CYPRESS MAKES NO WARRANTY OF ANY KIND, EXPRESS OR IMPLIED, WITH REGARD TO THIS MATERIAL, INCLUDING, BUT NOT LIMITED TO, THE IMPLIED WARRANTIES OF MERCHANTABILITY AND FITNESS FOR A PARTICULAR PURPOSE. Cypress reserves the right to make changes without further notice to the materials described herein. Cypress does not assume any liability arising out of the application or use of any product or circuit described herein. Cypress does not authorize its products for use as critical components in life-support systems where a malfunction or failure may reasonably be expected to result in significant injury to the user. The inclusion of Cypress' product in a life-support systems application implies that the manufacturer assumes all risk of such use and in doing so indemnifies Cypress against all charges.

Use may be limited by and subject to the applicable Cypress software license agreement.