Please note that Cypress is an Infineon Technologies Company.
The document following this cover page is marked as “Cypress” document as this is the company that originally developed the product. Please note that Infineon will continue to offer the product to new and existing customers as part of the Infineon product portfolio.

Continuity of document content
The fact that Infineon offers the following product as part of the Infineon product portfolio does not lead to any changes to this document. Future revisions will occur when appropriate, and any changes will be set out on the document history page.

Continuity of ordering part numbers
Infineon continues to support existing part numbers. Please continue to use the ordering part numbers listed in the datasheet for ordering.



THIS SPEC IS OBSOLETE

Spec No: 001-58986

Spec Title : AN58986 - NAND FLASH PAGE READER FOR NX2LP BASED MASS STORAGE DEVICES

Sunset Owner: Rama Sai Krishna Vakkantula [rskv]

Replaced by: 001-89950

AN58986

NAND Flash Page Reader for NX2LP Based Mass Storage Devices

Author: Hridya Valsaraju
Associated Project: Yes
Associated Part Family: CY7C68033, CY7C68034
Software Version: Microsoft Visual C# 2008
Related Application Notes: AN61347
Related Hardware: CY3686 Development Kit

AN58986 demonstrates the implementation of a basic utility to read NAND Flash Pages from an NX2LP/NX2LP-Flex based mass storage device.

OBSOLETE

Overview

In this application note, a host application is developed in VC# to demonstrate reading and writing to the pages of a NAND Flash interfaced to an NX2LP/NX2LP-Flex device. This can be used to read from and write to Nand flashes interfaces to NX2LP, by specifying physical addresses. The host application is specific to NX2LP/NX2LP-Flex based mass storage devices because it communicates to the device using vendor specific requests. Vendor specific requests issued through the application are implemented in the NX2LP/NX2LP-Flex firmware.

System Requirements

Software

- MS VC# 2008 Express/Full Edition
- NX2LP.dll included in the “Libraries” folder in the Project attachment.
- CyUSB.dll included in “Libraries” folder in the Project attachment.

Firmware

The firmware to configure NX2LP-Flex is included in CY3686 DVK.

Hardware

The NX2LP-Flex Reference Design Kit (CY3686) was used as the development and testing platforms for this example. A detailed schematic of the DVK is provided in the “Hardware” folder in the attachment.

OS Platforms

The associated project has been tested in Windows XP, Vista and windows 7. In Windows 7, we have seen the utility showing unexpected behavior like, returning incorrect page size of data. This is due to the access rights issues related to windows 7 driver. If this occurs, launch the utility from “Project\NandPageReader\bin\Release” and right click on the exe and select the '**Run as administrator**' option.

Prerequisites

1. CY3686 EZ-USB® NX2LP-Flex Development Kit Guide contains information on getting started with the CY3686 kit, tools, driver installation, etc, which can be found in the “Documentation” folder in the install directory after installing CY3686 DVK
2. NX2LP-Flex USB to NAND Flash Firmware Design Notes - AN61347

Block Diagram

Figure 1. Nand Flash Page Reader Communication with NX2LP-Flex device

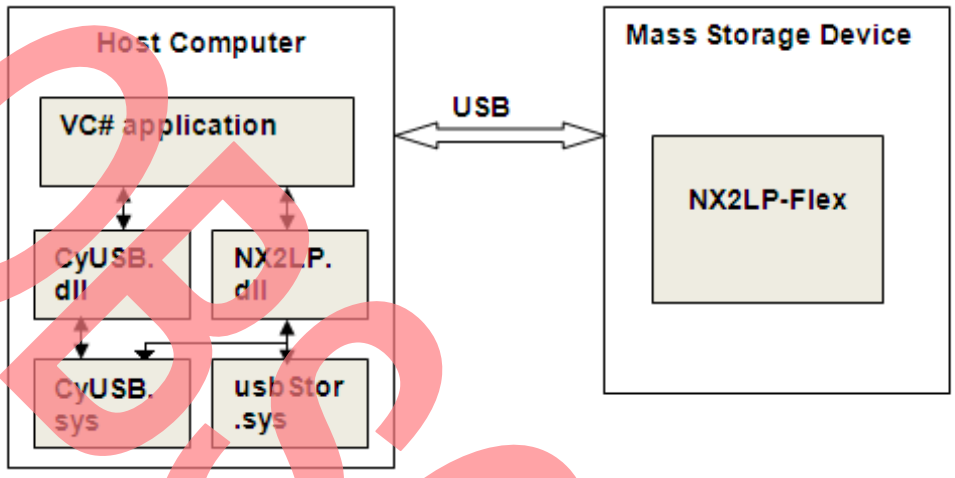

Operation

The NAND Flash Page Reader is created in Microsoft Visual C# 2008 using NX2LP.dll that presents a set of methods to communicate with an NX2LP/NX2LP-Flex based mass storage device bound either to the CyUSB.sys driver or to the mass storage class driver usbstor.sys.

The NX2Device class of NX2LP.dll contains a number of methods such as CbwIn(), CbwOut(), GetNandCapacity(), LookUpNandParams(), SendCbwCommand(), and so on that communicate with the NX2LP device to obtain and write data or configuration information.

To read and write data from the NAND Flash, Page Reader uses the following methods:

- Public bool CbwIn(byte cmd, byte op, byte lun, int bank, int lba, int bytes, byte[] data)
- Public bool CbwOut(byte cmd, byte op, byte lun, int bank, int lba, int bytes, byte[] data)

Sending a CBW (Command Block Wrapper) packet to the NX2LP device with the first byte of the CBW Command Block as 0xC8 implies that the opcode that follows it belongs to a set of NX2LP Manufacturing and Support vendor commands, implemented in CY3686 firmware. These commands include those to read and write NAND pages, to erase blocks, to read Flash ID, to read and write 8051 memory, and so on. The implementation of these commands is provided in the file vend_cbw.c (inside handleVendorCBW() function) included in the CY3686 firmware.

Testing the Project

The application note is tested on the CY3686 development board.

1. Follow the procedure detailed in CY3686 EZ-USB NX2LP-Flex Development Kit Guide in order to configure your NX2LP-based USB device as a mass storage device, which can be found in the “Documentation” folder in the install directory after installing CY3686 DVK.
2. Make sure that your mass storage device appears in the Device Manager and a Removable Drive in ‘My Computer’. Try to copy a file to the device. After disconnecting and reconnecting the device, check for data corruption.
3. Open the Page Reader Utility.
4. Enter the VID/PID of the mass storage device in the utility and press the ‘VERIFY’ button. When the VERIFY button is pressed, the application searches for a device bound to either the mass storage device class driver or the CyUSB.sys driver with the VID/PID entered by the user. If no such device found, status will be displayed as “No Mass Storage device found with VID/PID vvvv pppp”.

OBSOLETE

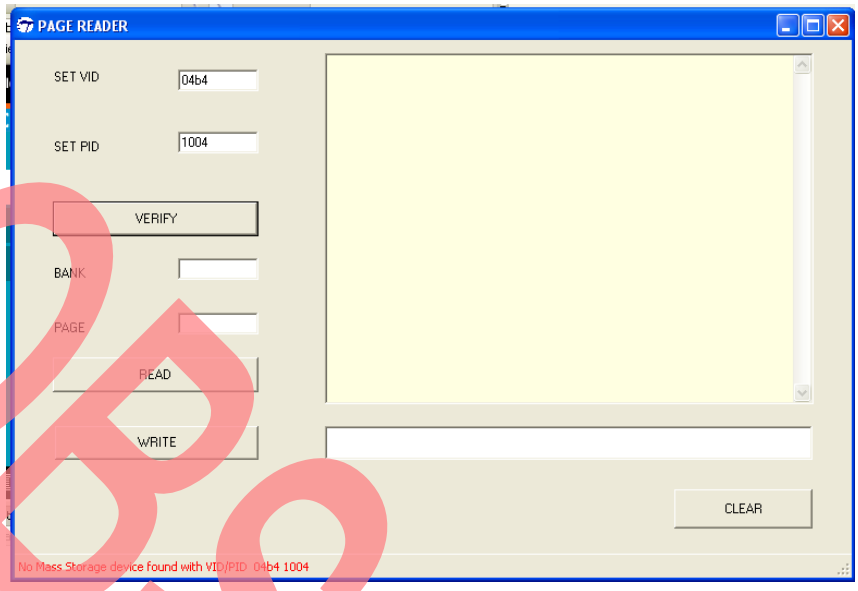

5. If the device is found, the status will be displayed as “VERIFIED”. After the status bar displays the information “VERIFIED” fill in the required Band number in the field “BANK” and the actual Physical address in the field “PAGE”.

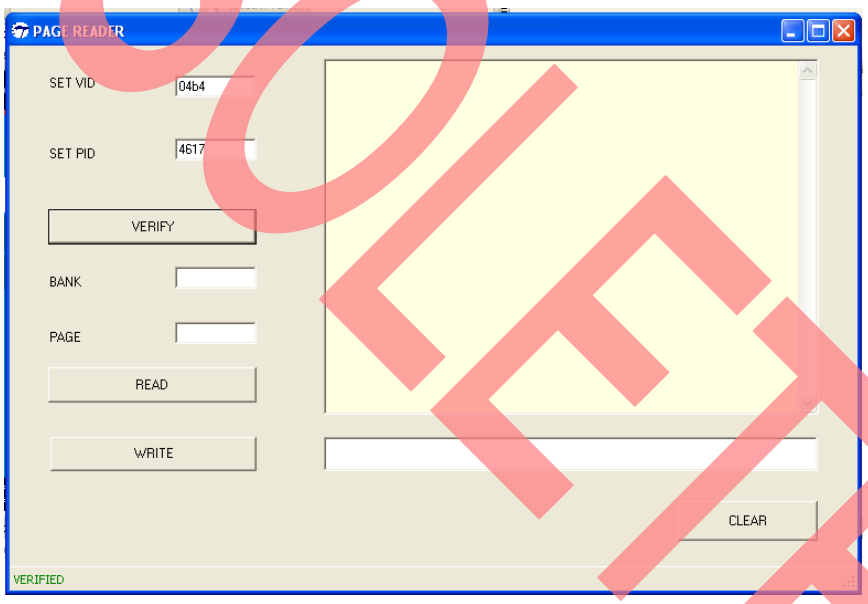

6. Asserting the Read button causes the utility to issue a CBW command to the Mass Storage Device to read from the user specified page. Data and spare area for the page are displayed.

OBSOLETE

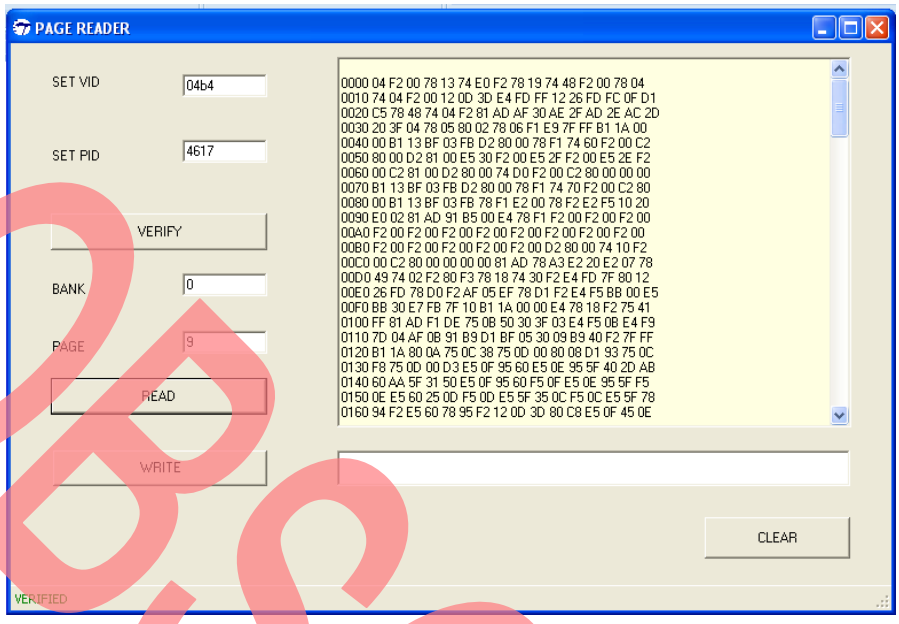

7. Asserting the Write button causes the utility to write the data specified by the user into the NAND page. If the length of the data entered by the user does not equal the page size, then the data is padded with zeroes to make its length equivalent to the page size.

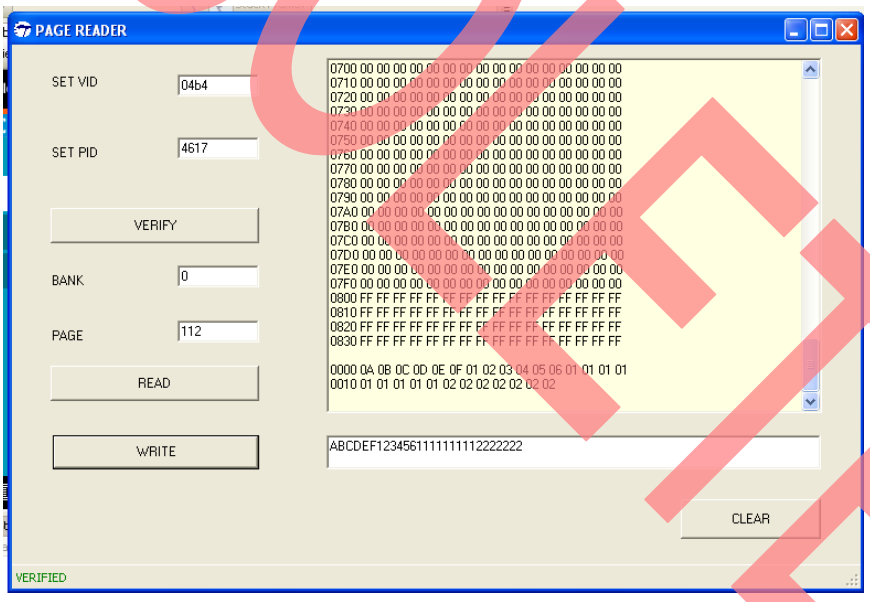

Note Make sure not to overwrite the firmware and the bad block information as this would lead to malfunctioning of the device.

Summary

This application note demonstrates a basic utility to read NAND Flash Pages from an NX2LP/NX2LP-Flex based mass storage device. This can be used to read from and write to Nand flashes interfaced to NX2LP, by specifying the physical addresses.

OBSOLETE

Document History

Document Title: AN58986 - NAND Flash Page Reader for NX2LP Based Mass Storage Devices

Document Number: 001-58986

Revision	ECN	Orig. of Change	Submission Date	Description of Change
**	2860917	HRID	02/11/2010	New example project
*A	3174860	KAKR	02/16/2011	Updated title and overview. Added hardware, software, and prerequisites sections
*B	3657628	GAYA	06/27/2012	CE to AN Conversion BANK field was left unused: Fixed that. CLEAR button added Updated CyUSB.sys to the latest version.
*C	3902230	GAYA	02/12/2013	Sunset review. No changes.
*D	4189943	RSKV	11/12/2013	Obsolete document.

OBSOLETE

Worldwide Sales and Design Support

Cypress maintains a worldwide network of offices, solution centers, manufacturer's representatives, and distributors. To find the office closest to you, visit us at Cypress Locations.

Products

Automotive	cypress.com/go/automotive
Clocks & Buffers	cypress.com/go/clocks
Interface	cypress.com/go/interface
Lighting & Power Control	cypress.com/go/powerpsoc cypress.com/go/plc
Memory	cypress.com/go/memory
PSoC	cypress.com/go/psoc
Touch Sensing	cypress.com/go/touch
USB Controllers	cypress.com/go/usb
Wireless/RF	cypress.com/go/wireless

PSoC® Solutions

psoc.cypress.com/solutions

PSoC 1 | PSoC 3 | PSoC 5LP

Cypress Developer Community

Community | Forums | Blogs | Video | Training

Technical Support

cypress.com/go/support

OBSOLETE

All other trademarks or registered trademarks referenced herein are the property of their respective owners.

Cypress Semiconductor
198 Champion Court
San Jose, CA 95134-1709

Phone : 408-943-2600
Fax : 408-943-4730
Website : www.cypress.com

© Cypress Semiconductor Corporation, 2012-2013. The information contained herein is subject to change without notice. Cypress Semiconductor Corporation assumes no responsibility for the use of any circuitry other than circuitry embodied in a Cypress product. Nor does it convey or imply any license under patent or other rights. Cypress products are not warranted nor intended to be used for medical, life support, life saving, critical control or safety applications, unless pursuant to an express written agreement with Cypress. Furthermore, Cypress does not authorize its products for use as critical components in life-support systems where a malfunction or failure may reasonably be expected to result in significant injury to the user. The inclusion of Cypress products in life-support systems application implies that the manufacturer assumes all risk of such use and in doing so indemnifies Cypress against all charges.

This Source Code (software and/or firmware) is owned by Cypress Semiconductor Corporation (Cypress) and is protected by and subject to worldwide patent protection (United States and foreign), United States copyright laws and international treaty provisions. Cypress hereby grants to licensee a personal, non-exclusive, non-transferable license to copy, use, modify, create derivative works of, and compile the Cypress Source Code and derivative works for the sole purpose of creating custom software and or firmware in support of licensee product to be used only in conjunction with a Cypress integrated circuit as specified in the applicable agreement. Any reproduction, modification, translation, compilation, or representation of this Source Code except as specified above is prohibited without the express written permission of Cypress.

Disclaimer: CYPRESS MAKES NO WARRANTY OF ANY KIND, EXPRESS OR IMPLIED, WITH REGARD TO THIS MATERIAL, INCLUDING, BUT NOT LIMITED TO, THE IMPLIED WARRANTIES OF MERCHANTABILITY AND FITNESS FOR A PARTICULAR PURPOSE. Cypress reserves the right to make changes without further notice to the materials described herein. Cypress does not assume any liability arising out of the application or use of any product or circuit described herein. Cypress does not authorize its products for use as critical components in life-support systems where a malfunction or failure may reasonably be expected to result in significant injury to the user. The inclusion of Cypress' product in a life-support systems application implies that the manufacturer assumes all risk of such use and in doing so indemnifies Cypress against all charges.

Use may be limited by and subject to the applicable Cypress software license agreement.